Patent Work
Integral Safety Locking Mechanism
of Bolt Action Rifle

PR 0001

ET50179

WOMBLE CARLYLE SANDRIDGE & RICE PLLC

ADDITIONAL REFERENCES FOR PATENTABILITY SEARCH REPORT FOR INTEGRAL SAFETY LOCKING MECHANISM OF BOLT ACTION RIFLE

(R087 9220; 27584.0231.5)

PR 0002

ET50180

TABLE OF CONTENTS

Patent Number	Inventor	Issue Date
1. 2,000,858	Maxwell	May 7, 1935
2. 2,225,583	Blizard	December 17, 1940
3. 2,458,616	Maynor	January 11, 1949
4. 2,599,132	Sass	June 3, 1952
5. 2,664,658	T. Bjorklund	January 5, 1954
6. 2,675,638	Crittendon	April 20, 1954
7. 2,856,718	Fischer	October 21, 1958
8. 3,462,869	Wallace	August 26, 1969
9. 3,526,332	Adelberger	September 1, 1970
10. 3,882,622	Perlotto	May 13, 1975
11. 4,133,128	Brush	January 9, 1979
12. 4,528,765	Johnson	July 16, 1985
13. 4,603,498	Johnson	August 5, 1986
14. 4,709,496	Johnson	December 1, 1987
15. 4,719,713	Hagle	January 19, 1968
16. 4,726,136	Dornaus et al	February 23, 1988
17. 4,754,568	Brandt	July 5, 1988
18. 5,068,990	Marzocco	December 3, 1991
19. DE 43 03 333-A1	Hans Schreiber	May 2, 1993
20. DE 43 03 33 A1	Hans Schreiber	June 30, 1994
21. 5,417,001	Rousseau	May 23, 1995
22. 5,671,560	Meller	September 30, 1997
23. 5,867,928	Plebani	February 9, 1999
24. 5,910,003	Kleinpaul	June 8, 1999
25. 6,141,896	Oberst	November 7, 2000
26. 6,240,670 B1	Findlay	June 5, 2001
27. 6,256,917 B1	Findlay	July 10, 2001

Fig. 6.

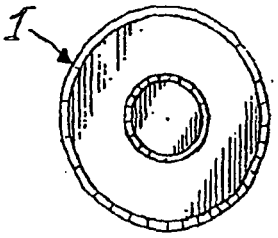

Fig. 7.

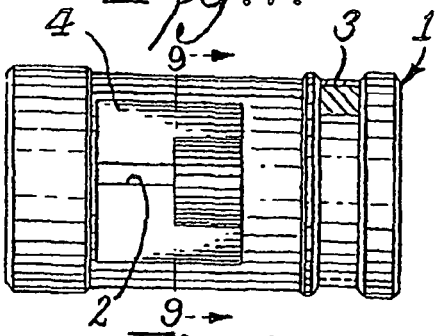

Fig. 9.

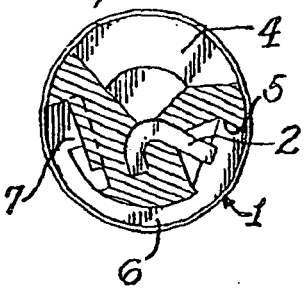

Fig. 8.

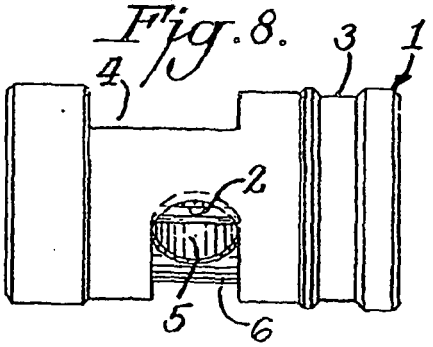

Fig. 10.

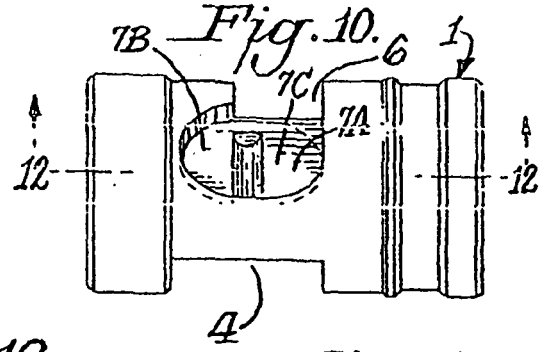

Fig. 12.

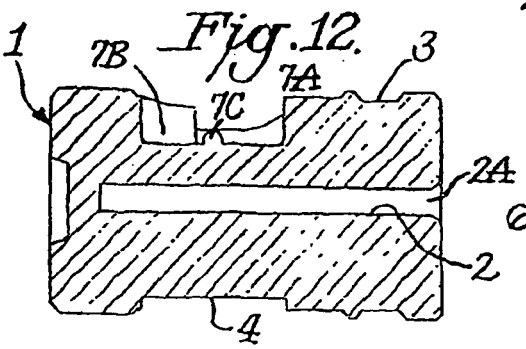

Fig. 11.

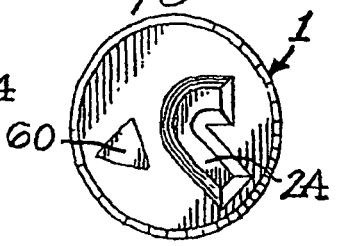

PR 0005

ET50183

Fig. 13.

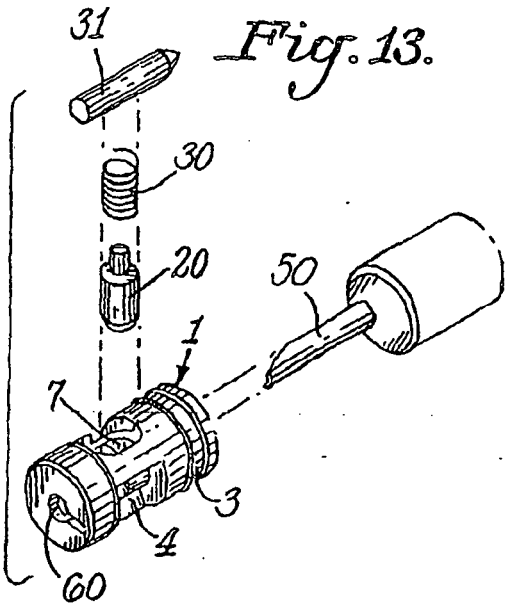

Fig. 14.

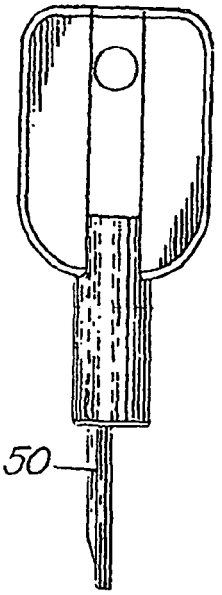

Fig. 17.

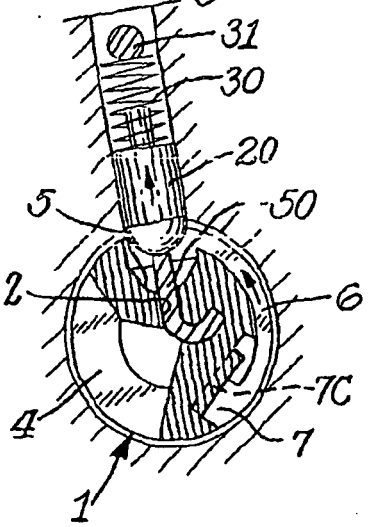

Fig. 15.

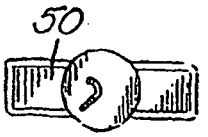

Fig. 16.

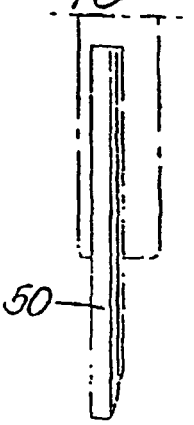

PR 0006

ET50184

LOCKABLE SAFETY FOR FIREARMS

BACKGROUND OF THE INVENTION

This invention relates generally to safety mechanisms for use in firearms and more particularly to a lockable safety mechanism able to prevent firing when in the safety mode and to prevent unauthorized use of the firearm when in the locked mode. There is a continued need for a device that is easy to use yet effectively deters unauthorized use of the firearm, and a particular need for a device that operates in a manner that is similar to previous safety mechanisms, yet also provides a locking function.

SUMMARY OF THE INVENTION

The present invention provides safety mechanisms that also provide a locking function, thus satisfying the need for a means of deterring unauthorized use of the firearm.

Specifically, one embodiment of the present invention provides a safety mechanism for use in a firearm comprising:

A. a safety button having a first end and a second end and comprising:

i. a locking aperture formed along a substantially longitudinal axis of the button comprising a female receiving end formed in the first end of the button;

ii. a receiving notch formed in the surface of the button between the first and second ends of the button;

iii. a plunger aperture formed in the surface of the button between the first and second ends of the button, extending substantially transverse to the longitudinal axis of the button toward the central axis of the button and connecting with the substantially longitudinal locking aperture, the plunger aperture being operatively connected to:

iv. a substantially transverse plunger channel, operatively connected to:

v. a first portion of a substantially longitudinal plunger channel, the substantially longitudinal plunger channel comprising the first portion and an operatively connected second portion, each portion being separated by a detent surface;

B. a detent plunger;

C. means to bias the detent plunger towards the safety button and into a position where the detent plunger interacts with one of the plunger aperture, the substantially longitudinal plunger channel and the substantially transverse plunger channel; and

D. locking means adapted for insertion into the female receiving end of the locking aperture of the safety button, wherein the locking means is adapted to interact with the plunger aperture when inserted into the female receiving end.

In another embodiment of the present invention there is provided a safety mechanism for use in a firearm comprising:

A. a safety button having a first end and a second end and comprising:

i. a locking aperture formed along a substantially longitudinal axis of the button comprising a female receiving end formed in the first end of the button;

ii. a receiving notch formed in the surface of the button between the first and second ends of the button;

iii. a plunger aperture formed in the surface of the button between the first and second ends of the button, extending substantially transverse to the longitudinal axis of the button toward the central axis of the button and connecting with the substantially longitudinal locking aperture, the plunger aperture being operatively connected to:

iv. a plunger channel; and

B. a detent plunger;

C. a spring positioned to bias the detent plunger towards the safety button and into a position where the detent plunger interacts with one of the plunger aperture, substantially longitudinal plunger channel and substantially transverse plunger channel; and

D. a key adapted for insertion into the female receiving end of the locking aperture of the safety button, wherein the key is adapted to interact with the plunger aperture when inserted into the female receiving end.

In a further embodiment of the present invention there is provided a safety mechanism for use in a firearm comprising:

a safety button transversely movable between a safe and a fire position and rotatable between the safe position and a safe and locked position;

a detent plunger adapted to lock the safety button in the safe and locked position and to prevent further movement of the safety button; and

a key adapted to be received through a key hole formed in the safety button, the key being adapted to engage the detent plunger for moving said detent plunger out of engagement with said safety button to enable rotation of the safety button from the safe and locked position to the safe position.

Yet another embodiment of the invention provides a safety mechanism for a firearm comprising:

a safety button transversely movable between a safe to restrict operation of the firearm and a fire position and rotatable between the safe position and the safe and locked position, and including first and second ends and a locking aperture formed through the safety button, and

a detent plunger adapted to engage the safety button as the safety button is moved to its safe and locked position to restrict further rotation of the safety button and maintain the safety button in its safe and locked position to prevent rotation of the safety button from the safe and locked position to the safe position.

BRIEF DESCRIPTION OF THE DRAWINGS

FIG. 1 is a fragmented side elevational view of a firearm having a safety mechanism of the present invention, with the safety mechanism in the fire 10 position.

FIG. 2 is a bottom plan view of the firearm of FIG. 1.

FIG. 3 is a fragmented side elevational view of the safety mechanism of FIG. 1, with the safety mechanism in the safe and locked position.

FIG. 4 is an isometric view of a safety button of the first embodiment of the safety mechanism of the present invention.

FIG. 5 is a bottom plan view of the safety button shown in FIG. 2, showing the position of the detent plunger, in phantom outline, when the safety button is in the fire position shown in FIG. 1.

FIG. 6 is a left end elevational view of the safety button of FIGS. 4 and 5.

FIG. 7 is a bottom plan view of the safety button of FIG. 4, showing the receiving notch.

FIG. 8 is a right side elevational view of the safety button of FIGS. 4 through 7.

FIG. 9 is a cross sectional view in elevation taken along line 9—9 of FIG. 7.

FIG. 10 is a left side elevational view of the safety button of FIGS. 4 through 7.

FIG. 11 is a right end elevational view of the safety button of FIGS. 4 through 7.

FIG. 12 is a cross sectional view taken along line 12—12 of FIG. 10.

FIG. 13 is an exploded view of a second embodiment of a safety mechanism of the present invention, showing the main elements of the preferred safety mechanisms of the present invention.

FIG. 14 is a front elevational view of a locking means, or key, of the present invention.

FIG. 15 is a plan view of FIG. 14.

FIG. 16 is a fragmental rear elevational view of FIGS. 14–15.

FIG. 17 is a fragmented side elevational view of the safety mechanism of FIGS. 4–7 and FIG. 13, showing the safety button in cross section.

DETAILED DESCRIPTION OF THE INVENTION

The present invention will be more fully understood by reference to the drawings, which show one preferred embodiment of a lockable safety mechanism of the present invention. Variations and modifications of this embodiment can be substituted without departing from the principles of the invention, as will be evident to those skilled in the art.

The preferred embodiment of the safety mechanism shown in the Figures are pictured in a firearm having a trigger mechanism or fire control of the general type disclosed in U.S. Pat. No. 2,675,638 to Crittendon. The Crittendon fire control can be used in a wide variety of firearms, including various shotguns and rifles commercially available from the Remington Arms Company, Inc. As will be evident to those skilled in the art, the present invention can be used in firearms having other types of trigger mechanisms, and can be used in many types of firearms, including handguns, shotguns or rifles. In the following description of possible embodiments of the invention trigger mechanism refers to a trigger, trigger assembly, fire control or any other device or combination of devices that are designed to be activated by an operator to mechanically fire the firearm.

In addition to being adaptable for use in a wide variety of firearms, the various embodiments of the lockable safety mechanism of the present invention can be located in various positions in the firearm with respect to the trigger mechanism. The particular location of the various safety mechanisms of the present invention will vary depending on the type of firearm, the type of trigger mechanism, and other considerations that will be evident to those skilled in the art. Aesthetics can also be considered in determining where to locate the safety mechanism. As shown in the Figures, the safety mechanism can be placed behind the trigger. Other embodiments of the present invention include locating the safety mechanism in front of and above the trigger, where it can be positioned to block the movement of a component of the trigger mechanism, rather than the trigger itself. In such an alternate position, the safety mechanism can also be positioned to block the movement of a forward end of the trigger itself, rather than blocking the rear end as shown in the Figures.

Accordingly, various embodiments of the lockable safety mechanisms of the present invention can be incorporated into almost any firearm, in almost any location or position within the firearm. Furthermore, the present invention can be positioned to block the movement of any part of a fire control, so long as such blockage would satisfy accepted safety measures and standards.

The wide applicability of the present invention will be more evident to those skilled in the art as a result of the disclosure of the general operating principles of the preferred embodiments of the present invention, as well as the disclosure of the preferred embodiments of the invention shown in FIGS. 1–17. In FIGS. 1–17, the embodiments of the lockable safety mechanism of the present invention are shown in firearms adapted for use by right handed operators, however, the invention is equally applicable to firearms adapted for left handed operators.

The function of the various safety mechanisms of the present invention can be described in general terms that are applicable to a wide variety of embodiments thereof, including those shown in the Figures and discussed in detail below, as will be apparent to those skilled in the art.

The safety mechanisms of the present invention are moveable between two transverse positions, the first being the safe position wherein the safety button prevents movement of the trigger mechanism and thus prevents the trigger from being pulled, and the second being the fire position wherein the safety button is positioned to allow movement of the trigger mechanism. The safety mechanisms of the present invention are also moveable between two rotational positions, the first rotational position being the first transverse or safe position, and the second rotational position being the safe and locked position. Once in the safe and locked rotational position, the safety mechanism cannot be rotated or moved without a key or locking means.

As shown in the Figures, the safety mechanisms of the present invention comprise four basic elements. These elements are best shown in FIG. 13, which is an exploded view of the main elements of the preferred safety mechanisms shown herein. The preferred embodiment of a lockable safety mechanism of the present invention comprises a safety button 1, a detent plunger 20, and a plunger spring 30 to bias the detent plunger toward the safety button. Other means to bias or urge the detent plunger toward the safety button can be substituted for the spring. Also shown in FIG. 13 is a pin 31 to secure the plunger spring in place. A key 50 shown in FIG. 13 and in phantom outline in FIG. 2 is the preferred locking means, however, other known locking means can be substituted therefor.

As shown in FIGS. 1–3, the safety button 1 is positioned within the trigger guard 40 of the firearm, behind the trigger 41, and the detent plunger 20 is mounted within the trigger guard above the safety button, where it is biased downward towards the safety button by the spring 30, which is also mounted within the trigger guard and secured in place by the pin 31.

As shown in FIGS. 4–12, the preferred safety button 1 is substantially cylindrical and comprises a locking aperture 2 formed along the longitudinal axis of the button, which is clearly shown in the cross sectional view of the button in FIG. 12. The locking aperture 2 comprises a female receiving end 2A formed in one end of the safety button. The female receiving end of the locking aperture can be formed in either end of the safety button, and the location of the receiving end will be determined by the configuration of the firearm and other considerations such as whether the firearm is adapted for use by a left handed or right handed operator.

PR 0008

ET50186

A receiving notch 4 is formed in the safety button between the two ends of the button, as best shown in FIG. 7. The notch is adapted to receive a portion of the trigger mechanism or part of the fire control, and to thereby allow movement of the trigger mechanism or fire control. The position of this notch will be determined by the position of the safety button in the firearm and the part of the fire control or trigger mechanism that is to be blocked. In the present embodiment of the button, the notch is formed in an offset but substantially central portion of the button, between the two ends of the button, and is positioned to allow the trigger to be pulled when the button is in the fire position, as shown in FIG. 1. When the button is in the second transverse or fire position, the notch is positioned behind the trigger in a position to interact with the tab 42 on the rear of the trigger, allowing the trigger to pivot as it is pulled.

When the safety button is in the first transverse or safe position, the notch is no longer aligned with the trigger, and thus rearward movement of the trigger is blocked by the button, as shown in FIG. 3.

A plunger aperture 5 is formed in the surface of the safety button between the two ends of the button, as best seen in FIG. 8. The plunger aperture 5 extends substantially transversely to the longitudinal axis of the button towards its central axis, where it connects with the locking aperture 2. The plunger aperture is adapted for interaction with the detent plunger 20. More specifically, the plunger aperture is adapted for insertion of the detent plunger to lock the safety button in the safe and locked position. As shown in FIG. 3, the detent plunger 20 is urged into the plunger aperture 5 by the spring 30 when the safety button has been rotated to the safe and locked position. When the safety button is in the safe and locked position, the notch 4 is no longer aligned with the trigger mechanism, and the button thus blocks the trigger. When in the safe and locked position, further rotational movement is prevented by the interaction of the detent plunger and the plunger aperture, which also prevents transverse movement. As shown in FIG. 17, the detent plunger 20 is urged out of the plunger aperture 5 by the key 50 when it has been inserted into the locking aperture. With the key inserted and urging the detent plunger away from the button, acting against the spring 30, the safety button can be rotated from the safe and locked to the safe position. The rotational movement of the safety button is limited and guided by the interaction of the detent plunger with the plunger channels, as described below. Similarly, the transverse movement of the safety button is limited and guided by the interaction of the detent plunger with the plunger channels.

The plunger aperture 5 is operatively connected to a substantially transverse plunger channel 6, as best shown in FIGS. 4 and 8. The transverse plunger channel is substantially transverse to the longitudinal axis of the button, and is adapted to interact with the detent plunger. The interaction of the detent plunger 20 with the transverse plunger channel 6 defines and limits the rotational movement of the safety button.

The transverse plunger channel 6 is operatively connected to the longitudinal plunger channel 7 at a first portion 7A thereof, as best shown in FIGS. 4, 5, 8 and 10. The longitudinal plunger channel 7 further comprises a second portion 7B. A detent surface 7C is formed in the longitudinal plunger channel 7 between the first and second portion thereof The interaction of the detent plunger 20 with the longitudinal plunger channel 7 defines and limits the transverse movement of the safety button. When the detent plunger 20 is positioned in the second portion 7B of the longitudinal plunger channel, the safety button is in the fire position. When the detent plunger 20 is in the first portion 7A of the longitudinal plunger channel, the safety button is in the safe position, from which it can be rotated to the safe and locked position. The detent surface 7C urges the detent plunger 20 into either portion of the longitudinal plunger channel and positively retains the plunger in such position.

The safety button is shown in FIG. 1 in the fire position, where the receiving notch 4 is aligned with a portion of the trigger and positioned to allow the trigger to pivot when pulled. If the safety button is pushed in along the line shown in FIG. 2, the receiving notch 4 will no longer be aligned with the trigger mechanism, and the movement of the trigger will be blocked by the outer diameter of the safety button, adjacent to the notch.

As shown in FIGS. 1–3, and especially FIG. 2, the various embodiments of the safety mechanisms of the present invention are moveable between two transverse and two rotational positions. As shown in FIG. 3, the safety button is in the safe and locked position, wherein the detent plunger interacts with and enters the plunger aperture. As shown in FIG. 1, the safety button is in the fire position, wherein the notch is aligned with a portion of the trigger mechanism and the detent plunger interacts with the second portion 7B of the longitudinal plunger channel

The safety mechanisms of the present invention are configured to allow for rotational movement as well as transverse movement of the safety button, as described above. Only when the present safety button is in the first transverse position can it be rotated among a first and second rotational position. The first rotational position, wherein the detent plunger interacts with the first portion of the longitudinal plunger channel, also corresponds to the safe position described above. The second rotational position, wherein the detent plunger interacts with and enters the plunger aperture, is the safe and locked position. The safety button can be rotated between the two rotational positions as guided by the interaction of the detent plunger and the transverse plunger channel.

When the detent plunger is in the first portion of the longitudinal channel, the firearm is in the safe position, and the rotational movement of the safety button is possible, and when the detent plunger is in the second portion of the longitudinal channel, the firearm is in the ready to fire position, and rotational movement of the safety button is not possible.

When the detent plunger is in the plunger aperture, the safety mechanism is in the safe and locked position, wherein a portion of the plunger extends through the plunger aperture and into the locking aperture. When the detent plunger is in the plunger aperture, the safety button is in the second rotational position, and the trigger assembly of the firearm is locked in the safe position and cannot be activated. In this position, the safety button cannot be rotated to the first rotational position until the locking means is inserted into the locking aperture to a position where the locking means contacts the detent plunger and urges it away from the safety button, thus removing the detent plunger from within the plunger aperture and allowing the safety button to be rotated so that the detent plunger interacts with the transverse plunger channel as the safety button rotates.

The location of the safety button with respect to the firearm shown in the embodiment of the present invention illustrated in the Figures is preferred because of its accessibility, visibility, and similarity to the position of previous safety mechanisms in firearms having a similar fire control. This location is also preferred for aesthetic reasons

and for allowing efficient production of firearms because it does not require the modification of other components of the firearm to accommodate the present safety mechanism. The position of the safety mechanism can be varied, as will be evident to those skilled in the art. For example, the safety button can be placed in front of the trigger in a position above the pivot point of the trigger, thus blocking forward motion of the top of the trigger and preventing the trigger from being pulled rearward by anyone attempting to fire the firearm. Such locating of a safety mechanism of the present invention, however, may require relocating or redesigning of the fire control and any part thereof that is linked to the trigger.

As shown in the Figures, the preferred safety button 1 of the present invention is substantially cylindrical in shape. A substantially cylindrical shape is preferred for aesthetic reasons and for ease in incorporating the present invention into various types of firearms already adapted for use with traditional cylindrical safety bolts, however, other shapes and configurations are within the scope of the present invention and will be evident to those skilled in the art, depending on the overall configuration of the firearm for which the present lockable safety mechanism will be used.

As shown in the Figures, preferred embodiments of the safety button further comprises a transverse position indicator 3, which in the preferred embodiment consists of a radial band at one end of the button, typically painted red. The red radial band that forms the preferred transverse position indicator is positioned so that it is visible to the operator of the firearm when the safety button is in a first transverse position, preferably the fire position where the safety button does not prevent the trigger from moving.

In preferred embodiments of the safety mechanism of the present invention, the safety button further comprises a rotational position indicator 60, shown in FIGS. 4 and 11. An alternate embodiment of the rotational position indicator 60 is shown in FIG. 13, on the opposite side of the button as the embodiment shown in FIGS. 4 and 11. The embodiment shown in FIGS. 4 and 11 is particularly preferred, as it can be viewed by an operator as the operator inserts the key and rotates the button. The rotational position indicator can be viewed by an operator of the firearm to determine whether or not the firearm is in the safe and locked position.

Embodiments of the key 50, shown in FIGS. 14–16, show one preferred locking means adapted for insertion into the female receiving end of the locking aperture. Other locking means can include a wire or rod and a blade. Although a wide variety of locking means can be used, a key is preferred. The key is adapted for insertion into the locking aperture, extending a sufficient distance into the aperture so as to be positioned to interact with the detent plunger 20 when the detent plunger is positioned within the plunger aperture. The preferred key has a beveled tip, as shown in FIGS. 13, 14 and 16. The beveled tip is adapted to interact with the detent plunger as the key is fully inserted into the locking aperture, urging the plunger away from the safety button and out of the plunger aperture and allowing the safety button to be rotated out of the safe and locked position to the safe position.

The key can comprise a variety of handles, as shown in the Figures, including the flat handle shown in FIGS. 14–16 and the cylindrical handle shown in FIG. 13.

It is preferred that the key have high torsional strength, so that it have a thin cross section and to make the key difficult to copy. A thin key will also deter the use of paper clips and other readily available articles from being used to "pick" the safety mechanism. Many known means of imparting torsional strength can be used, including selecting a suitable material. In addition, the key can be configured to increase its torsional strength. For example, the key can be formed from a piece of metal which has been bent, the bend providing rigidity and torsional strength. As shown in the Figures, preferred keys can have a "J" shaped cross section, showing one possible way of providing a key having high torsional strength. Other cross sectional configurations will also impart torsional strength to the key, as will be evident to those skilled in the art.

The various embodiments of the safety mechanism of the present invention are adaptable with minor modifications to a wide variety of firearms, including those having manually operated, gas operated, and recoil operated actions, and including rifles, shotguns, and handguns.

I claim:

1. A safety mechanism for use in a firearm comprising:

A. a substantially cylindrical safety button having a first end and a second end and comprising:

i. a locking aperture formed along a substantially longitudinal axis of the button comprising a female receiving end formed in the first end of the button;

ii. a receiving notch formed in the surface of the button between the first and second ends of the button;

iii. a plunger aperture formed in the surface of the button between the first and second ends of the button, extending substantially transverse to the longitudinal axis of the button toward the central axis of the button and connecting with the substantially longitudinal locking aperture, the plunger aperture being operatively connected to:

iv. a substantially transverse plunger channel, operatively connected to:

v. a first portion of a substantially longitudinal plunger channel, the substantially longitudinal plunger channel comprising the first portion and an operatively connected second portion, each portion being separated by a detent surface;

vi. a rotational position indicator formed on one end of the safety button

B. a detent plunger;

C. means to bias the detent plunger towards the safety button and into a position where the detent plunger interacts with one of the plunger aperture, the substantially longitudinal plunger channel and the substantially transverse plunger channel; and

D. locking means adapted for insertion into the female receiving end of the locking aperture of the safety button, wherein the locking means is adapted to interact with the plunger aperture when inserted into the female receiving end.

2. A safety mechanism of claim 1 wherein the rotational position indicator is formed on an end opposite the female receiving end.

3. A safety mechanism of claim 1 wherein the locking means is a key.

4. A safety mechanism of claim 3 wherein the key has a substantially "J" shaped cross section.

5. A safety mechanism of claim 3 wherein the key has a beveled tip adapted to urge the detent plunger away from the safety button when the key is inserted into the locking aperture.

6. A safety mechanism of claim 1 wherein the locking means is adapted to interact with the plunger aperture only when the locking means is fully inserted into the female receiving end.

PR 0010

ET50188

Dec. 17, 1940. C. E. BLIZARD 2,225,583

SAFETY DEVICE FOR THE FIRING MECHANISMS OF FIREARMS

Filed Jan. 31, 1940 2 Sheets-Sheet 1

Fig. 1.

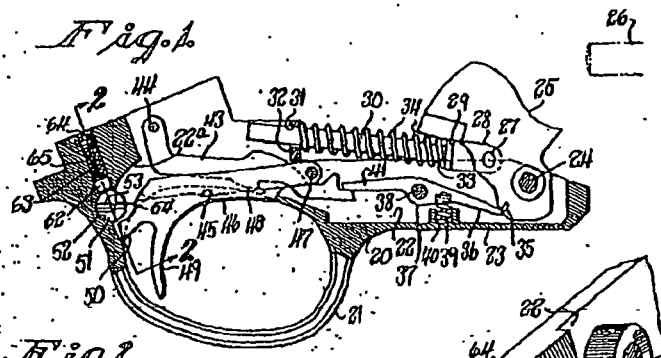

Fig. 2.

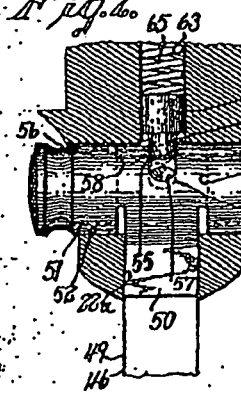

Fig. 3.

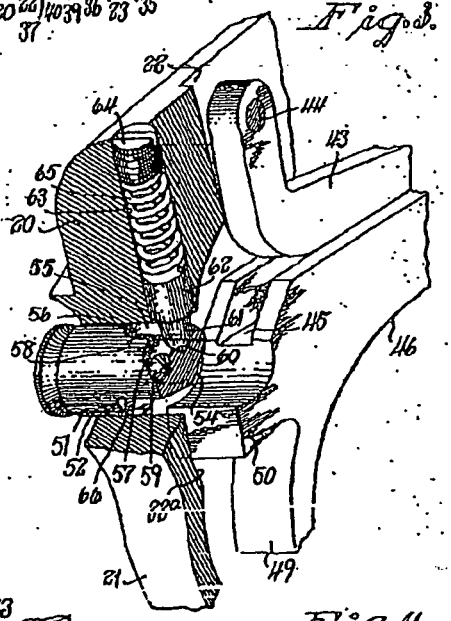

Fig. 5.

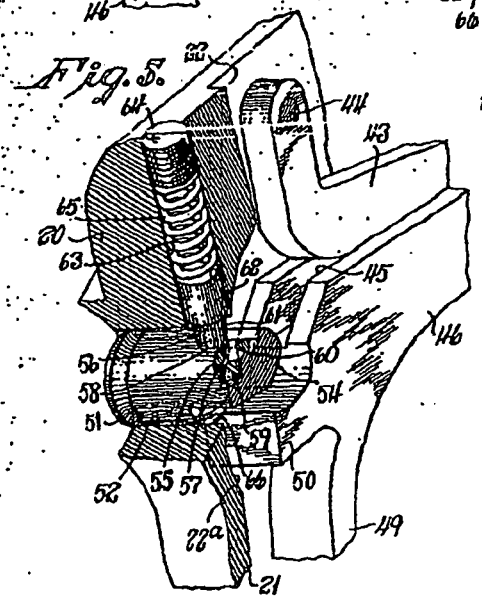

Fig. 4.

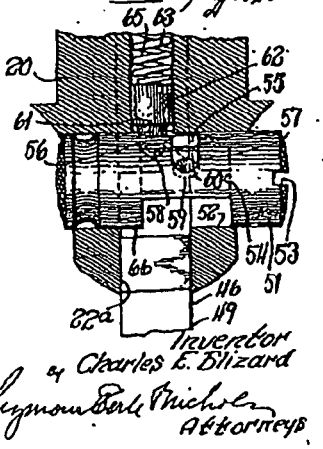

Inventor
Charles E. Blizard
by Raymond Berk Nichols
Attorneys

PR 0012

ET50190

Dec. 17, 1940. C. E. BLIZARD 2,225,583

SAFETY DEVICE FOR THE FIRING MECHANISMS OF FIREARMS

Filed Jan. 31, 1940 2 Sheets-Sheet 2

Fig. 7.

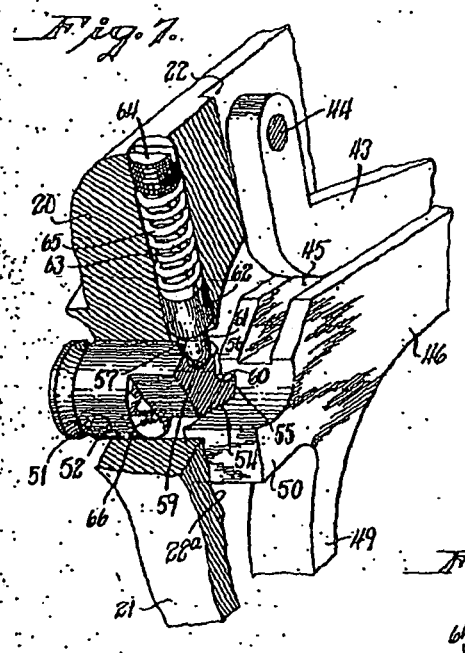

Fig. 6.

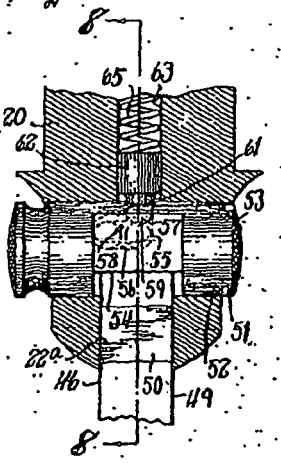

Fig. 8.

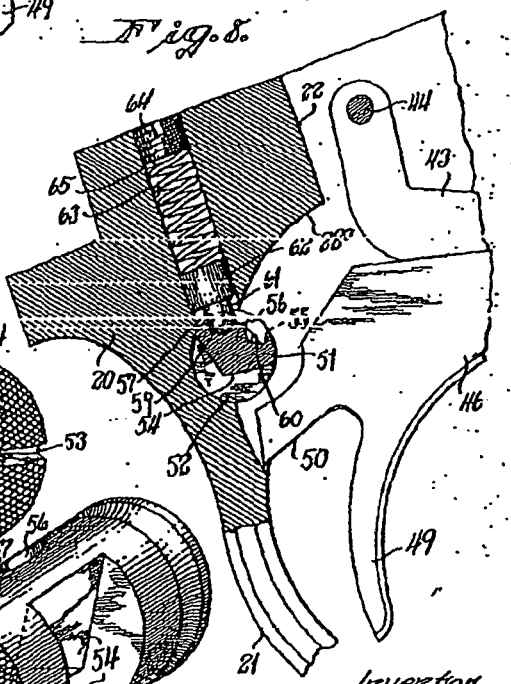

Fig. 9.

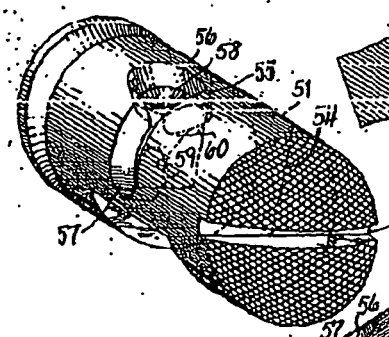

Fig. 10.

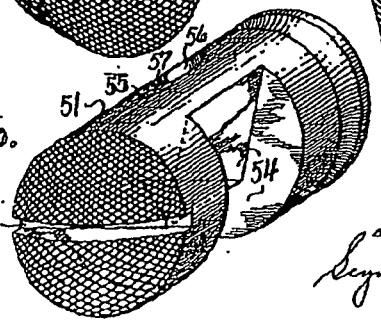

Inventor
Charles E. Blizard
by Seymour Paul Nichols
Attorney

PR 0013

ET50191

Dec. 17, 1940. C. E. BLIZARD 2,225,583

SAFETY DEVICE FOR THE FIRING MECHANISMS OF FIREARMS

Filed Jan. 31, 1940 2 Sheets-Sheet 2

Fig. 7.

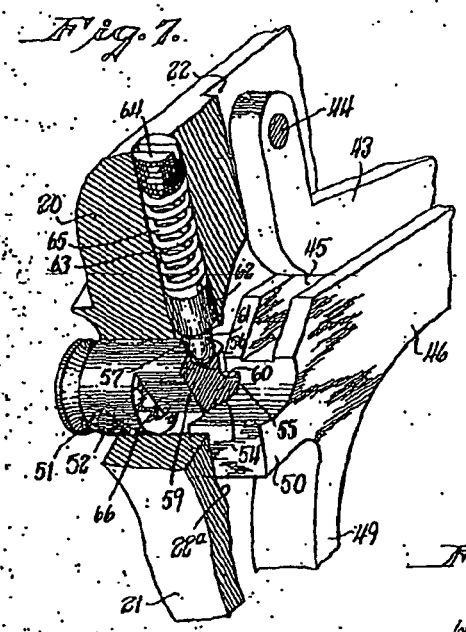

Fig. 6.

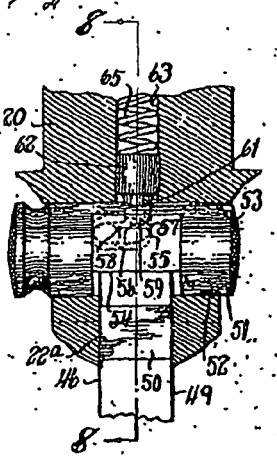

Fig. 8.

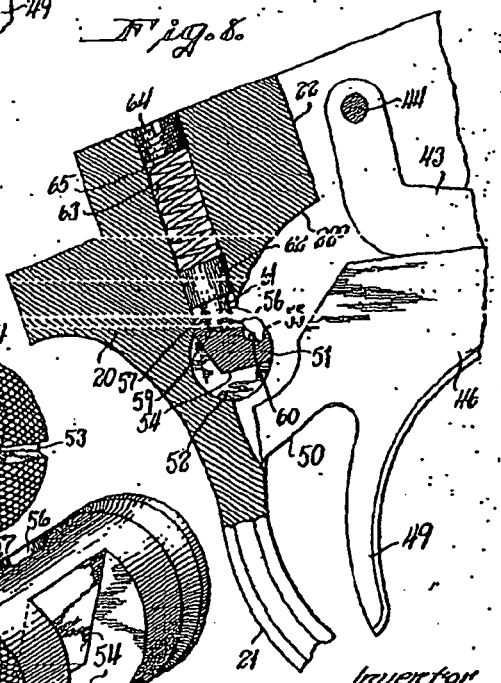

Fig. 9.

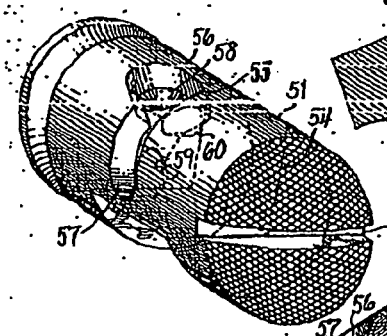

Fig. 10.

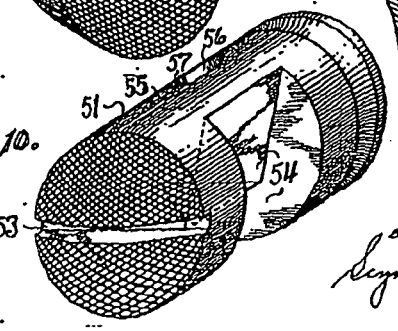

Inventor
Charles E. Blizard
by Seymour Rees Nichols
Attorneys

PR 0014

ET50192

May 7, 1935. W. R. MAXWELL 2,000,858

SAFETY DEVICE FOR FIREARMS

Filed July 5, 1933

Fig. 1.

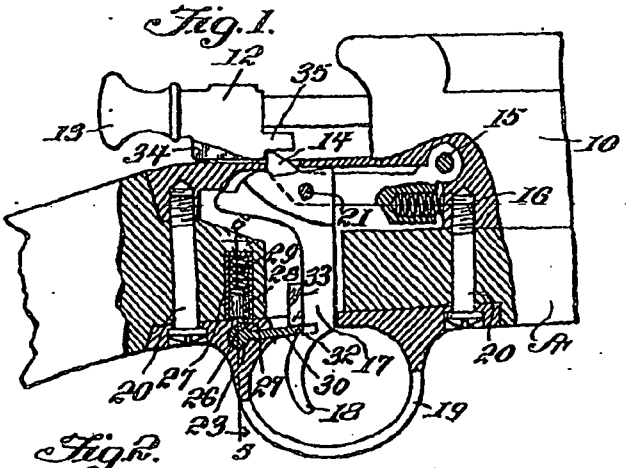

Fig. 2.

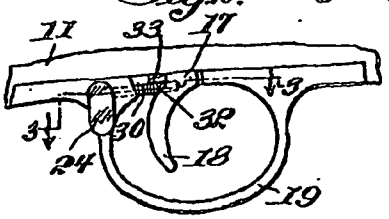

Fig. 3.

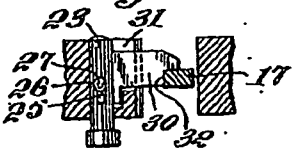

Fig. 4.

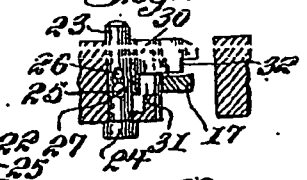

Fig. 6.

Fig. 5.

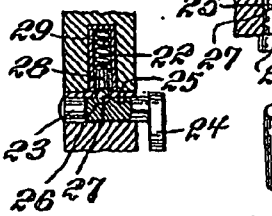

Fig. 7.

Fig. 8.

William Ray Maxwell

INVENTOR

BY Victor J. Evans & Co.

ATTORNEY

WITNESS J. T. Wright

PR 0015

ET50193

Patented May 7, 1935

2,000,858

UNITED STATES PATENT OFFICE

2,000,858

SAFETY DEVICE FOR FIREARMS

William Ray Maxwell, Hicksville, Ohio

Application July 5, 1933, Serial No. 679,107

1 Claim. (Cl. 42—70)

The invention relates to a safety device for firearms and more especially to a safety trigger lock.

The primary object of the invention is the provision of a device of this character, wherein the trigger of a firearm can be latched against action when the firing pin of the firearm is cocked, so as to avoid any possibility of the accidental working of the trigger for the firing of the firearm, the device being a safety contrivance for said firearm.

Another object of the invention is the provision of a device of this character, wherein the mounting thereof is rearwardly of the trigger of a firearm and fitted in the guard for said trigger so as to be in a convenient position for the manipulation of such device, the device being susceptible of travel or movement to a latching position with relation to the trigger so as to prevent movement thereof when the firing pin of the firearm is in firing position, the device being of novel form and readily and conveniently operated by the hand of the user of the firearm.

A further object of the invention is the provision of a device of this character, wherein by reason of its construction the same is handy, easily operated and safe, the device being particularly adaptable for firearms of bolt-action type.

A still further object of the invention is the provision of a device of this character, which is extremely simple in construction, thoroughly reliable and efficient in its purpose, readily and easily operated with dispatch, strong, durable, and inexpensive to manufacture and install.

With these and other objects in view, the invention consists in the features of construction, combination and arrangement of parts as will be hereinafter more fully described in detail, illustrated in the accompanying drawing, which discloses the preferred embodiment of the invention, and pointed out in the claim hereunto appended.

In the accompanying drawing:

Figure 1 is a fragmentary side elevation of a firearm, the same being partly in section to show the trigger, the sear and the firing bolt or breech pin, with the device constructed in accordance with the invention applied, the breech pin or firing bolt being shown cocked or in firing position.

Figure 2 is a fragmentary side elevation of the trigger guard, trigger and the device constituting the present invention in association therewith.

Figure 3 is a sectional view on the line 3—3 of Figure 2 looking in the direction of the arrows.

Figure 4 is a similar view showing the trigger released.

Figure 5 is a sectional view on the line 5—5 of Figure 1 looking in the direction of the arrows.

Figure 6 is a perspective view of the firing bolt wedge.

Figure 7 is a perspective view of a keeper block for the trigger.

Figure 8 is a perspective view partly in section of the latch receiving barrel of the device.

Similar reference characters indicate corresponding parts throughout the several views in the drawing.

Referring to the drawing in detail, A designates generally a portion of a firearm having the barrel 10 and stock 11, respectively. The firearm, in this instance, is of the bolt-action type and the bolt 12 is located at the breech end of the barrel 10 and is cocked by pulling upon a handle 13, so that this bolt will be engaged by the sear 14 pivoted at 15 in the stock 11. The sear 14 is urged into locking position through the medium of a spring 16. Pivotally connected with the sear is a trigger 17, the finger-engaging end 18 being within a guard 19 bolted or otherwise fastened at 20 to the said stock 11. The trigger 17 is pivoted at 21 to the sear, and on pulling upon the trigger 17 at its finger end 18 the sear 14 will be lowered and disengaged from the bolt 12 so that the latter will instantly act for the firing operation of the firearm.

Suitably fitted in the stock 11 rearwardly of the trigger 17 is a barrel 22 closed at its top and open at its bottom. Suitably fitted transversely in the guard 19 immediately below the barrel 22 is a sliding pin 23 having a finger abutment 24, the bolt being formed with keeper notches 25 and 26, respectively, these alternately receiving a retaining or latching ball 27, the same operated upon by a follower 28 sustained under tension by a coiled expansion spring 29, the latter and the follower being within the barrel 22. Thus when the ball engages either of the keeper notches 25 and 26 the pin 23 will be frictionally held in its shifted position transversely of the stock.

The pin 23 carries a safety bit 30 which operates in a suitable clearance 31 in the guard 19 and is provided in its free end with a notch forming a shoulder 32 for abutment by the trigger 17 when the pin 23 has been shifted to a position of safety for preventing the finger actuation of the trigger 17 at the finger-engaging end 18 thereof.

The trigger 17 has formed thereon a block 33 for overhanging the bit 30 of the pin 23 so that when the latter has been thrown to safety this bit will engage beneath the block 33 with the trigger 17 abutting the shoulder 32 provided by the

PR 0016

ET50194

notch in said bit 30 and thus be latched or locked against movement.

The bolt 12 at its underside next to the handle 13 has fitted therewith a wedge 34 so that when the bolt has been thrown to a firing position this wedge 36 will ride onto the sear 14 and thus prevent the pin 23 from being moved to safety until the said bolt has been pulled outwardly to cocking position. The ball 27, by alternate engagement in the notches 25 and 28, will frictionally hold the pin 23 in either safety-on or safety-off positions. The safety-on position of the pin 23 can only be attained when the bolt 12 has been cocked by the sear 14. The bolt 12, as is customary, is fitted in the breech end of the barrel 10 of the firearm and is manually cocked.

It is understood, of course, that the bolt 12 at the handle end thereof carries a firing pin or hammer 36, as is usual.

What is claimed is:

In a firearm, a stock, a barrel on the stock, a sear pivotally mounted in the stock, a firing bolt slidable with relation to the barrel and engaged by the sear for the locking of said bolt, a trigger pivoted to the sear and having a finger-engaging end projecting exteriorly of the stock, a trigger guard detachably fitting on the stock for the said trigger, a safety latch transversely of the said guard and rearwardly of the trigger and having a bit to engage the latter to hold the same latched when the firing bolt is cocked, means engageable with the safety latch to hold the same in latching or unlatching position with relation to the trigger, a wedge on the firing bolt and cooperating with the sear and a block on the trigger and cooperative with the wedge to prevent the latch being moved to safety unless the firing bolt is fully cocked.

WILLIAM RAY MAXWELL.

PR 0017

ET50195

Jan. 11, 1949. T. L. MAYNOR 2,458,616

TRIGGER SAFETY FOR SHOTGUNS AND THE LIKE

Filed June 13, 1945

Fig. 1.

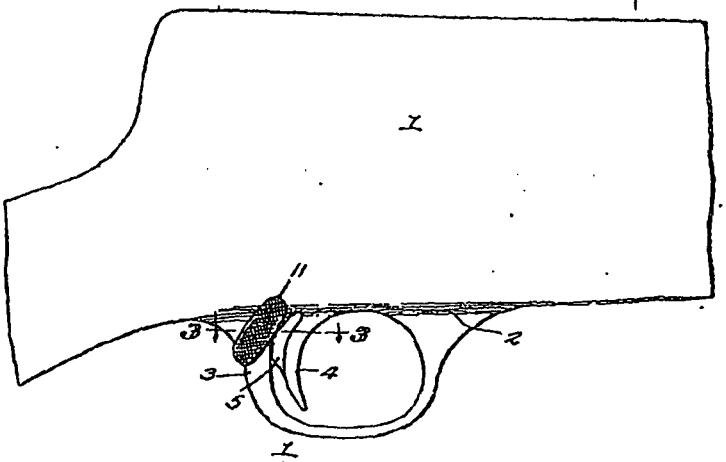

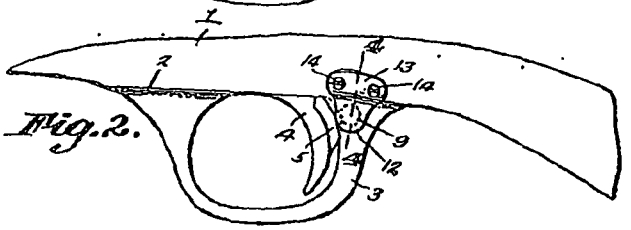

Fig. 2.

Fig. 3.

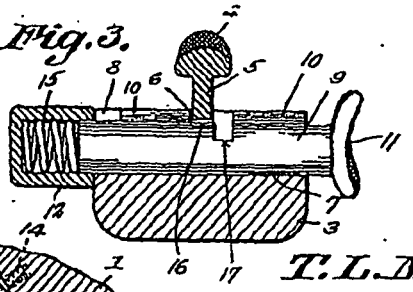

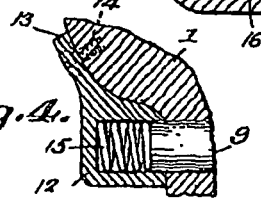

Fig. 4.

T. L. Maynor
INVENTOR.

BY Albright & Co.
ATTORNEYS.

PR 0019

ET50197

Patented Jan. 11, 1949

2,458,616

UNITED STATES PATENT OFFICE

2,458,616

TRIGGER SAFETY FOR SHOTGUNS AND THE LIKE

Tracy K. Maynor, Beckley, W. Va.

Application June 13, 1945, Serial No. 599,128

1 Claim. (Cl. 42—70)

1

This invention relates to safety pins for shotguns and other firearms of a similar type, one of the objects being to provide a safety pin of the cross-bolt type which will act automatically to hold the trigger against accidental retraction, the position and construction of this cross-bolt "safety" being such that it can be actuated by the same finger in contact with the trigger to be be pulled so that a slight transverse pressure exerted prior to or during the pull on the trigger will release said trigger for retraction.

Another object is to provide a locking pin which, when released, will automatically return to its initial position, thereby again locking the trigger against retraction until such time as the hand of the user shall be placed in position to pull the trigger whereupon said trigger can be unlocked and actuated without thought or effort.

A further object is to provide a locking pin which normally prevents unintentional actuation of the trigger.

With the foregoing and other objects in view which will appear as the description proceeds, the invention resides in certain novel details of construction and certain steps in the method hereinafter more fully described and pointed out in the claims, it being understood that changes may be made without departing from the spirit of the invention as claimed.

In the accompanying drawing the preferred form of the invention has been shown.

In said drawing,

Figure 1 is a side elevation of a portion of a firearm equipped with the present improvements.

Figure 2 is an elevation of a portion of a firearm viewed from the opposite ends.

Figure 3 is an enlarged section on the line 3—3, Fig. 1.

Figure 4 is an enlarged section through one side portion of the firearm taken on the line 4—4, Fig. 2.

Referring to the figures by characters of reference 1 designates a portion of the firearm to which is secured the usual trigger plate 2 having a trigger guard 3. The trigger 4 is mounted in the usual manner and is provided with the conventional lug or blade 5 extending backwardly therefrom into a slot 6 within the rear portion of the guard.

Formed within the rear portion of the guard is a transverse bore 7 provided with a keyway 8 that extends longitudinally of the bore and slot 6 is at right angles to and opens into this bore.

A cross-bolt or safety pin 9 is slidably mounted in the bore 7 and has a key 10 within keyway 8

2

whereby the cross-bolt or safety pin is held against rotation. One end of this cross-bolt or pin is enlarged to provide a finger rest 11 normally supported beyond that side of the trigger guard to be engaged by the finger actuating the trigger. If the trigger is to be operated by a finger on the right hand of the user the rest 11 will project from the right side of the trigger guard. Obviously, however, this cross-bolt or safety pin can be reversed in the bore 7 so that the finger rest 11 will be supported beyond the left side of the trigger guard, thereby adapting it for use by a person using the left hand when firing the gun.

A cap 12 houses that end of the cross-bolt or pin 9 remote from the finger rest 11 and can be secured in place on the guard 3 in any suitable manner. For example, and as shown in Fig. 4, the cap 12 can have an integral wing 13 held to the side of the gun by one or more screws 14 or the like. The cap contains a coiled spring 15 which exerts a constant pressure against the bolt or pin 9, thereby holding the cross bolt in one extreme position, with finger rest 11 normally spaced from the side of the guard.

The key 10 is cut away where is crosses the slot 6 to provide a seat 16 normally positioned across the inner edge of the lug or blade 5, as shown in Fig. 3, so that retraction of the trigger 4 is thus prevented. The engagement of the trigger blade with one end wall of the cutaway part (see Fig. 3) provides a stop limiting movement of the cross-bolt beyond the above-mentioned extreme or normal position. However, at one end of and communicating with the seat 16 there is formed a recess 17 which extends into the bolt or pin so that when bolt or pin 9 is shifted against the action of spring 15, this recess 17 is brought into register with the blade or lug 5 so that it then becomes possible to retract the trigger. Exact registry of the recess with the trigger results when the trigger engages the other end wall of the cutaway portion, which other end wall is flush with the recess wall (see Fig. 3).

In using a gun equipped with the present improvements a finger is applied to the trigger in the usual manner but, in order to reach the trigger, the finger must be extended across the finger rest 11. By using the finger to thrust against rest 11, the safety is released and said finger can then be used to retract the trigger and fire the gun. As soon as the finger is removed from the trigger and the rest 11 disengaged from the finger, the bolt or pin 9 will snap back into normal position so as to bring the seat 16 behind lug or blade 5. This

PR 0020

ET50198

results in relocking the trigger against retraction.

Importance is attached to the fact that the structure described enables the user to fire the gun without thought or effort in releasing the safety, and the further fact that the trigger is automatically locked without trusting to the memory of the user to relock it.

It is a fact well known to hunters that many shots at game have been lost through failure to release the safety in time, where the usual locks are employed. With the present structure, however, the locking and unlocking are practically automatic and quick shots can be made without thought of effecting a release.

What is claimed is:

In a firearm, the combination, with a trigger guard having a transverse bore, a keyway extending longitudinally of and communicating with the bore, and a slot at right angles to and opening into the bore and keyway, and with a trigger movably mounted in the slot, of a cross-bolt slidable in the bore, a key on the cross-bolt slidable in the keyway to prevent rotation of the cross-bolt, a spring engaging and yieldably urging the cross bolt in one direction to one extreme position, a finger rest on one end of the cross-bolt positioned relative to the trigger to receive thrust from a user's finger approximately simultaneously with depression of the trigger by said finger, for movement of the cross-bolt in the other direction to an opposite extreme position against the action of the spring, the key having a cutaway portion

to provide a seat receiving and preventing depression of the trigger when the cross-bolt is in the first-named position, the trigger when positioned in the seat engaging one end wall of the cutaway portion to provide a stop for preventing movement of the cross-bolt beyond the first-named extreme position, and said cross-bolt having a recess immediately adjacent and communicating with the seat to receive the trigger when the cross-bolt is moved to its second extreme position, to permit depression of the trigger, one end wall of the recess being flush with the other end wall of the cutaway portion to provide a stop engageable by the trigger to prevent movement of the cross-bolt beyond its second extreme position and to register the recess with the trigger as the trigger is depressed.

TRACY L. MAYNOR.

REFERENCES CITED

The following references are of record in the file of this patent:

UNITED STATES PATENTS

Number	Name	Date
170,988	Chillingworth	Dec. 14, 1875
1,732,115	Young	Oct. 15, 1929
2,000,858	Maxwell	May 7, 1935

FOREIGN PATENTS

Number	Country	Date
20,813	Germany	Jan. 25, 1883

PR 0021

ET50199

PR 0022

ET50200

June 3, 1952 E. W. SASS 2,599,132

LOCK FOR FIREARM TRIGGERS

Filed April 13, 1950

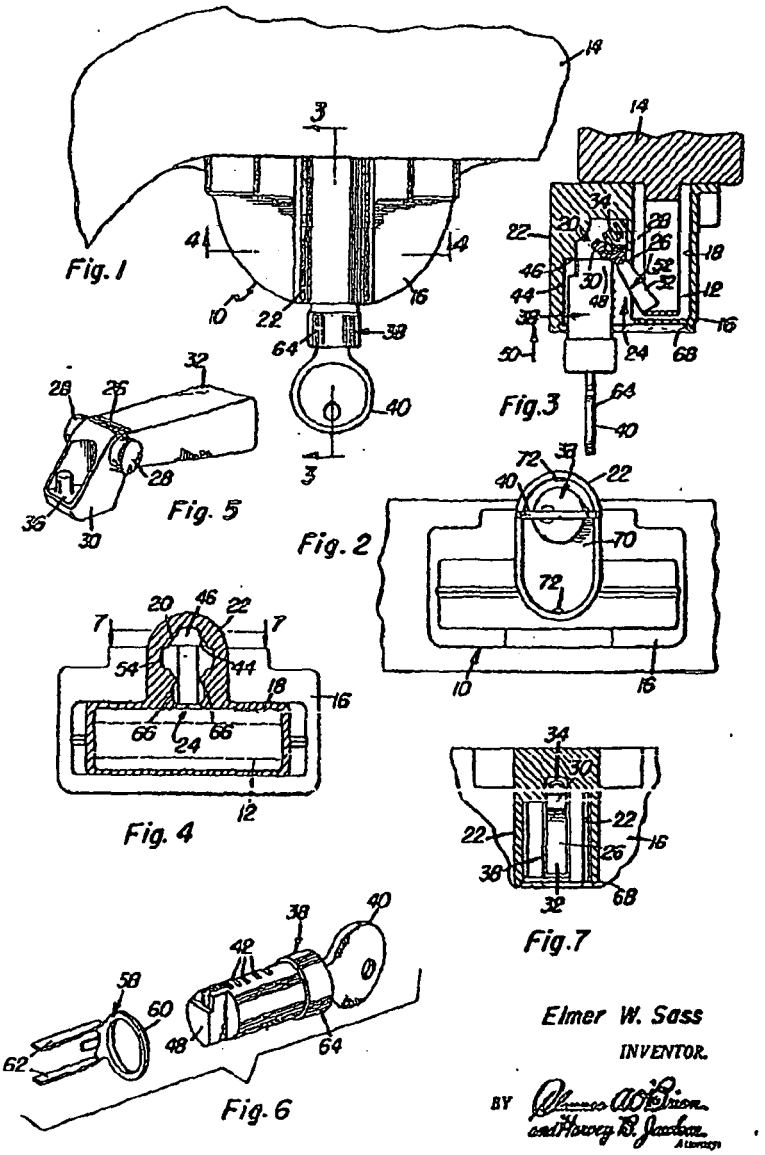

Elmer W. Sass

INVENTOR.

BY James A. O'Brien and Harvey B. Jacobson Attorneys

PR 0023

ET50201

Patented June 3, 1952 2,599,132

UNITED STATES PATENT OFFICE

2,599,122

LOCK FOR FIREARM TRIGGERS

Elmer W. Sass, Quincy, Ill.

Application April 18, 1950, Serial No. 155,769

2 Claims. (Cl. 42—70)

1

This invention relates to new and useful improvements and structural refinements in locking attachments for firearms, and the principal object of the invention is to prevent actuation of the trigger such as could cause the firearm to be accidentally or unintentionally discharged.

This object is achieved by the provision of the instant device which, in the nature of an attachment, may be applied to the trigger guard of the firearm and be locked in position thereon, so as to completely enclose the guard as well as the trigger therein and thereby render the trigger inaccessible.

Some of the advantages of the invention reside in its simplicity of construction, in its dependability, and in its adaptability for use on firearms of different sizes and types.

With the above more important objects and features in view and such other objects and features as may become apparent as this specification proceeds, the invention consists essentially of the arrangement and construction of parts as illustrated in the accompanying drawings, in which:

Figure 1 is a side elevational view of the invention applied to a firearm;

Figure 2 is an underside plan view thereof;

Figure 3 is a vertical sectional view, taken substantially in the plane of the line 3—3 in Figure 1;

Figure 4 is a horizontal sectional view, taken substantially in the plane of the line 4—4 in Figure 1 but with the lock mechanism removed;

Figure 5 is a perspective view of the locking member used in the invention;

Figure 6 is a group perspective view of the key actuated lock cylinder and retainer, and

Figure 7 is a fragmentary sectional detail, taken substantially in the plane of the line 7—7 in Figure 4.

Like characters of reference are employed to designate like parts in the specification and throughout the several views.

Referring now to the accompanying drawings in detail, the invention consists of a locking attachment for firearms, which attachment is designated generally by the reference character 10 and is adapted to be positioned on and completely enclose a trigger guard 12 of a firearm 14.

The attachment 10 embodies in its construction a housing 16 which is provided with a receptacle 18 for the reception of the trigger guard 12 as is best shown in Figure 3, while a lock chamber 20 is provided in a cylindrical, integral extension 22 of the housing 16 and communi-

2

cates with the receptacle 18 through the medium of an elongated opening 24.

A locking member 26, configurated as is best shown in Figure 5, is provided intermediate the ends thereof with a pair of laterally projecting trunnions 28 whereby it is pivotally mounted in the opening 24 so that the relatively short end portion 30 of the locking member is disposed in the chamber 20 while the relatively long end portion 32 of the locking member may be projected from the opening 24 into the receptacle 18 to engage the trigger guard as shown in Figure 3, thus sustaining the entire device in position on the trigger guard.

The member 26 is urged to this locked position by a compression spring 34 which is disposed in the chamber 30 and engages a seat 36 provided on the short end portion 30 of the member 26, substantially as shown.

A conventional lock cylinder unit designated generally by the reference character 38 is slidably and rotatably positioned in the chamber 20, the unit 38 being actuated by a suitable key 40 and including a set of projectible and retractible tumblers 42.

It is to be noted that the extension 22 of the housing 16 is recessed as at 44 so as to provide a step or shoulder 46 intermediate the ends of the chamber 20, while the inner end portion of the lock cylinder unit 38 is sectionally reduced so as to afford what may be called an adapter 48. The spring 34 urges the short end portion 30 of the locking member 26 in engagement with the adapter 48, it being noted that when the lock cylinder 38 is in its outwardly slid position as shown in Figure 3, the locking member 26 has the long end portion 32 thereof in engagement with the trigger guard 12. However, by sliding the locking unit 38 inwardly, that is, in the direction of the arrow 50, the adapter 48, engaging the portion 30 of the locking member 26, will swing the locking member about the trunnions 28 in the direction of the arrow 52, so as to retract the member portion 32 into the opening 24 and facilitate removal of the entire device from the trigger guard.

When the device is locked as shown in Figure 3, that is, with the lock cylinder 38 its outwardly slid position, the lock cylinder [illegible] be rotated so that the adapter 48 thereof [illegible] the shoulder 46 and thus prevents the lock cylinder from being slid inwardly. Rotation of the lock cylinder, in turn, is prevented by p[illegible] the housing extension 22 with a groove

PR 0024

ET50202

which the tumblers 42 of the lock cylinder may be projected by the actuation of the key 40.

The lock cylinder 38 is slidably and rotatably sustained in the chamber 20 by a retainer 58 which includes an annular portion 60 and a pair of spaced resilient legs 62. The portion 60 is positioned on the cylinder 38 between an enlarged head portion 64 of the latter and the tumblers 42, while the legs 62 are disposed in a pair of grooves 66 provided in the chamber 20 at the opposite sides of the opening 24. The portion 60 is seated in a counterbore 68 provided at the outer end of the chamber 20, which counterbore also accommodates a keeper plate 70 to sustain the retainer 58 in position. After the plate 70 is installed the extension 22 of the housing 16 is "peened" as indicated at 72 to prevent displacement of the plate.

It is believed that the advantages and use of the invention will be clearly apparent from the foregoing disclosure and accordingly, further description at this point is deemed unnecessary.

While in the foregoing there has been shown and described the preferred embodiment of this invention, it is to be understood that minor changes in the details of construction and arrangement of parts may be resorted to without departing from the spirit and scope of the invention as claimed.

Having described the invention, what is claimed as new is:

1. In a locking attachment for preventing actuation of a trigger in the trigger guard of a firearm, the combination of a housing affording a receptacle for a trigger guard and provided with a lock chamber and with an opening extending between said chamber and the interior of said receptacle, an elongated locking member pivoted intermediate the ends thereof in said opening, said locking member having a relatively short end portion disposed in said chamber and a relatively long end portion projecting from said opening into said receptacle to engage the stated guard and retain said housing in position thereon, resilient means for projecting the long end portion of said member into the receptacle, said housing being recessed to afford a shoulder intermediate the ends of said chamber, and a key-actuated lock cylinder rotatable and slidable in said chamber and having an inner end provided with a sectionally reduced adapter in operative engagement with the short end portion of said locking member whereby the long end portion of said member may be retracted from said receptacle into said opening when said lock cylinder is slid in said chamber to a position wherein said adapter is disposed inwardly of said shoulder, said adapter being engageable with said shoulder upon outward sliding and rotation of said cylinder to prevent the latter from sliding inwardly.

2. The device as defined in claim 1 wherein said resilient means comprises a compression spring provided in said chamber and abutting the short end portion of said locking member.

ELMER W. SABS.

REFERENCES CITED

The following references are of record in the file of this patent:

UNITED STATES PATENTS

Number	Name	Date
648,226	Atkinson	Apr. 24, 1900
1,569,553	Lewis et al.	Jan. 12, 1926
1,686,482	Windle	Oct. 2, 1928
1,692,825	Ganz	Nov. 27, 1928
2,313,711	Jacobi	Mar. 9, 1943
2,505,227	Charters	Apr. 25, 1950
2,512,140	Childs et al.	June 20, 1950

FOREIGN PATENTS

Number	Country	Date
350,867	France	Apr. 21, 1905
100,975	Switzerland	Aug. 16, 1923

PR 0025

ET50203

PR 0026

ET50204

Jan. 5, 1954 T. BJORKLUND 2,664,658

FIREARM TRIGGER LOCK

Filed Jan. 3, 1951

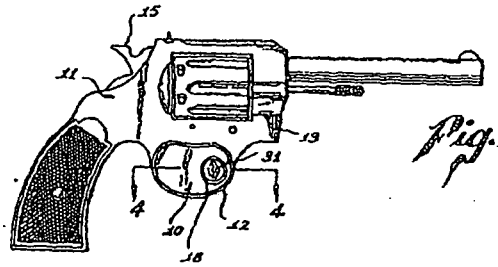

Fig. 1

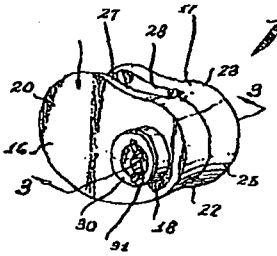

Fig. 2

Fig. 3

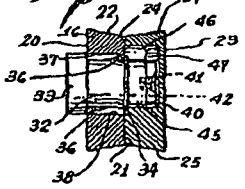

Fig. 4

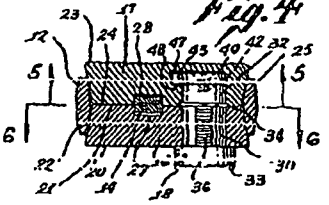

Fig. 5

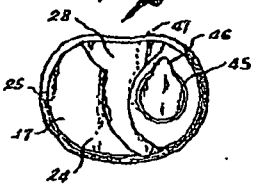

Fig. 6

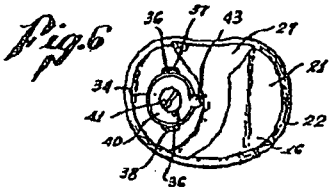

INVENTOR.
TEX BJORKLUND
BY Fulwider & Mattingly
Attorneys

PR 0027

ET50205

Patented Jan. 5, 1954 2,664,658

UNITED STATES PATENT OFFICE

2,664,658

FIREARM TRIGGER LOCK

Tex Bjorklund, Venice, Calif.

Application January 3, 1951, Serial No. 204,249

10 Claims. (Cl. 42—70)

1

My invention relates generally to devices for preventing the discharge of firearms, and more particularly to a locking device which engages within the trigger guard of a revolver or the like to positively prevent accidental or unauthorized firing of the gun.

Various kinds of safety latches have been proposed to prevent accidental discharge of loaded firearms, but such devices are easily removed and do not offer any safety when the gun is within the reach of children, nor do they prevent the unauthorized use of a stolen gun. Many of the prior latch means function only to prevent the complete stroke of a trigger and are useless on certain types of revolvers. For example, in some revolvers the hammer may be cocked with only a slight rearward or forward movement of the trigger, and once retracted, may be driven forwardly to strike the firing pin without subsequent movement of said trigger. Thus the protection is inadequate even with the latch in place.

Moreover, the prior art latches fail to provide the practical characteristics which are important to the use of the device, and would not be rendered otherwise by the addition of lock'ng means. Prior latches are in the nature of bulky appendages which clamp onto the gun rather than fit therein, and depend for security on an external bolt or latch which may be intentionally cut and removed. Any projection on the gun interferes with the proper fitting of a holster and cannot be used on sidearms which must be carried by policemen and other officers of the law.

Accordingly, it is a major object of my invention to provide a gun locking device which prevents the slightest movement of a trigger in any direction, and which is securely positioned to prevent either accidental or unauthorized discharging of the gun.

Another object of my invention is to provide a gun locking device fitted with key locking means to provide a high degree of security.

It is also an object of my invention to provide a gun locking device having internal latch means which is completely enclosed and cannot be cut free from the outside, said device being so interlocked with the integral structure of the trigger guard as to require permanent mutilation of the same in order to remove the device without the use of a key.

A further object of my invention [illegible] to provide a gun locking devi[illegible] wh[illegible] seats com[illegible]ly within the trigger gu[illegible] of and ha[illegible] members projecting outsid[illegible] normal [illegible] of the gun to interfer[illegible] fit of a [illegible]onal holster.

2

Still another object of my invention is to provide a gun locking device of simple and sturdy construction which can be economically manufactured and marketed at a low cost.

These and other objects and advantages of my invention will become apparent from the following detailed description of a preferred form thereof, and from an inspection of the accompanying drawings, in which:

Fig. 1 is a side elevation of a revolver with a preferred embodiment of the invention shown mounted therein;

Fig. 2 is a perspective view of the preferred locking device showing the opposed side plates engaged together;

Fig. 3 is a cross section of the device taken along the line 3—3 of Fig. 2;

Fig. 4 is a horizontal section taken along the line 4—4 of Fig. 1;

Fig. 5 is an interior elevation of one of the side plates taken in the direction of the arrows 5—5 of Fig. 4; and

Fig. 6 is an interior elevation of the opposed side plate taken in the direction of the arrows 6—6 of Fig. 4.

Referring now to the drawings, and particularly to Fig. 1 thereof, a preferred embodiment of my improved locking device is designated generally by the numeral 10. A conventional revolver 11 having a trigger guard 12 projecting downwardly from a main frame 13 is fitted with the locking device 10 for the purpose of completely enclosing a trigger 14 (seen in Fig. 4). The revolver 11 is of standard design and includes an upper hammer member 15 cooperatively interconnected to the trigger 14. It is to be understood, of course, that the revolver 11 is merely illustrative, and the locking device 10 may be used advantageously on a variety of different guns.

As is best seen in Fig. 2, the locking device 10 comprises two main members or plates 16 and 17 which are adapted to mate side-by-side within the trigger guard 12. Locking means 18 are provided to lock the plates 16 and 17 to each other and thus prevent access to the trigger 14. The plate 16 is formed as a tapered plug having a flat outer face 20 joined to a parallel inner face 21 by a beveled edge surface 22. Both faces 20 and 21 are preferably ellipsoidal conforming to the outline of the trigger guard 12, and the outer face 20 has a span larger than that of the guard so that the beveled edge 22 wedges against the inner rim of the guard, and the plate cannot be passed therethrough. As is best seen in Fig. 4, the beveled edge 22 wedges inwardly to the center

PR 0028

ET50206

of the guard 12, and is of a depth to provide an excess of wedging surface, with the outer plate face 20 being positioned slightly outside of the guard.

The opposite plate 17 is similarly shaped with an outer face 23 joined to an inner face 24 by a beveled edge 25. The plate 17 is adapted to wedge into the opposite half of the trigger guard 12, and is also of such proportions, that it cannot be passed completely through the guard. It should be noted that neither of the plates 16 and 17 overhangs the outer rim of the guard 12 so as to distend the profile of the latter. This is of substantial advantage when the revolver 11 is carried in a holster, and is an important feature of my invention.

In order to receive the trigger 14, the adjacent inner plate faces 21 and 24 are provided with arcuate trigger recesses 27 and 28, respectively, as are best seen in Figs. 5 and 6. The recesses 27 and 28 define mating chambers which are shaped to fit closely around the trigger 14 and prevent the slightest movement of the latter. It is therefore impossible to discharge the revolver by means of the trigger 14, and it is normally impossible to cock the hammer 15, since in substantially all revolvers the trigger is either moved forwardly or rearwardly a slight distance during the cocking operation. Furthermore, because of the raised outer faces of the plates 16 and 17, no portion of the trigger 14 is visible, and the internal construction of the plates cannot be ascertained. Thus one attempting an unauthorized removal of the locking device faces an indeterminate problem.

It will be remembered that locking means 18 are provided to lock the plates 16 and 17 together. The locking means preferably include an exposed cylindrical tumbler lock 30 which is rotatably secured within and perpendicular to the plane of the plate 16. The lock 30 is of conventional construction and has a centrally defined key slot 31 within a cylindrical body 32. An enlarged flange 33 is secured to the body 32 and projects outwardly of the plate 16 to prevent inward movement of the body. A split spring keeper ring 34 may be provided adjacent the inner plate wall 21 to hold the body 32 against outward movement, and determine the axial position of the body in cooperation with the flange 33.

Disposed longitudinally along the body 32 is a plurality of raised tumbler plates 36 which are radially slidable with respect to the body, being fitted within suitable opposed channels, and normally urged outwardly by spring tension. The tumbler plates 36 are adapted to fit within opposed locking grooves 37 and 38 formed in the plate 16 and serve to prevent rotation of the body 32. As is conventional, the tumblers 36 project outwardly in an irregular profile corresponding to the predetermined serrations for the key, and may be formed with a generally rectangular cross section, as is best seen in Fig. 6. When the key is properly inserted within the key slot 31, the tumblers 36 are retracted inwardly to an aligned position substantially flush with the surface of the body 32. In this position the body 32 may be freely rotated, since the tumblers 36 are no longer restricted by the walls of the grooves 37 and 38.

The inner end of the body 32 is extended beyond the plate 16 and is adapted to fit within the plate 17. A latch plate 40 is fastened to the terminal end of the body 32 and is fixed for rotation therewith by means such as a threaded screw 41 which engages a tapped hole 42 within

the body 32. The latch plate 40 is generally circular and has an outwardly projecting latch arm 43 which extends radially from the axis of the body 32. Upon rotation of the body 32, the latch arm engages and disengages from seat means formed in the plate 17.

As is best seen in Fig. 3, the plate 17 is provided with a circular bore 45 which extends inwardly to a depth sufficient to accommodate the body 32 and latch plate 40. At the top of the bore 45 is a semi-circular notch 46 which extends along the entire length of the bore parallel to the axis thereof. The notch 46 receives the latch arm 43 and permits rearward movement of the body 32 into the bore 45. At the back of the bore 45 is an undercut recess 47 which is laterally offset to provide a forwardly facing seat 48. The recess 47 is cut on an arc eccentric to the bore 45, as is shown in the dotted outline of Fig. 5, and is of a width to receive the latch arm 43 as the latter is rotated by the body 32. The latch arm 43 is prevented from forward movement by the seat 48 when positioned within the recess 47, and thus locks the plates 16 and 17 securely together.

In the operation of the device before the plates 16 and 17 are placed within the trigger guard 12 the key is inserted within the key slot 31. This retracts the tumbler plates 36 from the grooves 37 and 38 and allows free rotation of the body 32. By rotation of the key, the body 32 is turned so that the latch arm 43 is extended upwardly and is in a position to register with the notch 46. The plates 16 and 17 are then fitted within the guard 12 to enclose the trigger 14. As this is done the lock body 32 engages within the bore 45, and the latch arm 43 passes rearwardly through the notch 46 to a point adjacent the recess 47.

The key and body 32 are then rotated counterclockwise as viewed in Fig. 2 so that the latch arm 43 enters the recess 47. Such rotation is continued, until the end of the arm 43 abuts the eccentric peripheral wall of the recess 47. The point of intersection between the tip arc of the arm 43 and the wall of recess 47 is selected so that at the same time, the tumblers 36 are in alignment with the horizontal locking grooves 37 and 38. In other words, when the arm 43 has travelled to the end of its counterclockwise arc, it is offset from the vertical locking grooves 37 and 38 an angular amount equal to the spacing between the arm and the tumbler plates 36.

As the key is withdrawn from the key slot 31, the tumbler plates 36 spring outwardly to fit within the grooves 37 and 38 and prevent rotation of the body 32. Separation of the plates 16 and 17 is then impossible because of the engagement of the arm 43 and seat 48. As may now be fully understood, the latch arm 43 is completely enclosed within the plate 17 and cannot be cut free to remove the device. The only apparent method of removing the locking device 10 from the gun is to cut the trigger guard 12 away from the frame 13, and this step is not easily accomplished, nor could it be completed without some danger to the intruder. Hence the device provides a high degree of security against either accidental or unauthorized discharge of the gun, and yet is conveniently removed by the proper person.

Although I have described a prefer[illegible] embodiment of my invention, it is evident [illegible] modifications of design and construction [illegible] apparent to those skilled in the art, [illegible] not wish to be limited to the details ill[illegible] and

PR 0029

ET50207

described herein, except as defined in the appended claims.

I claim:

1. A locking device of the class described which includes: a pair of opposed plates having beveled peripheral edges shaped to wedge within the complemental inner surface on the trigger guard of a gun, said plates having internal mating recesses to fit around the trigger of said gun and prevent any movement thereof; key fitted locking means rotatably mounted in one of said plates and extending slidably into the other of said plates; engagement means within said first-mentioned plate to hold said locking means against rotation at a predetermined relative position; and latch means carried within said plates and operable by said locking means to move to a position interlocking said plates when said locking means are rotated to said predetermined position.

2. A locking device of the class described which includes: a pair of opposed plates having inwardly convergent beveled peripheral edges shaped to wedge within the complemental inner surface on the trigger guard of a gun, said plates having internal mating recesses to fit around the trigger of said gun and prevent any movement thereof; tumbler locking means rotatably mounted in one of said plates and lockable with said plate at a predetermined position of rotation, said locking means extending slidably into the other of said plates; and latch means mounted on said locking means for rotation therewith, said last-mentioned plate having an undercut recess to engage said latch means and interlock said plates when said locking means are rotated to said predetermined position.

3. A locking device of the class described which includes: a pair of opposed plates having flat inner faces adapted to abut each other and beveled peripheral edges converging inwardly and shaped to wedge within the opposite sides of the complemental inner surface on the trigger guard of a gun, said plates having internal mating recesses to fit around the trigger of said gun and prevent any movement thereof; a generally cylindrical body rotatably mounted within one of said plates and projecting inwardly, said body having key operated tumbler means movable to interlock with said plate at a predetermined rotational position, and the other of said plates having a bore therein to slidably engage the projecting end of said body; and a latch mounted at the inner end of said body for rotation therewith and provided with a radially projecting latch arm, said last-mentioned plate having a notch extending the length of said bore to receive said arm upon the engagement of said body in said bore, and said plate having an undercut internal recess to interlock with said latch arm upon the rotation of said body to said predetermined position.

4. A locking device of the class described which includes: a pair of opposed plates having beveled peripheral edges shaped to wedge within the opposite sides of the trigger guard of a gun, said plates having internal mating recesses to fit around the trigger of said gun and prevent any movement thereof; a generally cylindrical body rotatably mounted within one of said plates and projecting inwardly, said body having a key slot and tumbler means normally extending outwardly to interlock with said plate at a predetermined rotational position, and operable to move substantially within said body upon the insertion of a key in said slot, the other of said plates having

a bore therein to slidably engage the projecting end of said body; and a latch mounted at the inner end of said body for rotation therewith and provided with a radially projecting latch arm, said last-mentioned plate having a notch extending the length of said bore to receive said arm upon the engagement of said body in said bore, and said plate having an undercut internal recess to interlock with said latch arm upon the rotation of said body, said recess being shaped to stop the travel of said arm when said body is at said predetermined position, whereby to facilitate the withdrawal of said key for the interlocking of said body in said first-mentioned plate.

5. A locking device of the class described which includes: a pair of opposed plates having flat inner faces adapted to abut each other, and having beveled peripheral edges converging inwardly and shaped to wedge within the trigger guard of a gun, said inner plate faces having mating recesses shaped to fit tightly around the trigger of said gun and prevent any movement thereof; a generally cylindrical body rotatably mounted within one of said plates and projecting inwardly, said body having a longitudinal key slot and radially slidable tumblers mounted within said body and spring urged outwardly, and said mounting plate having a groove extending along said body and adapted to receive said tumblers to hold said body against rotation, said tumblers being movable to a position substantially flush with said body upon the insertion of a key in said slot, the other of said plates having a bore therein to slidably engage the projecting end of said body; flange means mounted on said body to engage said first-mentioned plate and hold said body against axial movement; and a latch secured to the inner end of said body for rotation therewith and provided with a radially projecting latch arm, said last-mentioned plate having a notch extending the length of said bore to receive said arm upon the engagement of said body in said bore, and said plate having an undercut internal recess offset at the distal end of said bore and formed to interlock with said latch arm upon the rotation of said body to prevent the separation of said plates, said recess being shaped eccentric to said bore to stop the travel of said arm when said tumblers are aligned with said plate groove, whereby to determine the correct position for the withdrawal of said key for the interlocking of said body in said first-mentioned plate.

6. A pair of opposed plates having beveled peripheral edges shaped to wedge within the opposite sides of the trigger guard of a gun, said plates having internal mating recesses to fit around the trigger of said gun and prevent any movement thereof; a tumbler lock rotatably mounted within one of said plates and projecting inwardly, said lock having a key slot and tumbler means engageably associated with said plate to interlock said lock at a predetermined rotational position, said tumbler means being operable to move to a position releasing said lock for rotation upon the insertion of a key in said slot, the other of said plates having a bore therein to receive the projecting end of said body; and a latch mounted on the inner end of said lock for rotation therewith, said last-mentioned plate having an undercut internal recess to interlock with said latch upon the rotation of said lock, said recess being shaped to stop the travel of said latch when said lock is [illegible] determined position. [illegible] to fit [illegible] with-

PR 0030

ET50208

drawal of said key for the interlocking of said lock in said first-mentioned plate.

7. A locking device of the class described which includes: a pair of opposed plates shaped to engage within the opposite sides of the trigger guard of a gun; means within said plates to limit the movement of the trigger of said gun; locking means rotatably mounted in one of said plates and projecting inwardly, said locking means having tumbler means operable to interlock said lock to said plate at a predetermined rotational position, and movable to a position releasing said lock upon the insertion of a key in said slot; latch means mounted at the inner end of said lock to engage the other of said plates upon the rotation of said lock for connecting said plates to each other; and means within said last-mentioned plate to stop the travel of said latch means when said lock is at said predetermined position, whereby to facilitate the withdrawal of said key for the interlocking of said lock in said first-mentioned plate.

8. A firearm trigger lock comprising a first flat plate engageable in the trigger guard of a firearm on one side of the trigger and having its periphery engaged on the inner surface of the trigger guard, a second flat plate engageable in the trigger guard on the other side of the trigger and having its periphery engaged on the inner surface of the trigger guard, a block element laterally carried by the first plate extending transversely behind the trigger to block the movement of the trigger to firing position, said block element having a free end abutting the inner surface of the second plate and spacing said plates apart, a first fastening element formed on the inner surface of one of said plates, and a second complementary fastening element laterally carried by the other of said plates and rotatably engageable therethrough for locking engagement with said first fastening element to releasably secure said plates in position in the trigger guard and position the block element in trigger locking position behind the trigger.

9. A firearm trigger lock comprising a first plate engageable in the trigger guard of a firearm on one side of the trigger and having its periphery engaged on the inner surface of the trigger guard, a second plate engageable in the

trigger guard on the other side of the trigger and having its periphery engaged on the inner surface of the trigger guard, at least one of said plates having a portion extending transversely behind the trigger to block the movement of the trigger to firing position, said portion having a free end abutting the inner surface of the second plate and spacing said plates apart, a first fastening element carried by one of said plates, and a second complementary fastening element carried by the other of said plates and movable for locking engagement with said first fastening element to secure said plates in position within said trigger guard.

10. A firearm trigger lock comprising a first plate engageable in the trigger guard of a firearm on one side of the trigger and having its periphery engaged on the inner surface of the trigger guard, a second plate engageable in the trigger guard on the other side of the trigger and having its periphery engaged on the inner surface of the trigger guard, at least one of said plates having a portion extending transversely behind the trigger to block the movement of the trigger to firing position, said portion having a free end abutting the inner surface of the second plate and spacing said plates apart, a first fastening element carried by one of said plates, a second complementary fastening element carried by the other of said plates and movable for locking engagement with said first fastening element to secure said plates in position within said trigger guard, and key fitted locking means mounted in said plate carrying said second fastening element and connected thereto for locking said second element against movement in a direction to release said plates.

TEX BJORKLUND.

References Cited in the file of this patent

UNITED STATES PATENTS

Number	Name	Date
1,569,553	Lewis et al.	Jan. 12, 1926
1,686,482	Windle	Oct. 2, 1928
2,505,227	Charters	Apr. 25, 1950

FOREIGN PATENTS

Number	Country	Date
100976	Switzerland	Aug. 16, 1923

PR 0031

ET50209

PR 0032

ET50210

April 20, 1954 L. R. CRITTENDON 2,675,638

FIRE CONTROL FOR FIREARMS

Filed Jan. 6, 1951 4 Sheets-Sheet 1

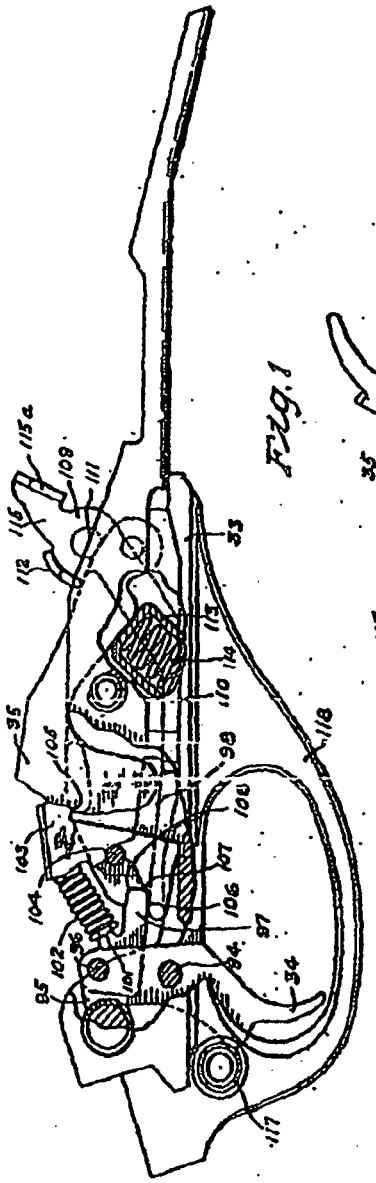

Fig. 1

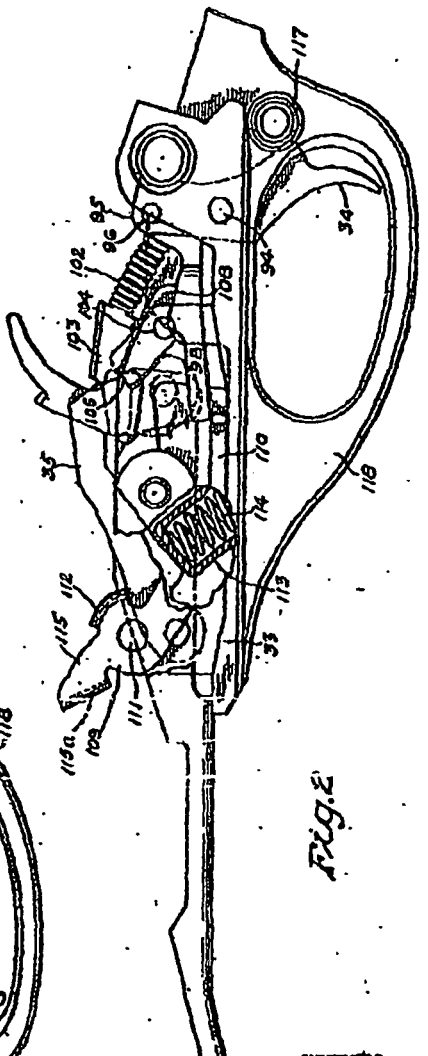

Fig. 2

INVENTOR.
LEXIE RAY CRITTENDON
BY
John H. Lewis Jr.
ATTORNEYS

PR 0033

ET50211

April 20, 1954 L. R. CRITTENDON 2,675,638

FIRE CONTROL FOR FIREARMS

Filed Jan. 6, 1951 4 Sheets-Sheet 2

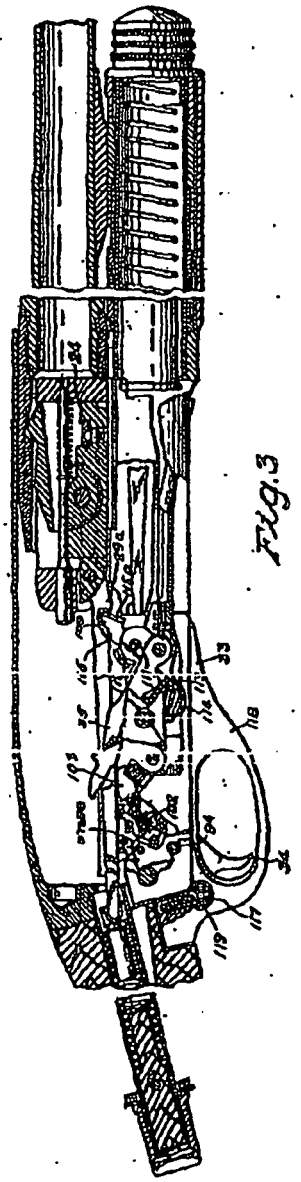

FIG. 3

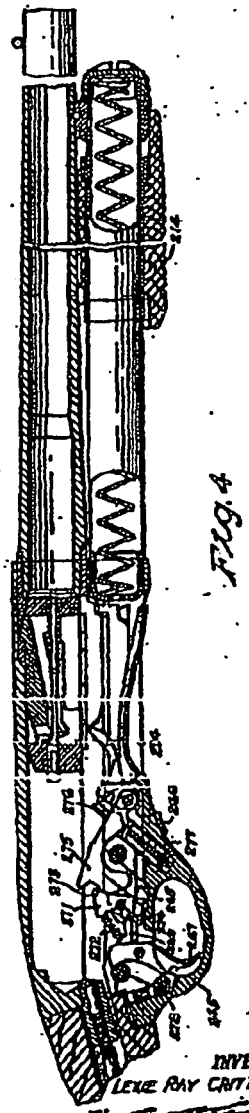

FIG. 4

INVENTOR.
LEXIE RAY CRITTENDON
BY
John H. Lewis Jr.
ATTORNEYS

PR 0034

ET50212

April 20, 1954 L. R. CRITTENDON 2,675,638

FIRE CONTROL FOR FIREARMS

Filed Jan. 6, 1951 4 Sheets-Sheet 3

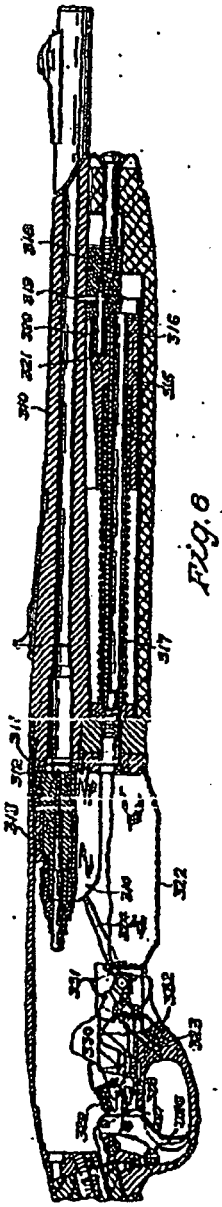

Fig. 8

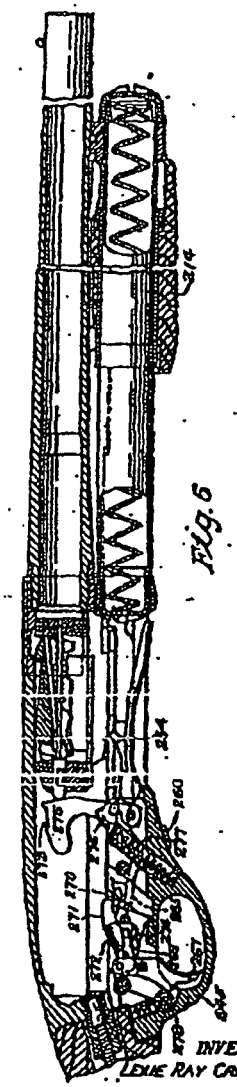

Fig. 6

INVENTOR.
LEWIS RAY CRITTENDON
BY
John H. Lewis Jr.
ATTORNEYS

PR 0035

ET50213

April 20, 1954 L. R. CRITTENDON 2,675,638

FIRE CONTROL FOR FIREARMS

Filed Jan. 6, 1951 4 Sheets-Sheet 4

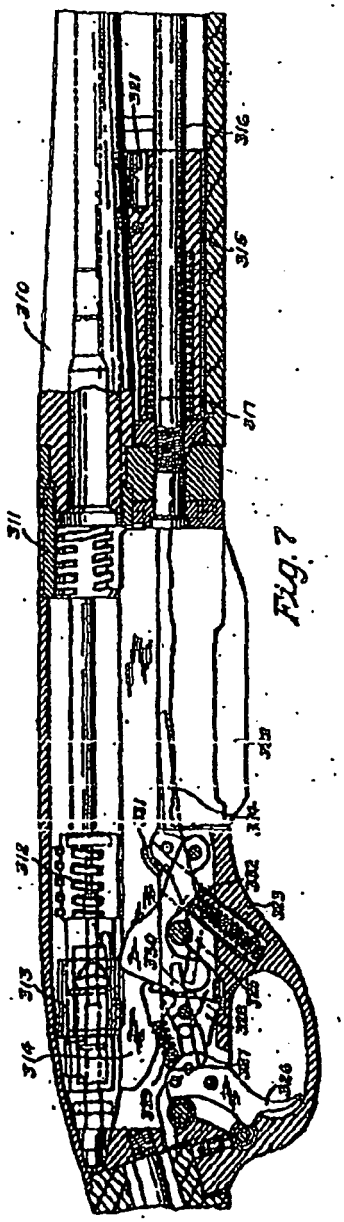

Fig. 7

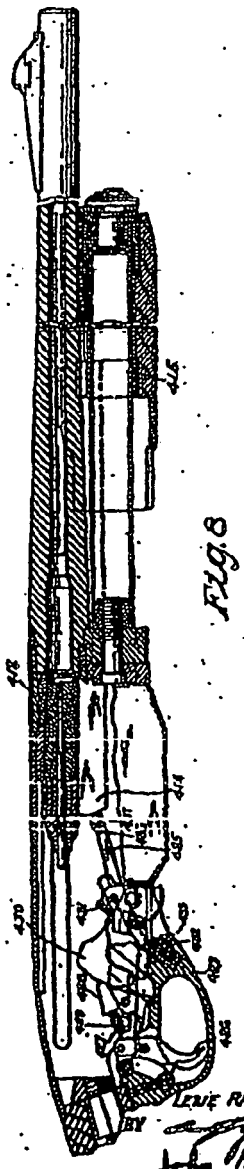

Fig. 8

INVENTOR.
LEWIS RAY CRITTENDON
BY
John H. Lewis Jr.
ATTORNEYS

PR 0036

ET50214

Patented Apr. 20, 1954 2,675,638

UNITED STATES PATENT OFFICE

2,675,638

FIRE CONTROL FOR FIREARMS

Lewis Ray Crittenden, Ilion, N. Y., assignor to Remington Arms Company, Inc., Bridgeport, Conn., a corporation of Delaware

Application January 6, 1951, Serial No. 204,706

4 Claims. (Cl. 42—69)

1

This invention relates to fire control means for breech loading firearms and is adaptable with minor modifications to manually operated, gas operated, and recoil operated firearm actions.

This application is a continuation-in-part of my copending application Serial Number 79,268, filed March 3, 1949, now Patent No. 2,570,772, and adds to the disclosure there made specific showings of the modifications necessary to function with two different types of manually operated actions and with a gas operated autoloading action.

The principal objects of this invention are the provision of a safe and thoroughly dependable fire control which can be manufactured with the greatest economy.

Another object closely related to manufacturing economy is the production of a fire control mechanism which is to the greatest possible extent, interchangeable throughout a series of several shotguns and rifles of different size and operating types.

These objects have been accomplished by the provision of a disconnector type fire control which, with a manually operated action, positively prevents firing from an unlocked breech and positively prevents firing at the instant of locking in case the trigger has not been released while the action was operated. With an autoloading [illegible] and, in addition, the disconnector fire control prevents the firing of more than a single shot for each time the trigger is pulled.

The exact nature of my new fire control will become apparent upon consideration of the following specification referring to the attached drawings in which:

Fig. 1 is a right side elevational view of the trigger plate assembly of the shotgun of my aforementioned application. Portions of the shell carrier and of the trigger plate body, not material to this invention, have been broken away for clarity in illustration.

Fig. 2 is a left side elevational view of the same unit shown in Fig. 1, also having certain immaterial supporting structure broken away for clarity in illustrating the working parts.

Fig. 3 is a vertical longitudinal sectional view showing the subject trigger mechanism in an autoloading shotgun.

Fig. 4 is a view similar to Fig. 3, showing a modification of the subject trigger mechanism installed in a slide operated shotgun. The action is locked and the hammer is cocked.

Fig. 5 is a view corresponding to Fig. 4 with the mechanism in positions occupied just after firing and the commencement of the unlocking movement of the slide.

2

Figs. 6 and 7 are views similar to Fig. 3, showing in two different positions a modification of the subject trigger mechanism assembled in a gas operated autoloading centerfire rifle.

Fig. 8 is a view similar to Fig. 3, showing a modification of the subject trigger mechanism assembled in a slide operated centerfire rifle.

Referring to the drawings, it will be noted that Figs. 1 and 2 are figures of the drawing of my prior application above referred to and that Fig. 2 is a left side view of the assembly viewed from the right in Fig. 1. In the following detailed description of this mechanism, the reference numerals and so much of the discussion as is applicable will be identical with that of the afore-mentioned application.

Referring particularly to Figs. 1, 2, and 3, it will be observed that the trigger plate 38 forms with the carrier and fire control mechanism a complete sub-assembly which is removably secured in the receiver of the shotgun. This construction greatly facilitates manufacture, inspection, and assembly. The trigger plate proper is conveniently a die casting upon which a minimum of machine operations are necessary.

The trigger 34 is supported on a pivot pin 84 and is provided above the pivot with a pair of laterally spaced upwardly extending arms 85. A pivot pin 86 passes laterally through these arms and serves to pivotally mount a connector assembly comprising a right hand arm 87 and a left hand arm 88, both extending generally forward from a point below the pivot pin 86. These arms are secured together to act as a unit by means of their common engagement upon pivot 89 and between the trigger arms 85, while they are required to rotate together as a result of the engagement of a button 89 struck up from the left hand arm with a hole 100 in the right hand arm. Intermediate the forwardly extending arms 87 and 88 and the pivot 89, a spring seat button 101 is formed to receive one end of the combined trigger and sear spring 102. The other end of the sear spring has a similar engagement with the sear 103 which is swingably supported on sear pin 104 and arranged to engage a hammer hook 105 formed on the hammer 35. Obviously, the spring 102 acts between the trigger and sear to urge the finger engaging portion of the trigger forward and to urge the sear forwardly into hammer retaining position. At the same time, it acts to rotate the connector assembly block-

PR 0037

ET50215

wise as viewed in Fig. 10, with the result that the toe of the forward end of the right hand connector arm 87 tends to engage the bottom surface 108 of a recess cut in the sear below the sear pivot and in rear of a connector abutment 107 formed in the sear surface 106. In this condition a normal pull upon the trigger serves to move the end of connector arm 87 into engagement with the abutment 107 and further movement causes the sear to turn counter-clockwise on the sear pivot and release the hammer.

Doubling or the firing of repeated shots from one operation of the trigger is prevented by the provision of a clearance recess 109 in the sear to receive the end of the connector arm after it has been disconnected from the abutment 107. When this has occurred, the trigger may be held back without effect upon the sear, which will catch and retain the hammer the next time it is cocked. Disconnection at each fall of the hammer is brought about by the disconnector 108, which has a rearwardly extending tail 110 formed to engage beneath the forward end of the left hand arm 88 of the connector assembly. The disconnector is supported by a disconnector pin 111 fitted in the trigger plate in a position which disposes an arm 112 on the disconnector in the path of the hammer spring plunger 113, which communicates the force of the hammer spring 114 to the hammer. Whenever the hammer falls, the plunger 113 engages the arm 112, raising the tail 110 and thus swinging the connector assembly counter-clockwise to disengage it from the sear. To furnish additional safety, the disconnector 108 is also provided with a safety arm 115, which extends forwardly and upwardly into a position which will be over-run by the breech bolt slide 24 whenever the slide is materially to the rear of its fully locked position. To insure that this control is maintained at all times except when locking is substantially complete, an inturned extension 115a is provided on the arm 115 and disposed beneath a cam 29a formed on the breech bolt link. Before the cam 29a disengages from the extension 115a, the lower face of the slide will have engaged the arm proper.

Summarizing, disconnection will take place as a result of hammer fall, and during the period in which the automatic loading cycle is being completed, will be maintained by the engagement of the link cams or the lower face of the slide with the arm 115. The connector can only re-engage the sear after the breech is closed and locked, and even then, it cannot re-engage until the trigger has been released and allowed to return to its normal position. If, at any time thereafter, the breech is partially or fully opened, the cam 29a and the lower rear corner 116 of the breech bolt slide act in succession to urge the disconnector to operate and disconnect the trigger from the sear, thus preventing inadvertent firing from an open breech.

The normal type of cross bolt safety comprising a slidable bolt 117 in the trigger guard 118 is provided. This bolt is, in the usual way, provided with a body portion having two diameters and when disposed to extend to the right of the guard and obstructing the usual position of a trigger finger, the large diameter portion will obstruct the rearward movement of the trigger finger piece. A spring-urged detent 119 mounted in the trigger plate releasably retains the safety in either position selected.

The modified fire control assembly shown in

Figs. 4 and 5 is, in most respects, identical with that shown in Figs. 1 to 3, inclusive, and is identical with that illustrated in the copending application of myself and Philip R. Haskell, Serial No. 141,582, filed January 31, 1950, now Patent No. 2,645,678. In this case, the only substantial change from the construction shown in Figs. 1 to 3 has been to make the action bar lock 234 integral with the disconnector 268 and to provide an action bar lock finger piece 288 extending through a slot in the bottom of the trigger plate 246.

To briefly review the operation of this fire control as applied to a slide operated gun and thus minimize the need for reference to the above-identified copending applications, it may be pointed out that the trigger 267 is pivotally mounted in the trigger plate 245 and provided at a point above its pivotal mounting with means arranged to pivotally receive a connector assembly comprising a right hand connector arm 269 and a left hand connector arm 270, both extending in a generally forward direction. When assembled to the trigger, these arms act as a unit. A sear 271 is also pivotally mounted in the trigger plate and at its upper end engages a compression spring 272 which acts at its rear end upon the connector assembly. The spring thus serves to urge the upper end of the sear forwardly and the upper end of the trigger rearwardly while simultaneously urging the arms of the connector to swing downwardly. The upper end of the sear is also formed to engage a hammer hook 273 and thereby to releasably retain the hammer in cocked position. The right hand connector arm 269 is arranged to act on a step 274 on the sear and, when the trigger is pulled, will urge the sear to swing upon its pivot and release the hammer 275. A clearance recess is also formed in the sear adjacent the step 274 to receive the end of the arm 269 and to permit the trigger to be held back without effect upon the sear. The connector may be moved to this inactive position by means of a disconnector 285 which is pivotally mounted near the forward end of the trigger plate and engages beneath the forward end of the left hand connector arm 270. The disconnector may be actuated manually by means of depressions of the action bar lock finger piece 288 which, at the same time, operates the action bar lock 234, permitting the action bars to be drawn rearwardly, unlocking the action. The disconnector is also operated as a function of the fall of the hammer 275 by means which include a short arm 276 on the disconnector positioned in the path of the hammer spring plunger 277. The very last stage of hammer plunger movement in this way swings the disconnector into operation and releases the action bar. However, the end of the action bar lock and the action bar have a frictional engagement such that no component of pull on the action bar acts to swing the disconnector into disconnecting position. Instead, the engagement is, at a minimum, arranged so that a rearward pull on the fore-end 214 will apply sufficient frictional force at the engaging faces to prevent the disconnection from taking place until that rearward pull is released. At a maximum, the surfaces may engage at such an angle that actual forward movement of the action bars is required before disconnection is possible. When the gun fires normally, such a relaxing or actual forward movement is involuntary as the gun recoils relative to its support by the fore-end. In a misfire, or hangfire, this rela-

PR 0038

ET50216

tionship prevents unlocking the action involuntarily with the hazard of a hangfire exploding with an unlocked breech. When the disconnector has operated, the trigger will remain inoperative until the action has been again closed and completely locked with the action bar lock in its proper place. Thus, the trigger cannot be accidentally pulled to fire the shell as the breech is being closed. Further, if the trigger is held back while the action is operated, the sear will retain the hammer until such time as the trigger has been released and the action bar lock engaged. The usual type of manually operable cross bolt safety 278 is also provided to positively block inadvertent trigger operation when the gun is carried loaded and locked. This fire control for a slide action gun is as safe as possible in that it may be positively locked, cannot fire on an open breech, cannot fire a second shot without deliberately releasing, and cannot be involuntarily opened during a hangfire. Further, it will be noted that the sear and trigger are centrally pivoted and thus almost perfectly balance with respect to jolts and jars from any direction. Substantially the only condition which could cause accidental firing if the gun were dropped or otherwise jarred with the safety off would be an actual physical impact of the trigger upon some relatively fixed object.

Figs. 6 and 7 show the application of my improved fire control to a gas operated autoloading centerfire rifle. This rifle, it may be noted, comprises a barrel 310 fitted with a barrel extension 311. Interrupted thread type locking lugs on the breech bolt 312 are arranged to lock to the barrel extension and a breech bolt carrier 313 is provided to guide and cause the rotation of the breech bolt between locked and unlocked position. The carrier 313 is joined by laterally spaced action bars 314 to an action sleeve 315 mounted for reciprocation on action tube 316 and urged forwardly by an action spring 317. The barrel is provided with a depending lug 318 which supports the forward end of the tube 316 and has formed within it a gas orifice 319 communicating with the barrel bore. From the orifice a short gas tube or piston 320 extends rearwardly into a blind hole or gas cylinder 321 in the action sleeve 315 with a loose enough fit to permit gas to reverse itself and pass forwardly around the gas tube, applying both impulse and reaction effects to the sleeve. This action, as well as any of the conventional gas operated actions, unlocks and carries the bolt rearwardly after the bullet has passed the gas orifice and is thereafter closed by the spring carrying into the chamber a fresh cartridge from the magazine 322.

My improved fire control for this rifle differs from that illustrated in Figs. 1 to 5 only in the provision of a trigger plate 323 adapted to accommodate and retain the magazine 322 and in shaping the safety arm 324 on the disconnector 325 to engage with the action bar 314. The trigger 326, connector 327, sear 328, spring 329, and hammer 330, may, in fact, be absolutely identical with the parts referred to in the discussion of the two previous modifications. Also, as in those modifications, the disconnector 325 is provided with an arm 331 arranged to be engaged by the hammer spring plunger 332 to disconnect the trigger from the sear each time the hammer falls. Obviously, the safety arm 324 will prevent a re-engagement until the action bar 314 has again returned to a position corresponding to a

locked breech bolt, and the reception of the end of the connector 327 in the recess 333 in the sear will prevent a re-engagement until after the trigger has been released. Since the parts of the fire control mechanism responsible for this functioning have been discussed in detail in connection with the two preceding modifications, further discussion of this modification appears to be unnecessary.

Fig. 8 shows the application of my improved fire control to a slide actuated centerfire rifle. This rifle uses the same breech bolt mechanism discussed relative to Figs. 6 and 7, but actuates that mechanism by attaching the action bars 414 to an action sleeve 415 on which there is mounted a conventional wooden fore-end by which the breech bolt 412 may be manually operated. The trigger plate 423 may be identical to that shown in Figs. 6 and 7 except for the provision of a slot through which a finger piece 435 on the disconnector 428 extends for manual operation. The trigger 426, connector 427, sear 428, spring 429, and hammer 430 are, or may be, identical with those previously described. In this modification the disconnector 428 is similar in function to that shown in Figs. 4 and 5, in that it functions as an action bar lock under the control of the finger piece 435. As in the other modifications, an arm 431 is arranged to be engaged by the hammer spring plunger 432 to provide for automatic disconnection on hammer fall. Since the safety arm 434 is squared off at the end 436 and engages a squared face 437 on the action bar, it is obvious that the breech cannot be inadvertently unlocked when the hammer is cocked. The angular relationship of the surfaces 436 and 437 relative to the disconnector axis is governed by those principles discussed relative to Figs. 4 and 5 and may conveniently be made such as to provide "hangfire" protection. Further discussion of this modification appears to be unnecessary in view of the detailed discussion which has preceded.

From the above, it will be realized that my improved fire control is capable of wide application to various types of arms and that my invention is not limited to these modifications specifically illustrated. For a definition of the limits upon my invention, reference may be made to the appended claims.

I claim:

1. A fire control mechanism comprising in combination a striker movable from a cocked position to a fired position; a thrust member engaged with said striker; a striker spring engaging the thrust member and acting therethrough to urge said striker to move from a cocked position to a fired position; a trigger pivotally mounted for manual displacement from a normal position to a fired position, the point of pivotal mounting of said trigger being intermediately placed with reference to the mass of the trigger; a sear comprising an abutment and a striker engaging member pivotally mounted at a position intermediate said abutment and said striker engaging member for movement between a striker retaining position and a striker releasing position; a connector pivotally mounted on a portion of said trigger remote from the manually engageable portion and extending therefrom into normal engagement with said abutment for transmitting movement of said trigger toward said fired position to said sear to move the sear toward striker releasing position; a single spring compressibly engaged between the striker engag-

PR 0039

ET50217

ing end of said sear and a portion of said connector adjacent said trigger, the single spring simultaneously urging the sear to striker retaining position, the connector into position for engagement with said abutment, and the trigger into said normal position; and disconnector means engaged with said connector and positioned for engagement by said thrust member for displacing the connector from engagement with said abutment as the striker moves from cocked position to fired position.

2. A fire control mechanism comprising in combination a striker movable from a cocked position to a fired position; a thrust member engaged with said striker; a striker spring engaging the thrust member and acting to urge said striker from a cocked position to a fired position; a sear pivotally mounted intermediate its ends and having one end formed to define a striker holding hook and the other end formed to define an abutment, said sear being shiftable on its pivotal mounting between a striker holding position and a striker releasing position; a pivotally mounted trigger having a finger engaging portion positioned to permit manual displacement of the trigger away from a normal position; an arm on said trigger extending away from the point of pivotal mounting of the trigger; a connector pivotally mounted on said arm of the trigger and comprising an element extending therefrom into a normal position of engagement with said sear abutment and in that normal position operative to transmit movement of said trigger in a direction away from its normal position to said sear in a direction tending to move said sear to striker releasing position; a compression spring engaged between said connector and the end of said sear formed to define the striker holding hook, said spring tending to hold the sear in striker holding position and to hold the connector and trigger in their said normal positions; and disconnector means comprising a pivotally mounted member having a first arm disposed in the path of movement of said thrust member to be moved thereby as the striker moves to fired position and a second arm engaging the connector to shift same out of its position of normal engagement with the sear abutment as said first arm is moved in response to movement of the thrust member as the striker moves to fired position.

3. In a firearm of the type having a receiver, a breech bolt in said receiver movable between breech closing and breech opening positions, and a striker member operable to drive a firing pin to protrude from the front face of said bolt; the combination with said bolt and said striker member of fire control means including a trigger pivotally mounted for manual displacement from a normal position; a sear comprising an abutment end a striker engaging member pivotally mounted for movement from a striker retaining position to a striker freeing position; a connector pivotally mounted on said trigger and comprising an element normally positioned in engagement with said sear abutment normally acting to transmit the movement of said trigger to the sear; a spring interconnected between elements of said sear and of said connector acting to urge said sear toward striker engaging position and simultaneously acting to urge both said connector and said trigger to their said normal positions; and disconnector lever means pivotally mounted in engagement with the connector acting when said disconnector is moved to transmit movement to said connector for displacing said connector element from engagement with the sear abutment, said disconnector being provided with an actuating element associated with said striker and movable thereby to displace said connector as the striker operates upon the firing pin and with a second actuating element associated with said breech bolt and movable thereby to displace said connector when said bolt is moved away from breech closing position.

4. A fire control mechanism comprising a pivotally mounted hammer; a thrust member engaged with said hammer, a hammer spring engaging the thrust member and acting to urge said hammer from a cocked position to a fired position; a sear pivotally mounted intermediate its ends and having one end formed to define a hammer holding hook and the other end formed to define an abutment, said sear being shiftable on its pivotal mounting between a hammer holding position and a hammer releasing position; a pivotally mounted trigger having a finger engaging portion positioned to permit manual displacement of the trigger from a normal position; an arm on said trigger extending away from the point of pivotal mounting of the trigger; a connector pivotally mounted on said arm of the trigger and comprising an element extending therefrom into normal engagement with said sear abutment and operative to transmit movement of said trigger away from its normal position to said sear in a direction tending to move said sear to hammer releasing position; a compression spring engaged between the connector and the hammer holding end of said sear tending to hold the sear in hammer holding position and said connector and trigger in normal positions; and disconnector means comprising a pivotally mounted member having a first arm disposed in the path of movement of said thrust member to be moved thereby as the hammer moves to fired position and a second arm engaging the connector to shift same out of its normal engagement with the sear abutment as said first arm is moved by the thrust member.

References Cited in the file of this patent

UNITED STATES PATENTS

Number	Name	Date
941,749	Wiles	Nov. 30, 1909
1,289,855	Wesson	Jan. 7, 1919
1,410,268	Pederson	Mar. 21, 1922
1,884,410	Loomis	Dec. 1, 1931
1,911,859	Freamer	May 30, 1933
2,103,578	Reiling	Mar. 1, 1938
2,380,328	Norman	July 10, 1945
2,390,051	Eklund	Dec. 4, 1945

PR 0040

ET50218

7

PR 0041

ET50219

Aug. 26, 1969 C. C. WALLACE 3,462,869

KEY OPERATED SAFETY LOCK DEVICE FOR FIREARMS

Filed Aug. 14, 1967

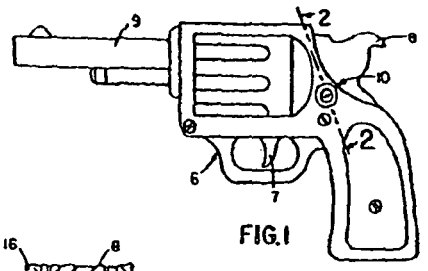

FIG.1

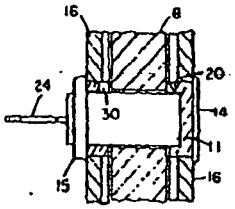

FIG.3

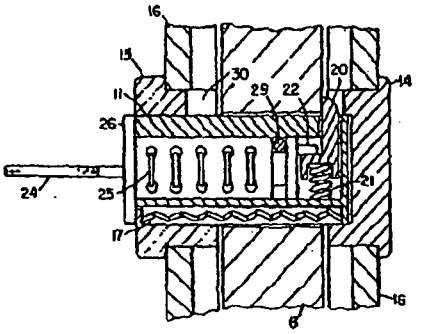

FIG. 2

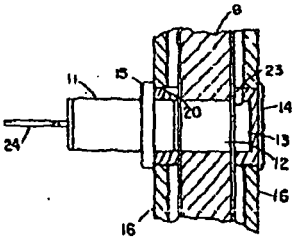

FIG.4

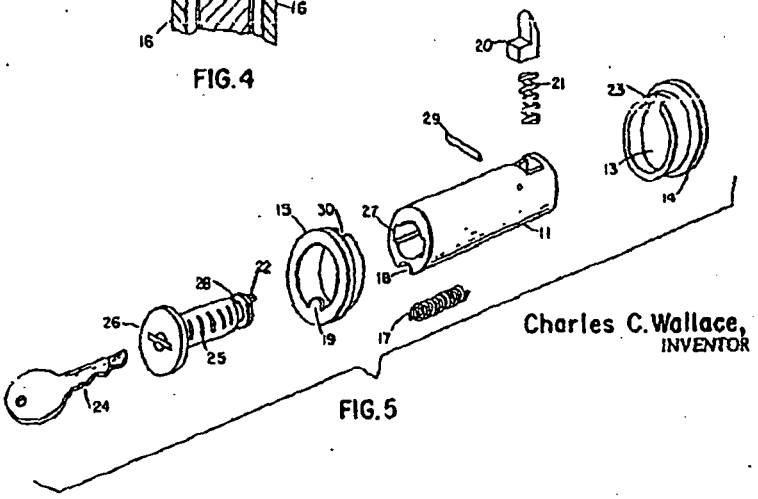

Charles C. Wallace,
INVENTOR

FIG.5

PR 0042

ET50220

United States Patent Office

3,462,869

Patented Aug. 26, 1969

1

3,462,869

KEY OPERATED SAFETY LOCK DEVICE FOR FIREARMS

Charles Coleman Wallace, 2210 E. Arbor Drive, NE., Huntsville, Ala. 35811

Filed Aug. 14, 1967, Ser. No. 660,406
Int. Cl. F41c 17/00
U.S. Cl. 42—70
1 Claim

ABSTRACT OF THE DISCLOSURE

A firearm including a hammer and key-operated safety lock wherein the hammer of the firearm can only be operated when a key is inserted in the lock and the key operated.

Safety locks for firearms of the type anyone can operate are various and many, but do not provide for adequate control of the hazards encountered with a firearm. Some methods of securing a firearm from discharging have been attempted by restricting the gun's use to the owner of a personalized key, but the majority of these devices thus far have proven impractical or undesirable.

The principal objects of this invention are to to provide a desirable and reliable safety lock for applicable firearms.

Further objects of this invention are embodied in its arrangement and the function of its parts, which provide advantages in cost, adaptability, reliability, quick locking and to control who may use the firearm by having the lock's release activated with a personalized key. The objectives of this inventive concept will become more apparent after reviewing the following description and the accompanying drawings.

In the drawings:

FIG. 1 depicts a side elevational view showing the location of the invention on a conventional type of firearm.

FIG. 2 is an enlarged cross-sectional view from FIG. 1 taken along the lines 2—2 showing the assembly of parts in a locked position.

FIG. 3 is a cut-away view representing the locked position of the invention.

FIG. 4 is a cut-away view representing the unlocked position of the invention.

FIG. 5 is an exploded view of parts for identification and sequence purposes.

From FIG. 1, having reference now of a typical revolver 6 with conventional parts such as a trigger 7, hammer 8, barrel 9, and other normal features, the invention 10 is viewed with an outward appearance of a key entrance. Also seen in this view is the location of the invention being applied to counteract the hammer's movement, which is described hereinafter.

Viewing FIGS. 2 and 3, one may see the assembly of the instant invention in a locked state, with the hammer 8 being trapped by the lock cylinder housing 11. The latter is passed through a prepared opening 12 in the hammer 8 by means of pushing or pressing into this position. One end of the cylinder 11 is resting in the hollow 13 of the end plug 14 and is supported at the opposite end by the guidestop 15. The end plug 14 and guide-stop 15 parts are mounted to the structural side 16 of the firearm by means of brazing or pressfit them in place. A tension spring 17, located in groove of lock cylinder housing 11, is attached, by suitable means between one end of the cylinder and the guide-stop or tab 19. Said tab also maintains alignment for the assembly of the invention. The tension spring 17 attempts to remove the lock cylinder housing from said hammer's passage but is halted from doing so by retaining latch 20. Retaining latch 20 as viewed in FIG. 2 is being pushed from lock cylinder housing by compression spring 21 and held from exiting by eccentric block 22. Retaining latch is guided by slide surfaces in housing so as to limit latch to an inward and outward direction. The exposed part of retaining latch 20 is so shaped, where one side is flat for locking purposes and the other side is beveled. When the assembly is being pushed inward to be locked the beveled surface allows the latch to be forced into the housing, thus permitting inward travel of the assembly to the prepared stopping point. The tension spring 17 pulls retaining latch against side of hammer's structure. In this position the exposed part of latch resides in the notch 23 of the end plug.

2

The above mentioned relative position of parts constitutes a situation where said hammer is rigidly held and prevented from supplying the necessary force required to cause the firing pin to contact the explosive cap of the projectile. This situation also, of course, causes hammer to provide a blockage against some other force acting on the firing pin.

In order to release the locking mechanism from halting hammer's normal operation, it becomes necessary to insert a conventionally individualized key 24 into invention's assembly and turning to operate a common set of lock tumblers 25. This allows internal rotation of tumbler's body 26 which is mated with lock cylinder's housing 11. This mating involves the conventional radial slots 27 in the housing to provide for the tumblers 25 a non-rotation position, when the key is not engaged. The tumbler body 26 is kept within and allowed to rotate in lock cylinder housing 11 by means of a common groove 28 and roll pin 29 method. The rotation of tumbler body 26 thus rotates eccentric block 22, which is an integral part of the tumbler body. The eccentric block 22 moves against retaining latch, because of its eccentricity, thus compressing compression spring 21 until retaining latch 20 is within the lock cylinder's housing 11; thereby permitting the tension spring 17 to pull the lock cylinder housing out of hammer's passageway 12 to an out-of-the way position. The releasing of the key 24 allows the compression spring to force tumbler body by way of the eccentric block back to the initial position. This also causes retaining latch to protrude the housing as before, being halted by the eccentric block. The exposed part of latch now takes up position against and in notch 30 of the guide-stop. The tension spring still maintains some tension at this position thereby holding housing against guide stop. The complete removal of the lock cylinder housing from the firearm is prevented by the tab 19 of the guide-stop part. The aforementioned unlocked position is illustrated in FIG. 4.

The invention assembly 10 is not dependent upon the engagement of the key 24, to put the firearm into the state of being locked, which is done, as previously stated, by merely pressing the exposed part of the lock cylinder housing into the interior of the weapon until it is retained internally by stated means. It does become necessary for the key to be engaged with the tumblers to release the locking mechanism, but there is no mechanical reason why the key cannot be left engaged during the locking and unlocking process if desired.

It is understood that this inventive concept is representative of the invention's objectives and is not to be taken in the limiting sense. For example, when the invention is applied to various designs of handguns or shoulder firearms, it will become necessary to locate the invention in a more advantageous position in the partic-

PR 0043

ET50221

United States Patent Office

3,462,869

Patented Aug. 26, 1969

1

3,462,869

KEY OPERATED SAFETY LOCK DEVICE FOR FIREARMS

Charles Coleman Wallace, 2210 E. Arbor Drive, NE., Huntsville, Ala. 35811

Filed Aug. 14, 1967, Ser. No. 660,406
Int. Cl. F41e 17/00
U.S. Cl. 42—70 1 Claim

ABSTRACT OF THE DISCLOSURE

A firearm including a hammer and key-operated safety lock wherein the hammer of the firearm can only be operated when a key is inserted in the lock and the key operated.

Safety locks for firearms of the type anyone can operate are various and many, but do not provide for adequate control of the hazards encountered with a firearm. Some methods of securing a firearm from discharging have been attempted by restricting the gun's use to the owner of a personalized key, but the majority of these devices thus far have proven impractical or undesirable.

The principal objects of this invention are to to provide a desirable and reliable safety lock for applicable firearms.

Further objects of this invention are embodied in its arrangement and the function of its parts, which provide advantages in cost, adaptability, reliability, quick locking and to control who may use the firearm by having the lock's release activated with a personalized key. The objectives of this inventive concept will become more apparent after reviewing the following description and the accompanying drawings.

In the drawings:

FIG. 1 depicts a side elevational view showing the location of the invention on a conventional type of firearm.

FIG. 2 is an enlarged cross-sectional view from FIG. 1 taken along the lines 2—2 showing the assembly of parts in a locked position.

FIG. 3 is a cut-away view representing the locked position of the invention.

FIG. 4 is a cut-away view representing the unlocked position of the invention.

FIG. 5 is an exploded view of parts for identification and sequence purposes.

From FIG. 1, having reference now of a typical revolver 6 with conventional parts such as a trigger 7, hammer 8, barrel 9, and other normal features, the invention 10 is viewed with an outward appearance of a key entrance. Also seen in this view is the location of the invention being applied to counteract the hammer's movement, which is described hereinafter.

Viewing FIGS. 2 and 3, one may see the assembly of the instant invention in a locked state, with the hammer 8 being trapped by the lock cylinder housing 11. The latter is passed through a prepared opening 12 in the hammer 8 by means of pushing or pressing into this position. One end of the cylinder 11 is resting in the hollow 13 of the end plug 14 and is supported at the opposite end by the guidestop 15. The end plug 14 and guide-stop 15 parts are mounted to the structural side 16 of the firearm by means of brazing or pressfitting them in place. A tension spring 17, located in groove of lock cylinder housing 11, is attached, by suitable means between one end of the cylinder and the guide-stop or tab 19. Said tab also maintains alignment for the assembly of the invention. The tension spring 17 attempts to remove the lock cylinder housing from said hammer's passage but is halted from doing so by retaining latch 20. Retaining latch 20 as viewed in FIG. 2 is being pushed from lock cylinder housing by compression spring 21 and held from exiting by eccentric block 22. Retaining latch is guided by slide surfaces in housing so as to limit latch to an inward and outward direction. The exposed part of retaining latch 20 is so shaped, where one side is flat for locking purposes and the other side is beveled. When the assembly is being pushed inward to be locked the beveled surface allows the latch to be forced into the housing, thus permitting inward travel of the assembly to the prepared stopping point. The tension spring 17 pulls retaining latch against side of hammer's structure. In this position the exposed part of latch resides in the notch 23 of the end plug.

2

The above mentioned relative position of parts constitutes a situation where said hammer is rigidly held and prevented from supplying the necessary force required to cause the firing pin to contact the explosive cap of the projectile. This situation also, of course, causes hammer to provide a blockage against some other force acting on the firing pin.

In order to release the locking mechanism from halting hammer's normal operation, it becomes necessary to insert a conventionally individualized key 24 into invention's assembly and turning to operate a common set of lock tumblers 25. This allows internal rotation of tumbler's body 26 which is mated with lock cylinder's housing 11. This mating involves the conventional radial slots 27 in the housing to provide for the tumblers 25 a non-rotation position, when the key is not engaged. The tumbler body 26 is kept within and allowed to rotate in lock cylinder housing 11 by means of a common groove 28 and roll pin 29 method. The rotation of tumbler body 26 thus rotates eccentric block 22, which is an integral part of the tumbler body. The eccentric block 22 moves against retaining latch, because of its eccentricity, thus compressing compression spring 21 until retaining latch 20 is within the lock cylinder's housing 11; thereby permitting the tension spring 17 to pull the lock cylinder housing out of hammer's passageway 12 to an out-of-the way position. The releasing of the key 24 allows the compression spring to force tumbler body by way of the eccentric block back to the initial position. This also causes retaining latch to protrude the housing as before, being halted by the eccentric block. The exposed part of latch now takes up position against and in notch 30 of the guide-stop. The tension spring still maintains some tension at this position thereby holding housing against guide stop. The complete removal of the lock cylinder housing from the firearm is prevented by the tab 19 of the guide-stop part. The aforementioned unlocked position is illustrated in FIG. 4.

The invention assembly 10 is not dependent upon the engagement of the key 24, to put the firearm into the state of being locked, which is done, as previously stated, by merely pressing the exposed part of the lock cylinder housing into the interior of the weapon until it is retained internally by stated means. It does become necessary for the key to be engaged with the tumblers to release the locking mechanism, but there is no mechanical reason why the key cannot be left engaged during the locking and unlocking process if desired.

It is understood that this inventive concept is representative of the invention's objectives and is not to be taken in the limiting sense. For example, when the invention is applied to various designs of handguns or shoulder firearms, it will become necessary to locate the invention in the most advantageous position in the partic-

PR 0044

ET50222

ular firearm. Also in some types of firearms, where applicable, it may be more desirable to apply the invention to retaining the trigger 7 from movement, thereby creating the same effect.

Having thus described the invention, the following is claimed as new and useful, upon which Letters Patent is desired:

1. A firearm including

a pivoted hammer having an opening therethrough,

an end plug in the firearm on one side of said hammer having a notch in the upper part of said plug,

a guide stop in the firearm on the other side of said hammer having a tab on the lower part of said stop, and

a key-operated safety lock comprising a cylindrical housing having an opening in the top thereof and slidable between said end plug and said guide stop through the opening in said hammer,

a longitudinal groove in the outer surface of said housing,

a tension spring located in said groove and attached at one end to said housing and at the other end to said guide stop tab,

a retaining latch having a flat surface and an opposing beveled surface protruding through the opening in said housing and said notch in said end plug to engage said hammer,

a compression spring exerting a force on said retaining latch, and

a tumbler body in said housing, said body having an eccentric block for engaging said latch and in order to disengage it from said hammer.

References Cited

UNITED STATES PATENTS

565,678	8/1896	Foster	42—66
2,527,957	10/1950	Phillips.	
2,742,726	4/1956	Feller.	
2,882,636	4/1959	Shinaver.	
2,945,316	7/1960	Mulno	46—66
2,994,981	8/1961	Carrigan	42—66
3,164,919	1/1965	Hall.	
3,258,871	7/1966	Green.	

BENJAMIN A. BORCHELT, Primary Examiner

PR 0045

ET50223

Patented Dec. 17, 1940

2,225,583

UNITED STATES PATENT OFFICE

2,225,583

SAFETY DEVICE FOR THE FIRING MECHANISMS OF FIREARMS

Charles E. Bihard, New Haven, Conn., assignor to Western Cartridge Company, New Haven, Conn., a corporation of Delaware

Application January 12, 1940, Serial No. 318,499

11 Claims. (Cl. 42—70)

The present invention relates to improvements in safety devices, and more particularly to safety devices whereby the firing mechanisms of firearms may be locked or rendered ineffective to thus guard against the accidental or unintentional discharge of the firearm of which the device may form a feature.

It very often happens that a user of a firearm, especially when engaged in a shooting match requiring the firing at a suddenly-appearing and fast-moving target, is very much concerned for fear that the safety device of the firearm being used has been shifted into its non-firing or "safe" position, either unintentionally by the user or by the mischievous or malicious action of a competitor. Many shooters have, therefore, entirely removed the safety device from their firearms in order to guard against having their firearms ineffective when the shooter is called upon to fire at a suddenly-appearing and fast-moving target.

The present invention, as will be apparent from the following considered in conjunction with the accompanying drawings, is directed at a construction and arrangement of parts whereby a safety device may be locked in a position whereby it interposes no interference with the discharge of the firearm.

One of the objects of the present invention is to provide a superior safety device for the firing mechanism of a firearm which may be rapidly and conveniently locked in its so-called "firing" position wherein it does not in any way interfere with the normal functioning of the firing mechanism of the firearm in which it is embodied.

A further object of the present invention is to provide a superior device of the character referred to which is low in cost for manufacture and reliable and effective in its action.

A further object of the present invention is to provide a superior safety device for the firing mechanism of a firearm in which the movement required to lock the safety device is of a different nature than that required to normally shift it from and into either its so-called "safe" position or its so-called "firing" position, to thus minimize the possibility of confusion.

Still another object of the present invention is to provide a superior safety device of the character referred to, wherein the manipulation of a single member will effect the holding of the firing mechanism of the firearm against normal operation, effect the release of such firing mechanism for normal operation, and which will securely lock the safety device in a position of non-interference with the firing mechanism.

With the above and other objects in view, as will appear to those skilled in the art from the present disclosure, this invention includes all features in the said disclosure which are novel over the prior art and which are not claimed in any separate application.

In the accompanying drawings, in which certain modes of carrying out the present invention are shown for illustrative purposes:

Fig. 1 is a view partly in side elevation and partly in vertical central-longitudinal section of the trigger-plate unit of a firearm in which is incorporated a firing mechanism and a safety device embodying the present invention;

Fig. 2 is a broken transverse sectional view taken on the line 2—2 of Fig. 1 but on a larger scale and showing the safety-slide in its "normal firing-position";

Fig. 3 is a fragmentary perspective view of the rear portion of the parts shown in Fig. 1, with the trigger-plate and the safety-slide shown partly in section, and with the said safety-slide shown in its "normal firing-position";

Fig. 4 is a broken transverse sectional view corresponding to Fig. 2 but showing the safety-slide shifted into its "safe" position;

Fig. 5 is a fragmentary perspective view corresponding to Fig. 3 but showing the safety-slide shifted into its "safe" position;

Fig. 6 is a broken transverse sectional view corresponding to Figs. 2 and 4 save that the safety-slide is shown moved into its "locked firing-position";

Fig. 7 is a fragmentary perspective view corresponding to Figs. 3 and 5 save that the safety-slide is shown shifted into its "locked firing-position";

Fig. 8 is a broken view in vertical central-longitudinal section of the rear portion of the assembly shown in Fig. 1 and taken on the line 8—8 of Fig. 6;

Fig. 9 is a perspective view of the safety-slide detached and viewing the same mainly from the rear; and

Fig. 10 is a similar view but viewing the safety-slide mainly from the front.

In the accompanying drawings a safety device constructed in accordance with the present invention is shown as organized with a trigger-plate 20 which may form a feature of any suitable type of firearm, which latter does not require detailed illustration or description herein. The said trigger-plate is formed with a usual

PR 0046

ET50224

integral loop-like trigger-guard 21 and with a central-longitudinal mechanism-receiving channel 22 opening upwardly through the upper surface of the trigger-plate substantially throughout the major portion of the length thereof and at its rear end intersecting the space circumscribed by the loop-like trigger-guard 21. The forward portion of the said mechanism-receiving channel 22 is closed at its lower end by a bottom-wall 23 formed integral with the trigger-plate 20.

Extending transversely across the forward portion of the mechanism-receiving channel 22 and the trigger-plate 20, is a pivot-pin 24 upon which is pivoted a hammer 25, the upper portion of the forward face of which is adapted to strike a firing-plunger or other suitable firing-member which is indicated by the broken lines 26 in Fig. 1.

Pivotally connected by means of a pivot-pin 27 to the rear portion of the hammer 25 is the forward or head-end 28 of a rocking and reciprocating hammer-actuating plunger generally designated by the reference character 29. The said plunger 29 also includes a rearwardly-extending cylindrically-contoured shank 30 freely movable in a passage 31 formed in a bridge portion 32 extending across the mechanism-receiving channel 22 in the trigger-plate 20 about midway the length thereof and forming a rigid feature of the said trigger-plate. Thrusting forwardly against a rearwardly-facing thrust-shoulder 33 formed on the plunger 29 at the junction of the head-end 28 and the shank 30 thereof, is the forward end of a helical hammer-spring 34 encircling the said shank 30 and pressing at its rear end against the front face of the bridge portion 32 of the trigger-plate 20. As thus arranged, the hammer-spring 34 exerts a constant effort to swing the hammer 25 in a clockwise direction to cause the same to strike the firing-plunger 26 (Fig. 1).

In its lower portion the hammer 25 is formed with a cocking-abutment 35 which is releasably engageable by the forward face of a sear-nose 36 constituting the forwardly-extending arm of a pivotal sear 37. The said sear 37 is located in the mechanism-receiving channel 22 of the trigger-plate 20 and is pivotally mounted therein about midway of its length upon a pivot-pin 38 extending transversely across the said channel 22. Pressing upwardly upon the sear-nose 36 of the sear 37 so as to yieldingly hold the said sear-nose in position for engagement with the cocking-abutment 35 of the hammer 25, is a helical sear-spring 39 seated at its lower end in an upwardly-opening spring-pocket 40 formed in the upper surface of the bottom-wall 23 of the trigger-plate 20, as is shown in Fig. 1.

In addition to its forwardly-extending sear-nose 36, the sear 37 is formed with a rearwardly-projecting arm 41 having its rear portion normally resting upon an upwardly-facing actuating-abutment formed at the forward end of a pivotal transmitting-member 42. The upper rear portion of the transmitting-member 42 just referred to is mounted for pivotal movement upon a pivot-pin 44 extending transversely across the upper rear portion of the mechanism-receiving channel 22 in the trigger-plate 20.

The main portion of the transmitting-member 43 extends in and through a longitudinal channel 45 formed in a trigger 46 and opening through the under face of the said trigger adjacent the forward end thereof. The said trigger is mounted at its forward end for pivotal movement in the mechanism-receiving channel 22 in the trigger-plate 20, by means of a transverse pivot-pin 47 as is shown in Fig. 1. The bottom wall of the channel 45 in the trigger 46 is adapted to engage with a transmitting-lug 48 depending from the transmitting-member 43 about midway the length thereof.

The trigger 46 is provided at its rear with a rearwardly-and-downwardly-curved finger-piece 49 projecting into position for engagement by the finger of a marksman inserted through the trigger-guard 21. The said trigger 46 is also formed with a rearwardly-extending integral stop-finger 50 which is adapted to cooperate with a safety-slide 51, in a manner as will hereinafter appear.

The safety-slide 51 above referred to is of cylindrical form generally, and is mounted for both reciprocation and oscillation in a cylindrically-contoured guideway 52 extending transversely across the trigger-plate 20 adjacent the rear portion of the trigger-guard 21 and adjacent the stop-finger 50 of the trigger 46. The forward portion of the transverse guideway 52 intersects or "breaks through," so to speak, a continuation 22a of the mechanism-receiving channel 22 and which opens into the space enclosed by the trigger-guard and the adjacent portions of the trigger-plate 20 proper, as is especially well apparent in Fig. 8.

Each of the respective opposite ends of the safety-slide 51 is preferably knurled or otherwise roughened to provide an anti-slip surface for the finger of the user of the firearm in which the present invention is incorporated, and one of the said ends is formed with a diametrical slot or kerf 53 designed for the reception of a coin or screwdriver in a manner and for the purpose as will hereinafter appear. About midway between its respective opposite ends, the safety-slide 51 is formed with a clearance-notch 54 which is slightly wider than the width of the stop-finger 50 of the trigger 46, and which is adapted to freely receive the said stop-finger when the safety-slide 51 is in all save one of its three different positions, as will hereinafter appear.

The safety-slide 51 is adapted to assume three different positions as will more fully appear from the following, one normal position (Figs. 2 and 3) in which the safety-slide permits the free unhindered operation of the trigger 46 to effect the release of the hammer 25 and which position, for convenience of description, will be referred to herein as the "normal firing position," and from which position the safety-slide is readily shiftable by an axial movement thereof.

Another position which the safety-slide 51 may assume, is a position in which it permits the free movement of the trigger 46 but from which it cannot be readily shifted save by a special unlocking movement of the said safety-slide. This latter position will, for convenience of description, be designated as the "locked firing position" and it is the position in which the said safety-slide is shown in Figs. 6, 7 and 8.

The third position into which the safety-slide 51 is adapted to be moved, is one in which its clearance-notch 54 is moved out of full registration with the stop-finger 50 of the trigger 46, and in which position the said safety-slide prevents the normal full releasing movement of the trigger 46, as is illustrated in Figs. 4 and 5. The position of the safety-slide 51 as just referred to, will,

PR 0047

ET50225

for the convenience of description, be herein designated as the "safe position."

In the portion of its periphery which is substantially opposite the clearance-notch 54, the safety-slide 51 is formed with an L-shaped groove generally designated by the reference character 55. The said L-shaped groove includes one arm 56 which extends in substantial parallelism with the longitudinal axis of the safety-slide and a second arm 57 extending in a circumferential direction, as is especially well shown in Fig. 9. Adjacent the outer end of the arm 56 of the slot 55, the bottom wall thereof is formed with a conical detent-pocket 58. The bottom wall at the outer end of the arm 57 of the L-shaped slot 55 is, in turn, formed with a conical detent-pocket 59. At the junction of the respective arms 56 and 57, the bottom wall of the L-shaped slot 55 is formed with a conical detent 60.

Each of the detent-pockets 58, 59 and 60 is adapted to receive in turn the spherically-contoured inner end of a detent-nose 61 having substantially-cylindrical side-walls and extending downwardly from the underside of a detent-plunger 62. The said detent-plunger is adapted to reciprocate in a passage 63 which at its lower end intersects the transverse guideway 52 of the safety-slide 51 and which extends upwardly at a slightly-rearwardly-inclined angle through the upper face of the trigger-plate 20. Threaded into the upper end of the passage 63 is a retaining-screw 64 against the under face of which presses the upper end of a helical detent-spring 65. The lower end of the detent-spring 65, just referred to, presses against the upper face of the detent-plunger 62 and serves to yieldingly seat the spherically-contoured lower end of the detent-nose 61 into whichever one of the three detent-pockets 58, 59 or 60 happens at the time to be in registration with the said detent-nose.

When, as is shown in Figs. 2 and 3, the detent-nose 61 of the detent-plunger 62 is seated in the detent-pocket 58 of the safety-slide 51, the said safety-slide will be in its normal firing-position in which its clearance-notch 54 is in full registration with the stop-finger 50 of the trigger 46. Under these conditions a rearward draft exerted upon the finger-piece 49 of the trigger 46 will swing the same about the pivot-pin 47 to a degree sufficient to elevate the stop-finger 50 into the clearance-notch 54 in the safety-slide 51, this movement will cause the bottom wall of the channel 45 in the trigger 46 to engage with and lift the transmitting-lug 48 of the transmitting-member 43. When the transmitting-lug 48 is lifted as just described, the entire transmitting-member 43 will be swung in a counter-clockwise direction (Fig. 1) about its pivot-pin 44 and will thereby rock the sear 37 in a clockwise direction to disengage the sear-nose 38 from the cocking-abutment 35 of the hammer 25. When the sear-nose 38 is disengaged as just described the hammer-spring 36 will assert itself and cause the said hammer 25 to swing rapidly in a clockwise direction about its pivot-pin 24 to strike the firing-plunger 26 in a manner common in firearms, to effect the discharge of the firearm of which it forms a feature.

Should it be desired to render the firearm safe by blocking the normal free action of the trigger 46 or other member of the firing mechanism, the safety-slide 51 may be pressed axially from left to right to cause the detent-nose 61 of the detent-plunger 62 to ride out of the detent-pocket 60 in the said safety-slide and into the detent-pocket 58 thereof as is shown in Figs. 4 and 5. This axial shifting of the safety-slide 51 will also shift the clearance-notch 54 of the safety-slide out of full registration with the stop-finger 50 of the trigger 46 and will interpose a portion 66 of the said safety-slide into the path of movement of the said stop-finger 50. The portion 66 of the safety-slide partakes in external dimensions of the full diameter of the said safety-slide so that but a very slight movement of the trigger 46 (insufficient to release the hammer 25) may take place before the said trigger is brought to a positive halt by the engagement of the stop-finger 50 with the under face of the portion 66 of the safety-slide 51.

When the safety-slide 51 is in its normal firing-position as indicated in Figs. 2 and 3 of the drawings, it is possible for the said safety-slide to become inadvertently shifted into its safe position as indicated in Figs. 4 and 5. Such inadvertent shifting of the safety-slide would render inoperative the firearm in which it is incorporated and the marksman, when expecting to fire at a fast moving target, would find that the firearm is useless at such time. To guard against such a happening as has just been referred to, the marksman may, by inserting a coin or the like in the kerf 53 of the safety-slide 51, rotate the said safety-slide in a clockwise direction from the position in which it is shown in Figs. 2 and 3 into the position in which it is shown in Figs. 6, 7 and 8. This turning movement of the safety-slide 51 will bring the detent-pocket 59 adjacent the outer end of the peripherally-extending arm 57 of the L-shaped groove 55, into registration with the detent-nose 61 of the detent-plunger 62. When the slide is in the position now being discussed it may be readily reversely turned but is prevented from being shifted from left to right into its safe position shown in Figs. 4 and 5 owing to the depth of the left side-wall of the arm 57. Thus, the safety-slide 51 is locked against being reciprocated inadvertently into its safe position.

From the foregoing it will be seen that by means of the present invention the safety-slide may be reciprocated into and out of a safe position and a normal firing-position, but that when desired a turning movement in a clockwise direction of the said safety-slide will effectively lock the safety-slide against being inadvertently reciprocated into its safe position. The unlocking of the safety-slide 51 may, however, be effected conveniently by the deliberate act of turning the said safety-slide in a counterclockwise direction to restore it to its normal position in which it may be reciprocated back and forth into and out of its safe position and its normal firing-position.

The invention may be carried out in other specific ways than those herein set forth without departing from the spirit and essential characteristics of the invention, and the present embodiments are, therefore, to be considered in all respects as illustrative and not restrictive, and all changes coming within the meaning and equivalency range of the appended claims are intended to be embraced therein.

I claim:

1. A firearm structure including in combination: a firing mechanism; a safety-member mounted for movement back and forth longitudinally of itself and back and forth in a direction transversely of itself into and out of position to be engaged by a portion of the said firing-

PR 0048

ET50226

mechanism to prevent the normal operation thereof; detent-means constructed and arranged to yieldingly hold the said safety-member against both longitudinal and transverse movement; and locking-means for holding the said safety-member in a given one of its positions.

2. A firearm structure including in combination: a firing mechanism; a safety-member mounted for reciprocation and oscillation and having a portion movable into and out of position to be engaged by a portion of the said firing mechanism to prevent the normal operation thereof; detent-means constructed and arranged to yieldingly hold the said safety-member against both turning movement and reciprocating movement; and locking-means having a portion movable by the oscillating movement of the said safety-member into and out of position and to lock the said safety-member in a given one of its positions.

3. A firearm structure including in combination: a firing mechanism; a cylindrically-contoured safety-slide mounted for reciprocation and oscillation into and out of position to be engaged by a portion of the said firing mechanism to prevent the normal operation thereof; detent-means constructed and arranged to yieldingly hold the said cylindrically-contoured safety-slide against both turning movement and reciprocating movement; and locking-means having a portion movable by the oscillating movement of the said cylindrically-contoured safety-slide into and out of position to lock the said cylindrically-contoured safety-slide in a given one of its positions.

4. A firearm structure including in combination: a firing mechanism; a safety-member mounted in the firearm structure with capacity for longitudinal reciprocation and transverse turning movement and provided with a clearance-notch movable into and out of registration with a portion of the said firing mechanism to respectively free the said firing mechanism for normal operation and to lock the same against normal operation; detent-means constructed and arranged to yieldingly hold the said safety-member against both turning movement and reciprocating movement; and locking-means having a portion movable by the oscillating movement of the said safety-member into and out of position to lock the said safety-member in a given one of its positions.

5. A firearm structure including in combination: a firing mechanism; a safety-member mounted in the firearm structure with capacity for longitudinal reciprocation and transverse turning movement and provided with a clearance-notch movable into and out of registration with a portion of the said firing mechanism to respectively free the said firing mechanism for normal operation and to lock the same against normal operation; detent-means constructed and arranged to yieldingly hold the said safety-member against both turning movement and reciprocating movement; and locking-means having a portion facing crosswise of the longitudinal axis of the said safety-member and movable by the oscillating movement of the said safety-member into and out of position to lock the said safety-member against longitudinal reciprocation.

6. A firearm structure including in combination: a firing mechanism; a safety-member mounted in the firearm structure with capacity for longitudinal reciprocation and transverse oscillation and having a portion movable into and out of position to be engaged by a portion of the said firing mechanism to prevent the normal operation thereof, the said safety-member being formed with a substantially-L-shaped slot one arm of which extends in substantial parallelism with the longitudinal axis of the safety-member and the other arm of which slot extends substantially transversely thereof; and a member carried by the firearm structure and projecting into the L-shaped slot thereof to restrict the reciprocating and oscillating movements of the said safety-member.

7. A firearm structure including in combination: a firing mechanism; a safety-member mounted in the firearm structure with capacity for longitudinal reciprocation and transverse turning movement and provided with a clearance-notch movable into and out of registration with a portion of the said firing mechanism to respectively free the said firing mechanism for normal operation and to lock the same against normal operation, the said safety-member being formed with a substantially-L-shaped slot having one arm extending in substantial parallelism with the longitudinal axis of the safety-member and having the other arm of the said slot extending transversely thereof; and a member carried by the firearm structure and projecting into the substantially-L-shaped slot thereof to restrict the reciprocating and oscillating movements of the said safety-member.

8. A firearm structure including in combination: a firing mechanism; a safety-member mounted in the firearm structure with capacity for longitudinal reciprocation and transverse oscillation and having a portion movable into and out of position to be engaged by a portion of the said firing mechanism to prevent the normal operation thereof, the said safety-member being formed with a substantially-L-shaped slot, one arm of which extends in substantial parallelism with the longitudinal axis of the safety-member and the other arm of which slot extends transversely thereof, the said safety-member also being formed in the bottom of the substantially-L-shaped slot therein with three detent-pockets, one of which is located at the junction point of the two arms of the said slot and the other two detent-pockets being respectively located adjacent the outer ends of each of the respective arms thereof; and a spring-pressed detent projecting into the substantially-L-shaped slot in the said safety-member into position to be sequentially engaged with the three detent pockets therein as the said safety-member is moved.

9. A firearm structure including in combination: a firing mechanism; a safety-member mounted in the firearm structure with capacity for longitudinal reciprocation and transverse turning movement and provided with a clearance-notch movable into and out of registration with a portion of the said firing mechanism to respectively free the said firing mechanism for normal operation and to lock the same against normal operation, the said safety-member being formed with a substantially-L-shaped slot having one arm extending in substantial parallelism with the longitudinal axis of the safety-member and having the other arm of the said slot extending transversely thereof, the said substantially-L-shaped slot being formed in its bottom wall with three detent-pockets, one of which is located at the junction point of the two arms of the said slot and the other two detent-pockets being respectively located adjacent the outer ends of each of the respective arms thereof; and a spring-

PR 0049

ET50227

pressed detent projecting into the substantially-L-shaped slot in the said safety-member into position to be sequentially engaged with the three detent-pockets therein as the said safety-member is moved.

10. A firearm structure including in combination: a trigger-plate provided with a loop-like trigger-guard and with a transverse cylindrically-contoured guideway communicating laterally with the space within the trigger-guard of the said trigger-plate; a trigger carried by the said trigger-plate and having a portion extended into the loop-like trigger-guard thereof; a cylindrically-contoured safety-slide mounted in the transverse guideway in the said trigger-plate with capacity for both reciprocation and oscillation therein and having a portion movable into and out of position to be engaged by a portion of the said trigger to prevent the normal operation thereof; and locking-means having a portion shiftable by the oscillating movement of the said cylindrically-contoured safety-slide into and out of position to lock the said safety-slide in a given one of its positions.

11. A firearm structure including in combination: a trigger-plate provided with a loop-like trigger-guard and with a transverse cylindrically-contoured guideway communicating laterally with the space within the trigger-guard of the said trigger-plate; a trigger carried by the said trigger-plate and having a portion extended into the loop-like trigger-guard thereof; a cylindrically-contoured safety-slide mounted in the transverse guideway in the said trigger-plate with capacity for both reciprocation and oscillation therein and having a portion movable into and out of position to be engaged by a portion of the said trigger to respectively prevent and permit the normal operation thereof, the said safety-slide being formed with a substantially-L-shaped slot having one arm extending in substantial parallelism with the longitudinal axis of the safety-slide and the other arm of which extends substantially transverse thereof; and a member carried by the said trigger-plate and projecting into the L-shaped slot in the said safety-slide to limit both the oscillating and reciprocating movements of the said safety-slide.

CHARLES E. BLIZARD.

PR 0050

ET50228

8

PR 0051

ET50229

United States Patent [19]

Perlotto

[11] 3,882,622

[45] May 13, 1975

[54] LOCKING MEANS FOR FIREARMS

[76] Inventor: George T. Perlotto, 22630 Overlake Ave., St. Clair Shores, Mich. 48080

[22] Filed: July 16, 1973

[21] Appl. No.: 379,881

[52] U.S. Cl. ..... 42/1 LP

[51] Int. Cl. F41c 17/08

[58] Field of Search ..... 42/1 LP

[56] References Cited

UNITED STATES PATENTS

633,939	9/1899	Ackerman	42/1 LP
2,945,316	7/1960	Mulno	42/1 LP
3,553,877	1/1971	Welch et al.	42/1 LP
3,673,725	7/1972	Cravener	42/1 LP

Primary Examiner—Benjamin A. Borchelt
Assistant Examiner—C. T. Jordan

[57] ABSTRACT

A locking means for firearms operable by means of a key operated cam. The purpose being that only the person holding the proper key to the firearm can release the safety lever from its locking position.

4 Claims, 8 Drawing Figures

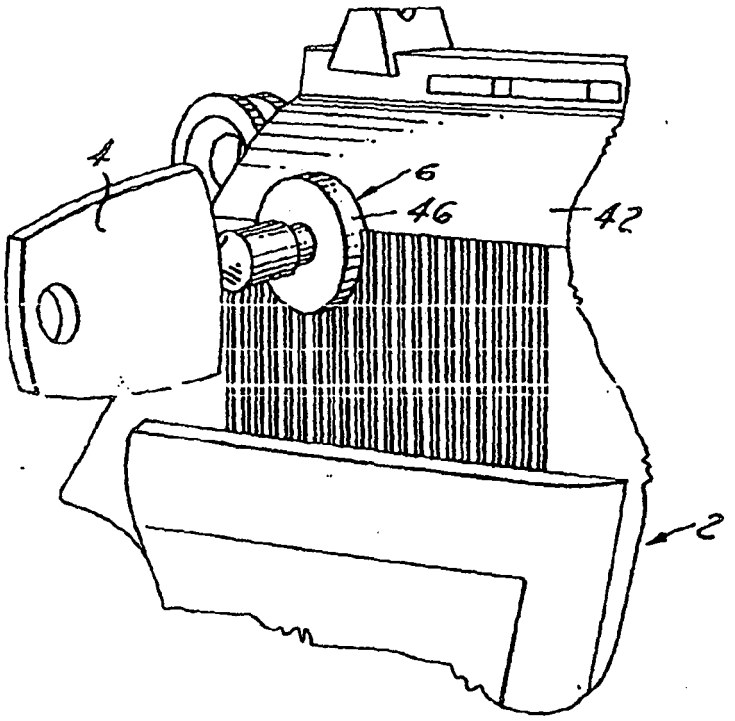

PR 0052

ET50230

FIG.1

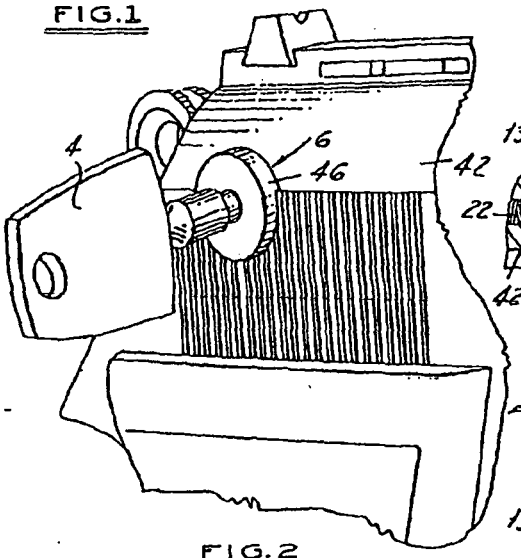

FIG.5

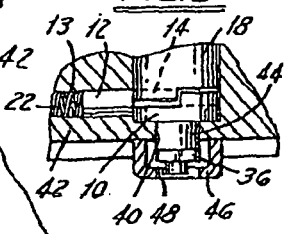

FIG.6

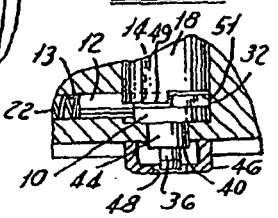

FIG.2

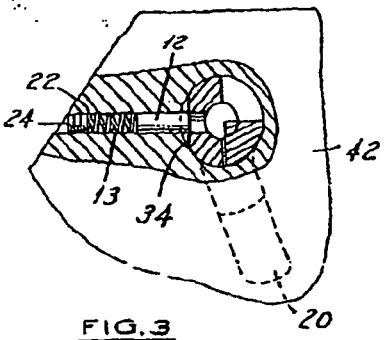

FIG.7

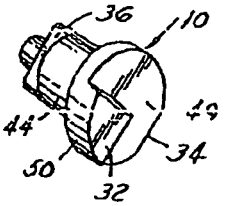

FIG.3

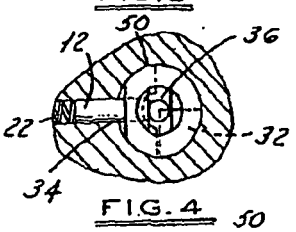

FIG.8

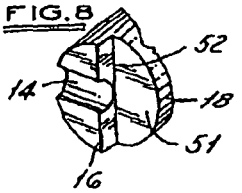

FIG.4

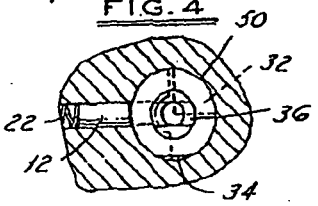

PR 0053

ET50231

LOCKING MEANS FOR FIREARMS

SUMMARY OF THE INVENTION

The invention relates to a means for locking a firearm by means of a key. The purpose being that the person with the proper key could release the "safety position" of the firearm, or lock the firearm, thus preventing accidental shooting of the firearm.

FIG. 1 shows thhe upper handle and hammer end of an automatic pistol.

FIG. 2 shows a partly cross-sectional view of the locking plunger pin and spring.

FIG. 3 shows a cross-sectional view of the locking plunger pin in contact with the locking plunger cam in locking position.

FIG. 4 shows a cross-sectional view of the locking plunger pin in contact with the locking plunger cam in an unlocking position.

FIG. 5 is a top cross-sectional view of FIG. 4 showing the locking plunger pin in an unlocking position.

FIG. 6 is a top cross-sectional view of FIG. 3 showing the locking plunger pin in a locking position.

FIG. 7 is a perspective view of the locking cam.

FIG. 8 is a perspective view of the safety lever trunnion.

DETAILED DESCRIPTION

FIG. 1 shows perspective view of the rear upper handle end of an automatic pistol 2. A key 4 is shown inserted into the locking means 6 which controls the rotational movement of a locking cam 10, shown in FIG. 7, allowing the locking plunger 12, shown in FIG. 2, FIG. 3, FIG. 4, FIG. 5, and FIG. 6 to be moved in locking recess 14 of half-circular shoulder portion 16 of shaft 18 of safety lever 20.

As shown in FIG. 2, the locking plunger pin 12 is slidable within a bore 13 and held against the locking cam 10 and semi-circular shoulder portion 16 by spring 22. A threaded plug 24 is inserted in the bore to allow removal, however, it is to be understood that other permanent plug means can be inserted as a plug to prevent withdrawal of the locking plunger pin. It is to be further understood that a square bore instead of a round bore and a square pin instead of a round pin is adaptable to this device.

While FIG. 7 shows the locking cam 10 and FIG. 3 and FIG. 6 shows the locking cam 10 in its un-locked position and locked position, respectively. The locking cam 10 consists of a segmented quarter section 32 which is rotated ninety degrees as shown in FIG. 5 and FIG. 6. It includes a surface portion 49 which abuts the semi-circular surface portion 51 of shaft 18 of safety lever means. The cam 10 includes a flat edge 34 on surface portion 50 which is parallel to flat-sided extension 36. Extension 36 is a lock contacted by key 4 and turned by the sides of the key from a locked position to an un-locked position and vice-versa. The quarter section 32 is adapted to move within the recess 52 depending on whether the safety lever of the pistol is to be locked or un-locked. The cam 10 is placed in position when a bore 40 is drilled in the slide 42 and either press-fitted in position or secured by other conventional means, e.g. brazing, welding or soldering at shaft portion 44. A retaining cap 46 is secured to the slide 42 by conventional means, and includes a bore 48 which allows entry of key 4 to turn cam 10 to lock or un-lock the safety lever.

In operation, viewing FIG. 3 and FIG. 6, shows the locking plunger pin 12 against edge 34 of locking cam 10, allowing plunger pin 12 to fit into locking recess 14, thereby preventing the safety lever 20 to be removed from the "safety position" of the firearm as shown in FIG. 2.

To unlock the safety lever, key 4 is inserted into retaining cap 46 and connected to extension 36 of locking cam 10, and rotated 90°, thus moving locking cam 10 90°, thereby allowing position of segmented quarter section 32 to move 90° as shown in FIG. 4 and FIG. 5. Movement of locking cam 10 moves the flat edge 34 90°, thus allowing the circumferential surface portion 50 of cam 10 to move the locking plunger pin 12 to move back out of the locking recess 14 of shaft 18 of safety lever 20. As shown in FIG. 5, with the locking plunger pin 12 out of position of preventing rotation of safety lever shaft 18, safety lever 20 can be partially turned or partially rotated to release the "safety lever" from its locked position to its un-locked position.

The firearm can now be fired.

While it will be apparent that the embodiment of the invention herein disclosed is well calculated to fulfill the objects above stated, it will be appreciated that the invention is not necessarily limited to pistols, but could be adapted to revolvers, rifles, shot guns and other firearms; and further susceptible to modification, variation and change.

I claim:

1. A locking mechanism for a firearm comprising a safety lever, means for locking said safety lever with a key operable lock, a locking cam having a cam surface, a proper key to rotate said lock and locking cam, a locking plunger whereby movement of the locking cam moves said locking plunger releasing said safety lever, said locking cam having a key operable lock at one end whereby said locking cam is rotated when the proper key is inserted and turned.

2. The invention as described in claim 1 in which said locking cam includes a flat cam surface portion and a curved cam surface portion.

3. A locking mechanism as set forth in claim 1 wherein said locking plunger includes a locking plunger pin and spring, said spring biasing the locking plunger pin against said cam surface portions.

4. A locking mechanism as set forth in claim 1 wherein said safety lever includes a shaft extending from said safety lever, the end of said shaft including a flat semi-circular shoulder surface portion abutting one end of the locking cam, said semicircular shoulder surface portion having a recess portion extending radially whereby said locking plunger is adapted to move in said recess portion of said shoulder surface portion to prevent rotation of said safety lever, thus locking the firearm.

* * * * *

PR 0054

ET50232

9

PR 0055

ET50233

United States Patent [19]

Brush

[11] 4,133,128

[45] Jan. 9, 1979

[54] SAFETY DEVICE FOR RIFLES

[76] Inventor: Clyde E. Brush, P.O. Box 222, Delta, Utah 84624

[21] Appl. No.: 825,601

[22] Filed: Aug. 18, 1977

[51] Int. Cl.² F41C 17/08

[52] U.S. Cl. ..... 42/70 R; 42/70 F; 39/143

[58] Field of Search ..... 42/70 R, 70 C, 70 D, 42/70 E, 70 F; 89/143, 148, 149, 154

[56] References Cited

U.S. PATENT DOCUMENTS

853,073	5/1907	Esser	42/70 R
1,786,536	12/1930	Holck	89/143

Primary Examiner—Charles T. Jordan
Attorney, Agent, or Firm—B. Deon Criddle

[57] ABSTRACT

A safety device for rifles that will hold the breechblock thereof in a locked, open position, after firing, for so long as the firing pressure on the trigger is maintained. The safety device also utilizes the rifle safety actuator to hold the breechblock in its locked open position when the actuator is in its "safe" position or to release the breechblock after the rifle safety actuator has been placed in its "fire" position and the trigger pressure has been released. Normal operation of the rifle safety actuator is not affected.

5 Claims, 4 Drawing Figures

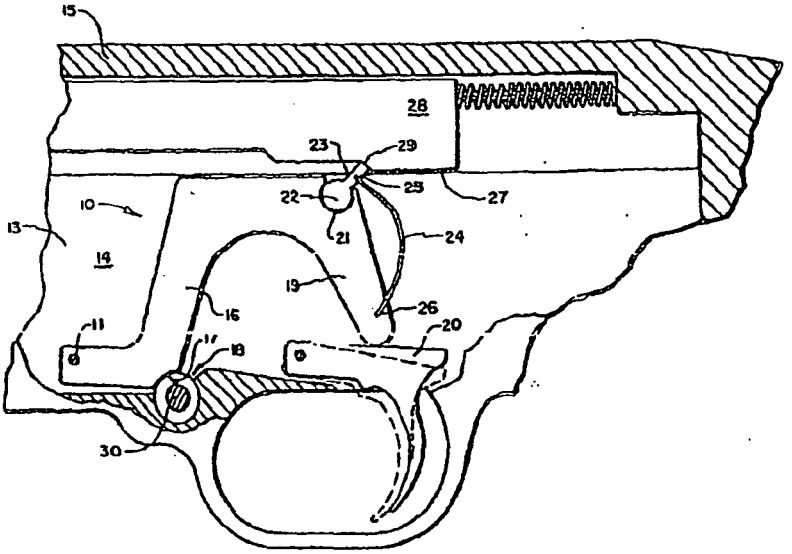

PR 0056

ET50234

FIG. 1

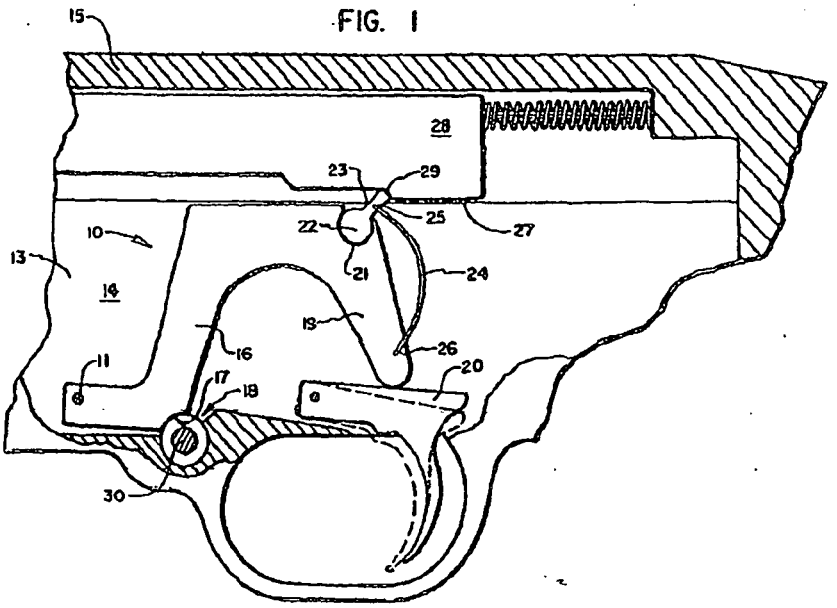

FIG. 2

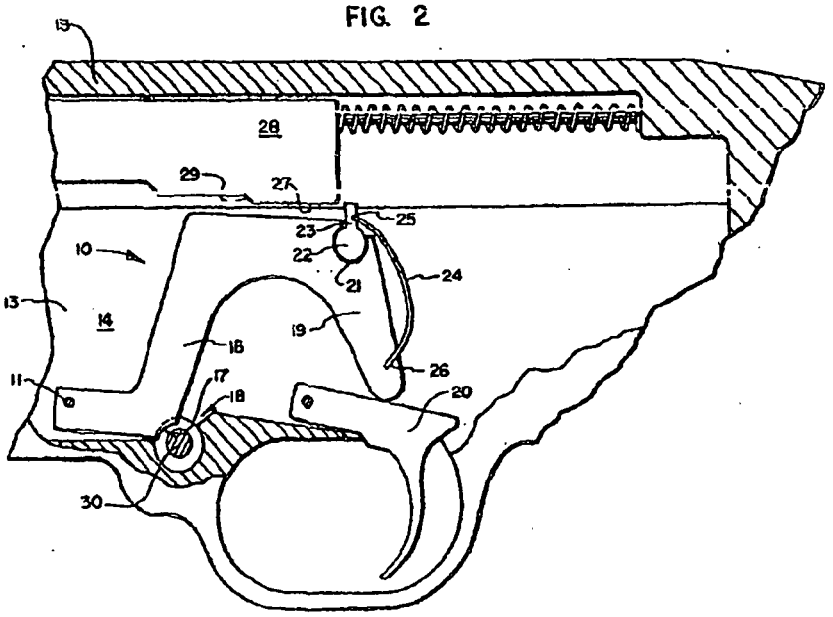

PR 0057

ET50235

United States Patent Office

3,526,332

Patented Sept. 1, 1970

1

3,526,332

LOCKING TAMPER-RESISTANT VIAL

William H. Adelberger, 3823 Shannon Road,
Cleveland Heights, Ohio 44118

Filed Mar. 24, 1969, Ser. No. 809,832
Int. Cl. A61t 1/00; B65d 55/12
U.S. Cl. 215—9 6 Claims

ABSTRACT OF THE DISCLOSURE

A container is provided with a closure member which is difficult for a child to remove, the open neck portion of the container and the closure member being threaded. The threads of the container are interrupted along a line parallel with the axis of the open neck portion and the closure member is fitted with a vertical pin within the internal periphery of the closure member. This pin serves to prevent rotation of the closure member, thus locking it. To remove the closure cap, one must first adjust the pin so that it no longer prevents rotation of the closure member, then unscrew the closure member.

This invention relates to containers and closures therefor.

Many substances for domestic use are potentially dangerous to children. For example, many medicines would be dangerous if taken by children, as would many cleaning materials. These substances normally are stored in containers, and it is necessary to keep these containers in places inaccessible to children. When such a substance is being used, however, it usually is necessary for an adult to watch that children do not obtain access to the substance in the container. Should the person be unexpectedly called away, as for example when the telephone or door-bell rings, a child may be left alone with the container and inadvertently do himself some harm. By means of the present invention there is provided a container and a closure cap therefor which can easily be opened and closed by an adult, but which is quite difficult, perhaps even impossible, for a child to open, so that if a child is left with such a closed container he is unlikely to be able to open it. The closure and container which are the subject of this invention are not restricted to use in conjunction with substances which are potentially dangerous to children, but may be used in conjunction with other substances as well. They may be used both for liquids and solids.

According to the present invention, there is provided a locking tamper-resistant vial comprising the combination of a closure member and a container with a cylindrical open neck portion said neck portion having external threads, said external threads being interrupted along a line parallel with the axis of said open neck portion, said closure member having internal threads adapted to receive and engage the external threads of said open neck portion, said closure member containing as a vertical insert within the internal periphery thereof a pin, said pin adapted to fit snugly against the adjacent surface of said closure member and against the unthreaded portion of the otherwise threaded surface of the neck portion and when in locked position to prevent rotation of said closure member.

The invention is based in part on the observation that while young children may be capable of unscrewing a cap from a container, the requirement that some additional step be performed will be a sufficient obstacle as to prevent the child from removing a closure cap from a container. The very fact that two separate manipulations are required is in itself a considerable problem for a child, and the additional fact that two such manipulations must be performed in order and in a particular manner renders the combined closure member and container a safe repository for medicines and the like where children must be reckoned with.

2

These and other advantages of the invention may be readily understood by reference to the accompanying drawings in which:

FIG. 1 is a side view of the cylindrical open neck portion of a container, showing the vertical interruption of the threads of that portion.

FIG. 2 is a perspective view of the same open neck portion.

FIG. 3 is a vertical sectional view of the open neck portion of such a container onto which a closure cap has been screwed.

FIG. 4 is a fragmentary horizontal sectional view of a closure cap showing an alternative oval shape, rather than the usual circular shape.

FIG. 5 shows a locking pin.

FIG. 6 is a vertical sectional view which shows the pin of FIG. 5 inserted into a closure cap which is screwed on to the open neck portion of a container.

FIG. 7 shows a locking pin similar to that of FIG. 5 except that it is adapted to be pushed rather than pulled into unlocked position.

FIG. 8 is a vertical sectional view which shows the locking pin of FIG. 7 inserted into a closure cap which has been screwed on to the open neck portion of the container.

FIG. 9 is a vertical sectional view which shows a third type of locking pin inserted into a closure cap which has been screwed onto the open neck portion of a container.

FIG. 10 is a vertical sectional view which shows still another type of locking pin inserted into a closure cap which has been screwed onto a container.

FIG. 11 shows a fifth type of locking pin, differing from that shown in FIG. 10 merely in that it is intended to be pushed rather than pulled into unlocking position.

Referring to FIG. 6, it will be seen that the pin 1 can be of any cross-sectional shape, i.e., square, circular, etc., it being necessary only that the portion 2 thereof which is adjacent the unthreaded portion 3 of the otherwise threaded surface 4 of the neck portion be of such configuration as to interfere with such threaded surface to prevent rotation of the cap 5. It may, for example, be of arcuate shape conforming to the arc of the circular cap and presenting a maximum area of contact with the unthreaded portion of the container neck. As shown in the drawing the locking portion of the pin traverses only a part of the threaded area of the container; it may extend over even less of the threaded area, it being necessary only that it interfere with one of the threads to secure an effective locking result, and on the other hand, it may extend across the entire threaded area of the container. As shown, the pin extends beyond the locking portion in the form of a narrower leg 6 which acts to stabilize the pin in locking position. To unlock the cap the pin must be lifted until it no longer interferes with the rotation of the cap. The lifting of the pin is facilitated by providing a small depressed area 7 in the top surface 8 of the cap surrounding the opening 9 into which the pin fits. Also, the pin is fitted with two retention lugs 10 and 11 spaced apart which fit into corresponding recesses 12, 13 and 14 in the interior surface of the opening 9 into which the pin fits. There are three such recesses into which these retention lugs may fit and these are spaced vertically at such intervals that the lower two of them will hold the pin in locking position whereas the upper two of them will hold the pin in unlocked position.

The locations of the opening in the cap into which the pin fits and of the unthreaded portion of the container

PR 0058

ET50236

neck are such that they meet when the cap is screwed tightly onto the container neck.

Thus, to lock the cap of FIG. 6 one merely screws it on to the container neck, then inserts the locking pin as far as it will go. To unlock it, one withdraws it at least until the retention lugs engage the top two corresponding recesses.

Referring to FIG. 8, it will be noted that the pin 15 is essentially the same as that shown in FIG. 6 except that the pin must be pushed up from the bottom 16 to put it in unlocked position. This permits a more orderly appearance of the top surface of the cap since it is unnecessary to provide means, e.g., a screw slot in the pin or a depressed area in the cap surrounding the pin, for rotating the pin from the top. As before, the pin is maintained in locked and unlocked positions by means of retention lugs and corresponding recesses.

Referring to FIG. 9, it will be seen that the pin 17 is so constructed as to remain within the cap at all times, it being unnecessary to remove it to unlock the cap. A portion 18 of the circumference of the lower part of the pin is threaded and the pin is rotatable within the cap, so that when the threads of the pin are presented to the container, the container is free to rotate with respect to the cap. As shown, the pin is in unlocked position. On the other hand, when the threaded portion of the pin is faced in the opposite direction, the pin acts to obstruct rotation by interfering with the threads of the container, i.e., the pin, in this position, can fit only with the unthreaded portion of the container surface. Rotation of the pin may be effected by means of a graspable protrusion from the top surface thereof, or a screw slot in the otherwise flat top surface. The drawing shows an arc slot 19 which will accommodate a coin. A turn limit lug 20 comprising a portion of the top surface of the pin is free to rotate through an arc of 180 degrees in a recess 21 in the top surface of the container. In one extreme position of rotation the pin locks the cap whereas in the opposite extreme position it is in unlocking position. The pin is held in place with respect to vertical movement by means of a circumferential lug 22 which fits into a corresponding circumferential recess 23 within the cap.

Referring to FIG. 10, the pin in this instance is lifted from its locked position and then turned to unlocked position. It will be noted that the pin is partially threaded at its lower extremity 24, the threaded portion being engageable with the threaded portion 25 of the container and when so engaged permitting rotation of the cap with respect to the container. Otherwise, i.e., when not so engaged, the unthreaded lower portion 26 of the pin fits only with the unthreaded portion 27 of the container and prevents rotation of the cap with respect to the container by obstructing the threads of the container. The pin is shown in locked position. To unlock the cap the pin must be lifted at least until the uppermost thread of the pin is engageable with the uppermost thread of the container, and then turned so as to effect such engagement. A vertical turn limit lug 28 extending from the top of the pin downwardly fits into a corresponding recess 29 within the cap and limits rotation of the pin when it is in locked position. The extent to which the pin is lifted to unlock the cap is determined by the length of the downwardly extending turn limit lug and the pin must be lifted until the turn limit lug can be freed from the above recess. When it is so freed, then the pin is rotated so as to present the lower threads of the pin to the threads of the container; usually the extent of rotation is 180 degrees and is controlled by a turn limit lug stop. The pin is held in place by retention lugs which fit into corresponding retention lug recesses.

FIG. 11 shows a pin similar to that shown in FIG. 10 except that the pin must be pushed upward to an unlocked position, rather than be lifted up.

The container, cap and pin may be fabricated from glass, plastic, metal or the like, although plastic is preferred for reasons of economy and durability. The forms shown in the drawings are preferred, but it will be obvious to those skilled in the art that operative variations are possible and these are contemplated as being within the scope of the invention.

I claim:

1. A locking tamper-resistant vial comprising the combination of a closure member and a container with a cylindrical open neck portion said neck portion having external threads, said external threads being interrupted along a line parallel with the axis of said open neck portion, said closure member having internal threads adapted to receive and engage the external threads of said open neck portion, said closure member containing as a vertical insert within the internal periphery thereof a pin, said pin adapted to fit snugly against the adjacent surface of said closure member and against the unthreaded portion of the otherwise threaded surface of the neck portion and when in locked position to prevent rotation of said closure member.

2. The locking tamper-resistant vial of claim 1 wherein a portion of the lower surface area of the pin is threaded.

3. The locking tamper-resistant vial of claim 1 wherein the pin is of circular cross section.

4. The locking tamper-proof vial of claim 1 wherein the pin is of arcuate cross section.

5. The locking tamper-proof vial of claim 1 wherein the lower portion of the pin extends below the lower surface of the cap so that the pin is thereby adapted to be pushed into an unlocking position.

6. The locking tamper-proof vial of claim 1 wherein the pin while in locked position is prevented from rotating by a turn limit lug which fits into a vertical recess in the closure member.

References Cited

UNITED STATES PATENTS

3,376,992	4/1968	Klapp	215—9
3,445,021	5/1969	Johnson	215—9

GEORGE T. HALL, Primary Examiner

PR 0059

ET50237

10

PR 0060

ET50238

Sept. 1, 1970 W. H. ADELBERGER 3,526,332

LOCKING TAMPER-RESISTANT VIAL

Filed March 24, 1969 2 Sheets-Sheet 1

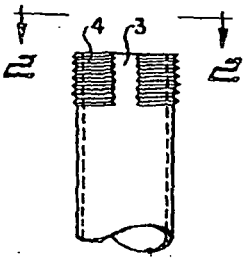

Fig. 1

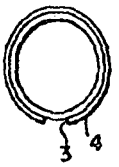

Fig. 2

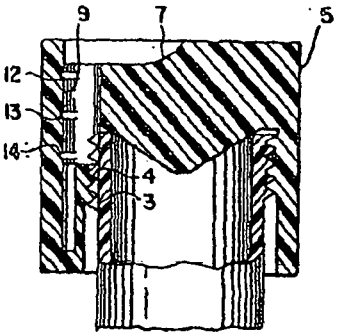

Fig. 3

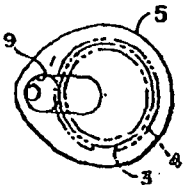

Fig. 4

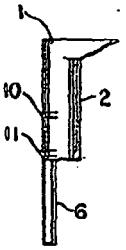

Fig. 5

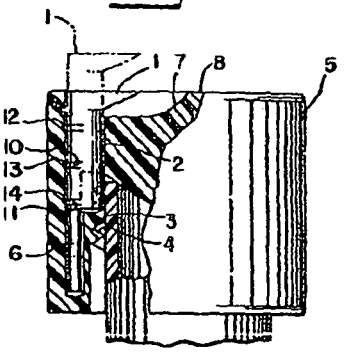

Fig. 6

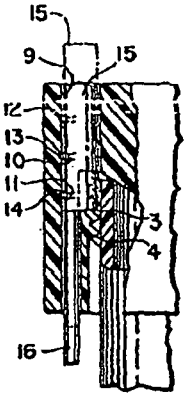

Fig. 8

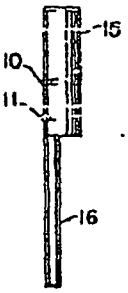

Fig. 7

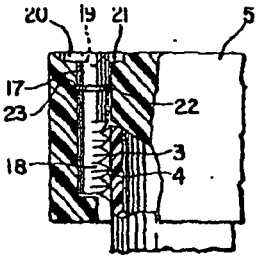

Fig. 9

INVENTOR

WILLIAM H. ADELBERGER

PR 0061

ET50239

Sept. 1, 1970 W. H. ADELBERGER 3,526,332

LOCKING TAMPER-RESISTANT VIAL

Filed March 24, 1969 2 Sheets-Sheet 3

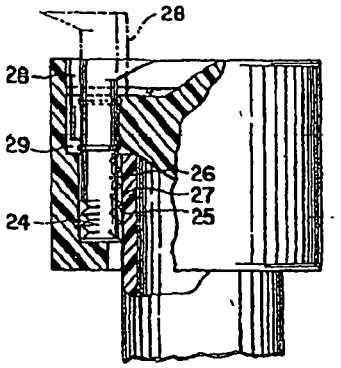

Fig. 10

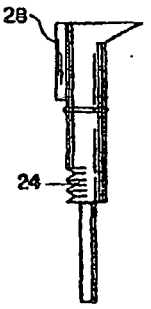

Fig. 11

INVENTOR
WILLIAM H. ADELBERGER

PR 0062

ET50240

Oct. 21, 1958 J. F. FISCHER 2,856,718

SAFETY MECHANISM FOR FIREARMS

Filed June 24, 1957 2 Sheets-Sheet 2

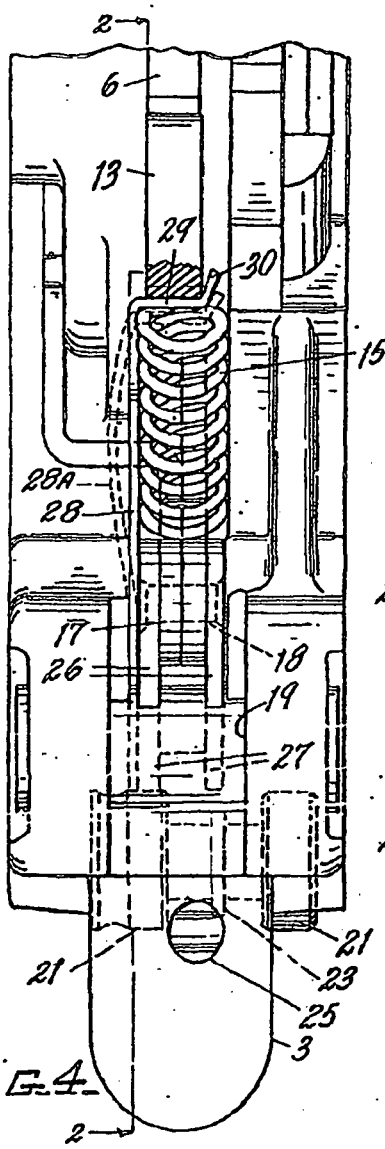

FIG. 4

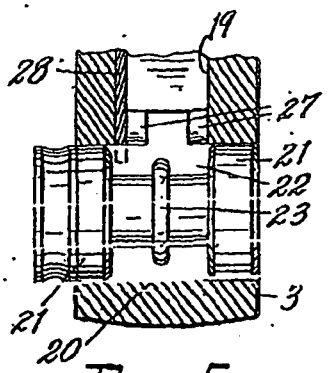

FIG. 5

INVENTOR.
Joseph F. Fischer
BY
Otto Earl
Attorney.

PR 0064

ET50242

Oct. 21, 1958 J. F. FISCHER 2,856,718

SAFETY MECHANISM FOR FIREARMS

Filed June 24, 1957 2 Sheets-Sheet 1

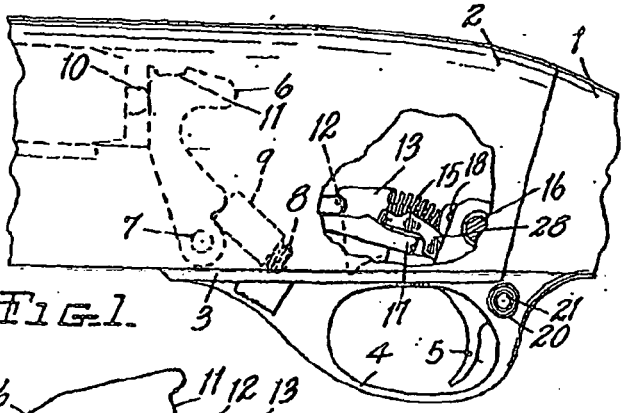

FIG. 1.

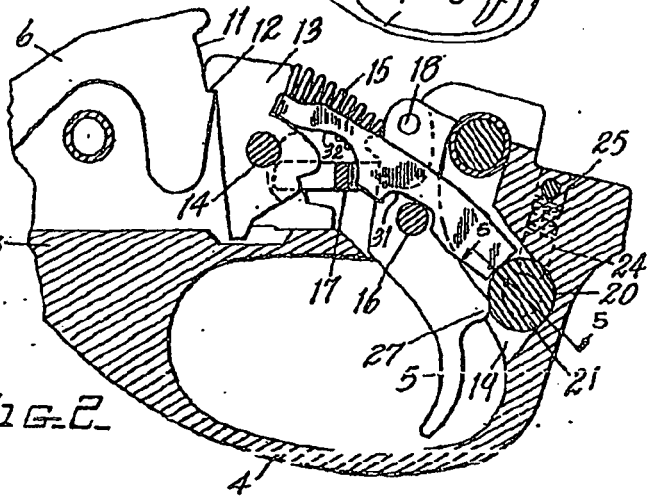

FIG. 2.

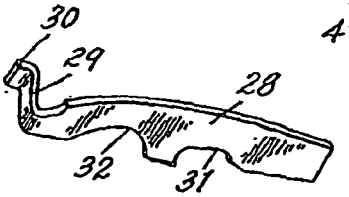

FIG. 3.

INVENTOR
Joseph F. Fischer
BY
Attorney.

PR 0065

ET50243

United States Patent Office

2,856,718

Patented Oct. 21, 1958

1

2,856,718

SAFETY MECHANISM FOR FIREARMS

Joseph F. Fischer, Grand Rapids, Mich.

Application June 24, 1957, Serial No. 667,405

14 Claims. (Cl. 42—70)

This invention relates to improvements in safety mechanism for firearms. The principal objects of this invention are:

First, to provide a simple and inexpensive attachment for firearms having only a trigger blocking safety that will positively lock the sear against hammer release when the trigger block safety is on.

Second, to provide a safety bar engageable between a hammer releasing member of a firearm and a selectively movable control member to prevent accidental release of the hammer.

Third, to provide a safety block for the hammer release member of a firearm that is sufficiently yieldable to accommodate cocking action of the release member under the strong camming action of the hammer but which is stiff enough resist inertia forces and shocks tending to move the hammer release member to released position.

Other objects and advantages of the invention will be apparent from a consideration of the following description and claims. The drawings of which there are two sheets illustrate a preferred form of the invention incorporated in a popular type of firearm.

Fig. 1 is a fragmentary side elevational view of a firearm with portions broken away to illustrate the safety of the invention applied to the trigger mechanism. The action is shown in fired position.

Fig. 2 is an enlarged fragmentary side elevational view of the safety and trigger mechanism shown in cocked and locked or safe position. Portions of the supporting trigger plate and housing are shown in cross-section along the plane of the line 2—2 in Fig. 4.

Fig. 3 is a perspective view of the safety attachment of the invention.

Fig. 4 is a fragmentary top plan view of the hammer and trigger assembly in cocked and safe locked position, a portion of the hammer being broken away in section.

Fig. 5 is a fragmentary cross-sectional view through the safety control member taken along the plane of the line 5—5 in Fig. 2 and showing the mechanism in unlocked firing position.

In the drawings 1 represents the stock and 2 the receiver of a firearm. A trigger plate 3 supports the hammer and trigger assembly and includes a guard 4 for the trigger 5. The hammer 6 is pivoted at 7 and spring biased by the hammer spring 8 and follower 9 to strike the firing pin 10. On its outer end the hammer 6 has a sear notch 11 engageable with the jaw 12 of a sear 13. The sear 13 is pivoted at 14 and biased by the sear spring 15 toward engaged, hammer holding position in the cocked condition of the action. The trigger 5 is pivoted at 16 and has the connector 17 pivotally connected thereto at 18. The connector 17 projects forwardly to act on the sear 13 below the sear pivot to move the sear jaw rearwardly to release the hammer and fire the piece. The sear spring 15 also acts against the trigger to bias the trigger to normal, unfired position.

Rearwardly of the trigger 5 the housing formed by the trigger plate is recessed as at 19 to receive the rear edge of the trigger. The housing is also transversely bored as at 20 to slidably receive the safety button 21. The button 21 is actually a blocking pin having annular grooves 22 in its mid-section (see Figs. 4 and 5) separated by a locating rib 23. The grooves form a shoulder on each end of the pin. The grooves and rib coact with a spring pressed pin 24 received in the bore 25 to locate the button. Fig. 4 shows the button 21 in "safety on" position where the back of the trigger strikes one of the shoulders and Fig. 5 illustrates the button in "safety off" position.

The top and rear side of the trigger 5 are bifurcated leaving upper arms 26 (see Fig. 4) between which the connector 17 is pivoted and stop ears 27 opposed to the safety button or blocking pin 21. One of the ears 27 is engageable with the safety button when the button is in "safety on" position as shown in Fig. 4. This blocks the trigger and prevents firing of the piece by pulling the trigger.

The foregoing structure will be recognized as the hammer and trigger assembly used on shot guns and rifles sold under the trademark "Remington."

While the blocking pin 21 prevents unintentional pulling of the trigger 5, it does not positively prevent accidental discharge of the firearm. As soon as the piece is cocked it may be discharged by rough handling or dropping or even by rapid actuation of the cocking mechanism (either pump action, lever action or automatic action not illustrated) before the chamber of the piece is fully closed and locked. The sear 13 is only held in cocked position by the relatively light sear spring 15. Sufficient shock or inertia force imparted in the correct direction to the mass of the sear will move the sear and discharge the piece. This condition is aggravated when the sear notch 11 and coacting jaw 12 become worn or are filed to provide "hair trigger" action.

The safety attachment of the invention consists of a thin strip or bar 28 of spring steel that is substantially stiff longitudinally but laterally springable when subjected to sufficient longitudinal loads. The bar 28 fits alongside of the trigger 5 and sear spring 15 and projects rearwardly in the slot 19 in opposed relation to the blocking pin 21. At its forward end the bar 28 has a laterally turned end 29 constituting an abutment that fits in a notch formed in the rear of the sear. A short retaining tab or tip 30 on the end portion 29 laps against the opposite side of the sear. The sear spring 15 thus prevents lateral displacement of the bar in one direction and the tip 30 prevents lateral displacement to the other. The forward end of the sear spring on its underside bears against the laterally turned abutment 29 and constantly biases the safety bar forwardly so that its rear end will not interfere with actuation of the blocking pin 21.

The safety bar 28 is easily installed merely by removing the sear spring 15 and slipping the rear end of the bar back in the recess 19 alongside of the trigger. The under edge of the bar 28 is notched as at 31 to clear the trigger pivot 16 and at 32 to clear the connector 17. The end abutment portion 29 falls in place in the notch in the sear and the spring 15 can then be replaced.

When the action is in cocked position with the blocking pin 21 "on" as shown in Figs. 2 and 4 the rigidity of the safety bar 28 prevents any inertia forces that may be set up in the sear, by dropping or bumping the piece, from moving the sear to hammer releasing position and the piece is totally safe. When the blocking pin is moved to "off" or firing position as in Fig. 5, the safety bar 28 may move rearwardly into the groove 22 as the top of the sear is retracted in normal firing operation. As previously noted the sear spring 15 holds the safety bar forwardly with the sear and prevents the safety bar from coming to rest in the groove 22 where it would interfere with

PR 0066

ET50244

movement of the safety button or pin 21 to "on" position.

Should the blocking pin 21 be moved to "on" position as in Fig. 4 while the action is in uncocked position and the action should thereafter be cocked, the outer end of the hammer will be retracted in a strong camming action on the top of the sear as in normal cocking operation. The safety bar 28 resists rearward movement of the sear as before but since cocking is effected by strong forces at multiplied mechanical advantage and with the strong camming action on the sear much stronger compressive forces are applied longitudinally on the safety bar than can be applied thereto by any inertia or shock force and the safety bar flexes laterally as appears at 28A in Fig. 4 to accommodate cocking movement of the trigger. In this condition of the action the strong spring action of the safety bar assists the sear spring 15 in firmly seating the sear jaw 12 in the sear notch 11 in the hammer and the piece is firmly locked in cocked, "safe" condition.

It will be noted that any spring acting to bias the safety bar forwardly in the trigger housing will cause the safety bar to function properly but the sear spring is a convenient spring already present in the assembly and can easily be used to accomplish the purpose.

Having thus described the invention what is claimed to be new and what is desired to be secured by Letters Patent is:

1. In combination with a firearm having a spring pressed hammer, a spring pressed sear releasably engageable with said hammer, a pivoted trigger, a connector coacting between said trigger and said sear to move said sear to hammer releasing position and a shouldered blocking pin movable into and out of blocking relation to said trigger, a safety lock comprising a thin lock bar of laterally springable steel disposed in crossing side by side relation to said trigger above the pivot of the trigger with its rear end in opposed relation to the blocking shoulder of said blocking pin when said blocking pin is actuated to trigger blocking position, said bar being notched on its under side to clear the pivot of said trigger, a laterally turned abutment on the forward end of said bar engaged with a notch in the rear of said sear in blocking relation to hammer releasing movement of said sear, and a forwardly projecting retaining tip on the end of said abutment lapped alongside of said sear, the sear spring bearing against said abutment adjacent the point of contact of the spring with the sear and the sear spring lying alongside said bar in laterally blocking relation thereto whereby the sear spring returns the blocking bar with the sear toward hammer locking position of the sear.

2. In combination with a firearm having a spring pressed hammer, a spring pressed sear releasably engageable with said hammer, a pivoted trigger, a connector coacting between said trigger and said sear to move said sear to hammer releasing position and a shouldered blocking pin movable into and out of blocking relation to said trigger, a safety lock comprising a thin lock bar of laterally springable steel disposed in crossing side by side relation to said trigger with its rear end in opposed relation to the blocking shoulder of said blocking pin when said blocking pin is actuated to trigger blocking position, a laterally turned abutment on the forward end of said bar engaged in blocking relation to hammer releasing movement of said sear, and a forwardly projecting retaining tip on the end of said abutment lapped alongside of said sear, the sear spring bearing against said abutment adjacent the point of contact of the spring with the sear and the sear spring lying alongside said bar in laterally blocking relation thereto whereby the sear spring returns the blocking bar with the sear toward hammer locking position of the sear.

3. In a firearm, a hammer, spring biased to firing position, a sear releasably engageable with said hammer to hold the hammer in cocked position, a spring biasing said sear toward hammer engaging position, means including a pivoted trigger arranged to move said sear against said spring to release the sear from the hammer, a first safety member having a portion selectively movable laterally into blocking engagement with said means including the trigger to prevent operation thereof, a second safety consisting of a bar positioned between said sear and said first safety member and abutted therebetween when said first safety member is in blocking position relative to said means including the trigger, said bar being laterally bendable under the force of the cocking action of said hammer on said sear, and means including a portion on said bar engaged by said sear spring biasing said bar forwardly with said sear so as not to interfere with movement of said first safety member.

4. In a firearm, a hammer, spring biased to firing position, a sear releasably engageable with said hammer to hold the hammer in cocked position, a spring biasing said sear toward hammer engaging position, means including a trigger arranged to move said sear against said spring to release the sear from the hammer, a first safety member having a portion selectively movable into blocking engagement with said means including the trigger to prevent operation thereof, a second safety consisting of a bar positioned between said sear and said first safety member and abutted therebetween when said first safety member is in blocking position relative to said means including the trigger, said bar being laterally bendable under the force of the cocking action of said hammer on said sear, and means biasing said bar forwardly with said sear so as not to interfere with movement of said first safety member.

5. In combination with a firearm having a spring pressed hammer, a sear releasably engageable with said hammer, a pivoted trigger, a connector coacting between said trigger and said sear to move said sear to hammer releasing position and a shouldered blocking pin movable into and out of blocking relation to said trigger, a safety lock comprising a thin lock bar of laterally springable material disposed in side by side relation to said trigger above the pivot of the trigger with its rear end in opposed relation to the blocking shoulder of said blocking pin when said blocking pin is actuated to trigger blocking position, a laterally turned abutment on the forward end of said bar engaged with a notch in the rear of said sear in blocking relation to hammer releasing movement of said sear, a forwardly projecting retaining tip on the end of said abutment lapped alongside of said sear, and a spring bearing against said abutment lying alongside said bar in laterally blocking relation thereto whereby the spring returns the blocking bar toward hammer locking position of the sear.

6. In combination with a firearm having a spring pressed hammer, a sear releasably engageable with said hammer, a pivoted trigger, a connector coacting between said trigger and said sear to move said sear to hammer releasing position and a shouldered blocking pin movable into and out of blocking relation to said trigger, a safety lock comprising a thin lock bar of laterally springable material disposed in side by side relation to said trigger with its rear end in opposed relation to the blocking shoulder of said blocking pin when said blocking pin is actuated to trigger blocking position, a laterally turned abutment on the forward end of said bar engaged with a notch in the rear of said sear in blocking relation to hammer releasing movement of said sear, a forwardly projecting retaining tip on the end of said abutment lapped alongside of said sear, and a spring bearing against said abutment whereby the spring returns the blocking bar toward hammer locking position of the sear.

7. In combination with a firearm having a spring pressed hammer, a spring pressed sear releasably engageable with said hammer, a pivoted trigger, a connector coacting between said trigger and said sear to move said sear to hammer releasing position and a blocking member movable into and out of blocking relation to said trigger, a

PR 0067

ET50245

safety lock comprising a lock bar of laterally springable material disposed in crossing side by side relation to said trigger with its rear end in opposed relation to the blocking member when said blocking member is actuated to trigger blocking position, an abutment on the forward end of said bar engaging said sear in blocking relation to hammer releasing movement of said sear, and a forwardly projecting retaining tip on the end of said abutment lapped alongside of said sear, the sear spring bearing against said abutment adjacent the point of contact of the spring with the sear and the sear spring lying alongside said bar in laterally blocking relation thereto whereby the sear spring returns the blocking bar with the sear toward hammer locking position of the sear.

8. In combination with a firearm having a spring pressed hammer, a spring pressed sear releasably engageable with said hammer, a pivoted trigger, a connector coacting between said trigger and said sear to move said sear to hammer releasing position and a blocking member movable into and out of blocking relation to said trigger, a safety lock comprising a lock bar of laterally springable material disposed with its rear end in opposed relation to the blocking member when said blocking member is actuated to trigger blocking position, the forward end of said bar engaging said sear in blocking relation to hammer releasing movement of said sear, the sear spring bearing against said bar adjacent the point of contact of the spring with the sear whereby the sear spring returns the blocking bar with the sear toward hammer locking position of the sear.

9. In a firearm, a hammer, spring biased to firing position, a sear releasably engageable with said hammer to hold the hammer in cocked position, a spring biasing said sear toward hammer engaging position, means including a trigger arranged to move said sear against said spring to release the sear from the hammer, a first safety member having a portion selectively movable into blocking position relative to said means including a trigger, a second safety comisting of a bar positioned between said sear and said first safety member and abutted endwise therebetween when said first safety member is in blocking position, said bar being laterally bendable under the force of the cocking action of said hammer on said sear, and means biasing said bar forwardly with said sear so as not to interfere with movement of said first safety member.

10. In a firearm, a hammer, spring biased to firing position, a sear releasably engageable with said hammer to hold the hammer in cocked position, a spring biasing said sear toward hammer engaging position, means including a trigger arranged to move said sear against said spring to release the sear from the hammer, a first safety member having a portion selectively movable into blocking position relative to said means including a trigger, a second safety comisting of a bar positioned between said sear and said first safety member and abutted endwise therebetween when said first safety member is in blocking position, and means biasing said bar forwardly with said sear so as not to interfere with movement of said first safety member.

11. In a firearm, a hammer, spring biased to firing position, a sear releasably engageable with said hammer to hold the hammer in cocked position, a spring biasing said sear toward hammer engaging position, means including a trigger arranged to move said sear against said spring to release the sear from the hammer, a first safety member having a portion selectively movable into blocking position relative to said means including a trigger, a second safety consisting of a bar positioned between said sear and said first safety member and abutted endwise therebetween when said first safety member is in blocking position, said bar being laterally bendable under the force of the cocking action of said hammer on said sear.

12. A safety attachment for a firearm having a hammer, spring biased to firing position, a sear releasably engageable with said hammer to hold the hammer in cocked position, a spring biasing said sear toward hammer engaging position, means including a pivoted trigger arranged to move said sear against said spring to release the sear from the hammer, a first safety member having a portion selectively movable laterally into blocking engagement with said trigger means to prevent operation thereof, said safety attachment consisting of a bar adapted to be positioned between said sear and said first safety member and abutted endwise therebetween when said first safety member is in blocking position relative to said trigger, said bar being laterally bendable under the force of the cocking action of said hammer on said sear, and means including a portion on said bar adapted to be engaged by said sear spring to bias said bar forwardly with said sear so as not to interfere with movement of said first safety member.

13. A safety attachment for a firearm having a hammer, spring biased to firing position, a sear releasably engageable with said hammer to hold the hammer in cocked position, a spring biasing said sear toward hammer engaging position, means including a pivoted trigger arranged to move said sear against said spring to release the sear from the hammer, a first safety member having a portion selectively movable laterally into blocking engagement with said trigger means to prevent operation thereof, said safety attachment consisting of a bar adapted to be positioned between said sear and said first safety member and abutted endwise therebetween when said first safety member is in blocking position relative to said trigger, and means including a portion on said bar adapted to be engaged by said sear spring to bias said bar forwardly with said sear so as not to interfere with movement of said first safety member.

14. A safety attachment for a firearm having a spring pressed hammer, a spring pressed sear releasably engageable with said hammer, a pivoted trigger, a connector coacting between said trigger and said sear to move said sear to hammer releasing position and a shouldered blocking pin movable into and out of blocking relation to said trigger, said safety attachment comprising a thin lock bar of laterally springable steel adapted to be disposed in crossing side by side relation to said trigger above the pivot of the trigger with its rear end in opposed relation to the blocking shoulder of said blocking pin when said blocking pin is actuated to trigger blocking position, said bar being notched on its under side to clear the pivot of said trigger, a laterally turned abutment on the forward end of said bar adapted to be engaged with a notch in the rear of said sear in blocking relation to hammer releasing movement of said sear, and a forwardly projecting retaining tip on the end of said abutment adapted to be lapped alongside of said sear, said abutment being adapted to be engaged by the sear spring adjacent the point of contact of the spring with the sear and whereby the sear spring returns the blocking bar with the sear toward hammer locking position of the sear.

References Cited in the file of this patent

UNITED STATES PATENTS

1,239,920	Larson	Sept. 11, 1917
1,855,403	Loomis	Apr. 26, 1932
2,225,583	Blizard	Dec. 17, 1940

PR 0068

ET50246

United States Patent [19]

Johnson

[11] Patent Number: 4,528,765

[45] Date of Patent: Jul. 16, 1985

[54] EXTERNALLY VISIBLE SAFETY DEVICE FOR FIREARMS

[75] Inventor: David A. Johnson, Salem, Oreg.

[73] Assignee: J.F.S., Inc., Salem, Oreg.

[21] Appl. No.: 572,745

[22] Filed: Jan. 23, 1984

[51] Int. Cl.[3] F41C 27/00; F41C 17/00

[52] U.S. Cl. ..... 42/1 LP; 42/70 R

[58] Field of Search ..... 42/1 LP, 70 R

[56] References Cited

U.S. PATENT DOCUMENTS

2,997,802	8/1961	Robbins	42/1 LP
3,089,272	5/1963	McKinlay	42/1 LP
3,605,311	9/1971	Hermann	42/1 LP
4,384,420	5/1983	Von Muller	42/1 LP

Primary Examiner—Charles T. Jordan

Agent or Firm—Chernoff, Vilhauer, Birdwell & Stenzel

[:] ABSTRACT

A safety device for use with a repeating firearm having a magazine well for holding a box-like removable magazine, to prevent the firearm from being unintentionally fired and for providing an indication visible at some distance that the firearm is in such a safe condition. A plug having a body whose dimensions correspond with those of a portion of a magazine for such a weapon includes flanges to close the magazine-receiving opening of the magazine well, a top portion which extends from the magazine well into the space which is occupied by the bolt of the weapon when the bolt is in a position closing the breech of the firing chamber of the weapon, and a member which holds a bolt latch in a position locking the bolt open. The body includes a detent for interacting with a magazine retention latch of the firearm to retain the safety device within the magazine well, with a portion of the device being visible externally as an indication that the safety device is operatively installed in the weapon. Visible exposure of more than a predetermined portion of the safety device provides an indication that the safety device is not properly installed in the weapon and that the weapon is not in a safe condition.

16 Claims, 8 Drawing Figures

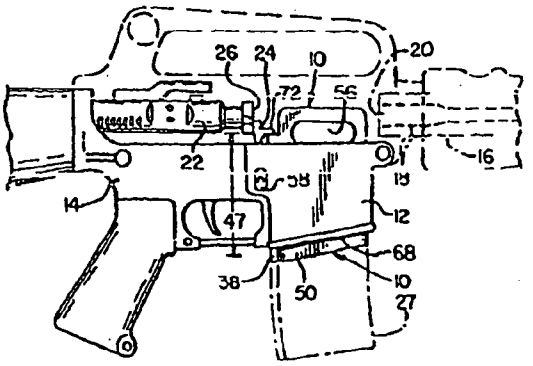

PR 0070

ET50248

FIG. 1

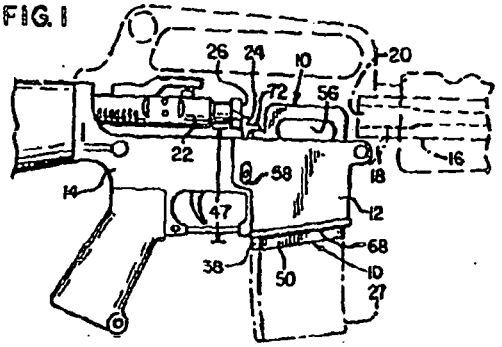

FIG. 4

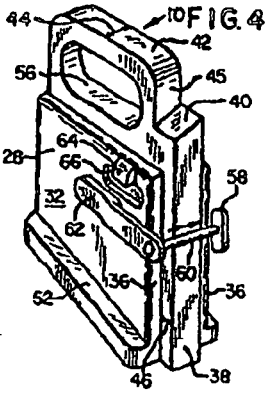

FIG. 2

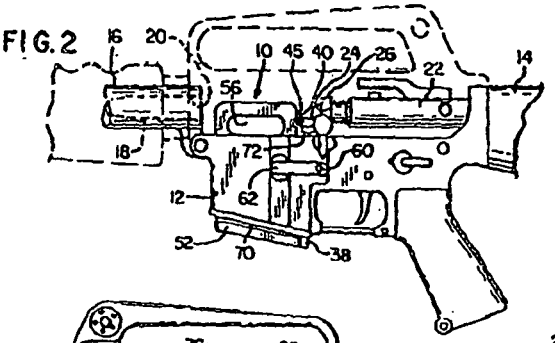

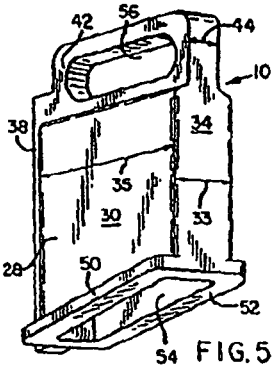

FIG. 5

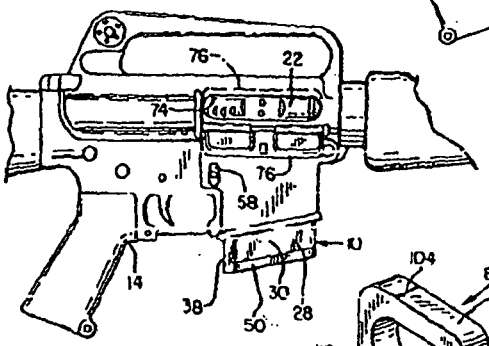

FIG. 7

FIG. 6

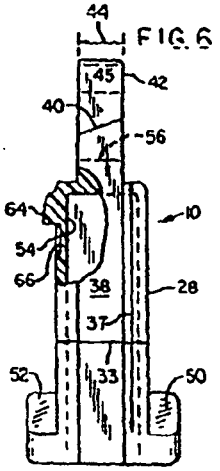

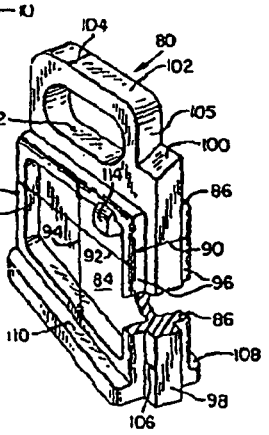

FIG. 8

FIG. 3

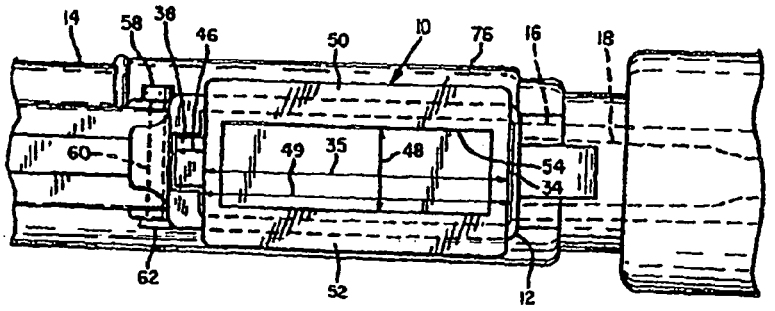

EXTERNALLY VISIBLE SAFETY DEVICE FOR FIREARMS

BACKGROUND OF THE INVENTION

The present invention relates to firearms, and particularly to a safety device for use in connection with repeating firearms utilizing box-like removable magazines.

Many repeating firearms utilize replaceable magazines which, when in place in such a firearm, exclude dirt, sand, and the like from entering internal mechanisms and doing damage or causing failure of the firearm to operate properly. When the replaceable magazine is not in place in such a weapon, however, the loading mechanism and other movable parts of the weapon are exposed to contamination by material carried by the air or otherwise found in the immediate environment.

Some firearms, particularly automatic firearms such as the self-loading M-16 rifle used by the Armed Forces of the United States, have ejection ports through which empty cartridge cases are ejected upon firing of the weapon. Although the ejection port in many self-loading weapons is another potential point of entry for contaminants into the working mechanisms of the weapon, the M-16 rifle is equipped with a hinge-mounted cover which may be closed to protect the internal mechanisms of the rifle against such contamination. Thus the M-16 rifle, when a magazine is in place and the ejection port cover is closed, is relatively well-protected against contamination.

Safety is of prime importance in conducting military training exercises. For the sake of safety, however, soldiers have been permitted to carry an M-16 rifle during some military training exercises only with the magazine removed, the ejection port cover open, and the bolt withdrawn rearwardly to an open position exposing the breech of the firing chamber, so that it could be clearly seen that the weapon was unloaded and not able to be fired, either accidentally or otherwise.

While use of the M-16 in such training exercises was thereby made safe, the working mechanisms of the rifle were thereby exposed to possible contamination. Particularly when these requirements for the sake of safety were carried out during exercises performed in desert sand conditions, the weapons were exposed to entry of contaminating materials which caused a significant number of the weapons to malfunction in later use, unless internal working mechanisms of the weapons were carefully cleaned first. Such cleaning requires an undesirably long time for readying such basic infantry weapons for service use after their use in training exercises.

It is necessary to be able to carry out training exercises safely, but without excessive risk of damage to weapons, and without requiring an unduly long period of time to make weapons ready for actual use thereafter.

Not only is it desirable for weapons to be in a safe condition during military training exercises, but it is also desirable that such a safe condition should be easily and quickly verifiable from a distance of at least several meters, so that it is quickly obvious to a commander if any of his men's weapons have not been properly made safe.

While a weapon may be made safe by removal of an essential part such as a firing pin, such a procedure has two problems. First, it may be difficult to verify that the procedure has been actually carried out and that the weapon is no longer capable of being fired. Second, there is a risk of damage or loss of a part which has been removed from its proper location, so that it would be difficult or impossible to restore the weapon to its normal useful condition.

Prior efforts to provide a way to make a firearm safe from accidental firing without disassembly of the weapon include a chamber plugging device shown in Robbins U.S. Pat. No. 2,997,802. Robbins discloses a device usable particularly in a bolt action rifle to plug the firing chamber and interfere with closure of the bolt of such a weapon. The Robbins device, however, has no provision for preventing entry of contamination through a magazine well of an automatic-loading weapon from which a magazine has been removed as a safety measure.

McKinlay U.S. Pat. No. 3,089,272 and Hermann U.S. Pat. No. 3,605,311 disclose key-locked devices which fit inside the receivers of automatic-loading shotguns and similar automatic-loading weapons. The devices close the empty case ejection port and prevent the bolt from closing the breech of such a weapon. The McKinlay and Hermann disclosures, however, make no provision for protecting the working mechanisms which may be exposed upon removal of a box-like magazine from automatic-loading weapons. Additionally, the McKinlay and Hermann devices would seem to be clearly visible only from the ejection port side of weapons in which they are installed.

What is needed, then, is a device which will positively prevent a weapon, particularly an automatic-loading weapon such as a military rifle, from being fired accidentally, and which will make it easily verifiable visually, from a considerable distance away from the weapon, that the weapon is incapable of being fired. Such a device ideally should be straightforward, inexpensive, and easy to use, should allow the weapon to be made safe without thereby exposing internal working parts to contamination, and should leave the weapon quickly able to be made reliably ready for firing without disassembly and cleaning.

SUMMARY OF THE INVENTION

The present invention overcomes the shortcomings and disadvantages of the prior art devices and meets the need for a reliable device for making automatic-loading rifles safe for non-firing use in military training exercises, by providing a lightweight, easily visible, and positively acting safety plug which fits into the magazine well of an automatic-loading weapon in place of the normal magazine and prevents firing, while excluding dirt from the internal mechanisms of the weapon. The safety device of the present invention is held in place by the latch which normally is used to retain a magazine in such a weapon. When the safety device of the present invention is in place it prevents release of a latch included in the weapon to hold the breech bolt of the weapon securely in a rearwardly located, open position. Additionally, inserting the device of the present invention interposes a physical obstruction between the bolt and the breech opening of such a rifle, preventing insertion of a cartridge into the firing chamber and preventing the bolt from closing the breech so that a cartridge could be fired, even if it were already located in the firing chamber.

PR 0073

ET50251

The safety device of the present invention includes flanges which rest against the outer edges of the magazine well into which it is placed, to prevent entry of dust and grit. Preferably, the safety device is made of a conspicuously brightly colored material, so that the flanges are clearly visible from some distance on either side of a weapon in which the safety device is in place.

Because a portion of the safety device normally extends upwardly between the front of the bolt and the breech opening of the firing chamber, the safety device cannot be inserted fully into a weapon when the bolt is closed. The safety device will not remain in place only partly inserted; furthermore, a significantly larger portion of the device is clearly visible outside the weapon when the device is only partly inserted, making its improper insertion immediately apparent.

Because the safety device of the invention positively prevents a cartridge from being fired, even if the cartridge is located within the firing chamber of the weapon, and because the device can be fully inserted into its place in the magazine well of the weapon only when the bolt is in its rearwardly withdrawn, open position, the ejection port cover of a weapon such as an M-16 rifle need not be left open to verify that the weapon has been made safe. Instead, the ejection port cover may be closed to protect the working mechanisms of the weapon from contamination.

It is therefore a principal objective of the present invention to provide a positively acting safety device whose proper use can be visually verified quickly and positively.

It is another important objective of the present invention to provide a safety device for military weapons which protects the internal moving mechanisms of such weapons against entry of dirt or sand.

It is an important feature of the safety device of the present invention that it includes a flange which remains outside the magazine well of an automatic-loading rifle in which the safety device of the present invention is used, in order to provide an indication, clearly visible from either side of the weapon, that the weapon is safe.

It is another important feature of the safety device of the present invention that it includes a pad which positively secures a bolt latch when the safety device is in place, thus preventing the bolt from being closed.

It is yet a further feature of the safety device of the present invention that it has a top portion which prevents insertion of the safety device into a weapon unless the bolt of the weapon is first fully withdrawn from the breech of the firing chamber to an open position.

It is an important advantage of the safety device of the present invention that it better protects the internal mechanisms of an automatic-loading weapon with which it is used from intrusion of foreign matter than was possible with previously known safety devices for such weapons.

It is another important advantage of the safety device of the present invention that it makes it possible to verify that a weapon is in a safe condition, visually from a greater distance than previously was possible.

The foregoing and other objectives, features and advantages of the present invention will be more readily understood upon consideration of the following detailed description of the invention taken in conjunction with the accompanying drawings

BRIEF DESCRIPTION OF THE DRAWINGS

FIG. 1 is a right side elevational view of part of an M-16 or similar rifle in which a safety device embodying the present invention is installed, preventing the rifle from being fired.

FIG. 2 is a left side elevational view of the safety device and portion of a rifle shown in FIG. 1.

FIG. 3 is a bottom plan view of the safety device and portion of a rifle shown in FIG. 1.

FIG. 4 is a perspective view, at an enlarged scale, of the safety device shown in FIG. 1, taken from the upper left rear.

FIG. 5 is a perspective view, at an enlarged scale, of the safety device shown in FIG. 1, taken from the lower right front.

FIG. 6 is a partially cut-away rear elevational view, at an enlarged scale, of the safety device shown in FIG. 1.

FIG. 7 is a right side elevational view of the portion of a rifle and the safety device shown in FIG. 1, with the bolt of the rifle in a forward, closed position preventing the safety device from being inserted fully into the magazine well of the rifle.

FIG. 8 is a perspective view, partially cut away for clarity, of an alternative form of the safety device shown in FIG. 1.

DETAILED DESCRIPTION OF THE INVENTION

Referring first to FIGS. 1–3 of the drawings, a safety device 10 embodying the present invention is shown in its operative position in the magazine well 12 of an automatic-loading rifle 14 similar to the model M-16 rifle used by the armed forces of the United States of America. For the sake of clarity, parts of the rifle 14 are shown in phantom lines in FIGS. 1 and 2. The rifle 14 includes a barrel 16 having a firing chamber 18 with a breech opening 20 located at the rear end of the barrel 16. A breech bolt 22 is reciprocatingly movable between a rearward, or open, position in which the bolt 22 is located as shown in FIGS. 1 and 2, and a forwardly located, closed position in which the bolt 22 abuts against the rear end of the barrel 16, closing the breech opening 20 (FIG. 7). A bolt stop latch 24 is shown in FIG. 1 in a raised position, in which it is ahead of a portion of the front end 26 of the bolt 22, holding the bolt 22 in the open position.

A magazine 27, shown in broken line in FIG. 1, is held with its upper end within the magazine well 12 when the rifle 14 is loaded and is removable to permit rapid reloading of the rifle 14 by replacement of an emptied magazine 27 with a fully loaded one. However, when no magazine 27 is present in the magazine well 12 the bolt 22 and other moving parts are exposed within the magazine well 12. Thus, when the magazine 27 is removed as a safety precaution the internal parts of the action of the rifle 14 are susceptible to damage from abrasive dirt and to entry of particles which could lodge in the action of the rifle 14, causing malfunction.

The safety device 10, shown in greater detail and at an enlarged scale in FIGS. 4–6, includes a generally rectangular main body 28. The body 28 includes a right side 30, a left side 32, a front 34, and a rear side 36, and has a width 33, a length 35, and a height 37 of the portion of the body 28 within the magazine well 12. A rectangular spline 38 extends vertically along the rear side 36 of the body and includes an inclined surface or

PR 0074

ET50252

pad 40 at its upper end. The location of the pad 40 corresponds to that of a tab connected with a cartridge follower (not shown) of the magazine 27 when the rifle 14 is fully empty and the bolt 22 is open.

A top portion 42 having a width 44 narrower than the width 33 of the body 28 is located atop the main body 28 and extends above the height of the pad 40. The top portion 42 includes a generally vertical rear face 45.

The main body 28 and spline 38 fit slidably within the magazine well portion 12 of the rifle 14, occupying the space which normally is occupied by the upper portion of the magazine 27 when the rifle 14 is loaded. The size of the body 28 closely approximates that of the interior of the magazine well 12. The spline 38 is, for example, of the same width 44 as the top portion 42. The width 44 and a rearward distance 46 to which the spline 38 extends behind the rear side 36 are determined by the interior dimensions of the magazine well 12, so as to provide a sliding fit for the spline 38 within a cartridge follower channel provided in the rear portion of the magazine well 12 for movement of the tab of the cartridge follower (not shown) of the magazine 27. The spline 38 thus fills that channel to prevent entry of dirt when the safety device 10 is located operatively in the rifle 14. The magazine well 12 has an interior depth 67 (FIG. 1), the distance from its magazine-receiving opening to the location of the bolt 22 in the receiver portion of the rifle 14. The interior of the magazine well 12 similarly has an interior width 48 (FIG. 3) extending laterally of the rifle 14, and an interior length 49, extending longitudinally of the rifle 14.

Located along and extending laterally outward from the bottom of the right side 30 and left side 32 of the body 28 are a pair of flanges 50 and 52. In the safety device 10, designed for use particularly with an M-16 rifle, the flanges slope upwardly from the rear 36 to the front 34 of the main body 28, so that they tightly close the bottom of the magazine well 12. The flanges are thick enough (for example, being about 3/16 inch thick) to be clearly visible beneath the magazine well 12 when the safety device is in place, and to be used conveniently as a grip when removing the safety device 10 from the magazine well 12.

The bottom of the body 28 preferably defines a cavity 54 in order to minimize the weight of the safety device 10, without making it so weak that it can flex and thereby admit foreign matter into the magazine well 12. Similarly, an opening 56 extends laterally through the top portion 42, lightening the weight of the device 10 and also providing a place through which a strap or belt may be placed to attach the safety device 10 to a soldier's equipment pack.

When the safety device 10 is operatively in use in a rifle 14, as shown in FIG. 1, it is retained within the magazine well 12 by the magazine latch mechanism of the rifle 14. The magazine latch mechanism includes a push button 58, located on the right side of the rifle 14, and a push rod 60 (shown in FIG. 4) which is biased toward the right side of the rifle by a spring (not shown). A catch 62 extends forward along the left side of the rifle 14, as shown in FIG. 2, and ordinarily engages a detent (not shown) located on the left side of a magazine such as the magazine 27, to hold the magazine in place within the magazine well 12.

A detent 64 is located on the left side 32 of the main body 28 of the safety device 10. The detent 64 has a sloping upper surface which is inclined downwardly and outwardly with respect to the left side 32 of the safety device 10, as well as a generally horizontal bottom surface which extends outward from the left side 32 of the safety device. A depression 66 is located in the left side 32 immediately below the detent 64. Thus, as the safety device 10 is moved upwardly into the magazine well 12, the sloping surface of the detent 64, acting as a wedge, urges the catch 62 leftward. Once the safety device 10 has been fully inserted into the magazine well 12, the catch 62 is free to move rightwardly, urged by the spring, into a latching position beneath the detent 64 and partially within the depression 66, retaining the safety device 10 within the magazine well 12.

When the safety device 10 is located operatively within the magazine well 12, the flanges 50 and 52 abut closely against the bottom edges 68 and 70 of the left and right sides of the magazine well 12. Additionally, the front 34 of the safety device 10 is then located closely adjacent to a front interior surface of the magazine well 12, the spline 38 fills the cartridge follower channel at the rear of the magazine well, and the rear 36 of the safety device abuts against the rear interior surface of the magazine well 12, so that the safety device 10 effectively closes the magazine well 12 against entry of contaminants.

When the safety device 10 is properly located and held within the magazine well 12 by the catch 62, the top portion 42 extends upwardly between the front end 26 of the bolt 22 and the breech opening 20 of the barrel 16. The top portion 42 thus positively obstructs the bolt 22, the rear face 45 opposing the bolt 22, preventing it from being closed to make it possible to fire a cartridge from the rifle 14.

Additionally, when the safety device 10 is in place the pad 40 is located against the bottom of a bolt stop latch lever 72 of the rifle 14. The bolt stop latch lever 72 is ordinarily raised to an operative position by a portion of the cartridge follower (not shown) of a magazine 27 upon rearward movement of the bolt 22 after ejection of the final cartridge which was originally located within a magazine 27. Ordinarily, once the lever 72 has been raised by the cartridge follower of a magazine, the bolt stop latch 24 remains in a raised position, preventing forward movement of the bolt 22 until it is manually released after a loaded magazine 27 has been inserted into the proper location within the magazine well 12.

Since the pad 40 of the safety device 10 is located at the position which would be taken by a portion of the cartridge follower of a magazine 27 upon ejection of the final cartridge, it holds the lever 72 up, preventing the bolt 22 from being released to move forward while the safety device 10 is latched within the magazine well 12. Nevertheless, should the bolt stop latch 24 or the lever 72 become broken, the rear face 45 of the top portion 42 of the safety device 10 still prevents the bolt 22 from closing against the breech 20 of the barrel 16 and thus prevents the rifle 14 from discharging a cartridge, should such a cartridge be present in the chamber 18.

The rifle 14, as shown in FIG. 7, includes an empty case ejection port 74 and an ejection port cover 76, which is shown latched in a downwardly extending open position in FIG. 7. The ejection port cover 76 is attached to the right side of the rifle 14 by a hinge and is biased by a spring toward a closed position shown in broken line in FIG. 7, in which the ejection port cover 76 closes the ejection port 74 against entry of foreign material into the interior of the receiver of the rifle 14. Because of the construction of the rifle 14 it is difficult to visually determine, from any distance away from the

PR 0075

ET50253

rifle 14, whether the bolt 22 is closed or in a rearwardly-located open position, except by inspection with the ejection port cover 76 open. Keeping the ejection port cover 76 open, however, would permit airborne foreign matter to contaminate the moving parts located within the receiver of the rifle 14. Thus, keeping the ejection port cover 76 open increases the likelihood of the rifle 14 failing to operate properly at some later time.

The safety device 10 of the present invention may be fully inserted and latched into place within the magazine well 12 only when the bolt 22 is latched in its fully rearwardly located position by the bolt stop latch 24.

As shown in FIG. 7, the safety device 10 cannot be fully inserted and extends downwardly a noticeably greater distance below the bottom edges 68 and 70 of the magazine well 12, if the bolt 22 is closed when one attempts to insert the safety device 10. Since the magazine latch catch 62 engages the lug 64 only when the safety device 10 is fully inserted upwardly within the magazine well 12, the safety device 10 will normally fall out of the magazine well 12 unless it is fully inserted into the magazine well 12. Therefore, the safety device 10 cannot be inserted within the magazine well 12 to the proper location and will either be absent or visible to a much greater extent if the rifle 12 is in a condition to be fired immediately.

On the other hand, if the safety device 10 is properly located within the magazine well 12 of the rifle 14, the flanges 50 and 52 will be adjacent the bottom edges 68 and 70 of the magazine well 12, clearly visible to a person on either side of the rifle 14. Since the safety device 10 can be inserted fully into the weapon only when the bolt 22 is fully rearwardly withdrawn to the open position as shown in FIGS. 1 and 2, the presence of the flanges 50 and 52 closely along the bottom edges 68 and 70 verifies that the bolt 22 is fully rearwardly withdrawn, making it unnecessary for the ejection port cover 76 to be kept open. Furthermore, the top portion 42 prevents a cartridge from being placed into the chamber 18 through the ejection port 74.

Thus the flanges 50 and 52 and the spline 38 close the bottom opening of the magazine well 12 to prevent entry of contaminating materials such a sand and the like, and the ejection port cover 76 may be left closed to prevent entry of similar materials through the ejection port 74. Nevertheless, it is easy to verify visually, even from a considerable distance, that the rifle 14 has been made safe by the safety device 10 and cannot be fired unintentionally.

If it is desired, however, to fire the rifle 14 quickly, the safety device 10 can be quickly released from its location within the magazine well 12 by depressing the magazine latch release button 58 on the right side of the rifle 14. The safety device 10 is thus freed to drop or be withdrawn from the magazine well 12, permitting a loaded magazine 27 to be inserted in the normal manner.

The safety device 10 may be manufactured preferably of a durable high density plastics material with sufficient strength and thickness to prevent deformation which might permit dirt to enter the magazine well 12 around the safety device 10 and to prevent the bolt 22 from moving forward in case of failure of the bolt stop latch 24 to operate properly. Some resiliency of the material is preferred in order to provide a snug sliding fit in the magazine well and avoid damage to the moving parts such as the bolt 22 which may come into contact with the safety device 10. Preferably, the safety device 10 has a bright, clearly visible color, such as international orange, which contrasts with the color of the rifle 14, in order to facilitate verification from a distance of at least several meters that the safety device 10 is properly located within a magazine well 12.

A safety device 80 which embodies the present invention is generally similar to the safety device 10 in its functional characteristics. Instead of having a main body 28 which has flat right and left sides 30 and 32, however, the safety device 80 has a main body 82 including a centrally located wall 84, a right side rim 86, and a left side rim 88, which define a width 90, a length 92, and a height 94 of the main body 80, corresponding, respectively, with the width 33, length 35, and height 37 of the body 28. Whereas in the safety device 10 the bottom and interior of the body 28 are hollow, the right and left rims, 86, 88 of the body 82 of the safety device 80 define respective cavities in the sides of the body 82 in order to provide a main body 82 which is lighter than a solid body of the same overall dimension would be. The safety device 80 has an advantage with respect to the safety device 10 in that it is somewhat easier to manufacture as a molded plastic product.

Corresponding with the similarly-named portions and features of the safety device 10, the safety device 80 includes a front, a rear side 96, a spline 98, an inclined pad 100, a top portion 102, a top portion width 104, and a generally vertical rear face 105. The spline 98 extends behind the rear side 96 a rearward distance 106. A pair of flanges 108 and 110 are provided, and an opening 112 extends laterally through the top portion 102. A detent 114 corresponding to the detent 64 of the safety device 10 is also included.

The terms and expressions which have been employed in the foregoing specification are used therein as terms of description and not of limitation, and there is no intention, in the use of such terms and expressions, of excluding equivalents of the features shown and described or portions thereof, it being recognized that the scope of the invention is defined and limited only by the claims which follow.

What is claimed is:

1. For use in a repeating firearm, said firearm having a bolt reciprocatingly movable between a closed position necessary for the firearm to be fired and an open position, and having a magazine well including an opening for receiving a magazine, a safety device for preventing the firearm from being fired the safety device comprising:

(a) a main body capable of fitting within said magazine well; and

(b) top portion means attached to said main body, for preventing said bolt from moving from the open position to the closed position when said main body is properly located within said magazine well, and for preventing said main body from being inserted fully into said magazine well when said bolt is in said closed position.

2 The safety device of claim 1, further comprising magazine well closure means, associated with said main body, for closing said opening into said magazine well and preventing entry of foreign material into said magazine well.

3 The safety device of claim 2 wherein said magazine well closure means comprises at least one flange extending from said body.

4 The safety device of claim 2 wherein a predetermined portion of said magazine well closure means is

PR 0076

ET50254

located outside said magazine well when said safety device is operatively located within said magazine well.

5. The safety device of claim 3 wherein said firearm further includes a magazine retention latch, said safety device further comprising detent means located on said main body for interacting with said magazine retention latch and retaining said safety device in an operative location with said main body located within said magazine well.

6. The safety device of claim 5, further including means defining a depression located on said main body for receiving a portion of said magazine retention latch of said firearm.

7. The safety device of claim 3, said firearm further including a bolt stop latch, said safety device further comprising pad means associated with said main body for causing said bolt stop latch to retain said bolt in an open position.

8. A safety device for use in conjunction with a firearm having a magazine well defining an exterior opening and having a predetermined interior width, a predetermined interior length and a predetermined depth, said firearm further having a firing chamber, a breech opening associated with said firing chamber, an ejection port equipped with a closable ejection port cover, and a bolt reciprocatingly movable between a breech closing position and an open position wherein said bolt is located a predetermined distance rearward from said breech closing position, said safety device comprising:

(a) a body having a width no greater than said predetermined interior width, a length no greater than said predetermined interior length, and a height at least equal to said predetermined depth;

(b) magazine well closing means connected with said body for closing said exterior opening against entry of foreign matter therethrough;

(c) a top portion connected with said body and including a generally vertical rearwardly facing surface separated from said magazine well closing means by a distance sufficiently greater than said predetermined depth, so that said vertical surface is interposed between said bolt and said breech opening when said safety device is operatively located in said firearm; and

(d) means associated with said body for providing an indication, visually perceptible regardless of said ejection port cover being closed, that said firearm is not able to be fired when said safety device is operatively located in said firearm.

9. The safety device of claim 8, said firearm including a bolt stop latch for holding said bolt in said open position, said bolt stop latch including a bolt stop latch lever which holds said bolt stop latch in position to hold said bolt in said open position when said bolt stop latch lever is located in a predetermined bolt stop latch lever location, wherein said safety device further comprises a bolt latch lever holding pad associated with said body and located at a position, relative to said body, corresponding to said predetermined bolt latch lever location, for holding said bolt latch lever in said predetermined bolt stop latch lever location when said safety device is located operatively in said firearm.

10. The safety device of claim 8 wherein said body has a bottom and said magazine well closing means comprises a flange extending from said body or said bottom thereof.

11. The safety device of claim 8, said firearm further including a magazine retention latch mechanism having a movable catch for engaging a magazine within a magazine well, said safety device further comprising detent means for being engaged by said magazine retention latch mechanism for retaining said safety device located operatively in said firearm.

12. The safety device of claim 8 wherein at least a portion of said safety device is brightly colored and located so as to remain outside said firearm when said safety device is operatively located in said firearm.

13. The safety device of claim 8 wherein said top portion extends far enough from said main body to prevent full insertion of said safety device into said magazine well and thereby cause said body to extend outside said magazine well a clearly recognizable distance as an indication that said firearm is not in a safe condition when said bolt is in said breech closing position.

14. A safety device for use in a firearm of the type having a magazine well, said magazine well being of a predetermined size and including a cartridge follower channel and an exterior opening, the firearm further including a barrel having a breech, a bolt reciprocatingly movable, between a breech closing position and an open position in which the bolt is withdrawn rearwardly from the breech, a bolt stop latch capable of holding the bolt in said open position, and a magazine retention latch located at least partially within said magazine well, said safety device comprising:

(a) a main body which fits slidably within said magazine well, said main body including front, rear, left, and right sides and a bottom;

(b) a flange extending laterally from each of said left and right sides of said main body adjacent said bottom;

(c) a spline extending vertically along said rear side of said main body and having a bolt stop latch operating pad located thereon;

(d) a top portion, including a rear face extending upwardly from said main body; and

(e) a detent protruding outwardly from one of said sides of said main body, the location of said detent corresponding with the location of said magazine retention latch, and said flanges being so located relative to said detent as to close said exterior opening of said magazine well when said magazine retention latch engages said detent, and said pad being so located relative to said detent as to hold said bolt stop latch in a position engaging said bolt and holding it in said open position.

15. The safety device of claim 14 wherein said top portion extends upwardly from said body at least far enough to prevent said safety device from being inserted far enough into said magazine well for said detent to engage said magazine retention latch when said bolt is in a position closing said breech.

16. The safety device of claim 14 wherein said flanges and said main body are of a bright color.

* * * * *

PR 0077

ET50255

United States Patent [19]

Johnson

[11] Patent Number: 4,603,498

[45] Date of Patent: Aug. 5, 1986

[54] EXTERNALLY VISIBLE SAFETY DEVICE FOR GRENADE LAUNCHER

[76] Inventor: David A. Johnson, 3432 Tanglewood Way, Salem, Oreg. 97302

[21] Appl. No.: 784,926

[22] Filed: Oct. 4, 1985

[51] Int. Cl.[4] F41C 17/08; F41F 1/00

[52] U.S. Cl. 42/105; 42/70.11

[58] Field of Search ..... 42/1 F, 1 A, 1 D, 1 LP

[56] References Cited

U.S. PATENT DOCUMENTS

2,997,002	8/1961	Robbins	42/1 LP
3,089,272	5/1963	McKinley	42/1 LP
3,605,311	9/1971	Hermann	42/1 LP
4,058,923	11/1977	Smith	42/1 LP
4,136,476	1/1979	Hetrick	42/1 LP
4,394,420	8/1983	Von Muller	42/1 LP
4,528,765	7/1985	Johnson	42/1 LP

Primary Examiner—Charles T. Jordan
Assistant Examiner—Michael J. Carone
Attorney, Agent, or Firm—Chernoff, Vilhauer, McClung & Stenzel

[57] ABSTRACT

A safety device for firearms, including a chamber plug portion fitting in the breech and preventing insertion of a cartridge, and an indicator located externally of the weapon and fixedly joined with the chamber plug by a connector small enough to fit within a pre-existing passageway extending between the interior of the firing chamber and the exterior of the weapon when the breech of the weapon is closed as if in readiness for firing. Preferably, the indicator is of a bright color and is located so as to be visible on both sides of the weapon.

14 Claims, 5 Drawing Figures

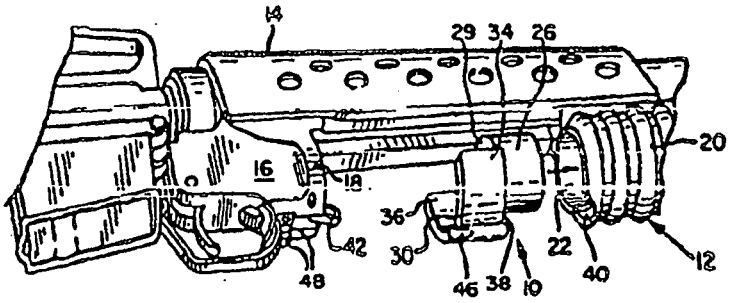

PR 0079

ET50257

FIG. 1

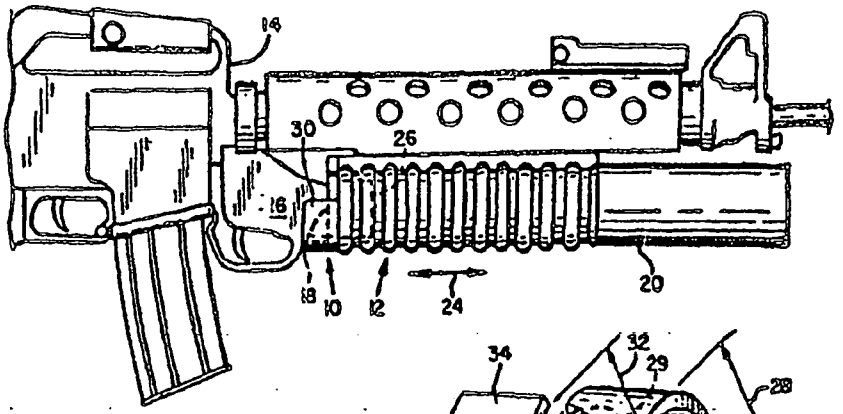

FIG. 2

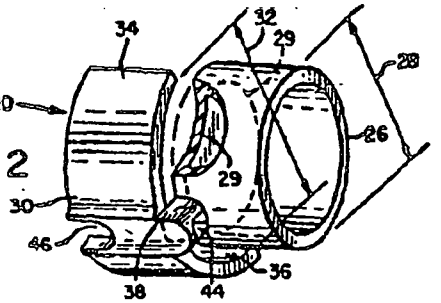

FIG. 3

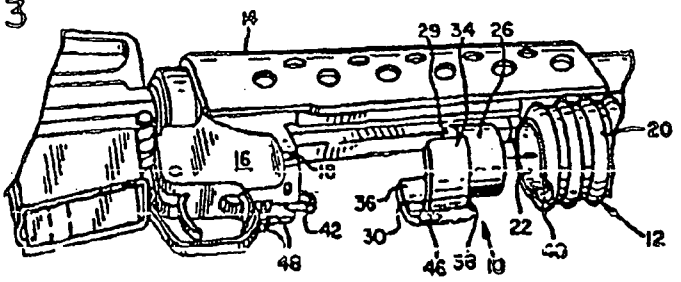

FIG. 4

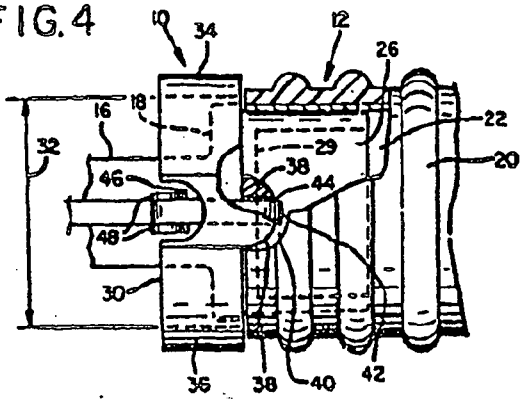

FIG. 5

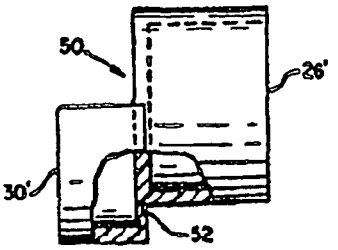

PR 0080

ET50258

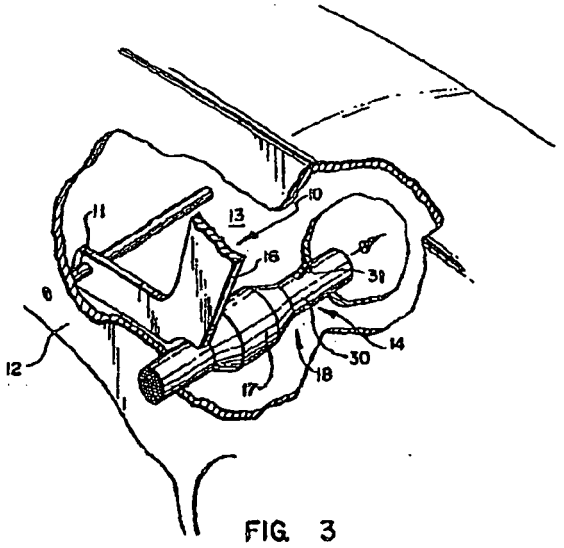

FIG. 3

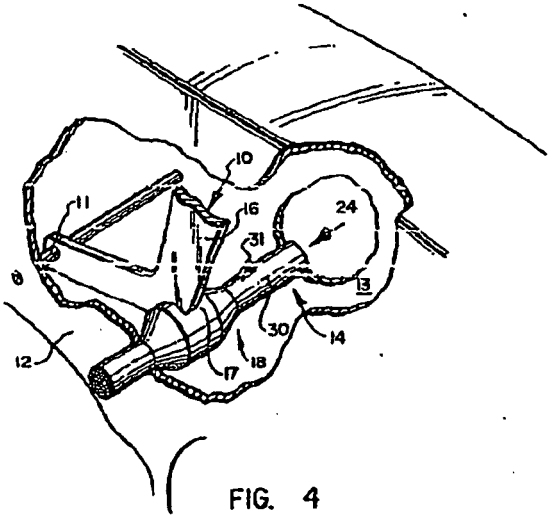

FIG. 4

PR 0081

ET50259

SAFETY DEVICE FOR RIFLES

BRIEF DESCRIPTION OF THE INVENTION

1. Field of the Invention

This invention relates to safety devices on semi-automatic firearms which operate to lock the bolt or breechblock into an open position and prevent chambering of a cartridge.

2. Prior Art

Safety devices for semi-automatic firing rifles are not uncommon and generally use a combination of locking devices operated by direct application of force upon the breechblock to lock the breechblock into an open position, and a button operated thumb or finger safety which locks the trigger so that the rifle will not fire.

To the best of my knowledge no one, in the past, has recognized the desirability of a device which operates to hold the breechblock in the open position after firing by holding the trigger in a pulled position and then by operating the rifle safety actuator to lock the breechblock in that open position until the rifle safety actuator is again moved to its "fire" position where it will allow forward movement of the breechblock.

SUMMARY OF THE INVENTION

It is the principle object of the present invention to provide a safety device for rifles such as a Ruger 10/22 caliber semi-automatic, which will operate to lock the rifle breechblock in an open position when the pressure applied to pull the trigger is maintained after firing, and which can subsequently be easily locked into that position by operation of the rifle safety actuator.

Other objects are to provide a breechblock locking device that is easily constructed from inexpensive materials and that can be readily installed in a conventional rifle such as a Ruger 10/22 caliber semi-automatic either during initial construction thereof or subsequent to construction and that can be readily removed by the user should he so desire.

Still another object is to provide a breechblock locking device which can be operated by simple trigger pull after firing and which will continue holding the breechblock in the open position so long as the firing trigger pressure is continously maintained.

Still another object is to provide contact with rifle safety, an assembly which incorporates the rifle safety actuator, such that when the actuator is placed in its "safe" position, will lock the breechblock in the open position and will continue to hold the breechblock in that position, without effort on the part of the operator, until the actuator is placed in its "fire" position, to thereby release the breechblock.

Principal features of the invention include a pivoted breechblock locking device arranged to be pivotally connected into the receiver of a rifle and to be pivoted to a raised position by operation of the rifle trigger. A sear finger is pivotally carried by the breechblock locking device and is spring biased into engagement with a shoulder on the rifle breechblock when the trigger is pulled and the breechblock is in its opened position. A slide assembly, which comprises the usual rifle safety actuator, is moved to wedge beneath the breechblock locking device and to thereby hold the sear finger in engagement with the open breechblock. When the pull on the trigger is released, the breechblock will be held open by the rifle safety actuator until the actuator has been operated to move it to its "fire" position. Use of the present invention does not require any change in existing rifle structure and merely involves a direct replacement of the manufacturers breechblock rearward detention apparatus.

Further objects and features of the invention will become apparent from the following detailed description, taken together with the accompanying drawings, disclosing what is presently contemplated as being the best mode of the invention.

THE DRAWINGS

In the drawings:

FIG. 1 is a vertical section view through a portion of a rifle receiver area and showing the rifle breechblock, fragmentarily, in a locked open position;

FIG. 2, a similar view, but with the breechblock in a closed position;

FIG. 3, a fragmentary, perspective breechblock locking device and showing the slide assembly, with the locking device in its lowered position; and

FIG. 4, a view like that of FIG. 3, but showing the locking device in its raised position.

DETAILED DESCRIPTION

Referring now to the drawings:

In the illustrated preferred embodiment, the safety device of the invention includes a breechblock locking device, shown generally, at 10. The breechblock locking device is pivoted on a pivot pin 11 that extends between side walls 12 and 13 of a receiver 14 of a rifle, such as a Ruger, semi-automatic 10/22 caliber rifle, shown fragmentarily at 15. The locking device is shaped to allow for clearance of other components in the rifle chamber and as shown includes a leg 16 arranged to be engaged by an enlarged portion 17 of the rifle safety actuator shown generally at 18 and a hook 19 projecting from the leg 16 and with its free end arranged to rest on top of a conventional, pivoted rifle trigger 20.

A socket 21 is formed in an upper edge of the locking device and a cylindrical or spherical swivel member 22 is captively positioned in the socket. A sear finger 23 projects from the swivel member and a flat spring 24 has one end fitted into a notch 25 provided therefore in the sear finger and its other end secured in a notch 26 formed in one edge of the hook 19. The spring 24 thus biases the sear finger towards an upwardly projecting position where it is adapted to engage the undersurface 27 of the conventional breechblock 28 of the rifle.

The breechblock 28 has an inclined shoulder 29 on the undersurface thereof, which shoulder is adapted to be engaged by the end of the sear finger 23 when the trigger 20 is pulled and held in its pulled position, as shown in solid lines in FIG. 1, and when the breechblock has moved to its opened position. However, when the trigger is in its forward (i.e. unpulled) condition and the breechblock locking device is not held in a raised position by the rifle safety actuator 18, the sear finger 23, even though rotated to a fully upright position, will allow unrestricted movement of the spring biased breechblock to its closed position.

As shown best in FIGS. 3 and 4, the rifle safety actuator 18 has a shaft 30 that extends through the opposite side walls 12 and 13 of the receiver 14 and that is beneath the breechblock locking device 10. An upset portion 31 on the shaft 30 engages wall 13 to limit travel of the shaft 30 through that wall and the gradually enlarged portion 17 on the shaft 30 will move under the

PR 0082

ET50260

breechblock locking device 10 to engage the breechblock 28.

While the upset portion 31 has been shown as a means for holding the rifle safety actuator within the rifle receiver, any other conventional arrangement can be used. Various snap acting and one-center detents have been proposed in the past for positively holding the rifle safety actuator in either its "safe" position, wherein the breechblock cannot move and its "fire" position, where the breechblock is free to move during the firing cycle of the rifle.

As the enlarged portion 17 moves under the breechblock locking device 10 it wedges it upwardly. When the breechblock 28 is in its closed position it is moved from above the sear finger 23 and the shaft 30 can be moved to place the rifle in a "safe" condition in customary fashion, or can be positioned to allow for conventional firing of the rifle. When the breechblock is moved to its opened or rearmost position by pulling on the trigger to fire a shell, thereby opening the breechblock, the sear is rotated by the rearwardly moving breechblock, against the bias of spring 24 to allow the breechblock to pass over. The breechblock is then held in position by the trigger 20 continuing to engage hook 19 such that the breechblock locking device will be raised to allow the sear finger 23 to be biased by spring 24 into engagement with shoulder 29 on the bottom of the breechblock after the shoulder has moved past the sear finger. The rifle safety actuator can be manipulated by pushing shaft 30 until the enlarged portion 17 is beneath the breechblock locking device 10 to continue to hold it in its opened position even after pressure on the trigger 20 is released.

With the safety device of the present invention semi-automatic rifles of the type described that normally chamber a new round immediately after firing and that are then normally placed in a loaded safety condition by manipulating a slide assembly safety to prevent firing can be easily placed in an unloaded safe condition thereby making discharge impossible. If the user simply locks the breechblock in the open condition at time of firing the rifle, holding the trigger in the firing position, and manipulating the slide to allow the sear finger to engage and hold the shoulder on the bottom of the breechblock, as has been described, he can then pull the usual magazine (not shown) fully or partially from the rifle before allowing the breechblock to again move forward by moving the rifle safety actuator to "fire" position. The rifle is then in an unloaded condition and [illegible] had been positioned in the chamber. Also the unloaded rifle is then legal for transport in motor vehicles.

Although a preferred form of my invention has been herein disclosed, it is to be understood that the present disclosure is made by way of example and that variations are possible without departing from the subject matter coming within the scope of the following claims, which subject matter I regard as my invention.

I claim:

1. A safety device for rifles having a reciprocating breechblock with a shoulder on the bottom thereof positioned within a walled receiver and a trigger, said safety device comprising

a breechblock locking device;

means pivotally mounting said breechblock locking device within the receiver beneath the breechblock and to have at least a portion thereof in engagement with the trigger whereby pulling of the trigger will raise the breechblock locking device; and

means on the breechblock locking device to engage the shoulder on the bottom of the breechblock when the breechblock is in an opened position to thereby hold said breechblock in the opened position.

2. A safety device for rifles as in claim 1, further including

means for holding the breechblock locking device in its raised position after being raised by pulling of the trigger.

3. A safety device for rifles as in claim 2, wherein

the means on the breechblock locking device to engage the shoulder on the bottom of the breechblock includes a sear finger;

means pivotally mounting the sear finger to project upwardly from the breechblock locking device;

means biasing the sear finger to project upwardly from the breechblock locking device to engage the bottom of the breechblock.

4. A safety device for rifles as in claim 3, wherein the means pivotally mounting the sear finger to project upwardly from the breechblock locking device comprises

a socket formed in an upper edge of the breechblock locking device; and

a swivel member attached to the sear finger and secured for rotation in the socket.

5. A safety device for rifles, as in claim 4, wherein the means for holding the breechblock locking device in its raised position after being raised by pulling of the trigger includes

the usual rifle safety actuator having a shaft mounted beneath the breechblock locking device and extending through the rifle receiver, said shaft being selectively slidable to move an enlarged portion thereof beneath the breechblock locking device to thereby force the breechblock locking device to remain raised, and to hold the breechblock in an open position when the rifle safety actuator is in its usual "safe" position and from under the breechblock locking device when the rifle safety actuator is returned to "fire" position.

* * * * *

PR 0083

ET50261

United States Patent [19]

Johnson

[11] Patent Number: 4,709,496

[45] Date of Patent: * Dec. 1, 1987

[54] SAFETY DEVICE INCLUDING CHAMBER PROBE

[76] Inventor: David A. Johnson, 3432 Tanglewood Way, Salem, Oreg. 97302

[*] Notice: The portion of the term of this patent subsequent to Oct. 28, 2003 has been disclaimed.

[21] Appl. No.: 943,946

[22] Filed: Dec. 18, 1986

[51] Int. Cl.[4] F41C 17/08

[52] U.S. Cl. 42/70.11; 42/1.03

[58] Field of Search 42/70.11, 70.01, 1.03

[56] References Cited

U.S. PATENT DOCUMENTS

4,528,765 7/1985 Johnson 42/70.11

4,619,062 10/1986 Johnson 42/70.11

Primary Examiner—Charles T. Jordan

Attorney, Agent, or Firm—Chernoff, Vilhauer, McClung & Stenzel

[57] ABSTRACT

A safety device for use with a repeating firearm having a magazine well for holding a box-like removable magazine, to prevent the firearm from being fired unintentionally and for providing an indication visible at some distance that the firearm is in a safe condition. A main body of the device corresponds in size with the magazine for the weapon and includes a top portion which extends into the space left open between the breech and the face of the bolt of the weapon when the bolt is withdrawn. A plunger slidably disposed within the main body is connected with a movable chamber probe which would be prevented from entering the chamber by a round of ammunition, and which prevents the plunger from being moved to a position latching the device in the firearm unless the probe is able to enter the firing chamber. Visible exposure of more than a predetermined portion of the safety device indicates that the safety device is not properly installed in the weapon and that the weapon is therefore not to be considered safe.

19 Claims, 8 Drawing Figures

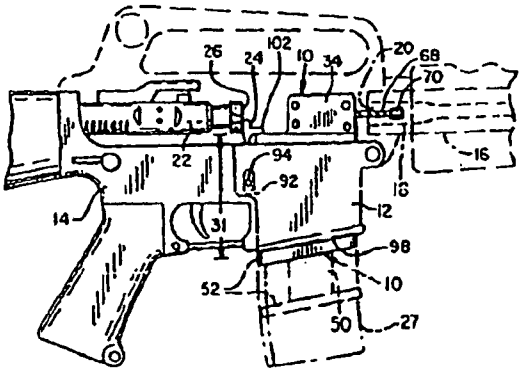

PR 0085

ET50263

FIG. 1

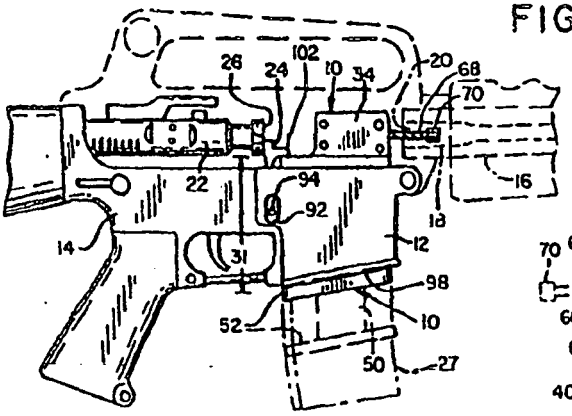

FIG. 4

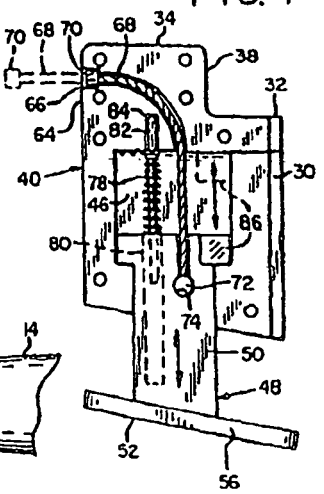

FIG. 2

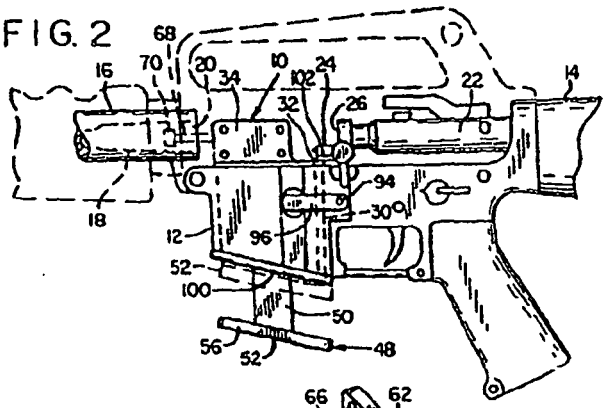

FIG. 3

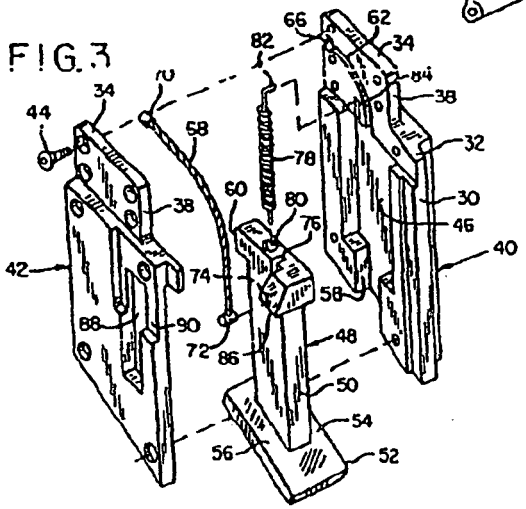

PR 0086

ET50264

EXTERNALLY VISIBLE SAFETY DEVICE FOR GRENADE LAUNCHER

BACKGROUND OF THE INVENTION

The present invention relates to a safety device for use with a firearm, and particularly to such a safety device which is visible externally and prevents insertion of a cartridge into a firing chamber of a manually breech-loaded firearm, yet permits the action of the firearm to be fully closed while the safety device is present.

Some firearms of the breech-loading single-shot variety, particularly firearms such as the M203 Grenade Launcher which is used with the M-16 rifle of the armed forces of the United States, are somewhat unwieldy when the action is not closed. Additionally, having the breech of such a firearm open exposes both the breech block or equivalent mechanism and the firing chamber to entry of dust and other contaminants which may damage the weapon.

However, in handling firearms it is extremely important that they be in a safe condition, except when about to be intentionally discharged. Particularly when personnel unfamiliar with such weapons are being trained in their use, it is important that the weapons be made impossible to discharge, and it is desirable that such a safe condition be visually verifiable by an instructor from an appreciable distance. Furthermore, such a condition of safety should be attained easily and quickly, without disassembly of the weapon or rendering it permanently unuseable.

Additionally, it is desireable to have such a weapon in a safe condition, yet have the breech of the firing chamber fully closed and locked, in order to exclude contaminants, and to permit weapons to be handled, during training, as if they were ready to be discharged.

Prior efforts to provide a means of making a firearm safe from accidental firing without disassembly of the weapon include a chamber plugging device shown in Robbins U.S. Pat. No. 2,997,802. Robbins discloses a device useable particularly in a bolt action rifle to plug the firing chamber and interfere with closure of the bolt of such a weapon. The Robbins device, however, does not appear to be appropriate for use with certain types of single shot breech-loading weapons, and particularly does not seem suitable for use with grenade launchers, as it requires that the breech be kept open. In a grenade launcher such as the Model M203 Grenade Launcher this would apparently result in a slideable launcher tube portion of the weapon remaining moveable, which is undesirable.

Hetmann U.S. Pat. No. 3,605,311 and McKinley U.S. Pat. No. 3,089,272 disclose devices which may be locked in place in the ejection ports of shotguns to prevent insertion of cartridges and closure of the breech of such weapons. These devices, however, are not readily visible from both sides of a weapon so equipped, and may allow entry of contaminants into the mechanisms of the weapons as a result of the breech being held open.

VonMuller U.S. Pat. No. 4,384,420 discloses a replacement for the magazine of an automatic pistol which may be locked in position to prevent insertion of a loaded magazine. The VonMuller device also seems to be deficient in not being readily visible as a safety indicator from any distance.

Johnson U.S. Pat. No. 4,528,755 discloses an externally visible safety device useable with repeating firearms such as automatic rifles equipped with box-type magazines. The device disclosed in the Johnson patent, however, is not readily adaptable for use in a single shot breech loading weapon such as the M203 Grenade Launcher.

What is needed, then, is a device which will positively prevent a weapon such as a breech loading grenade launcher from being fired accidentally, and which will make it easily verifiable visually, from a considerable distance away from the weapon, that the weapon is incapable of being fired. Such a device ideally should be straightforward, inexpensive, and easy to use, and should make a weapon safe without thereby exposing internal working parts to contamination, and without preventing the weapon from being readied quickly to be fired.

SUMMARY OF THE INVENTION

The present invention overcomes the shortcomings of prior art externally visible safety-indicating devices and meets the need for a device for making breech-loading weapons verifiably safe for non-firing closed-breech use, by providing an inexpensive, simple, and lightweight device including a chamber plug which fits into the breech of the firing chamber of such a weapon and prevents insertion of a cartridge. Combined with the chamber plug is an easily visible indicator which is located outside the weapon, but is connected with the chamber plug by a connector member which extends generally radially between the indicator and the chamber plug. The connector member is small enough to pass through an available passageway from the interior of the breech of the firearm to the outside, allowing the breech of the firing chamber to be closed in the normal manner, in order to exclude contaminants from the interior of the firing chamber.

In a preferred embodiment of the invention a plug fits in the breech of the firing chamber of a single-shot breech-loading weapon such as an M203 Grenade Launcher, and an arcuate indicator located outside the weapon extends rearwardly from the function of the chamber and the breech block of the weapon, prominently covering a portion of the receiver of such a grenade launcher. A connector portion extends radially downward from the rear edge of the chamber plug through a recess providing room for an extractor, to connect the chamber plug to the indicator. Because the connector includes an aperture large enough to admit the extractor, the breech of the weapon can be fully closed while the safety device is in place preventing insertion of a cartridge into the firing chamber.

Physical support for the indicator is provided by the chamber plug's presence in the firing chamber. Therefore, presence of the indicator, in its easily visible position covering a portion of the receiver, gives a positive indication that the firing chamber is plugged, and that the weapon therefore cannot be fired.

It is therefore, a principal object of the present invention to provide a positively acting safety device by means of which a safe condition of a weapon can be visually verified quickly and positively.

It is another important object of the present invention to provide a safety device for a military weapon which protects the internal mechanisms of such a weapon by permitting the action to be fully closed while the safety device is in place.

PR 0087

ET50265

It is an important feature of the safety device of the present invention that it includes an indicator which extends along the exterior of both sides of a weapon in which the chamber plug of the device is present, providing an indication, clearly visible from either side of the weapon, that the weapon cannot be fired.

It is another important feature of the safety device of the present invention that the indicator and the chamber plug are interconnected by a connector which is small enough that the breech of a weapon in which the device is used may be fully closed and locked, permitting the weapon to be handled and carried as if it were loaded, but with complete safety.

It is an important advantage of the safety device of the present invention that it makes it possible to verify more easily than was previously possible that a breech-loading weapon with its breech closed is in a safe condition.

It is another important advantage of the safety device of the present invention that it makes it possible to verify that a single-shot breech-loading weapon is in a safe condition from a greater distance than possible without such a device.

The foregoing and other objects, features, and advantages of the present invention will be more readily understood upon consideration of the following detailed description of the invention taken in conjunction with the accompanying drawings.

BRIEF DESCRIPTION OF THE DRAWINGS

FIG. 1 is a side elevational view of a grenade launcher equipped with a safety device embodying the present invention.

FIG. 2 is a perspective view, at an enlarged scale, of the safety device shown in FIG. 1.

FIG. 3 is a perspective view of a part of the grenade launcher shown in FIG. 1, with its breech open, together with the safety device shown in FIG. 1.

FIG. 4 is a partially cutaway view of a portion of the grenade launcher shown in FIG. 3, together with the safety device shown in FIG. 1.

FIG. 5 is a partially cutaway view of a safety device which is an alternative embodiment of the present invention

DETAILED DESCRIPTION OF THE INVENTION

Referring now to the drawings, in FIG. 1 an exemplary safety device 10 according to the present invention is shown in place on a grenade launcher 12 which may be of the M203 design used by the armed forces of the United States, and which is ordinarily used mounted upon a rifle such as the M-16 rifle 14 shown partially in FIG. 1. The grenade launcher 12 includes a receiver portion 16 whose forward portion includes a breech block 18. A grenade launching tube 20 extends forward from a position adjacent the breech block 18 and includes as its rearmost portion a firing chamber 22 (FIGS. 3 and 4). The launching tube 20 is slidable longitudinally along the frame of the grenade launcher 12, beneath the rifle 14, as indicated by the arrow 24, so that a cartridge may be inserted into the open breech of the firing chamber 22 when the launching tube 20 is in a forward position, spaced apart from the breech block 18. The launching tube must be latched into its rearward position with the breech end of the structure of the firing chamber 22 abutting the breech block 18 in order to discharge a cartridge and thereby launch a grenade from the launching tube 20.

In order to prevent insertion of a cartridge into the firing chamber 22, the safety device 10 of the present invention includes a chamber plug portion 24, shown most clearly in FIG. 2. The chamber plug 26 may be tubular in form to minimize its weight and has a diameter 28 which fits easily within the breech end of the firing chamber 22, blocking entry of a cartridge into the firing chamber 22. A wall 29 may be provided at the rear end of the chamber plug 26 to prevent a cartridge of a smaller diameter from being inserted into the firing chamber 22 within the chamber plug 26.

An indicator portion 30 of the safety device 10 is approximately semicircular, having the form of one half of a short length of tube having an inside diameter 32 which is great enough to surround the lower half of the receiver 16 in the vicinity of the breech block 18, so that respective side portions 34 and 36 of the indicator 30 are easily visible on their respective sides of the grenade launcher 12 when the safety device 10 is in place as shown in FIG. 1.

It will be apparent that other shapes could be used for the indicator 30, the principal object being to provide a strikingly visible indicator of great enough size to be seen at a considerable distance away from the firearm with which the safety device 10 is being used. For example, an indicator might extend forward, surrounding a portion of the launching tube 20, rather than extending rearward and surrounding the breech block 18.

Rigidly interconnecting the chamber plug 26 and the indicator 30 is a connector 38. In the embodiment of the invention shown in FIGS. 1-4, the connector 38 is generally semicylindrical in shape, with its longitudinal axis extending radially, downward, from the bottom rear part of the chamber plug 26 to the bottom forward edge of the indicator 30.

The semicylindrical connector 38 fits within a similarly shaped extractor recess 40 located in the bottom rear edge of the wall of the firing chamber 22, as may be seen in FIGS. 3 and 4. The breech block 18 and the extractor recess 40 together define a passageway communicating between the interior of the firing chamber 22 and the exterior of the firearm.

As shown in FIG. 3, the chamber plug 26 of the invention is placed into the breech end of the firing chamber 22 when the launching tube 20 is in a forwardly displaced position. Thereafter, the launching tube 20 is moved rearwardly toward the breech block 18 and latched into place in its breech-closed configuration as shown in FIGS. 1 and 4.

As there is an extractor 42 located on the bottom of the forward face of the breech block 18, an aperture 44 extends longitudinally through the connector 38, permitting the extractor 42 to extend therethrough when the launching tube 20 is latched in its breechclosed fully rearward position as shown in FIG. 1. The aperture 44 and the relative position of the extractor 42, when the grenade launcher is latched closed in its ready-to-fire configuration, are shown somewhat more clearly in FIG. 4, where portions of the grenade launcher 12 are cut away. A portion of the rear edge of the indicator 30 defines an opening at 46 to provide clearance for the downwardly protruding ears 48 which support the trigger guard of the grenade launcher 12.

Referring now also to FIG. 5, a safety device 50 which is an alternative embodiment of the invention is generally similar to the safety device 10, including a

PR 0088

ET50266

short tubular chamber plug portion 26' and a short rearwardly located semicircular indicator portion 30'. However, the safety device 50 differs from the safety device 10 in that the chamber plug 26 is connected with the indicator 30' by a generally radially extending, web-like connector portion 52 which is present in a segment of the circumference of the chamber plug 26'. The web-like connector 52 must be thin enough to fit within a passageway which may be merely the clearance available between the breech end of the wall of the firing chamber and the breech closing element of a weapon with which the safety device 50 is to be used. Nevertheless, the web-like connector 52 must be strong enough to interconnect the chamber plug 26' and the indicator 30' securely, yet thin enough to permit the weapon with which the safety device 50 is to be used to be closed to its normal configuration, in which it would be ready to fire except for the presence of the safety device 50.

The safety devices 10 and 50 may be made of any material which is readily shaped and not likely to damage the grenade launcher, but a preferred material is an easily molded plastic which is suitably sturdy, inexpensive, and able to withstand the temperatures which might be encountered when the safety device is placed into the firing chamber after use of the grenade launcher or other firearm.

The safety device 10 or 50 of the present invention, as has been described hereinabove, is simple to manufacture and easy to use, and permits a firearm to be handled and carried just as if it were loaded, as during training in use of the weapon, although the weapon is perfectly safe because it cannot be loaded as long as the safety device 10 or 50 is in place.

It will be appreciated that the safety device of the invention will also be usable with other firearms of which the breech block and the breech end of the barrel are movable relative to one another but must be in a closed, locked, ready-to-fire configuration for realistic handling during training in their use.

The terms and expressions which have been employed in the foregoing specification are used therein as terms of description and not of limitation, and there is no intention, in the use of such terms and expressions, of excluding equivalents of the features shown and described or portions thereof, it being recognized that the scope of the invention is defined and limited only by the claims which follow.

What is claimed is:

1. An externally visible safety device for a breech loading firearm having structure defining a firing chamber for receiving a cartridge to be fired and a breech-closing member for selectively closing a breech opening of said firing chamber, said structure defining a firing chamber and said breech-closing member cooperatively defining a passageway communicating in a radial direction between the interior of said firing chamber and the exterior of said firearm when said breech is closed by said breechclosing member, the safety device comprising:

(a) a chamber plug of a size which fits within said firing chamber in a position adjacent the breech thereof, preventing placement of a cartridge into said firing chamber;

(b) an indicator which is located in a position visibly exposed externally of said firearm when said chamber plug is located within said firing chamber; and

(c) connector means extending between said chamber plug and said indicator, for connecting said chamber plug with said indicator, said connector means being of a size and shape which fits within said passageway, and said connector means being small enough not to interfere with the closing of the breech of said firing chamber by said breech-closing member.

2. The safety device of claim 1 wherein said firearm includes an extractor associated with said breech-closing member and said passageway includes an extractor recess, said connector means being of a size and shape which fits within said extractor recess, with said connector means extending generally radially therethrough between said firing chamber plug and said indicator when said safety device is located in said firing chamber with said breech thereof closed by said breech-closing member.

3. The safety device of claim 2, said connector means defining an extractor aperture extending therein, said aperture being large enough to receive said extractor when said breech-closing member is in a position closing said breech opening of said firing chamber.

4. The safety device of claim 3 wherein said extractor aperture in said connector means extends generally longitudinally of said firearm when said safety device is operatively located therein.

5. The safety device of claim 1 wherein said passageway includes a circumferential gap extending generally radially between said structure defining a firing chamber and said breech-closing member, and wherein said connector means includes a radiallyextending web disposed about a predetermined segment of said chamber plug.

6. The safety device of claim 1 wherein said firearm includes a receiver having respective left and right sides and wherein said indicator extends rearwardly of said chamber plug and is disposed exteriorly adjacent at least a part of each of said left and right sides of the receiver of said firearm.

7. The safety device of claim 1 wherein said indicator is substantially semicircular in shape and includes respective left and right side portions each extending adjacent a respective side of said firearm.

8. The safety device of claim 1 wherein said indicator is of a bright color.

9. The safety device of claim 1 wherein said safety device is of monolithic molded plastic construction.

10. The safety device of claim 1 wherein said connector means extends generally radially relative to said firing chamber.

11. The safety device of claim 1 wherein said connector means is fixedly attached to said chamber plug and said indicator.

12. The safety device of claim 1 wherein said firearm has a left side and a right side, said indicator including structure located so as to be conspicuously visible on both of said left and right sides of a firearm in which the safety device is installed.

13. In combination with a breech loading firearm including structure defining a firing chamber for receiving a cartridge to be fired, said firing chamber defining a breech opening, and said firearm further including a breech block for selectively closing said breech opening and structure defining a passageway communicating in a radial direction between the interior of said firing chamber and the exterior of said firearm when said breech is closed by said breech block, an externally visible safety device, comprising:

PR 0089

ET50267

(a) chamber plug means of a size which fits within said firing chamber, for preventing entry of a cartridge into said firing chamber;

(b) an indicator located in a position visibly exposed externally of said firearm; and

(c) connector means extending between said chamber plug and said indicator, for connecting said chamber plug with said indicator, said connector means

being of a size and shape which fits within said passageway, and being small enough not to interfere with the closing of the breech of said firing chamber structure by said breech block.

14. The safety device of claim 13 wherein said firearm is a grenade launcher and said passageway includes an extractor clearance recess.

o o o o o

PR 0090

ET50268

United States Patent [19]

Dornaus et al.

[11] **Patent Number: 4,726,136**

[45] **Date of Patent: Feb. 23, 1988**

[54] **FIREARM SAFETY DEVICES**

[75] Inventors: Thomas F. Dornaus, Bellflower; Michael F. Dixon, Huntington Beach, both of Calif.

[73] Assignee: Dornaus & Dixon Enterprises, Huntington Beach, Calif.

[21] Appl. No.: 643,254

[22] Filed: Aug. 22, 1984

[51] Int. Cl.[4] F41C 11/02

[52] U.S. Cl. 42/70.08; 42/70.01

[58] Field of Search 42/70.01, 70.08

[56] References Cited

U.S. PATENT DOCUMENTS

580,924	4/1897	Browning	42/70 R
580,926	4/1897	Browning	42/70 R
708,794	9/1902	Browning	89/145
747,585	12/1903	Browning	42/70 F
808,003	12/1905	Browning	42/70 R
954,441	4/1910	Krag	89/138
962,137	6/1910	Gates	89/196
984,519	2/1911	Browning	89/145
989,432	4/1911	Schmeisser	89/163
1,028,032	5/1912	Krag	89/145
1,103,404	7/1914	Loiseler	89/196
1,181,416	5/1916	Wesson	89/145
1,618,510	2/1927	Browning	89/163
2,846,925	8/1958	Norman	89/145
3,110,223	11/1963	Schleppich	89/196
4,021,955	5/1977	Curtis	42/70.08
4,031,808	6/1978	Roville	89/163
4,141,166	2/1979	Schultz	42/70 B X

FOREIGN PATENT DOCUMENTS

146359	6/1985	European Pat. Off.	42/70.08
3323501	1/1985	Fed. Rep. of Germany	42/70.08

Primary Examiner—Peter A. Nelson
Attorney, Agent, or Firm—Morland C. Fischer

[57] ABSTRACT

A firearm is provided having a firing pin block which pulls the firing pin away from the hammer independently of the hammer actuator mechanism. A loaded chamber indicator includes a pivoting indicator lever resistant to breakage and jamming. The firearm also has a reversible thumb safety which is readily inserted, releasably retained and fully operational in either side of the firearm. An ambidextrous thumb safety includes two shaft portions each having integral levers and adapted to mate together to form a single shaft. A selective magazine catch is also provided which allows the shooter to select between a magazine catch mode and a magazine free fall mode.

22 Claims, 20 Drawing Figures

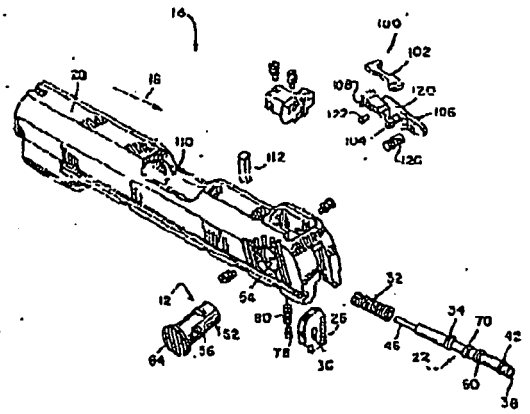

PR 0091

ET50269

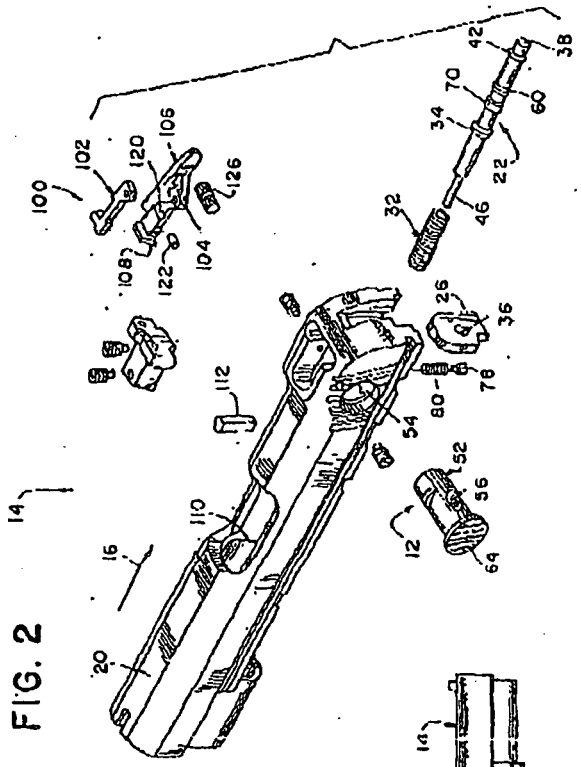

FIG. 2

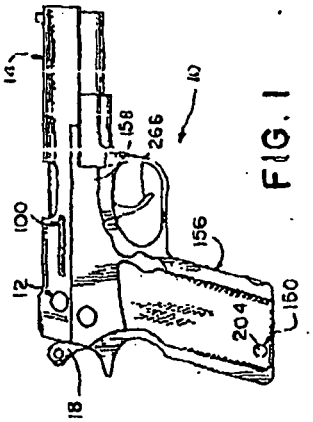

FIG. 1

PR 0092

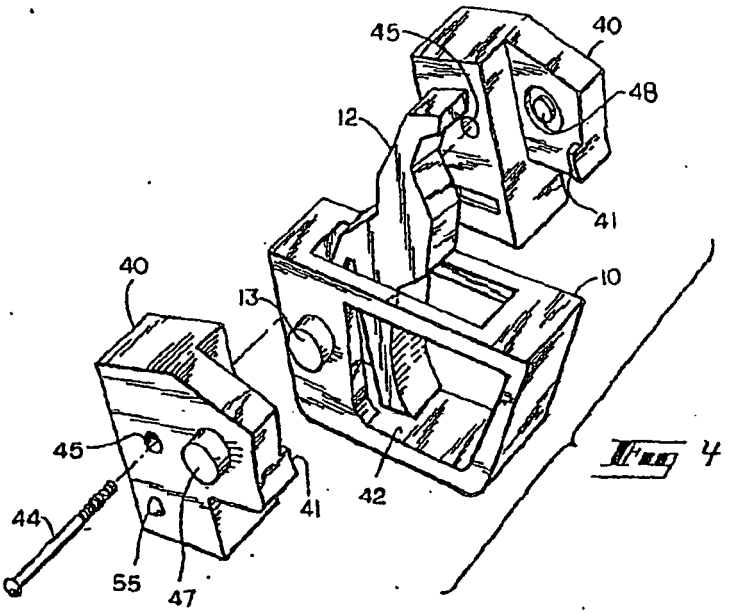

Fig 4

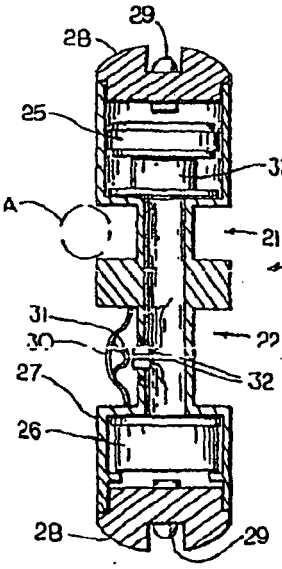

Fig 3

PR 0093

ET50271

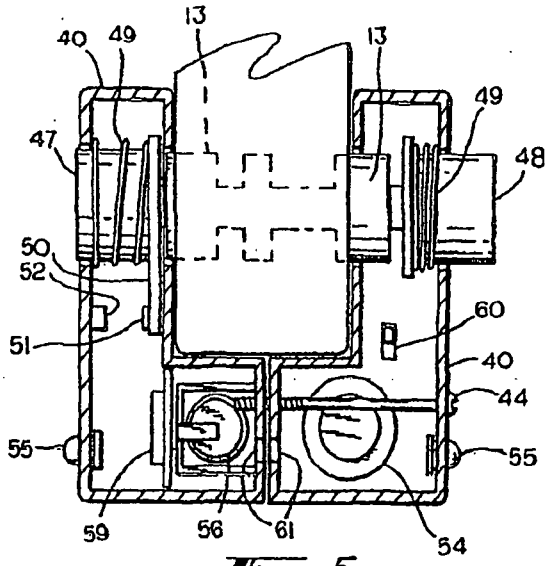

Fig 5

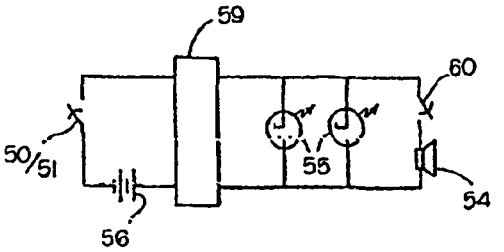

Fig 6

PR 0094

ET50272

TRIGGER SAFETY STATUS SIGNALING DEVICE

TECHNICAL FIELD

This invention relates generally to trigger safety devices for firearms, and particularly to devices for generating signals indicative of the operative status of trigger safeties.

BACKGROUND OF THE INVENTION

Firearms, such as shotguns, rifles and pistols, are commonly provided with a safety for use in preventing accidental actuation of a trigger. The safety is typically in the form of an elongated bar or button that is mounted to the trigger housing or guard. The safety is designed to be manually movable along a reciprocal path of travel between a safety-on position, where it stops and prevents the trigger from being moved to a fire position, and a safety-off position where it does not interfere with movement of the trigger to the fire position. In order to indicate the status of the safety, the safety often has a portion that is colored red which is exposed and observable whenever the safety is in the safety-off position. This serves as warning to the use of the firearm that the safety is off and the trigger enabled.

Heretofore, it has been recognized that passively observable warnings on firearm safeties such as color-coded signals may go unnoticed unless the firearm user actually looks at and observes the position of the safety switch. In order to provide an active warning signal, firearms have been equipped with luminous and audio signal means for generating a light and/or sound whenever the safety is in the safety-off position. Exemplary of such active safety status signaling devices are those shown in U.S. Pat. Nos. 66,405, 2,134,406 and 3,044,204.

To provide firearms with active signals has heretofore required that the firearms themselves be modified to a substantial extent. For example, firearms with active safety signaling devices have typically had cavities formed in their stocks in which a set of batteries are replacably housed. Channels communicate with these cavities through which wiring extends that couples the batteries with switch mechanisms actuated by the safety. The gun stocks have also been altered to provide audio or luminous signal means that are powered by the batteries and operated in response to the switching mechanism associated with the safety.

Firearms with active trigger safety status signal devices have not met with significant commercial success because of the extent of firearm modification required and due to the fact that they have been permanently incorporated whereby they are present whether or not the user desires such a feature. Accordingly, it would provide a distinct advance in the art where a trigger safety status signaling device devised that could be readily attached and detached from existing firearms in a simple and expedious manner and that would require minimal or no alteration of the firearm itself. Accordingly, it is to the provision of such a signaling device that the present invention is primarily directed.

SUMMARY OF THE INVENTION

In a preferred form of the invention, electrically powered signaling means is provided for a firearm of the type having a trigger mechanism that includes a trigger housing or guard, a trigger mounted to the trigger guard for movement between a cocked and a fire position, and a safety mounted to the trigger guard for movement between a safety-on position that prevents the trigger from being moved to the fire position and a safety-off position that permits the trigger to be moved to the fire position. The electrically powered signal means is mounted to a component of the trigger mechanism for actuation in response to movements of the safety.

In another form of the invention, a trigger safety status signaling device is provided for a firearm of the type having a trigger guard to which a trigger is mounted for movement between cocked and fire positions and to which a safety is mounted for reciprocal movement along a path of travel that extends through opposite sides of the trigger guard between safety-on and safety-off positions. The signal device includes a bifurcated housing comprised of a pair of housing members each of which is formed with an opening through which the safety may extend. Fastening means are included for attaching the housing members to the trigger guard so as to straddle the guard with the housing member openings aligned with the safety path of travel whereby the path of travel may extend into the housing through the openings with the housing attached to the trigger guard. Electric switch means are also included for coupling and decoupling the signal means with the battery in response to movements of the safety within the housing along the path of travel.

In yet another preferred form of the invention a trigger safety status signaling device is provided for a firearm of the type having a trigger guard to which a trigger is mounted for movement between cocked and fire positions and to which a safety is mounted for reciprocal movement along a path of travel between safety-on and safety-off positions at which the safety is releasibly held by detent means. The signal device comprises a battery and an electrically operable signal means mounted to the safety. Electrical switch means are mounted to the safety for actuation by the detent means in coupling and decoupling the signal means with the battery in response to movements of the safety.

BRIEF DESCRIPTION OF THE DRAWING

FIG. 1 is a perspective view of a firearm trigger mechanism of conventional structure with the mechanism safety shown exploded away from the trigger housing.

FIG. 2 is a perspective view of a firearm safety that incorporates a safety status signaling device of the present invention.

FIG. 3 is a cross-sectional view of the firearm safety signaling device illustrated in FIG. 2.

FIG. 4 is a perspective view of the conventional trigger mechanism shown in FIG. 1 together with a safety status signaling device shown in a position preparatory to mounting to the trigger mechanism which device embodies principles of the present invention in an alternative form.

FIG. 5 is a cross-sectional view of the safety status signaling device of FIG. 4 shown mounted to the trigger mechanism.

FIG. 6 is a schematic diagram of the electrical circuitry of the signaling device illustrated in FIG. 5.

DETAILED DESCRIPTION

With reference next in more detail to the drawing, there is shown in FIG. 1 a trigger mechanism of conventional structure for a firearm which is seen to com-

prise a trigger guard and housing 10 to which a trigger 12 is pivotably mounted for clockwise movement, as viewed in FIG. 1, from a trigger cocked position to a trigger fire position. Here, the mechanism that is operated by the trigger 12 in actuating a firing pin or otherwise discharging the firearm is not shown but is of conventional structure. The trigger mechanism is seen to have a safety or safety switch, indicated generally at 13, which is mounted for sliding movement within a channel 14 formed in the trigger guard 10 rearwardly of the trigger 12. The safety 13 is generally in the shape of an elongaged pin of stepped, cylindrical shape that has two annular recesses or indentures 15 spaced therealong in which an unshown spring biased, detenting ball element may reside in holding the mechanism alternatively in a safety-on or safety-off position. When the safety switch 13 is in the safety-on position it is located so that its larger diameter surface stops and limits any clockwise movement of the trigger 12 from its cocked position and thereby prevent the trigger from actuating the associated firing mechanism. Conversely, when the safety is in its safety-off position the trigger may move within a recess 15 and activate the firing mechanism. The trigger mechanism and safety of FIG. 1 is thus of conventional structure.

With reference next to FIGS. 2 and 3, a combination safety and safety status signaling device is shown at 20. The device has the same external shape as the conventional safety 13 of FIG. 1 in that it is of generally cylindrical shape and has two axially spaced recesses 21 and 22 in which a spring biased detent ball A may be positioned for releasibly holding the safety in one of two positions, as shown in FIG. 3. The device 20 here, however, is seen to be hollow and to house a battery 25 and a sound generator or speaker 26 which may generate audio signals that pass through an annular set of openings 27, as shown in FIG. 2, to ambience. The device has a tubular housing member 27 whose ends are closed by end caps 28 to each of which a light emitting diode 29 is mounted. The end caps are preferably removably mounted here so that they may be removed from time to time to access the interior. Thus, the battery 25 may be accessed for replacement, when needed.

Within the recess 22 is mounted a resilient, plastic strip 30 that is normally flexed outwardly as shown in the drawing. To the inner surface of the strip 30 that faces the axis of the safety is mounted a metallic and conductive contact element 31 adjacent two mutually spaced fixed contacts 32 that are rigidly mounted to the safety. With this construction it is seen that should the strip 30 be depressed, toward the fixed contacts, the movable contact 31 will be brought into direct engagement with the pair of fixed contacts 32 thereby electrically bridging them. When an external depressing force is removed from the strip 30, it springs back to its normal position illustrated in FIGS. 2 and 3 thereby bringing the movable contact 32 away from the fixed contacts whereupon the fixed contacts are no longer electrically shorted. The elements 30, 31 and 32 thus form an electric switch which is actuated by movements of the flexible member 30 to and away from the axis of the safety.

For clarity of illustration electrical wiring is not shown in FIG. 3. However, the circuit is schematically illustrated in FIG. 6 with the exception of the absence of an auxiliary switch 60. Thus, the speaker 26 and the two light emitting diodes 29 are coupled to the battery 25 and thereby energized upon the closure of the switch by the engagement of movable contact 31 to the pair of fixed contacts 32. This is done via a conventional clock 33 which is employed in the circuit to cause the light and audio signals to operate intermittently.

A firearm may be manufactured with the combination safety and signal device illustrated in FIGS. 2 and 3. Alternatively, the device may be substituted for the conventional safety 13 in an existing firearm. Once mounted to the trigger guard housing 10 the dimensions of the safety are such that at least one end will protrude out from a side of the housing. In its safety-on position the safety is located within the trigger housing so that the detent ball A, shown in FIG. 3, is located as shown so that it is not in engagement with the strip 30. Thus, in this position the electric switch is open and audio and luminescent signaling means inoperative as not connected with the battery 25. Once the safety is slid within the housing by manually urging an exposed end inwardly, the safety is repositioned so that the detent A becomes now located within the bounds of recess 22 in direct contact with the resilient strip 30 causing it to be depressed so that movable contact 31 is in direct bridging engagement with the fixed contacts 32. In this safety-off position the speaker 25 and the light emitting diodes 29 are coupled across the battery and thus are intermittently emitting signals. In this mode it will be seen that a light will be flashing from opposite ends of the safety as well as a sound being emitted. If desired, an auxiliary switch may be employed here, as shown by switch 60 in the schematic diagram of FIG. 6, to disable the audio, where desired. Upon the safety being removed back to its safety-on position the electrical switch opens and thereby decoupling the speaker and the light emitting diodes from the battery thereby terminating their operations.

With reference next to FIGS. 4 and 5, the trigger mechanism shown in FIG. 1 comprised of the housing 10, trigger 12 and safety 13 are shown with none of these components in an altered configuration, not even the safety itself. In this embodiment the audio and light signaling means, indicative of the status of the safety, is mounted and dismounted directly to the conventional trigger mechanism itself. Here, the trigger safety status signaling device is comprised of a housing which is bifurcated into two independent housing members 40 that are of a size and shape adapted to be placed against opposite sides of the housing 10 in intimate contact therewith and with a step 41 supported upon a floor 42 of the guard located beneath the trigger 12. A screw 44 may then be threaded through aligned holes 45 in the housing in securing rear portions of the housing members tightly together.

The signaling device is further seen to include a button 47 mounted in one of the housing members and another button 48 mounted in the other housing member which extend through openings in the housing members and into direct contact with opposite ends of the conventional safety 13. These buttons are held against the safety by means of compression springs 49. The button 47 has a dependent arm 50 mounted thereto which carries a movable switch contact 51. This contact is positioned adjacent a fixed contact 52 that is mounted to an inside wall of the housing. Thus, movements of the button 47 serve to bring the contacts 50 and 51 into and out of direct engagement whereby they act as an electrical switch. A speaker 54 and two light emitting diodes 55 are also mounted to the housing and electrically coupled to a battery 56 by the switch

PR 0096

ET50274

formed by the contacts 50/51. A clock 59 and an auxiliary switch 60 are also provided. The electrical wiring that connects the various components of the electrical circuit together is shown only schematically in FIG. 6 but does extend between the two bifurcated housing members by passing through two aligned holes 61 formed in the housings.

For operation the buttons 47 and 48 esentially provide extensions of the conventional safety 13 such that manual actuations of them serve to actuate the conventional safety 13 itself in performing its standard operation of limiting and not limiting movements of the trigger 12. In FIG. 5 the safety is in its safety-on position. In this mode the electric switch provided by contacts 50/51 is open thereby decoupling the audio and visual signaling means provided by the speaker and light emitting diodes from the battery 56. Upon movement of button 48 to the left, as shown in FIG. 5, the safety 13 is urged to a safety-off position and the contacts 50/51 are brought into engagement thereby coupling the signaling means with the battery and actuating them. In this position the light emitting diodes 53 and the speaker emit warning signals that the safety is in its off position. In the event it should become desired to disable the speaker, such may be done by the actuation of an auxiliary switch 60 to its open position, as shown in FIG. 6. In the event it should become desirable to remove the signal device from the firearm, this may simply be done by removing the screw 44 whereupon the housing components and associated signaling means and circuitry are removed leaving the conventional trigger mechanism in place.

It thus is seen that a trigger safety status signaling device is provided which may be easily mounted and dismounted to a firearm in a manner that overcomes deficiencies of those of the prior art. It should be understood, however, that the just described embodiments merely illustrate principles of the invention in two preferred forms. Many modifications, additions and deletions may, of course, be made thereto without departure from the spirit and scope of the invention as set forth in the following claims.

I claim:

1. A trigger safety status signal device for a firearm of the type having a trigger guard to which a trigger is mounted for movement between cocked and fire positions and to which a safety is mounted for reciprocal movement along a path of travel that extends through opposite sides of the trigger guard between safety-on and safety-off positions, and with the device comprising a bifurcated housing comprised of a pair of housing members each formed with an opening through which the safety may extend; fastening means for attaching said housing members to said trigger guard so as to straddle said guard with said housing member openings aligned with the safety path of travel whereby the path of travel may extend into said housing through said openings; a battery and an electrically operable signal means mounted in said housing, and electric switch means for coupling and decoupling said signal means with said battery in response to movements of the safety within said housing along the path of travel.

2. The trigger safety status signal device of claim 1 wherein each of said housing members is formed with a second opening in which a push-button is movably mounted for actuation of the safety.

3. The trigger safety status signal device of claim 2 wherein said push-buttons are spring-biased against opposite ends of the safety.

4. The trigger safety status signal device of claim 3 where said electric switch means includes one switch contact mounted on the inside of one of said housing members and another switch control mounted on one of said push-buttons for movement into and out of engagement with said one contact.

5. A trigger safety status signal device for a firearm of the type having a trigger guard to which a trigger is mounted for movement between cocked and fire positions and to which a safety is mounted for reciprocal movement along a path of travel between safety-on and safety-off positions at which the safety is releasibly held by detent means, and with the signal device comprising a battery and an electrically operable signal means mounted on the safety for actuation by the detent means in coupling and decoupling said signal means with said battery in response to movments of the safety, said switch means comprising a pair of fixed contacts fixedly mounted on said safety and a movable contact movably mounted on said safety for movement between a position spaced from said pair of fixed contacts and a position in bridging contact with said pair of fixed contacts.

* * * * *

PR 0097

ET50275

PR 0098

ET50276

United States Patent (19)
Hagle

(11) Patent Number: 4,719,713
(45) Date of Patent: Jan. 19, 1988

[54] TRIGGER SAFETY STATUS SIGNALING DEVICE

[76] Inventor: Richard A. Hagle, 1494 Bucknell Way, Marietta, Ga. 30067

[21] Appl. No.: 9,742

[22] Filed: Feb. 2, 1987

[51] Int. Cl.[4] F41C 17/02
[52] U.S. Cl. 42/1.01; 42/70.06; 42/84
[58] Field of Search 42/1.01, 70.07, 70.06, 42/70.01, 84

[56] References Cited

U.S. PATENT DOCUMENTS

666,405	1/1901	Baggett	42/1.01
2,134,406	10/1938	Jacobs	42/1.01
3,044,204	7/1962	Zimmerman	42/84

Primary Examiner—Deborah L. Kyle
Assistant Examiner—Michael J. Carone
Attorney, Agent, or Firm—Thomas & Kennedy

[57] ABSTRACT

A firearm trigger safety status signaling device includes electrically energizable audio and light signals that are mounted to a component of the trigger mechanism itself for actuation in response to movements of the trigger safety.

5 Claims, 6 Drawing Figures

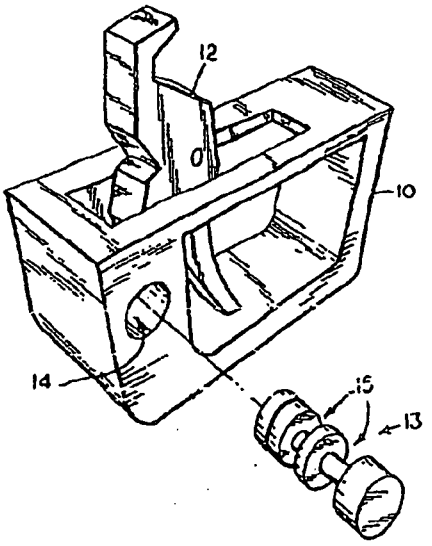

PR 0099

ET50277

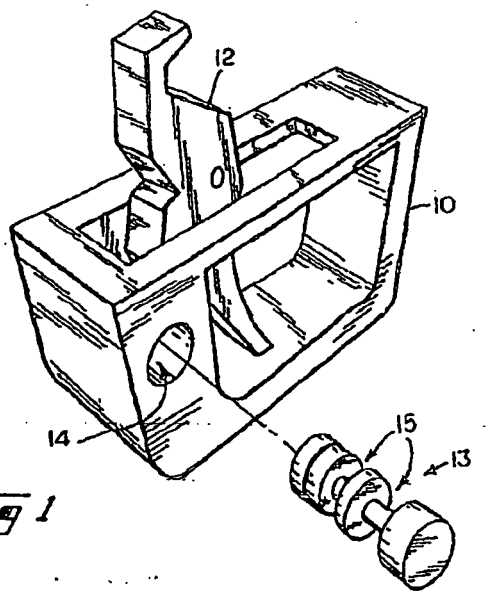

Fig 1

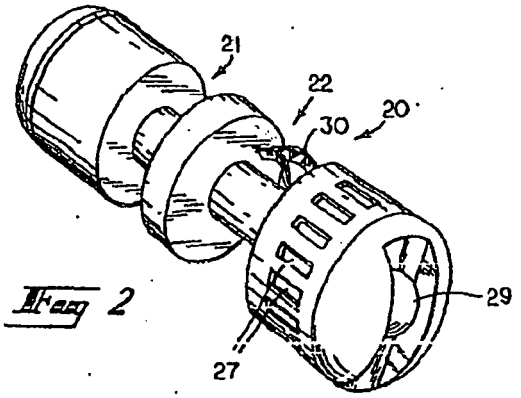

Fig 2

PR 0100

ET50278

FIG. 5

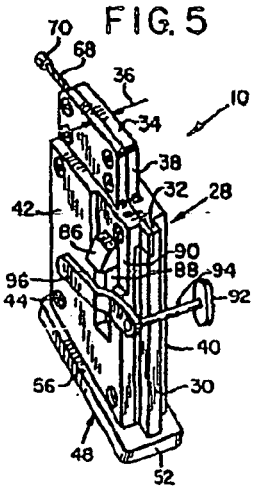

FIG. 6

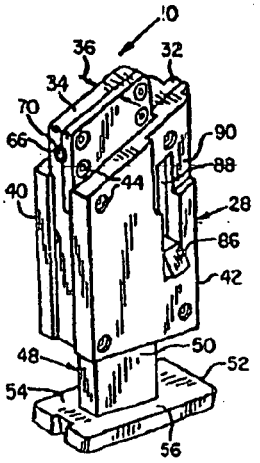

FIG. 7

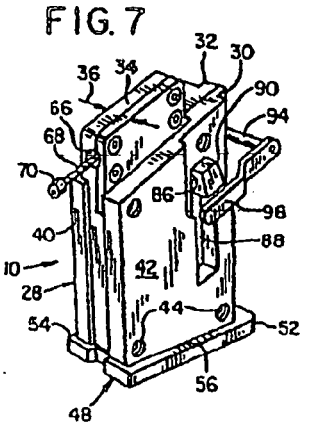

FIG. 8

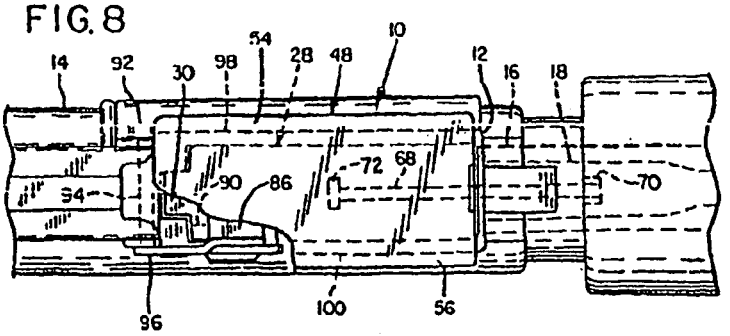

PR 0101

ET50279

SAFETY DEVICE INCLUDING CHAMBER PROBE

BACKGROUND OF THE INVENTION

The present invention relates to firearms, and particularly to a safety device for use in connection with repeating firearms utilizing box-like removable magazines.

Many repeating firearms utilize replaceable magazines which, when in place in such a firearm, exclude dust, sand, and the like from entering internal mechanisms and doing damage or causing failure of the firearm to operate properly. When the replaceable magazine is not in place in such a weapon, however, the loading mechanism and other movable parts of the weapon are exposed to contamination by material carried by the air or otherwise found in the immediate environment.

Some firearms, particularly automatic firearms such as the self-loading M-16 rifle used by the Armed Forces of the United States, have ejection ports through which empty cartridge cases are ejected upon firing of the weapon. Although the empty case ejection port in many self-loading weapons is another potential point of entry for contaminants into the working mechanisms of the weapon, the M-16 rifle is equipped with a hinge-mounted cover which may be closed to protect the internal mechanisms of the rifle against such contamination. Thus, the M-16 and similar rifles, when a magazine is in place and the ejection port cover is closed, are relatively well-protected against contamination.

Safety is of prime importance in conducting military training exercises. For the sake of safety, however, soldiers have been permitted to carry an M-16 or similar rifle during some military training exercises only with the magazine removed, the ejection port cover open, and the bolt withdrawn rearwardly to an open position exposing the breech of the firing chamber, so that it could be clearly seen that the weapon was unloaded and not able to be fired, either accidentally or otherwise.

While use of the M-16 in such training exercises was thereby made safe, the working mechanisms of the rifle were exposed to possible contamination. Particularly when these requirements for the sake of safety were carried out during exercises performed in desert sand conditions, the weapons were exposed to entry of contaminating materials which caused a significant number of the weapons to malfunction in later use, unless internal working mechanisms of the weapons were carefully cleaned first. Such cleaning takes an undesirably long time to ready such basic infantry weapons for service use after their use in training exercises.

It is necessary to be able to carry out infantry training exercises safely, but without excessive risk of damage to weapons, and without requiring an unduly long period of time to make weapons ready for actual use thereafter.

Not only is it desirable for weapons to be in a safe condition during military training exercises, but it is also desirable that such a safe condition should be easily and quickly verifiable from a distance of at least several meters, so that it is quickly obvious to a commander if any of his men's weapons have not been properly made safe.

While a weapon may be made safe by removal of an essential part such as a firing pin, such a procedure has two problems. First, it may be difficult to verify that the procedure has been actually carried out and that the weapon is no longer capable of being fired. Second, there is a risk that a part which has been removed from its proper location might be lost or damaged so that it would be difficult or impossible to restore the weapon to its normal useful condition.

Johnson U.S. Pat. No. 4,528,763 discloses an externally visible safety device which effectively meets the need stated above, except that it does not preclude the somewhat remote possibility that a cartridge might be located within the firing chamber of the weapon, ready to be discharged immediately, should the safety device be removed. What is needed then, is a device which will positively prevent a weapon, particularly an automatic-loading weapon such as a military rifle, from being fired accidentally, or from even having a round of ammunition located in its chamber, and which will make it easily verifiable visually, from a considerable distance away from the weapon, that the weapon is incapable of being fired, and that the weapon does not contain any ammunition. Such a device ideally should be straightforward, inexpensive, and easy to use, should allow the weapon to be made safe without thereby exposing internal working parts to contamination, and should leave the weapon able to be made reliably ready for firing quickly and without disassembly or cleaning thereof.

SUMMARY OF THE INVENTION

The present invention provides an improvement over the prior art devices and meets the need for a reliable device for making automatic-loading rifles and the like safe for non-firing use during military training exercises, by providing a positively acting, easily visible safety device which can be installed through the magazine well of an automatic-loading weapon, but only when the chamber is clear of cartridges. When installed, the safety device is retained in the magazine well in place of the normal magazine by the latch which normally is used to secure a magazine, and prevents firing, while excluding dirt from the internal mechanisms of the weapon.

Because a portion of the safety device normally extends upwardly between the front of the breech bolt and the breech opening of the firing chamber, the main body of the safety device cannot be inserted fully into a weapon when the bolt is closed. When the safety device of the present invention is in place it prevents the release of a latch included in the weapon to hold the breech bolt of the weapon securely in its rearwardly located open position. Additionally, inserting the device of the present invention into the weapon interposes a physical obstruction between the breech bolt and the breech opening of the firing chamber, thus preventing the bolt from moving forward to close the breech.

A movable chamber probe extends into the firing chamber of the weapon when the safety device is installed, as a precaution against the presence of any rounds of ammunition. Complete installation of the safety device into the magazine well, so that the magazine latch will retain the safety device, requires that the firing chamber be empty, since the latching portion of the safety device cannot be moved into mating engagement with the magazine latch mechanism of the weapon unless the movable chamber probe associated with the main body of the device is able to enter the chamber. The safety device will not remain in place only partially inserted into the weapon. Even when the main body is inserted fully into the weapon with its upper portion between the face of the breech bolt and the breech

PR 0102

ET50280

opening of the firing chamber, a large portion of the safety device is clearly visible extending outwardly beyond the opening of the magazine well, unless the chamber probe is extended into the chamber and the latch detent of the safety device is matingly engaged with the magazine latch mechanism of the weapon.

The safety device of the present invention includes flanges which rest against the outer edges of the magazine well into which the device is placed, to prevent entry of dust and grit into the magazine well when the safety device is installed and properly latched in place. Preferably, at least a portion of the safety device is made of a conspicuously brightly colored material, so that the flanges are clearly visible from some distance on either side of a weapon in which the safety device is installed.

With the safety device of the present invention properly latched into its fully inserted location in the magazine well it is clearly apparent that no cartridge is present in the firing chamber, and that the breech bolt is latched in its rearwardly withdrawn, open position. Therefore, the ejection port of a weapon such as the M-16 rifle used by the United States Armed Forces need not be left open to verify that the weapon has been made safe. Instead, the ejection port cover may be closed to protect the working mechanisms of the weapon from contamination by airborne dirt.

It is therefore a principal object of the present invention to provide a positively acting safety device whose presence and proper installation can be visually verified quickly and positively.

It is another object of the present invention to provide a safety device for military weapons which protects the internal moving mechanisms of such weapons against entry of dirt or sand when there is no magazine installed in the magazine well.

It is a principal feature of the present invention that it includes a chamber probe linked with a plunger carrying the latch detent which holds the device in place, so that the plunger cannot be moved to a position permitting the safety device to be latched in place within the magazine well of the weapon unless the probe is in place within the firing chamber.

It is another important feature of the safety device of the present invention that it includes a conspicuous flange which remains outside the magazine well of an automatic-loading rifle in which the safety device of the present invention is used, in order to provide an indication, clearly visible from either side of the weapon, that the weapon is safe.

It is yet a further feature of the safety device of the present invention that it includes a top portion which prevents insertion of the main body of the safety device into a weapon unless the bolt of the weapon is first fully withdrawn from the breech of the firing chamber and remains in such an open position.

It is an important advantage of the safety device of the present invention that, when installed, it provides an additional factor of safety of the weapon by indicating that there is no cartridge in the firing chamber and that the breech bolt is withdrawn and latched in its open position.

The foregoing and other objectives, features, and advantages of the present invention will be more readily understood upon consideration of the following detailed description of the invention taken in conjunction with the accompanying drawings.

BRIEF DESCRIPTION OF THE DRAWINGS

FIG. 1 is a right side elevational view, partially cut away, of part of an automatic rifle in which a safety device embodying the present invention is installed

FIG. 2 is a left side elevational partial view of the automatic rifle shown in FIG. 1, showing the safety device of FIG. 1 partially installed.

FIG. 3 is an exploded perspective view of the safety device shown in FIG. 1.

FIG. 4 is a left side elevational view of the safety device shown in FIG. 1, with a side cover portion thereof removed.

FIG. 5 is a perspective view, taken from the upper left rear, of the safety device shown in FIG. 1, showing the safety device as if it were properly installed within the rifle shown in FIG. 1.

FIG. 6 is a perspective view, taken from the upper left front, of the safety device shown in FIG. 1 as it appears when it is not installed in a rifle.

FIG. 7 is a view similar to FIG. 6, showing the condition of the safety device when it is properly installed in the magazine well of a weapon.

FIG. 8 is a bottom view of a portion of the rifle shown in FIG. 1, at an enlarged scale, with the safety device shown in FIG. 1 installed therein.

DETAILED DESCRIPTION OF THE INVENTION

Referring first to FIGS. 1-3 of the drawings, a safety device 10 embodying the present invention is shown in its operative position in the magazine well 12 of an automatic-loading rifle 14 similar to the model M-16 rifle used by the Armed Forces of the United States of America. For the sake of clarity, parts of the rifle 14 are shown in phantom lines in FIGS. 1 and 2. The rifle 14 includes a barrel 16 having a firing chamber 18 with a breech opening 20 located at the rear end of the barrel 16. A breech bolt 22 is reciprocatingly movable between a rearward, or open, position in which the bolt 22 is located as shown in FIGS. 1 and 2, and a forwardly-located, closed position in which the bolt 22 abuts against the rear end of the barrel 16, closing the breech opening 20. A bolt stop latch 24 is shown in FIG. 1 in a raised position, in which it is ahead of a portion of the front end 26 of the bolt 22, holding the bolt 22 in the open position.

A magazine 27, whose lower end is shown in broken line in FIG. 1, is normally held with its upper end within the magazine well 12 when the rifle 14 is loaded. Such a magazine 27 is removable to permit rapid reloading of the rifle 14 by replacement of an emptied magazine 27 with a fully loaded one. However, when no magazine 27 is present in the magazine well 12 the bolt 22 and other moving parts are exposed within the magazine well 12. Thus, when the magazine 27 is removed as a safety precaution, the internal parts of the action of the rifle 14 are susceptible to damage from abrasive dirt and open to entry of particles which could lodge in the action of the rifle 14, causing it to malfunction.

The safety device 10, shown in greater detail and at an enlarged scale in FIGS. 4-8, includes a generally rectangular main body 28. The exterior configuration of the main body 28 corresponds with the shape of the portion of a magazine 27 which fits within the magazine well. A rectangular spline 30 extends vertically along the rear side of the body and includes a surface or pad 32 at its upper end. The location of the pad 32 corre-

PR 0103

ET50281

sponds to that of a tab (not shown) connected to a cartridge follower of the magazine 27 when the rifle 14 is empty and the bolt 22 is open.

A top portion 34 having a width 36 narrower than the width of the main body 28 is located atop the main body 28 and extends above the height of the pad 32. The top portion 34 includes a generally vertical rear face 38.

The main body 28 includes a right side portion 40 and a left side, or cover, portion 42 which are ordinarily held together permanently, either by a plurality of fasteners such as nonremovable screws 44, or by adhesives, thermal welding, or other suitable manner of attachment which will not permit the cover portion 42 to be removed without significant difficulty. The right side portion 40 defines a cavity 46 within which a plunger 48 is disposed. The plunger includes an elongate body portion 50 and a base portion 52 which extends outwardly around the bottom end of the elongate body 50 of the plunger, defining a pair of flanges 54 and 56 on respective sides. In the safety device 10, designed for use particularly with an M-16 rifle, the flanges slope upwardly from the rear to the front of the main body 28, so that they tightly close the bottom of the magazine well 12. The flanges are thick enough (for example, being about 3/16 inch thick) to be clearly visible beneath the magazine well 12 when the safety device is in place, and to be used conveniently as a grip when removing the safety device 10 from the magazine well 12.

The right side portion 40 of the main body 28 defines a channel 58 within which the body 50 of the plunger 48 is slidably disposed, and a head 60 extends forwardly and rearwardly of the body 50 at its upper end, to prevent the plunger from being completely removed downwardly from within the cavity 46.

The main body 28 includes an arcuate passageway such as the connector slide channel 62 defined in the right side portion 40. The channel 62 may be U-shaped in profile, and extends upwardly above the cavity 46 and thence arcuately toward a front face 64 of the top portion 34, where a seat 66 is provided. The seat 66 is a generally cylindrical, forwardly-open cavity, of which a part may be defined by the left side portion 42 of the top section 34. Disposed within the connector slide channel 62 is a cable 68, which may be of twisted steel wire construction, or of other moderately flexible construction which is not significantly compressible longitudinally. A cylindrical tip 70 is swaged or cast onto a first end of the cable 68, extending concentrically and coaxially along the first end of the cable 68 from its extremity while a connector lug 72 is attached at the second end of the cable 68. The connector lug 72 may also be a cylindrical member, but is oriented transverse to the cable, so as to fit into a cylindrical socket 74 which extends transversely into a side of the plunger body 50. A groove 76 extends upwardly along the plunger body 50 to its end from the socket 74, in a position aligned with the connector slide channel 62, so that the cable 68 extends freely slidably into the lower end of the connector slide channel 62.

A long, slender helical compression spring 78 has a first end seated in a bore 80, while a guide rod 82 is disposed within the spring 78 and the bore 80. A bent over upper end of the guide rod 82 is seated in a short transverse bore at the upper end of a groove 84 defined in the right portion 40 of the main body 28. Thus the guide rod 82 remains stationary with respect to the right portion 40, while the spring 78 urges the plunger 50 outwardly from the cavity 46, to the extent permitted by the head 60.

The length of the cable 68 is chosen so that when the plunger 50 is extended fully to a position in which the head 60 is located at the bottom of the cavity 46, with the connector lug 72 seated in its socket 74 and the cable 68 in the connector slide channel 62, the tip 70 is housed in the seat 66 defined in the front face 64 of the top portion 34 of the main body 28, as illustrated in FIG. 4.

A latch detent 86 extends leftward laterally from the rear end of the head 60 of the plunger 48 and protrudes laterally outward through a slot 88 defined in the left side, or cover portion 42. A depressed area 90 is provided in the outer face of the left or cover portion 42, surrounding the upper end of the slot 88, so that the outer end of the latch detent 86 extends outward a distance beyond the outer surface of the left cover portion 42 within the depressed area 90.

The main body 28 and spline 30 fit slidably within the magazine well portion 12 of the rifle 14, occupying the space which normally is occupied by the upper portion of the magazine 27 when the rifle 14 is loaded, and the size of the main body 28 approximates that of the interior of the magazine well 12. The width of the spline 30 and the distance to which the spline 30 extends rearwardly behind the rear side of the main body are determined by the interior dimensions of the magazine well 12, so as to provide a sliding fit for the spline 30 within a cartridge follower channel, provided in the rear portion of the magazine well 12 to allow movement of a tab of the cartridge follower (not shown) of the magazine 27. The spline 30 thus fills the cartridge follower channel to prevent entry of dirt when the safety device 10 is located operatively in the rifle 14. The magazine well 12 has an interior depth 31 (FIG. 1), the distance from its magazine-receiving opening to the location of the bolt 22 in the receiver portion of the rifle 14. The interior of the magazine well 12 similarly has an interior width extending laterally of the rifle 14, and an interior length, extending longitudinally of the rifle 14

When the safety device 10 is operatively in use in a rifle 14, as shown in FIG. 1, it is retained within the magazine well 12 by the magazine latch mechanism of the rifle 14. The magazine latch mechanism includes a push button 92, located on the right side of the rifle 14, and a push rod 94 (shown in FIGS. 5, 7 and 8) which is biased toward the right side of the rifle by a latch spring (not shown). A catch 96 extends forward along the left side of the rifle 14, as shown in FIG. 2, and ordinarily engages a detent (not shown) located on the left side of a magazine such as the magazine 27, to hold the magazine in place within the magazine well 12.

The latch detent 86 has a sloping upper surface which is inclined downwardly and outwardly with respect to the left side of the safety device 10, as well as a generally horizontal bottom surface which extends horizontally outward from the left side of the safety device. Thus, as the plunger 48 of the safety device 10 is moved upwardly into the magazine well 12, the sloping surface of the latch detent 86, acting as a wedge, urges the magazine latch catch 96 leftward. Once the safety device 10 has been fully inserted into the magazine well 12, the catch 96 is free to move rightwardly, urged by the latch spring, into a latching position beneath the detent 86 and partially within the depression 90, retaining the safety device 10 within the magazine well 12, and retaining the plunger 48 in its inward position relative to the main body 28.

PR 0104

ET50282

Ordinarily, when the safety device 10 is not installed within a weapon such as the rifle 14, the plunger 48 is extended, with the base 52 separated from the main body portion 28 of the safety device 10, exposing a portion of the body 50 of the plunger outside the main body 28. When the plunger 48 is thus extended from within the main body 28, the latch detent 86 is located in the bottom of the slot 88 as shown in FIG. 6. Since the cable 68 is connected to the plunger 48, it is withdrawn as a result of the extension of the plunger 48, so that the tip 70 is located within the socket 64, where the chamber probe does not interfere with installation or removal of the safety device 10.

For the safety device 10 to be inserted into its proper location the bolt 22 must first be withdrawn rearwardly to its open position in which it is held by the bolt latch 24 as shown in FIGS. 1 and 2. The safety device 10 is then inserted upwardly into the magazine well 12, with the top portion 34 extending upwardly beyond the magazine well 12 into the space between the front face 26 of the breech bolt 22 and the breech opening 20 of the chamber 18. In order for the magazine latch catch 96 to engage the latch detent 86, however, the plunger 48 must be urged upward beyond the position shown in solid line in FIG. 2 to the position shown in solid line in FIG. 1. The spring 78, however, ordinarily holds the plunger 48 extended from within the main body 28 until the main body 28 is fully inserted into the magazine well 12, placing the seat 66 in alignment with the breech opening 20. Further movement of the plunger 48 is still necessary at that point, however, in order for the latch detent 86 to engage the magazine latch catch 96. Because the cable 68 is connected with the plunger 48 by the connector lug 72, upward movement of the plunger 48 into the main body 28 causes the cable 68 to move through the connector slide channel 62, urging the tip 70 and the adjacent portion of the cable 68 to move forward from the seat 66 and extend beyond the forward face 64 of the main body 28 as a chamber probe. If there is anything located within the chamber 18, and particularly if there is a cartridge located within the chamber 18 in a position to be fired should the breech bolt 22 be closed, the tip 70 of the chamber probe portion of the cable 68 will be prevented from entering into the chamber 18, and, in turn, the plunger 48 will be prevented from being pushed into the cavity 46 far enough for the latch detent 86 to be held by the catch 96. As a result, unless the safety device 10 is continuously urged upwardly into the magazine well 12, the spring 78 will urge the plunger 48 outward with respect to the main body 28, retracting the cable 68 into the connector slide channel 62, leaving the front face 64 clear of any projections, and allowing the safety device 10 to fall from the magazine well 12.

Should the main body 28 be wedged or otherwise held within the magazine well 12, the position of the base 52 of the plunger 48, spaced apart from the magazine well 12, will provide a readily visible indication that the weapon may not be safe.

When the safety device 10 is held operatively within the magazine well 12 by the engagement of the magazine latch catch 96 and the latch detent 86, the flanges 54 and 56 abut closely against the bottom edges 98 and 100 of the left and right sides of the magazine well 12. Additionally, the front of the safety device 10 is then located closely adjacent to a front interior surface of the magazine well 12, the spline 30 fills the cartridge follower channel at the rear of the magazine well, and the rear of the safety device abuts against the rear interior surface of the magazine well 12, so that the safety device 10 effectively closes the magazine well 12 against entry of contaminants.

Furthermore, when the safety device 10 is in place the pad 32 is located against the bottom of a bolt stop latch lever 102 of the rifle 14. The bolt stop latch lever 102 is ordinarily raised to an operative position by a tab portion of the cartridge follower (not shown) of a magazine 27 upon rearward movement of the bolt 22 after ejection of the final cartridge which was originally located within a magazine 27. Once the latch lever 102 has been raised by the cartridge follower of a magazine, the bolt stop latch 24 remains in a raised position, preventing forward movement of the bolt 22 until it is manually released after a loaded magazine 27 has been inserted into the proper location within the magazine well 12.

Since the pad 32 of the safety device 10 is located at the position which would be taken by a portion of the cartridge follower of a magazine 27 upon ejection of the final cartridge, it holds the lever 102 up, preventing the bolt 22 from being released to move forward while the safety device 10 is latched within the magazine well 12. Nevertheless, should the bolt stop latch 24 or the lever 102 become broken, the rear face 38 of the top portion of the safety device 10 still prevents the bolt 22 from closing against the breech 20 of the barrel 16 and thus prevents the rifle 14 from discharging a cartridge, should such a cartridge be present in the chamber 18.

Some military rifles, such as the rifle 14, include an empty case ejection port cover which may be latched in an open position. Such an ejection port cover is typically attached to the right side of the rifle 14 by a hinge and is biased by a spring toward an open position, in which the ejection port cover closes the ejection port against entry of foreign material into the interior of the receiver of the rifle 14. It is usually difficult to determine visually, from any distance away from the rifle 14, whether the bolt 22 is closed or in a rearwardly-located open position, except by inspection with the ejection port cover open. Keeping the ejection port cover open, for the purpose of always being able to visually verify that the bolt is rearward, however, would permit precipitation or airborne foreign matter to contaminate the moving parts located within the receiver of the rifle 14. Thus, keeping the ejection port cover open increases the likelihood of the rifle 14 failing to operate properly at some later time.

As discussed previously, the safety device 10 cannot be fully inserted if the bolt 22 is closed when one attempts to insert the safety device 10. Since the magazine latch catch 96 engages the detent 86 only when the safety device 10 is fully inserted upwardly within the magazine well 12, with the plunger 48 pressed into the cavity 46 and the chamber probe tip 70 extended into the chamber 18 the safety device 10 will normally fall out of the magazine well 12. Therefore, the safety device 10 will either be absent or visibly protruding to an improperly greater extent if the rifle 14 is in a condition to be fired immediately.

On the other hand, if the safety device 10 is properly located within the magazine well 12 of the rifle 14, the flanges 54 and 56 will be adjacent the bottom edges 98 and 100 of the magazine well 12, clearly visible to a person on either side of the rifle 14. Since the safety device 10 can be inserted fully into the weapon only when the bolt 22 is fully rearwardly withdrawn to the

PR 0105

ET50283

open position as shown in FIGS. 8 and 2, the presence of the flanges 54 and 56 and closely along the bottom edges 98 and 100 verifies that the bolt 22 is fully rearwardly withdrawn, making it unnecessary for the ejection port cover to be kept open. Furthermore, the top portion 34 prevents a cartridge from being placed into the chamber 18 through the ejection port when the safety device 10 is in place.

Thus, the flanges 54 and 56 and the spline 30 close the bottom opening of the magazine well 12 to prevent entry of contaminating materials such as sand and the like, and the ejection port cover may be left closed to prevent entry of similar materials through the ejection port. Nevertheless, it is easy to verify visually, even from a considerable distance, that the rifle 14 has been made safe by the safety device 10 and cannot be fired unintentionally.

If it is desired, however, to fire the rifle 14 quickly, the safety device 10 can be quickly released from its location within the magazine well 12 by depressing the magazine latch release button 92 on the right side of the rifle 14. This permits the plunger 48 to extend from the main body 28, withdrawing the chamber probe 70 from the chamber 18. The safety device 10 is thus freed quickly to drop or be withdrawn from the magazine well 12, permitting a loaded magazine 27 to be inserted in the normal manner.

The main body 28 and the plunger 48 of the safety device 10 may be manufactured preferably of a durable high density plastics material with sufficient strength and thickness to prevent deformation which might permit dirt to enter the magazine well 12 around the safety device 10 and to prevent the bolt 22 from moving forward in case of failure of the bolt stop latch 24 to operate properly. The material should, preferably, be somewhat resilient in order to provide a snug sliding fit in the magazine well and avoid damage to the moving parts such as the bolt 22 which may come into contact with the safety device 10. Preferably, at least the base 52 of the plunger 48 of the safety device 10 has a bright, clearly visible color, such as international orange, which contrasts with the color of the rifle 14, in order to facilitate verification from a distance of at least several meters that the safety device 10 is properly located within a magazine well 12. The body portion 52 of the plunger 48 which is normally housed within the cavity of the main body 28 may be of a contrasting, easily visible color such as white, to be seen easily when the safety device 10 is located within the magazine well 12 but not fully seated and latched in position.

The terms and expressions which have been employed in the foregoing specification are used therein as terms of description and not of limitation, and there is no intention, in the use of such terms and expressions, of excluding equivalents of the features shown and described or portions thereof, it being recognized that the scope of the invention is defined and limited only by the claims which follow.

What is claimed is:

1. A safety device for use in a repeating firearm of the type having a chamber for holding a cartridge during firing, a bolt reciprocatingly movable between a closed position necessary for the firearm to be fired and an open position which prevents firing, and having a magazine well including an opening for receiving a magazine therein, the safety device comprising:

(a) a main body capable of fitting within said magazine well,

(b) movable chamber probe means associated with said main body for detecting the presence of an object in the chamber of said firearm; and

(c) movable indicator means, associated with said main body and connected with said chamber probe means, for providing a visible indication when said chamber probe means encounters an object in said chamber.

2. The safety device of claim 1, wherein said indicator means includes a plunger member disposed slidably in said main body and connected with said chamber probe means so as to cause said plunger member to extend outward from said main body beyond a predetermined position when said main body is located within said magazine well, unless said chamber probe means is fully extended into said chamber of said firearm.

3. The safety device of claim 2, further including elastic biasing means for urging said plunger member visibly outward from said main body, and detent means for engaging a magazine latch of said firearm to hold said main body in said magazine well and said plunger member in said main body when said probe means is extended into said chamber.

4. The safety device of claim 2, including resilient biasing means for urging said plunger toward an outwardly extended position with respect to said main body.

5. The safety device of claim 4, further including detent means for engaging said firearm and holding said safety device with said main body located in said magazine well and said plunger in an inwardly located position indicating a safe condition of said firearm when said probe is extended into said chamber.

6. The safety device of claim 5 wherein said firearm includes a magazine latch, said detent means includes a detent located on said plunger in position to cooperate with said magazine latch of said firearm, said main body defining a cavity and said plunger being slidably disposed at least partially therein, and said biasing means including a spring located within said cavity and disposed between said plunger and said main body, urging said main body into said magazine well when said detent is in latching engagement with said magazine latch of said firearm.

7. The safety device of claim 2 wherein said plunger includes a base portion which fits closely adjacent the opening of said magazine well, closingly covering said magazine well when said chamber probe is fully extended when said main body is located properly within said magazine well.

8. The safety device of claim 1 wherein said plunger includes a base portion attached thereto which fits closely adjacent the opening of said magazine well, closingly covering said magazine well when said chamber probe is fully extended when said main body is located properly within said magazine well.

9. The safety device of claim 1 including means for holding said chamber probe means retracted toward said main body far enough not to cause interference between said safety device and said firearm during insertion of said safety device into said magazine well.

10. The safety device of claim 9 wherein said means for holding said chamber probe means retracted includes a spring disposed within said main body and said indicator means, acting upon said main body and said indicator means, urging said indicator means toward a position in which said indicator means retracts said chamber probe means into said main body.

PR 0106

ET50284

11. The safety device of claim 9 including detent means associated with said indicator means, for engaging said firearm and holding said safety device in place within said magazine well when said chamber probe means is extended, and means interconnecting said chamber probe means with said indicator means, for preventing engagement of said detent means unless said chamber probe means is fully extended.

12. The safety device of claim 1 wherein said chamber probe means includes a metal cable connected with said movable indicator means, said cable including a first end which extends into said chamber when said chamber is unobstructed and said safety device is inserted properly into said magazine well.

13. The safety device of claim 12 including a tip member attached fixedly to said first end of said cable, said tip member having a diameter great enough to prevent said probe means from entering said chamber when a cartridge is located therein and to prevent said cable from being retracted into said main body beyond a predetermined location.

14. The safety device of claim 12 wherein said main body defines an arcuate passageway and said cable includes a second end connected with said indicator means, said cable extending through said arcuate passageway from said indicator means to said first end thereof

15. The safety device of claim 1 wherein said main body includes stop portion means for preventing said bolt from moving from the open position to the closed position when said main body is properly located within said magazine well, and for preventing said main body from being inserted fully into said magazine well when said bolt is in said closed position.

16. The safety device of claim 15 wherein said chamber probe means includes a metal cable connected with said movable indicator means, said cable including a first end which extends into said chamber when said chamber is unobstructed and said safety device is inserted properly into said magazine well.

17. The safety device of claim 16, including a tip member attached fixedly to said first end of said cable, said tip member having a diameter great enough to prevent said probe means from entering said chamber when a cartridge is located therein and to prevent said cable from being retracted into said main body beyond a predetermined location.

18. The safety device of claim 16 wherein said main body defines an arcuate passageway and said cable includes a second end connected with said indicator means, said cable extending through said arcuate passageway from said indicator means to said first end thereof.

19. The safety device of claim 1 including flexible connector means for connecting said movable chamber probe means with said indicator means

* * * * *

PR 0107

ET50285

United States Patent [19]

Marzocco

[11] Patent Number: 5,068,990

[45] Date of Patent: Dec. 3, 1991

[54] TRIGGER MECHANISM FOR SMOOTH-BORE FIREARMS

[75] Inventor: Alessandro Marzocco, Milan, Italy

[73] Assignee: Luigi Franchi S.p.A., Italy

[21] Appl. No.: 602,828

[22] Filed: Oct. 24, 1990

[30] Foreign Application Priority Data

Oct. 27, 1989 [IT] Italy 22182 A/89

[51] Int. Cl.[5] F41A 17/56

[52] U.S. Cl. 42/70.04

[58] Field of Search 42/70.04, 70.05

[56] References Cited

U.S. PATENT DOCUMENTS

1,044,568	11/1912	Pedersen	42/70.04
2,233,504	3/1941	Young	42/70.04
2,296,447	3/1960	Scripter	42/70.05
2,856,718	10/1958	Fischer	42/70.05
3,949,508	4/1976	Elkas	42/70.05
4,719,841	1/1988	Perrine	42/70.04

Primary Examiner—Richard W. Wendtland

Attorney, Agent, or Firm—Diller, Ramik & Wight

[57] ABSTRACT

A safety device to prevent accidental firing acting on the engagement lever of the hammer in a trigger mechanism for smooth-bore firearms.

7 Claims, 3 Drawing Sheets

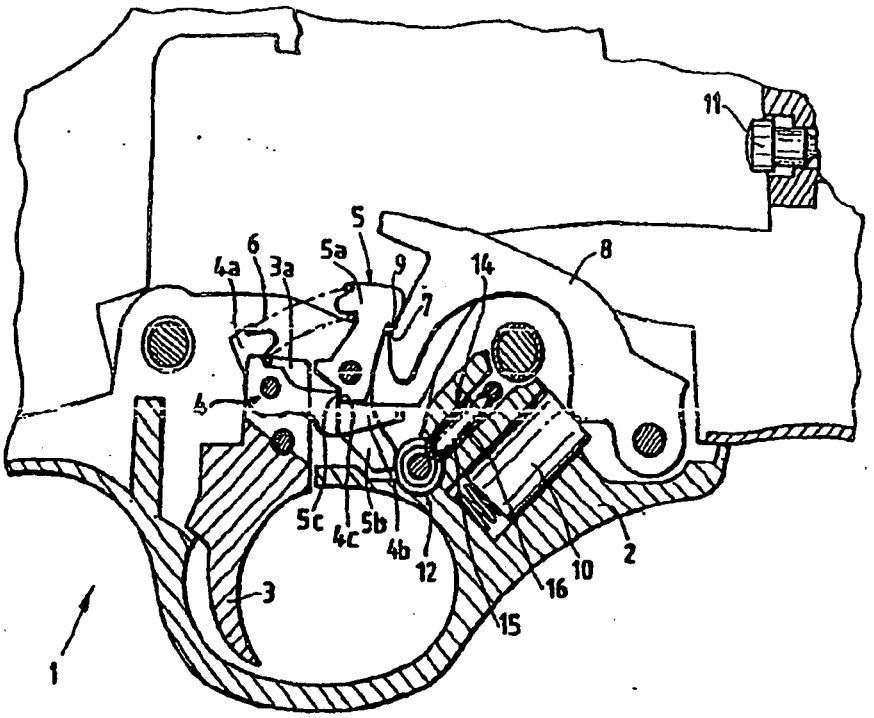

PR 0109

ET50287

Fig.1

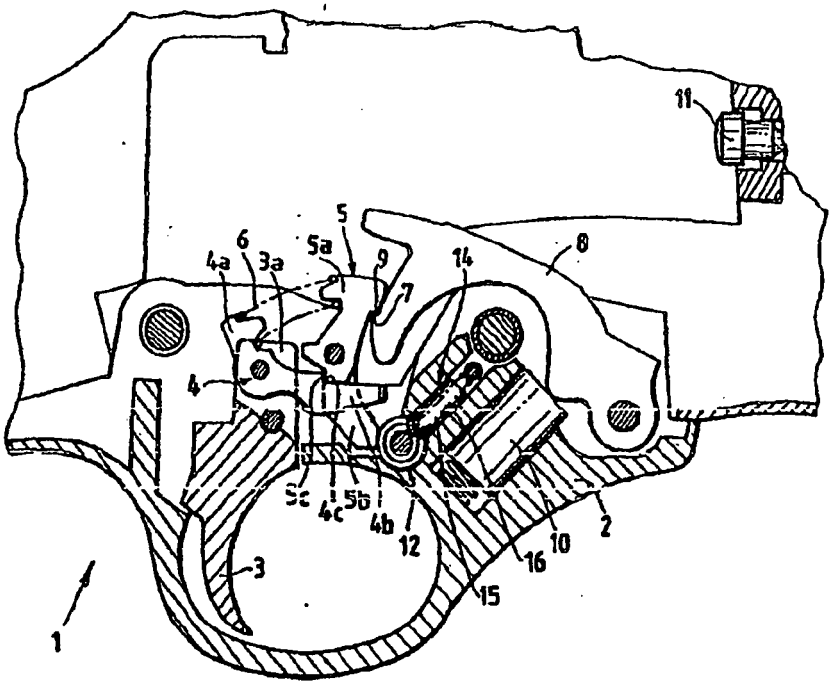

PR 0110

ET50288

ROTATING SAFETY MECHANISM FOR PROJECTILE WEAPONS

This is a continuation of application Ser. No. 790,385, filed 10/23/85, abandoned.

BACKGROUND OF THE INVENTION

1. Field of the Invention

The present invention relates generally to a safety mechanism for projectile weapons and in particular to a device for preventing the movement of the trigger and/or hammer of a projectile weapon to a position which could result in a discharge of a loaded weapon.

2. Description of the Prior Art

Each year many persons are killed by the unintentional or accidental discharge of projectile weapons. Projectile weapons include firearms and any device capable of propelling an object through the air such as a power nail driver or staple gun. Thus, there is a need for a device which will prevent the movement of a trigger and/or hammer to a position in which the weapon can be discharged. However, such a device must be easy to install and use in order to encourage the use of such a safety mechanism with all projectile weapons.

Many types of safety devices for firearms are known. One group of such devices involves a pin or slide which is moved into and out of engagement with the hammer such as shown in U.S. Pat. Nos. 289,875; 311,323; 792,381; and 1,227,531. Another type of safety mechanism involves a pin or lever which prevents the actuation of the trigger mechanism such as shown in U.S. Pat. Nos. 80,043; 132,222; 206,217; 239,652; 2,379,946; 2,458,616; 2,657,490; 3,153,874; 3,222,809; 3,711,979; 3,713,239; 3,713,242; 3,732,641; 3,861,069; 3,964,200; and 4,050,662. In the alternative, there is a class of devices which blocks the insertion of a finger in front of the trigger to prevent the actuation of the trigger such as shown in U.S. Pat. Nos. 1,079,855; 1,563,250; 1,569,553; 2,195,693; 2,525,886; 2,590,516; 2,664,658; 3,422,560; 3,956,842; 4,084,341; 4,198,026; 4,299,045; and 4,395,837.

All of the above mentioned prior art devices have disadvantages such as being complicated in structure and requiring substantial modifications to the firearms. With respect to those devices which utilize removable pins, the pins are easily lost rendering the safety mechanism inoperable.

SUMMARY OF THE INVENTION

The present invention is concerned with a safety mechanism for projectile weapons which is easy to install and operate and does not include a removable part which can be lost rendering the safety mechanism inoperative. A stop means in the form of a pin having a cross-section in the shape of a single lobe cam is rotatably mounted in the weapon such that the cam is in contact with a portion of either the trigger or the hammer to prevent actuation of such element and render the weapon inoperative. One end of the pin is in contact with a biasing spring which tends to bias the pin into the safety "on" position as described above. The other end of the pin is external to the firearm and has a knurled surface for a higher coefficient of friction with an actuating finger. When pressure is applied to the external end of the pin, the pin is shifted toward the interior of the firearm against the biasing spring to move a key portion of the pin from a slot. This shifting allows the pin to be rotated approximately twenty degrees to move the cam out of engagement with the trigger or the hammer thereby releasing the safety. Rotation of the pin in the opposite direction aligns the key portion with the slot and the biasing spring moves the pin back into the safety "on" position. The simultaneous pushing and rotation movement makes the safety mechanism extremely difficult for a child to operate.

It is an object of the present invention to provide a safety mechanism for a projectile weapon which can be easily operated by either a right-handed person or a left-handed person.

It is another object of the present invention to provide a safety mechanism for a firearm which is economical to manufacture and install on projectile weapons.

It is a further object of the invention to provide a safety mechanism for projectile weapons which is child resistant.

DETAILED DESCRIPTION OF THE DRAWINGS

FIG. 1 is a schematic representation of a trigger and a safety mechanism according to the present invention for preventing the actuation of the trigger;

FIG. 2 is a fragmentary front elevational view of an exterior surface of a firearm and the hand engaging portion of a safety mechanism according to the present invention;

FIG. 3 is a fragmentary cross-sectional plan view taken through a portion of a firearm and showing the rotating safety mechanism according to the present invention;

FIG. 4 is a fragmentary cross-sectional view taken along the line 4—4 of FIG. 3;

FIG. 5 is a fragmentary cross-sectional view taken along the line 5—5 of FIG. 3; and

FIG. 6 is a fragmentary cross-sectional view taken along the line 6—6 of FIG. 3.

DESCRIPTION OF THE PREFERRED EMBODIMENT

There is shown in FIG. 1 a schematic representation of a trigger 10 and a rotating safety mechanism 11 according to the present invention. The trigger 10 is mounted for rotation about a pivot point 12 in the direction of the arrow 13 for actuating the firing mechanism of a projectile weapon. A safety engaging portion 14 of the trigger 10 extends from the body of the trigger and will also rotate in the direction of the arrow 13 as the trigger is actuated. The safety mechanism 11 has a stop means in the form of a generally cylindrical body 15 mounted for rotation about its longitudinal axis 16 in the direction of the arrow 17. A cam lobe 18 is formed on an exterior surface of the body 15 and, in the safety "on" position, engages the portion 14 of the trigger 10 preventing movement of the trigger in the direction of the arrow 13.

There is shown in FIGS. 2 through 6 a safety mechanism according to the present invention installed in a projectile weapon. The weapon 20 has an exterior surface 21. Extending from the exterior surface 21 through an aperture 22 is one end 23 of a pin 24 which is one element of a rotating safety mechanism according to the present invention. The end 23 has a knurled surface for increasing the coefficient of friction between it and a finger of a human finger. As shown in FIG. 3, the pin 24 has a generally cylindrical body 25 which is rotatably

PR 0111

ET50289

ported in a generally cylindrical cavity 27 formed in the body of the firearm 20. An end 26 of the cylindrical body 25 opposite the end 23 abuts one end of a helical spring 28 having its other end abutting a wall 29 of the cylindrical cavity 27. The spring 28 functions as a biasing means which tends to bias the pin 24 into the position shown in FIG. 3 which is the safety "on" position.

As shown in FIGS. 3 and 4, the cylindrical body 25 has a radially extending key 31 formed thereon. Although the key 31 has been shown in the general shape of a cam lobe, it could be of any suitable shape. The key 31 is retained in a similarly shaped slot 32 formed in the body of the weapon 20. The slot 32 is dimensioned to effectively prevent rotation of the cylindrical body 25 about its longitudinal axis 33. Thus, the key 31 and the slot 32 function as a locking or latching means.

Referring to FIGS. 3 and 5, the pin 24 is shifted in the direction of the arrow 36 by applying pressure to the end 23 to compress the spring 28 between the end 26 and the wall 29. The pin 24 will move in the direction of the arrow 36 until the key 31 engages a back wall 37 of a cavity 38 adjacent the slot 32. Referring to FIG. 5, the cavity 38 is substantially larger than the slot 32 and permits rotation of the cylindrical body 25 about the longitudinal axis 33 in the direction of the arrow 35 such that the key 31 rotates to the position shown by the phantom lines. This position of the pin is the safety "off" position and is achieved by the pushing or applying of pressure to the end 23 followed by the rotating of the cylindrical body 25. This movement is typically achieved with the end of a single finger and is extremely difficult for a child to accomplish.

As shown in FIGS. 3 and 6, the cylindrical body 25 has a radially extending cam lobe 39 formed thereon. The cam lobe 39 is the equivalent of the cam lobe 18 in FIG. 1 and is adapted to engage a portion of a trigger mechanism (not shown) in a manner similar to that shown in FIG. 1. When the cylindrical body 25 is rotated in the direction of the arrow 35, the cam lobe 39 is moved to the position shown in the phantom lines and out of engagement with the trigger mechanism. The degree of rotation of the cylindrical body 25 can be limited by the dimensions of the cavity 38 and of the key 31 which will tend to engage opposite walls of the cavity in the safety "on" and safety "off" positions. Also, the degree of rotation of the cylindrical body 25 could be limited by the dimensions of the cam lobe 39 and the spacing of the walls of a cavity 40 in which the cam lobe 39 rotates. In either case, the rotation typically can be limited to about twenty degrees.

In order to move the safety mechanism from the safety "off" position to the safety "on" position, the cylindrical body 25 is rotated by a finger in a direction opposite to the arrow 35 to align the key 31 with the slot 32. When the pressure is released from the end 23 of the body 25, the spring 28 will urge the cylindrical body 25 in the direction opposite the arrow 36 to restore the pin to the position shown in FIG. 3 in which the safety is "on".

The shapes and structures shown in the drawings are illustrative of one form of the present invention. The spring, key, slots, cam lobe, and directions of movement can all be varied without departing from the requirement of applied pressure to unlock the safety mechanism and rotation to move the mechanism between the safety "on" and safety "off" positions.

In accordance with the provisions of the patent statutes, the principle and mode of operation of the invention have been explained in its preferred embodiment. However, it must be understood that the invention may be practiced otherwise than as specifically illustrated and described without departing from its spirit or scope.

What is claimed is:

1. A safety mechanism for a projectile weapon, the weapon including an element pivotally mounted for movement between a position wherein the weapon can not be fired and an actuated position wherein the weapon is capable of being discharged, comprising:

a pin having a generally cylindrical body adapted to be retained in a generally cylindrical cavity;

a generally cylindrical first cavity formed in a projectile weapon for slidably and rotatably retaining said pin;

biasing means connected between an end of said pin and a wall of said first cavity for biasing said pin along a path of travel generally parallel to a longitudinal axis of said pin to a safety "on" first position, said pin being movable along said path of travel from said first position to a second position against the bias of said biasing means;

a cam lobe extending radially from said pin cylindrical body into a second cavity formed in a wall of said first cavity and into engagement with an element of the weapon in said first and second positions of said pin; and

latching means including a key formed on said pin for engaging a slot formed in a wall of said first cavity for preventing rotation of said pin about its longitudinal axis when said pin is in said first position and a third cavity formed in a wall of said first cavity adjacent said slot for receiving said key and for permitting rotation of said pin about its longitudinal axis when said pin is in said second position to move said cam lobe out of engagement with the element to a safety "off" position wherein the element can be moved to an actuated position.

2. The safety mechanism according to claim 1 wherein said biasing means is a helical spring having one end abutting a wall of said first cavity and an opposite end engaging said pin.

3. The safety mechanism according to claim 1 wherein said pin has one end extending through a wall of the projectile weapon, said one end having a knurl formed thereon for enabling said pin to be rotated by a human finger.

4. The safety mechanism according to claim 1 wherein said key extends radially from said pin cylindrical body.

5. The safety mechanism according to claim 1 wherein the element is a trigger pivotally mounted on the weapon.

6. The safety mechanism according to claim 1 wherein the element is a hammer pivotally mounted on the weapon.

* * * * *

PR 0112

ET50290

United States Patent [19]

Brandt

[11] Patent Number: 4,754,568

[45] Date of Patent: Jul. 5, 1988

[54] ROTATING SAFETY MECHANISM FOR PROJECTILE WEAPONS

[76] Inventor: Raymond W. Brandt, 11220 St. Joe Rd., Fort Wayne, Ind. 46815

[21] Appl. No.: 107,882

[22] Filed: Oct. 9, 1987

Related U.S. Application Data

[63] Continuation of Ser. No. 790,185, Oct. 23, 1985, abandoned.

[51] Int. Cl.[4] F41C 17/02

[52] U.S. Cl. 42/70.06; 42/70.01

[58] Field of Search 42/70.01, 70.03, 70.04, 42/70.05, 70.06, 70.07, 70.08

[56] References Cited

U.S. PATENT DOCUMENTS

1,227,531	5/1917	Donadio	42/70.08
2,225,583	12/1940	Blizard	42/70.06
2,458,616	1/1949	Maynor	42/70.06
4,445,292	5/1984	Martin	42/70.01 X

Primary Examiner—Ted L. Parr

Attorney, Agent, or Firm—Marshall & Melhorn

[57] ABSTRACT

A safety mechanism for projectile weapons includes a stop means mounted to prevent the movement of the trigger and/or hammer to a position enabling the weapon to be fired. The stop means includes a generally cylindrical pin having one end extending through a wall of the weapon and the internal body under spring pressure biasing the pin to a first safety "on" position. A cam lobe is formed on the body of the internal portion and engages a portion of the trigger and/or hammer to prevent movement of the trigger and/or hammer from the disabled position. A radially extending key formed on the pin engages a slot in the wall of the weapon to prevent the pin from being rotated about its longitudinal axis. In order to disengage the safety, pressure is applied to the pin to move it to a second position along a path parallel to the longitudinal axis of the pin whereby the key is moved out of the slot to permit rotation of the pin about its longitudinal axis. Such rotation moves the cam lobe out of engagement with the trigger and/or hammer to permit the trigger and/or hammer to be actuated to fire the weapon.

6 Claims, 1 Drawing Sheet

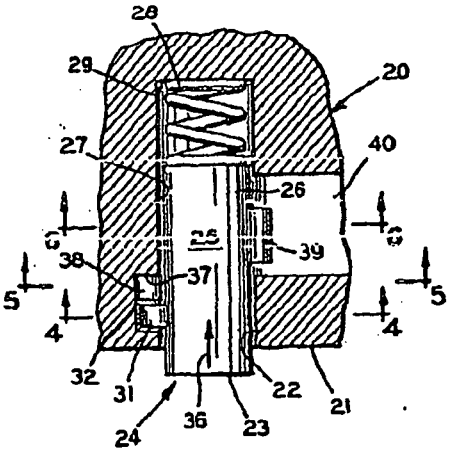

PR 0114

ET50292

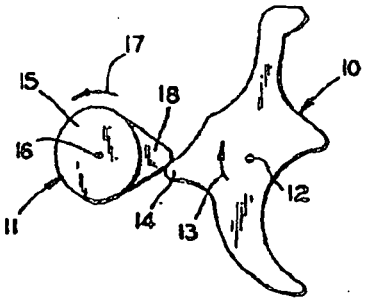

FIG. 1

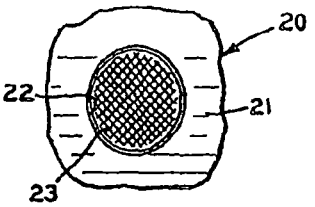

FIG. 2

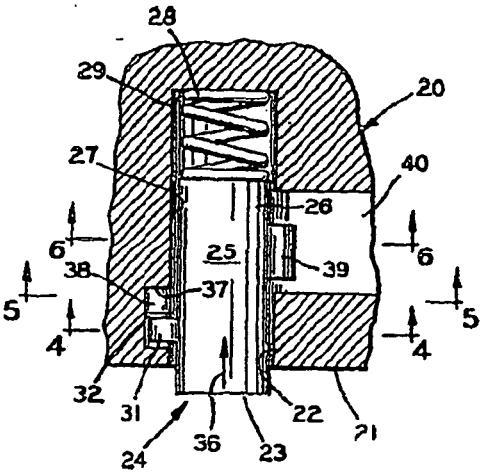

FIG. 3

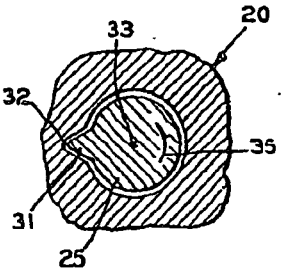

FIG. 4

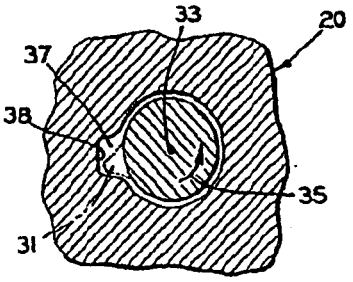

FIG. 5

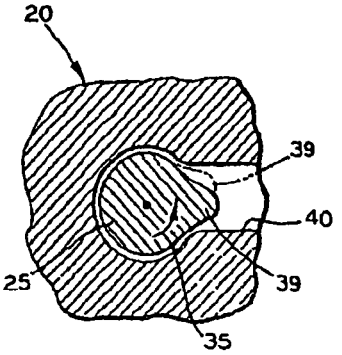

FIG. 6

PR 0115

ET50293

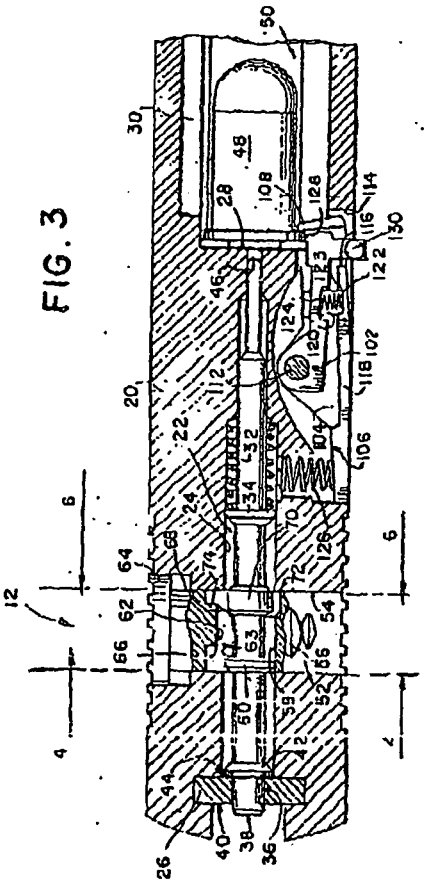

FIG. 3

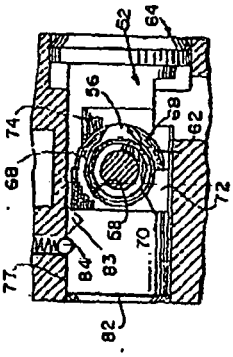

FIG. 6

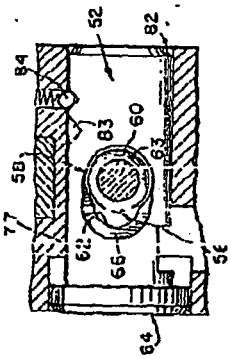

FIG. 4

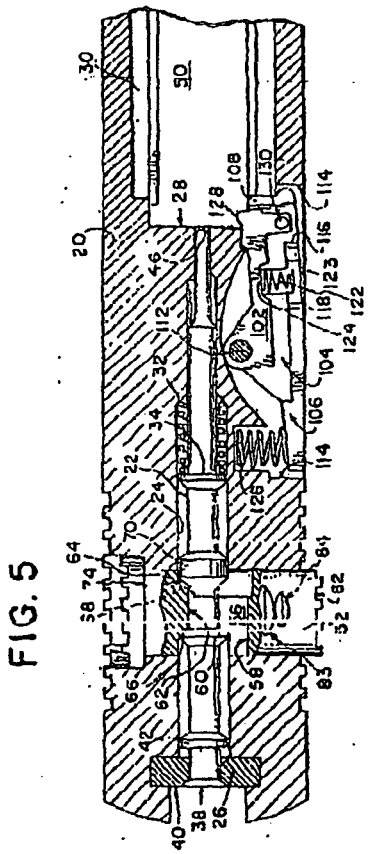

FIG. 5

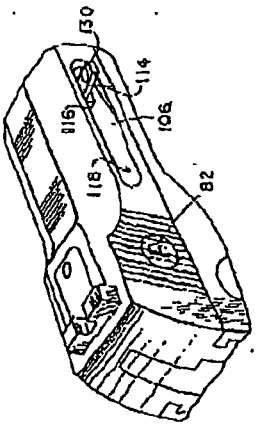

FIG. 7

PR 0117

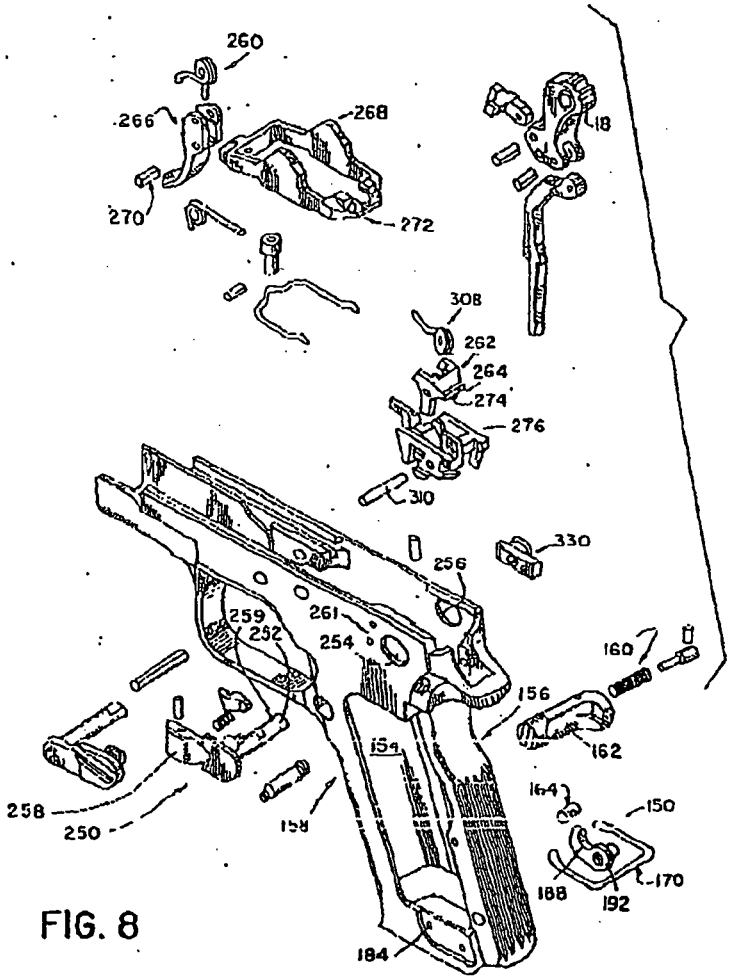

FIG. 8

PR 0118

ET50296

FIG. 9

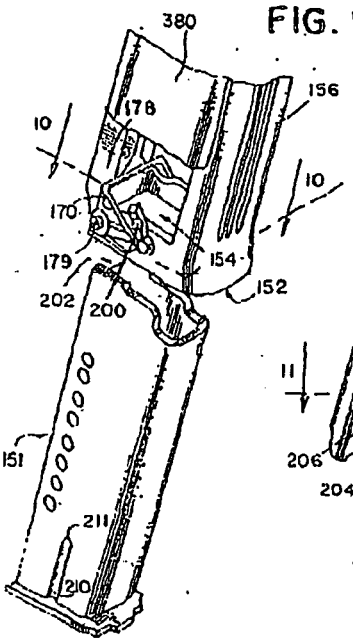

FIG. 11

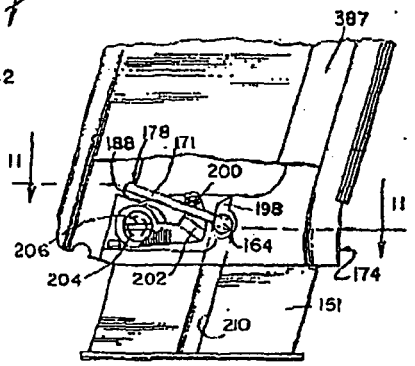

FIG. 10

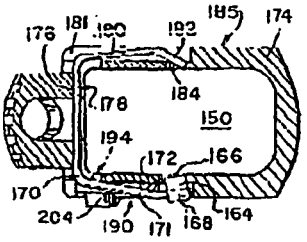

FIG. 12

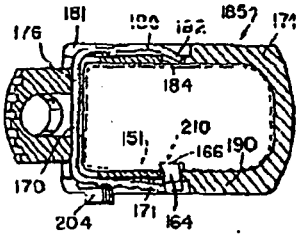

PR 0119

ET50297

FIG. 13

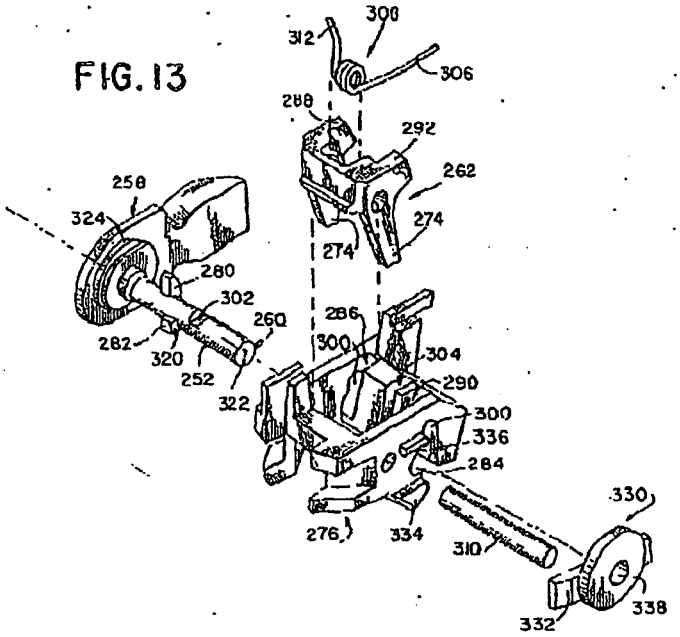

FIG. 14

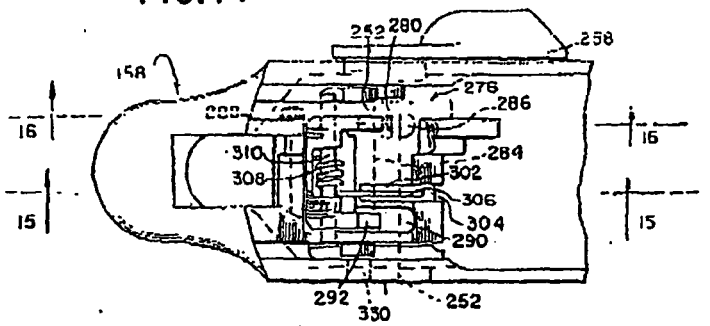

PR 0120

ET50298

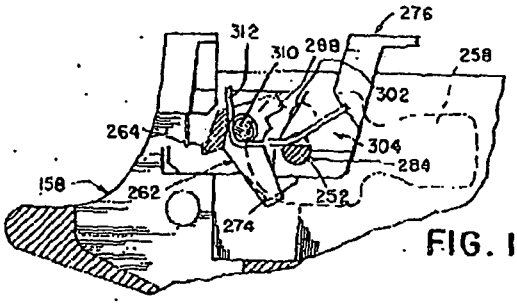

FIG. 15

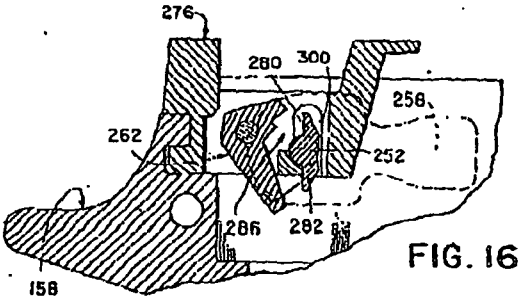

FIG. 16

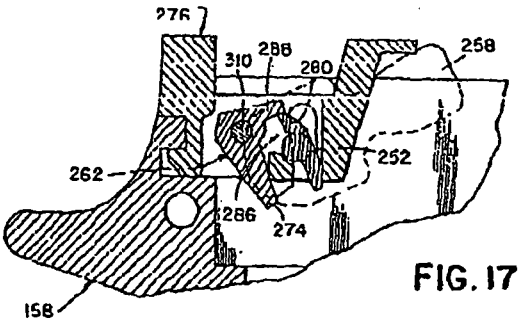

FIG. 17

PR 0121

ET50299

FIG. 18

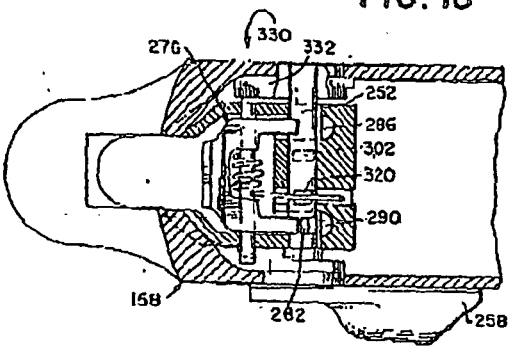

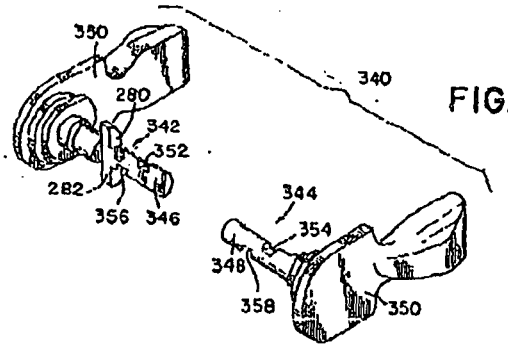

FIG. 19

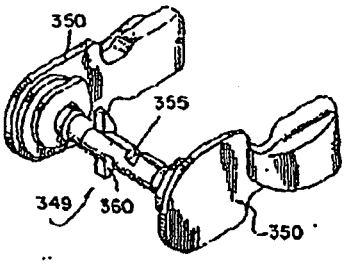

FIG. 20

PR 0122

ET50300

FIREARM SAFETY DEVICES

BACKGROUND OF THE INVENTION

1. Field of the Invention

The present invention relates to firearms, and more particularly, to devices for facilitating the safe handling of firearms.

2. Description of the Prior Art

Automatic and semiautomatic firearms or guns such as magazine loaded rifles and handguns typically have a firing pin which when struck by the hammer of the firearm is driven forward striking and discharging the cartridge held within the firing chamber of the firearm. Several devices have been proposed to selectively block the firing pin to prevent the firearm from being accidentally fired. For example, in a semiautomatic handgun, these devices (often referred to as "firing pin blocks") are typically mounted within the frame of the gun and have mechanical linkages to the firing pin itself which is usually carried in the slide of the gun. These previous firing pin blocks have tended to be relatively complicated and, because of their location adjacent the handgrip of the frame, are susceptible to being accidentally disengaged by the shooter. Moreover, many such firing pin block devices do not constantly block the firing pin when activated, but instead cooperate with other mechanisms such as the hammer actuator mechanism to only block the firing pin in certain hammer positions.

Other safety devices include loaded chamber indicators which indicate to the shooter whether a cartridge is seated in the firing chamber in position for firing. Many previous loaded chamber indicators have included a spring-loaded pin which has one end positioned relative to the firing chamber such that a cartridge loaded in the chamber engages and pushes the indicator pin outward. This outward movement of the pin usually causes a portion of the pin to protrude beyond the exterior of the gun providing an indication that a cartridge is loaded in the chamber. These pins are often relatively small in diameter and can be susceptible to breakage. Moreover, dirt lodged against the pin can immobilize the pin causing the gun to jam.

Still another safety device is the thumb safety so called because it is typically actuated by the shooter's thumb. The thumb safety usually locks the gun so that the hammer is prevented from falling even though the trigger is pulled. To activate the safety, most thumb safeties have an exterior lever on the left-hand side of the gun positioned adjacent the thumb of a right-handed user. Pivoting the lever causes the safety to engage and "lock" the hammer actuator.

To accommodate left-handed users, some thumb safeties allow a second lever to be placed on the right-hand side of the gun to form an "ambidextrous" thumb safety. This second lever is often attached to a shaft extending transversely through the gun. One problem experienced with ambidextrous thumb safeties of this type is that the second thumb lever can sometimes work loose from the shaft of the safety so that positive engagement of the safety is not always assured.

Many left-handed shooters prefer to have only the single thumb safety lever on the right-hand side of the gun so that the lever on the left-hand side of the gun is eliminated. However, many guns require such a thumb safety for "lefties" to be custom crafted by a skilled gunsmith.

Other devices for safe handling of firearms relate to the loading and unloading of ammunition. In one type of gun, the cartridges to be fired by the gun are carried in a removable magazine which is inserted into a portion of the frame of the gun often referred to as the "magazine well." In many magazine-type guns, the magazine falls freely from the magazine well under the influence of gravity once released. The released magazine will fall to the ground unless caught by the shooter placing his hand beneath the gun. This is a desirable feature under certain circumstances but requires additional care on the part of the shooter. Other magazine-type guns have a catch mechanism which only allows the magazine to partially drop from the magazine well once released. The shooter may then manually withdraw the magazine the rest of the way from the well. However, it is not believed that there is presently available a magazine-type gun in which the user may select between allowing the magazine to drop freely and allowing the magazine to only partially drop from the well to prevent complete release of the magazine.

SUMMARY OF THE INVENTION

It is an object of the present invention to provide a gun or firearm having safety devices obviating for practical purposes, the above-mentioned limitations.

It is a further object of the present invention to provide a firing pin block which is located on the firearm in such a position so as to minimize accidental release of the firing pin block.

It is another object of the present invention to provide a relatively simple yet effective firing pin block.

It is a further object of the present invention to provide a firing pin block which is independent of the trigger mechanism of the gun.

It is another object of the present invention to provide a loaded chamber indicator which is less susceptible to breakage and to jamming the gun.

It is still another object of the present invention to provide a more reliable ambidextrous thumb safety which is easily disassembled from the gun.

It is a further object of the present invention to provide a reversible thumb safety which is easily installed on either side of the gun without the aid of a gunsmith.

In one aspect of the present invention, a firing pin block is provided which pulls the firing pin towards the muzzle and below the hammer striking surface of the gun to prevent the hammer from being able to reach the firing pin. In the illustrated embodiment, the firing pin block includes a bolt mounted transversally through the slide and adapted to engage and disengage the firing pin as the bolt is moved between "safety" and "fire" positions, respectively.

In another aspect of the present invention, a loaded chamber indicator includes a lever pivoted at one end to the firearm with the free end of the lever positioned adjacent the opening of the firing chamber. A cartridge loaded in the chamber causes the indicator lever to pivot outward providing an indication of the chamber being loaded.

In still another aspect of the present invention, an ambidextrous thumb safety includes a shaft comprising two shaft portions. Each shaft portion has an integral thumb lever at one end and is shaped substantially as a half cylinder at the other end. The two shaft portions are adapted to mate together to form a single shaft.

In an additional aspect of the present invention, a fully reversible thumb safety is provided. In the illus-

PR 0123

ET50301

trated embodiment, the thumb safety has a shaft and an integral thumb lever wherein the shaft is readily insertable into either side of the firearm. The shaft has projecting members on either side of the shaft to allow the thumb safety to engage the hammer actuator mechanism regardless of which side of the firearm the thumb safety is installed.

In a further aspect of the present invention, a selective magazine catch is provided in which the magazine may either fall freely or catch in the magazine well after falling a predetermined distance, as desired by the shooter.

BRIEF DESCRIPTION OF THE DRAWINGS

FIG. 1 is a side view of a semiautomatic handgun in accordance with a preferred embodiment of the present invention;

FIG. 2 is an exploded perspective view of the slide assembly of the handgun of FIG. 1 illustrating a loaded chamber indicator and a firing pin block in accordance with a preferred embodiment of the present invention;

FIG. 3 is an assembled cross-sectional view of the slide assembly of FIG. 2 showing the firing pin block in the fire position and the loaded chamber indicator with a cartridge loaded into the chamber;

FIG. 4 is a front view of the bolt of the firing pin block viewed along the line 4—4 of FIG. 3;

FIG. 5 is an assembled cross-sectional view of the slide assembly of FIG. 1 showing the fire pin block in the safety position and the loaded chamber indicator without a cartridge in the chamber;

FIG. 6 is a rear view of the bolt of FIG. 2 viewed along the line 6—6 of FIG. 3;

FIG. 7 is a partial perspective view of the assembled loaded chamber indicator of FIG. 2;

FIG. 8 is an exploded perspective view of the frame of the handgun of FIG. 1 illustrating a reversible thumb safety and selective magazine catch in accordance with a preferred embodiment of the present invention;

FIG. 9 is a perspective view of the selective magazine catch of FIG. 8;

FIG. 10 is a cross-sectional view of the selective magazine catch of FIG. 9 viewed along the line 10—10;

FIG. 11 is a side view of the selected magazine catch of FIG. 9 in the catch position showing a magazine partially dropped out;

FIG. 12 is a cross-sectional view of the selective magazine catch of FIG. 11 viewed along the line 11—11;

FIG. 13 is an exploded perspective view of the reversible thumb safety of FIG. 8;

FIG. 14 is a top view of the assembled frame of FIG. 8 showing the safety in the fire position with the lever on the left side of the gun;

FIG. 15 is a cross-sectional view of the safety of FIG. 14 viewed along the line 15—15;

FIG. 16 is a cross-sectional view of the safety of FIG. 14 viewed along the line 16—16;

FIG. 17 is a cross-sectional view of the safety of FIG. 14 showing the safety in the safety position;

FIG. 18 is a top view of the assembled frame of FIG. 8 showing the safety in the fire position with the lever on the right side of the frame;

FIG. 19 is an exploded perspective view of an ambidextrous thumb safety lever in accordance with a preferred embodiment of the present invention; and

FIG. 20 is a perspective view of the assembled ambidextrous thumb safety lever of FIG. 19.

DETAILED DESCRIPTION OF THE DRAWINGS

FIG. 1 shows a semiautomatic handgun 10 (hereinafter "gun 10") which incorporates the safety features of the present invention. Although the illustrated embodiments of the present invention are described in connection with such a handgun, it is recognized that these safety features may also be utilized in other types of firearms.

The gun 10 has in accordance with one aspect of the present invention, a firing pin block mechanism 12 which may be seen more clearly in FIG. 2 which is an exploded view of the slide assembly 14 of the gun 10. In a manner well understood in the art, the slide assembly 14 moves sharply rearward (as indicated by the arrow 16) after a shot has been fired, to eject the spent cartridge and recock the hammer 18 (FIG. 1). Housed within the slide body 20 of the slide assembly 14 is the firing pin 22 as shown in FIG. 3. The firing pin 22 is carried in a generally cylindrical bore 24 which longitudinally extends from a firing pin retainer plate 26 to the breech face 28 adjacent the end of the barrel 30.

A spring 32 engaging a collar 34 of the firing pin 22 urges the firing pin rearward towards the retainer plate 26. The retainer plate 26 has an aperture 36 which allows the end 38 of the firing pin 22 to protrude beyond the hammer striking surface 40 of the retainer plate 26 until a collar 42 of the firing pin 22 engages the other side 44 of the retainer plate 26. The hammer 18 when released, is driven forward by a spring (not shown) causing the hammer 18 to strike the end 38 of the firing pin 22. This in turn drives the firing pin 22 forward causing the other end 46 of the firing pin to strike the primer of the cartridge 48 loaded within the chamber 50 of the gun 10.

In accordance with the present invention, the firing pin block 12 when engaged, pulls the end 38 of the firing pin 22 below the hammer striking surface 40 of the retainer plate 26 so that the hammer 18 cannot reach the end 38 of the firing pin 22. In addition, as will be more fully described below, the firing pin block 12 also blocks the firing pin 22 from reaching the cartridge 48.

Referring to both FIGS. 2 and 3, the firing pin block 12 includes a bolt 52 which is carried in a generally cylindrical bore 54 extending transversely across the slide body 20 and intersecting the firing pin bore 24. The bolt 52 has a noncircular opening 56 through which the firing pin 22 moves to strike the cartridge 48 if the bolt 52 is in the position illustrated in FIG. 3 and hereinafter referred to as the "fire" position.

The noncircular opening 56 of the bolt 52 may be seen more clearly in FIG. 4 which shows a front view of the bolt 52. As shown therein, the opening 56 is generally "keyhole" in shape and includes a first opening 58 which has an inner diameter exceeding that of a collar 60 (FIG. 3) on the firing pin 22. When the bolt 52 is in the fire position as illustrated in FIG. 3, the opening 58 of the bolt 52 is centered relative to the center axis of the firing pin 22 so that the collar 60 of the firing pin 22 can freely travel through the bolt 52 to strike the cartridge 48.

However, overlapping the opening 58 is a second smaller opening 62 of the bolt. The diameter of the opening 62 is slightly larger than the main shaft 63 of the firing pin 22 but is significantly smaller than the outer diameter of the pin collar 60. When the head 64 of the bolt 52 is pressed inward to the position illustrated in

PR 0124

ET50302

FIG. 5 (hereinafter referred to as the "safety" position), the opening 62 is centered with respect to the center axis of the firing pin 22 so that the collar 60 of the firing pin 22 is prevented from passing through the opening 56 of the bolt 52. The constricted opening 62 has a flat ledge 66 at its periphery to securely seat the collar 60 if the firing pin 22 should move toward the cartridge to effectively block the pin 22.

In addition, the bolt 52 has a camming surface 68 on its rear side adjacent the opening 56, which engages another collar 70 of the firing pin 22 as the bolt 52 is pushed to the safety position of FIG. 5. As best seen in FIG. 6, the camming surface 68 rises from a lower shelf 72 at the periphery of the larger opening 58 to an upper shelf 74 at the periphery of the smaller opening 62. The camming surface 68 is generally cylindrical in shape and is formed by boring the bolt 52 at an angle relative to the central axes of the openings 58 and 62.

Because the upper shelf 74 is closer (FIG. 5) to the muzzle than the lower shelf 72, engagement of the firing pin collar 70 by the camming surface 68 as the bolt 52 is pushed towards the safety position of FIG. 5, pushes the firing pin 22 towards the muzzle and away from the hammer. The displacement between the lower shelf 72 and upper shelf 74 is sufficiently large to move the end 38 of the firing pin 22 completely below the hammer striking surface 40 of the retainer plate 26. Consequently, the hammer cannot reach the firing pin when the bolt 52 is fully in the safety position illustrated in FIG. 5. Furthermore, the ledge 66 (FIG. 4) on the front of the bolt 52 prevents the firing pin 22 from being able to reach the primer of the cartridge within the gun chamber as previously described.

To releasably hold the bolt 52 in the respective fire and safety positions, the bolt 52 has a pair of indentations 83 and 84 on its upper surface 77 and positioned to engage a detent 78 (FIG. 2) biased downward from the top of the slide body 20 by a spring 80. The detent 78 engages the indentation 84 (FIG. 4) when the firing pin block bolt 52 is in the fire position. Depressing the head 64 of the bolt 52 causes the detent 78 to ride up out of the indentation 84 and fall into the other indentation 83 when the bolt 52 is pressed into the safety position. Pressing the opposite head 62 of the bolt 52 returns the bolt to the fire position. The bolt heads 64 and 82 may be marked with suitable indices such as "S" and "F", respectively.

It is seen from the above that the firing pin block 12 provides a simple yet effective mechanism for preventing accidental discharge of the firearm. The firing pin block 12 is independent of all other trigger and safety mechanisms and accordingly is always in action when actuated. Furthermore, because the firing pin block is located completely in the slide assembly 14 and away from the hand grip 156 (FIG. 1), the likelihood of accidental disengagement of the firing pin block is correspondingly reduced.

FIG. 2 also shows a loaded chamber indicator 100 in accordance with a preferred embodiment of the present invention. The loaded chamber indicator 100, as its name suggests, indicates to the shooter whether a cartridge is loaded in the firing chamber of the pistol when the slide assembly 14 is in the fully forward position illustrated in FIG. 1.

In accordance with the present invention, the loaded chamber indicator 100 includes an indicator lever 102 which is pivotally coupled to the slide body 20 of the slide assembly 14. When assembled, the lever 102 is carried in a flat depression 104 of the cartridge extractor lever 106. The extractor lever 106 and indicator lever 102 pivot around a common pivot pin 112 within an extractor slot 114 (FIG. 7). As best seen in FIGS. 3 and 7, the extractor slot is provided on the right side of the slide body 20 and extends rearward from the breech face 28.

The extractor lever 106 has a small hooked portion 108 which engages the base (FIG. 3) of the cartridge loaded in the firing chamber. As the slide assembly 14 retracts after the cartridge has been fired, the extractor lever 106 hooked to the base of the cartridge pulls the expended casing from the firing chamber, to be ejected out through ejection port 110 (FIG. 2) of the slide body 20.

In the illustrated embodiment, the extractor lever 106 has an aperture 116 in the exterior face portion 118, which communicates with the flat depression 104. The extractor lever 106 further has a cylindrical depression 120 which carries a spring 122 biasing the indicator lever 102 in a counterclockwise direction as viewed in FIG. 3. One end of the spring 122 seats in a notch 124 of the indicator lever 102 and the other end seats within a depression 125 on the inner side of the exterior face portion 118 of the extractor lever 106. A second spring 126 also biases the extractor lever 106 in a counterclockwise direction.

When a cartridge is loaded in the firing chamber 50, the exterior of the cartridge casing engages an engagement surface 128 on the inner side of the indicator lever 102, thereby pushing the indicator lever 102 outward in a clockwise direction to the "chamber loaded" position of FIGS. 3 and 7. Thus, when seated, the cartridge 48 causes protrusion portion 130 on the other side of the indicator lever 102 to protrude approximately 1/16th of an inch beyond the exterior of the extractor face portion 118 through the aperture 116 of the extractor lever 106. The protrusion portion 130 provides a visual and tactile indication that a cartridge is loaded in the firing chamber. The tip of the protrusion portion 130 may be painted a bright color such as red to further enhance the visibility of that portion of the lever.

On the other hand, if there is no cartridge in the firing chamber, the indicator lever 102 is pivoted in a counterclockwise direction by the spring 122 towards the interior of the firing chamber to the "chamber-empty" position of FIG. 5. Consequently, the tip of the protruding portion 130 of the indicator lever 102 is moved inward (FIG. 5) so that it is flush with (or somewhat interior of) the exterior face portion 118 of the extractor lever 106. This indicates to the shooter that the firing chamber is empty.

Because the indicator lever 102 is carried in a depression of the extractor lever 106, a separate slot or aperture need not be machined into the slide body 20 for the indicator lever 102. Instead, the indicator lever 102 utilizes the slot 114 already provided for the extractor lever 106. This saves an additional machining step and reduces the number of access points for dirt to enter the interior of the gun. Furthermore, the extractor lever 106 and the upper surface of the slot 114 protect the lever 102. Thus, the lever arrangement of the indicator 100 has been found to be less susceptible to jamming and breakage than many previous loaded chamber indicators.

FIG. 8 shows an exploded view of a selective magazine catch assembly 150 in accordance with a preferred embodiment of the present invention. The magazine 151

PR 0125

ET50303

(FIG. 9) for housing the cartridges is inserted through an aperture 152 in the frame 158 to the magazine well 154 defined by the handgrip 156 of the handgun frame 158. The magazine when fully inserted into the magazine well 154, is releasably retained within the well by a suitable magazine retainer mechanism 160. The retainer mechanism 160 includes a release button 162 which when depressed, causes the mechanism 160 to release the magazine from the magazine well 154.

In accordance with the present invention, the selective magazine catch 150 allows the shooter to select either of two magazine removal modes. In one mode, the magazine 151 is allowed to fall freely from the magazine well 154 when the release button 162 is depressed. Alternatively, in the second mode, the magazine catch 150 catches the magazine after it has fallen a predetermined distance. The shooter may then manually extract the magazine the rest of the way from the magazine well 154.

Referring to FIGS. 8–10, the selective magazine catch 150 includes an engagement member 164 having a rounded engagement surface 166 at one end. The engagement member 164 further has a generally cylindrical bore 168 adapted to receive one end of a generally U-shaped spring 170 having legs 171 and 180. As best seen in FIG. 10, the engagement member 164 is carried in a cylindrical bore 172 at one side 190 of the base 174 of the frame hand grip 156. The spring 170 is mounted on the base 174 as shown in FIGS. 9 and 10 with the cross portion 176 between the spring legs 178 and 180 seated in a notch 178 in the handgrip 156. The other leg 180 of the spring 170 has a hooked end 182 which is seated in a bore 184 on the opposite side 185 of the base 174. The spring 170 urges the engagement member inward toward the magazine well.

The magazine catch 150 further includes a cam lever 188 which is placed between the spring leg 171 and the base side portion 190. The cam lever 188 is adapted to pivot about a round protrusion 192 (FIG. 8) which is inserted into a bore 194 in the base side portion 190.

In order to move the engagement member 164 between a "withdrawn" position (FIGS. 9 and 10) and an "engagement" position (FIGS. 11 and 12 respectively), the cam lever 188 has a camming surface 198 on its exterior side for engaging the spring leg 171. The withdrawn and engagement positions of the member 164 correspond to the free fall and catch modes, respectively.

The camming surface 198 includes a pair of generally trough-shaped depressions 200 and 202 positioned on the cam lever 188 to alternately receive the spring leg 171 when the cam lever 188 is in the positions of FIGS. 11 and 9, respectively. The cam lever 188 further has a second protruding member 204 axially aligned with the protruding member 192 on the other side of the lever 188. The member 204 defines a slot 206 to provide a manually actuable control member for pivoting the cam lever 188 between the positions illustrated in FIGS. 9 and 11. A screw driver is recommended to actuate the control member 204.

The depression 202 is machined to space the spring leg 171 from the base side portion 190 so as to position the engagement member 164 in the "withdrawn" position illustrated in FIG. 10. As shown therein, the engagement member 164 does not protrude beyond the inner face 206 of the base side portion 190. Consequently, the engagement member 164 does not interfere with the free fall of the magazine 151 from the magazine well 154 when released by the mechanism 162.

Alternatively, when the cam lever 188 is pivoted so that the spring leg 171 falls into the other depression 200 as shown in FIG. 11, because the depression 200 is deeper than the depression 202, the spring leg 171 is spaced closer to the base side portion 190. As a result, the engagement member 164 protrudes beyond the inner face 206 under the urging of the spring 170. As shown in FIG. 9, the magazine 151 has an indentation 210 which extends a predetermined distance from the base of the magazine. When the magazine is released, the engagement member 164 engages the end 211 of the indentation 210 after the magazine has fallen the predetermined distance thereby catching the magazine. The shooter may then manually extract the magazine the rest of the way from the magazine well 154 causing the engagement member 164 to be pushed back into the bore 172 against the spring 170.

It is evident from the above that the magazine catch 150 allows the shooter to select between either the magazine freefall mode (FIGS. 9 and 10) or the magazine catch mode (FIGS. 11 and 12). To facilitate the movement of the cam lever 188 between the two positions of FIGS. 9 and 11, the camming surface 198 between the troughs 200 and 202 may be rounded. The magazine catch 150 is disposed in depressions 179 and 181 at the frame base 174 to allow the handgrips stocks 380 and 382 to be placed over the magazine catch 150 with the control member 204 accessible through an aperture in the stock 380 as shown in FIG. 1.

FIG. 8 also shows a thumb safety 250 which, in accordance with the present invention, is fully reversible so that the shaft 252 of the thumb safety 250 may be inserted into either side of the firearm frame 158. In this manner, the thumb safety 250 is conveniently usable by either right or left-handed shooters.

The shaft 252 of the safety 250 has an integral lever 258 at one end, by which the shaft 252 may be manually pivoted between a "fire" position and a "safety" position discussed below. The free end 259 of the shaft 252 is inserted transversely across the frame 158 through one of the apertures 254 or 256 of the frame 158. When the shaft 252 is inserted through the left-hand aperture 254 so that the lever 258 is also on the left side of the frame 158, the shaft 252 defines a "left-handed" transverse position for a right handed shooter. Alternatively, when the shaft 252 is inserted through the right-hand aperture 256 so that the lever 258 is also on the right side of the frame 158, the shaft 252 defines a "right-handed" transverse position, for a left handed shooter.

Each shaft transverse position has associated therewith a "fire" position and a "safety" position in which, in the illustrated embodiment, the fire positions correspond to the lever being oriented generally horizontal while the safety positions correspond to the lever being pivoted upward a predetermined angular distance. In either transverse position of the shaft 252, the lever 258 is pointed generally forward so that the shaft 252 is generally upside down in one transverse position relative to the other transverse position. A suitable detent mechanism 159 cooperates with depressions 261 on both sides of the frame to releasably hold the lever 258 in the fire and safety positions.

The handgun 10 of the illustrated embodiment is of a type in which the hammer actuator mechanism 260 includes a sear 262 which has a rearward pointing ledge

PR 0126

ET50304

264 which releasably supports the spring-loaded hammer 18 in the cocked position. When the trigger 266 is pulled, a trigger bar 268 coupled to the trigger 266 by a pivot pin 270, is pushed rearward. The end 272 of the trigger bar 268 engages a pair of downward extending levers 274 of the sear 262 causing the sear 262 to pivot in a counterclockwise direction (as viewed in FIG. 8) within the sear housing 276. This pivotal movement of the sear 262 moves the sear ledge 264 out of the way of the hammer 18 allowing the hammer to fall and strike the firing pin 22 (FIG. 1). However, as explained below, when the safety shaft 252 is in either of the safety positions, the sear 262 is prevented from pivoting out of the way of the hammer 18 thereby preventing discharge of the gun.

As shown in FIG. 13, the safety shaft 252 has a pair of vertical projecting members 280 and 282 extending in opposite directions. When assembled in the sear housing 276, the shaft 252 is pivotally carried within a cylindrical bore 284 (FIG. 14) extending transversely through the sear housing 276. The sear housing 276 has a left-hand slot 286 adjacent the bore 284 which allows the projecting members 280 and 282 to pivot within the sear housing 276.

In the fire positions, the projecting members 280 and 282 are oriented vertically so that the sear 262 can pivot unhindered by the shaft projecting member. Thus, as shown in FIG. 16, with the shaft 252 inserted through the frame lefthand aperture 254 so that the safety lever 258 is on the left-hand side of the gun, the projecting member 280 is clear of the sear 262 when the lever 258 is oriented horizontally corresponding to the fire position. However, should the safety lever 258 be pivoted in a clockwise direction (as viewed in FIG. 17), approximately 20 degrees to the safety position, the shaft projecting member 280 will be pivoted rearward towards the sear 262. In this position, if the trigger 266 is pulled, the shaft projecting member 280 will engage an opposing projecting member 288 of the sear 262, thereby preventing the sear 262 from pivoting and the gun from being discharged.

FIG. 18 shows the safety shaft 252 inserted through the right-hand frame aperture 256. The sear housing 276 has a second (right-hand) slot 290 similar to the left-hand slot 286 on the other side of the sear housing to accommodate the pivoting of the projecting members 280 and 282. With the safety shaft 252 in the right-hand transverse position shown in FIG. 18, the other shaft projecting member 282 is now projecting upward from the shaft. When the safety lever 258 is pivoted to the safety position, the projecting member 282 is moved below an opposing projecting member 292 (FIG. 13) similar to the projecting member 288 on the other side of the sear 262. Should the trigger be pulled with the shaft 252 in the safety position, the projecting member 282 will engage the opposing projecting member 292 of the sear preventing the sear from releasing the hammer. Thus, it is seen that the projecting members 280 and 282 allow the thumb safety 250 to be fully operational whether installed on the left-hand or the right-hand side of the frame.

The sear housing 276 has longitudinal apertures 300 on either side of the sear housing 276 to accommodate the shaft projecting members 280 and 282 as they are inserted into the slots 286 or 290. To releasably retain the shaft 252 in the left-hand transverse position within the sear housing 276, the shaft 252 has a first notch 302 (FIG. 13) positioned on the shaft so that it is aligned with a slot 304 (FIGS. 24 and 25) in the sear housing adjacent the bore 284 when the shaft 252 is inserted into the sear housing 276 in the left-hand transverse position. Engaging both the shaft notch 302 and the housing slot 304 is the leg 306 of a sear spring 308 which biases the sear 262 in a counterclockwise direction as viewed in FIG. 15. The coil of the sear spring 308 is carried on a pin 310 which pivotally supports the sear 262 within the sear housing 276. The other end 312 of the sear spring 308 engages the sear 262 to bias it in the hammer support position.

With the sear spring leg 306 disposed on the aligned shaft notch 302 and housing slot 304, the shaft 252 is locked against substantial transverse motion but the sear spring leg 306 does not prevent the pivotal movement between the safety and fire positions previously described. To release the shaft 252 to allow the shaft to be inserted into the other side of the gun frame, one merely pries the spring leg 306 upward out of the shaft notch 302 freeing the shaft 252 to be pulled out. The shaft 252 has a second notch 320 (FIG. 13) positioned to align with the housing slot 304 when the shaft 252 is inserted from the other side as illustrated in FIG. 18.

Since the spring leg 306 is biased downward, the end of the shaft 252 has a camming surface 322 (FIG. 13) which pries the spring leg 306 upward as the shaft is inserted through the sear housing bore 284 with the lever 258 oriented vertically. Once the spring leg 306 is pried upward, the safety lever 258 may be pivoted forward which further pries the spring leg 306 upward to allow the shaft 252 to be inserted the rest of the way into the sear housing 276. When the shaft notch 302 (or 320) reaches the housing slot 304, the sear spring leg 306 snaps down into the notch retaining the shaft 252 within the sear housing.

Concentric with the shaft 252 is a circular shoulder 324 (FIG. 13) on the lever 258, which is adapted to slidingly mate with the walls of the particular aperture 254 or 256 through which the shaft 252 is inserted. The safety 258 further includes a bushing 330 which is inserted into either of the apertures 254 or 256. The free end of the shaft 252 is inserted into an axially aligned bore 338 of the bushing 330. The bushing 330 has a shelf member 332 which engages opposing flange members 114 and 116 to support the sear housing.

Thus, to reverse the thumb safety, the safety shaft 252 is released by prying up the spring by 306 and removing the shaft 252. This allows the sear housing to be removed and reinstalled with the bushing 330 on the other side of the frame. The safety shaft is then reinserted from the other side until the spring retainer again locks the shaft into place. It is seen from the above that the thumb safety 250 is capable of being easily installed on the either side of the gun by the typical user without the aid of a gunsmith.

FIG. 19 shows an exploded view of alternative embodiment of the safety shaft of FIGS. 13–17. The safety shaft 340 of FIG. 18 is part of an ambidextrous thumb safety and includes two shaft portions 342 and 344. The shaft portion 342 has one end 346 which is shaped substantially as a half cylinder and is adapted to mate with a similarly shaped end 348 of the other shaft portion 344. When mated, the shaft portions 342 and 344 form a complete shaft 349 as shown in FIG. 19. Each shaft portion has an integrally formed lever 350 similar to the shaft lever 248 of FIG. 12.

As shown in FIGS. 18 and 19, the shaft portion 342 has a notch 352 which is positioned to align with a

PR 0127

ET50305

notch 354 of the other shaft portion 344 when the shaft portions 342 and 344 are mated together. The notches 352 and 354 of the two shaft portions form a single notch 355 similar to the notch 302 of the previous embodiment so that the sear spring leg 306 cooperates with both of the notches 352 and 354 and the sear housing notch 304 to releasably retain both shaft portions 342 and 344 in the sear housing 276. A second pair of notches 356 and 358 on the other sides of the shaft portions 342 and 344, respectively, form a second complete notch 360 similar to the notch 320 of FIG. 12 to allow the shaft portions to be reverted so that it doesn't matter which shaft portion is inserted through which frame aperture.

It has been found that the split shaft safety 340 with integral shaft levers 350 provides a stronger and more reliable ambidextrous thumb safety mechanism than many previous ambidextrous safeties. Furthermore, the above described spring and notch arrangement allows for the rapid release and reinstallation of the shaft portions.

It will, of course, be understood that modifications of the present invention, in its various aspects will be apparent to those skilled in the art, some being apparent only after study and others being merely matters of routine mechanical design. For example, the above-described safety devices can be utilized on other types of firearms. Other embodiments are possible with the specific designs dependent on the particular application. As such, the scope of the invention should not be limited by the particular embodiments herein described which should be defined only by the appended claims and equivalents thereof.

We claim:

1. A firing pin block for a gun having a body and a firing pin for striking a cartridge in the gun, comprising:

a bolt adapted to slide transversely through said body between a "fire" position and a "safety" position, said bolt having a non-circular opening through which the firing pin travels;

wherein the firing pin has a first collar and the bolt opening is constricted at one side so that the outer diameter of the pin collar exceeds the inner diameter of the opening at the constricted side, said collar being located on the pin so that when the bolt is in the safety position, the constricted side of the bolt opening prevents the firing pin collar from passing through the bolt opening and thereby preventing said firing pin from reaching the cartridge.

2. The firing pin block of claim 1 wherein the gun has a hammer for striking the firing pin at one end of the pin and the firing pin further has a second collar spaced from the first collar and the bolt has a camming surface shaped and positioned to engage the second firing pin collar and move the firing pin away from the hammer as the bolt is moved from the fire position to the safety position.

3. The firing pin block of claim 2 wherein the gun has a hammer striking surface which defines a hole through which said one end of the firing pin protrudes to be struck by the hammer, said second collar and camming surface being shaped so as to withdraw said one end of the firing pin below the surface of the gun hammer striking surface to prevent the hammer from reaching said one end of the firing pin.

4. The firing pin block of claim 1 further comprising a detent wherein the bolt defines a pair of depressions spaced on the bolt so that the detent releasably engages the first and second depressions to releasably hold the bolt in the fire and safety positions, respectively.

5. In a gun having a spring-loaded hammer, a trigger and a sear cooperating with the trigger to releasably support the hammer until the trigger is pulled, the improvement comprising:

a safety having a shaft extending transversely through the gun, said shaft comprising two axially aligned shaft portions, each shaft portion having an end shaped substantially as a half cylinder and adapted to mate with the other half cylindrically shaped shaft portion when assembled to form a complete cylinder, each shaft portion having an integral manually actuable lever at the other end of the shaft portion for pivoting the safety shaft when assembled between a "fire" position and a "safety" position, and at least one of said shaft portions having means for engaging the sear to prevent release of the support of the hammer when the safety shaft is in the safety position.

6. The gun of claim 5 wherein each half cylindrically shaped end of the shaft portions defines a notch positioned to align with the notch of the other shaft portion when assembled, the gun further comprising retainer means for simultaneously engaging both shaft portion notches to retain the shaft portions together.

7. The gun of claim 6 further comprising a sear housing for pivotally supporting the sear and the safety shaft, and a spring having a leg for biasing the sear in the hammer support position,

wherein the retainer means comprises a slot defined by the sear housing adjacent the safety shaft portion notches and further comprises the spring leg being carried in the sear housing slot and the shaft portion notches.

8. The gun of claim 5 wherein the shaft is pivoted between a second "fire" position and a second "safety" position by the shaft levers when the transverse position of the shaft is reversed, and the gun further comprises a second means on at least one of the shaft portions for engaging the sear to prevent release of the support of the hammer when the safety shaft is in the second safety position.

9. In a gun having a spring-loaded hammer, a trigger, and a sear cooperating with the trigger to releasably support the hammer until the trigger is pulled, the improvement comprising:

a reversible safety comprising a shaft having a manually actuable lever at one end and a free end adapted to be inserted transversely through the gun selectively from either side of the gun, said shaft defining a first transverse position when the free end is inserted from one side and defining a second transverse position when the shaft free end is inserted from the other side of the gun, said lever for pivoting the shaft between a first "fire" position and a first "safety" position when the shaft is in the first transverse position, said lever further for pivoting the shaft between a second "fire" position and a second "safety" position when the shaft is in the second transverse position, said shaft having means for engaging the sear to prevent release of the hammer when the shaft is in either of said first or second safety positions associated with said first and second transverse positions, respectively.

10. The gun of claim 9 wherein the shaft engagement means comprises a pair of projecting members extending in substantially opposite directions, each shaft pro-

PR 0128

ET50306

jecting member for engaging the sear when the shaft is in one of said safety positions associated with said first and second transverse positions.

11. The gun of claim 10 wherein the sear also has a pair of projecting members, each sear projecting member being positioned to be engaged by one of said shaft projecting members when the shaft is in a safety position associated with that shaft projecting member.

12. The gun of claim 9 further comprising means for releasably retaining the shaft when the shaft is in either of the first or second transverse positions.

13. The gun of claim 12 wherein the gun has a sear housing for pivotally supporting the sear and the shaft and a spring having a leg for biasing the sear in the hammer support position, wherein the retaining means comprises a pair of notches defined by the shaft and a slot defined by the sear housing, said notches being positioned on the shaft so that the housing slot is aligned with one shaft notch when the shaft is in the first transverse position and is aligned with other shaft notch when the shaft is in the second transverse position, said retaining means further comprising said leg of the spring carried within the sear housing slot and one of said shaft notches wherein the shaft may be released by lifting the spring leg out of the associated shaft notch.

14. In a gun having a firing pin which has one end protruding beyond a hammer striking surface and adapted to be struck at said one end causing the other end of the pin to strike a cartridge within the gun, the improvement comprising:

means for withdrawing and releasably holding the firing pin below the hammer striking surface to prevent the hammer from reaching the firing pin.

15. The gun of claim 14 wherein the withdrawing and holding means comprises a movable member and a camming surface carried on one of said member or firing pin and adapted to engage the other of said member or pin to withdraw the pin.

16. The gun of claim 14, said improvement further comprising a firing pin block bolt having relatively large and small diameter openings formed therein, said bolt being movable to either a free position for bringing said relatively large diameter opening into alignment with the longitudinal axis of said firing pin or to a safety position for bringing said relatively small diameter opening into alignment with the longitudinal axis of said firing pin, said relatively large and small diameter openings being particularly sized relative to said firing pin, so that when said bolt is moved to the fire position, said firing pin may pass through the relatively large diameter opening therein to strike said cartridge, and when said bolt is in the safety position, said firing pin cannot pass through the relatively small diameter opening therein, whereby to prevent said firing pin from reaching said cartridge.

17. The gun of claim 16, wherein said firing pin has a collar formed therearound and said relatively small diameter opening has a peripheral ledge, said collar being engaged by and seated against said ledge to block the passage of said firing pin through said small diameter opening and toward said cartridge when said firing pin block bolt is moved to the safety position and said firing pin is aligned with said small diameter opening.

18. In a gun having a spring-loaded hammer, a trigger and a sear cooperating with the trigger to releasably support the hammer until the trigger is pulled, the improvement comprising:

safety means including a shaft having a manually-actuable lever at one end and an opposite free end adapted to be inserted transversely through the gun from a side thereof, said lever rotating the shaft between fire and safety positions; and

said shaft having means to engage the sear and thereby prevent a release of the hammer and a discharge of the gun when said lever rotates said shaft to the safety position.

19. The gun of claim 18, wherein said shaft engagement means comprises at least one member projecting outwardly from said shaft, said outwardly projecting member being rotated with said shaft to engage said sear and thereby prevent a release of the hammer and a discharge of the gun when said lever rotates said shaft to the safety position, and the outwardly projecting member being rotated out of engagement with said sear to release the hammer and permit a discharge of the gun when said lever rotates said shaft to the fire position.

20. The gun of claim 19, wherein said sear also has at least one outwardly projecting member, said sear projecting member positioned so as to be engaged by said shaft projecting member when said lever rotates said shaft to the safety position.

21. The gun of claim 18, further comprising a sear housing to pivotally receive said sear therewithin and means to releasably retain said shaft within said sear housing, said retaining means comprising a sear spring having first and second projecting ends, a first projecting end of said sear spring engaging a notch in said shaft and an aligned slot in said sear housing, and the second projecting end of said spring engaging said sear to bias said sear in a hammer supporting position.

22. The gun of claim 21, wherein said sear spring is a coil spring, the coil of said spring being carried by a pin which pivotally supports the sear within said sear housing.

* * * * * \

PR 0129

ET50307

(19) BUNDESREPUBLIK DEUTSCHLAND

DEUTSCHES PATENTAMT

(12) Offenlegungsschrift

(10) DE 43 03 333 A 1

(51) Int. Cl.5: F41A 17/06

(21) Aktenzeichen: P 43 03 333.4

(22) Anmeldetag: 5. 2. 93

(43) Offenlegungstag: 30. 6. 94

DE 43 03 333 A 1

(30) Innere Priorität: (22) (33) (31)

24.12.92 DE 42 44 239.7

(71) Anmelder:

Schreiber, Hans, Dr. Dr., 68167 Mannheim, DE

(74) Vertreter:

Ratzel, G., Dipl.-Chem. Dr.rer.nat., Pat.-Anw., 68165 Mannheim

(72) Erfinder:

gleich Anmelder

(54) Verfahren und Bausatz zur legitimierten Betätigung von Schußwaffen

(57) Vorgestellt wird ein Bausatz zur legitimierten Betätigung von Schußwaffen. In der dargestellten Variante ist die Schußwaffe durch einen elektronisch entriegelbaren Bolzenmechanismus (6, 7, 8, 9) dargestellt, der durch den Waffen-Mikroprozessor (19) betätigt wird und die Waffe in die Position "elektronisch gesichert" oder "entsichert" bringt. Die Waffe selbst steht damit in Funktionsbereitschaft, die durch eine eingelesene PIN gewährleistet ist. Sie ist stimmig in Kontakt mit einer Kommunikationseinheit (13), die bevorzugt am Handgelenk getragen wird und die in kurzen Zeitintervallen oder kontinuierlich mit der Waffe über ein frequenzmoduliertes Signal kommuniziert, wobei der elektronische Waffen-Sicherungsmechanismus automatisch anspricht, wenn die Kommunikationsvorrichtung (13) eine größere Distanz als z. B. 10 oder 20 cm zur Waffe beträgt. Damit ist gewährleistet, daß bei Entwendung der Waffe ohne Besitz der Kommunikationseinheit diese in die Position "elektronisch gesichert" gebracht wird.

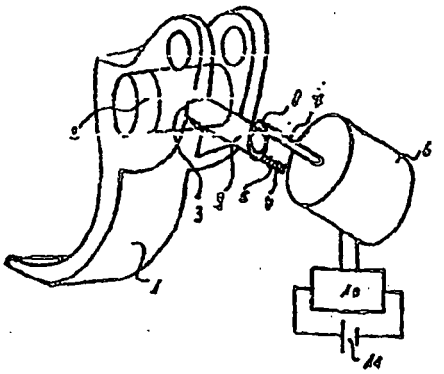

DE 43 03 333 A 1

Die folgenden Angaben sind den vom Anmelder eingereichten Unterlagen entnommen

BUNDESDRUCKEREI 05.94 408 026/402 13/26

PR 0131

ET50309

Beschreibung

Vom gleichen Anmelder wurden bereits Erfindungen eingereicht, die sich insbesondere mit der Problematik der PIN beschäftigen.

Die PIN als sog. Personalidentificationnumber gewinnt in unserer heutigen Zeit zunehmend an Bedeutung, insbesondere bei Scheckkarten, Schließanlagen oder anderen Sicherheitsbereichen bzw. Sicherheitsvorrichtungen trotz Bestrebungen, andere Identifikationsverfahren zu entwickeln und zur Serienreife zu bringen.

Nun bieten gerade Feuerwaffen, und insbesondere Handfeuerwaffen ein hohes Gefahrenpotential, wenn sie ohne Legitimation von jedermann bedienbar sind.

Nach dem gegenwärtigen Stand der Technik ist eine solche Legitimation, wie sie durch eine PIN erreichbar wäre, noch nicht realisiert.

Die Aufgabe der Erfindung besteht daher darin, die Feuerwaffe nur von der Person betätigbar zu machen, die sich mit der nur ihr bekannten Waffen-PIN legitimiert.

Selbstverständlich kann bei dieser Anmeldung nicht vorgebeugt werden, daß unlegitimierte Personen, die sich in den Besitz der Waffe bringen, diese bei entsprechender Fachkenntnis so manipulieren, daß sie wieder ohne Zugangsberechtigung funktionsbereit ist.

In gewissen Situationen jedoch, wobei bevorzugt der Personenschutz durch die Polizei oder andere Institutionen angesprochen ist, erscheint es sinnvoll, Gefahrensituationen vorzubeugen, die sich möglicherweise durch unerwartetes Entwenden der Waffe ergeben.

Damit stellt sich gleichzeitig eine zweite Aufgabe an die Erfindung, die darin besteht, eine PIN-legitimierte Waffe in der Hand eines Täters nutzlos zu machen.

Die Erfindung wird dabei dahingehend gelöst, daß z. B. über eine induktive Kopplung, wobei ein chipgesteuerter Taktgenerator ein frequenz- und/oder amplitudenmoduliertes Signal laufend absendet, das vom Waffen-Chip in einer bestimmten Grenzentfernung erkennbar ist und wobei der Waffen-Chip das modulierte Signal als legitim erkennt und die Waffe bevorzugt in ständiger Chipkommunikation in Funktionsbereitschaft hält. Diese Funktionsbereitschaft wird außerdem bevorzugt automatisch dann erreicht, wenn der legitimierte Waffenbenutzer mit seiner Kommunikationsvorrichtung in den Grenzbereich des Waffen-Chipempfangsgerät und die Kommunikation aufgebaut wird.

Aus diesem Grunde ist es vorteilhaft, die Kommunikationsvorrichtung mit ihrer Elektronik und mit ihrer Stromversorgung bevorzugt in Form einer am Handgelenk tragbaren Form zu gestalten, die damit gleichzeitig in dieser Position die Grenzdistanz zur Waffe darstellt.

Um die Kommunikation der Einheiten Waffe und Kommunikationsvorrichtung sicherzustellen, benötigen beide mindestens ein "Fenster", das es jeweils erlaubt, das modulierte Signal auszusenden bzw. zu empfangen, womit bereits verdeutlicht ist, daß bevorzugt auch die Waffe z. B. über einen Taktgenerator bzw. Demodulator verfügt. Selbstverständlich sind auch andere Kommunikationsmöglichkeiten wie Funk, Infrarot o. dgl. verstellbar, bei denen jedoch die Grenzdistanz schwer realisierbar ist. Daneben kann zur Grenzdistanzbestimmung auch ein magnetisches Feld bzw. die magnetische Feldstärke benutzt werden.

Dabei sollte bevorzugt gewährleistet sein, daß die Waffe im Holster von der ständigen Kommunikation mit der Kommunikationsvorrichtung befreit ist bzw. daß die Kommunikationsvorrichtung erst in der Schußhand aktiviert wird. Die Batteriekapazität wird dabei optimal ausgenutzt.

Damit ist es möglich, durch die zeitliche Begrenzung der PIN-Legitimation die Waffe für den spezifischen Gebrauch funktionsbereit zu halten, so daß nicht erst in einer Gefahrensituation die PIN eingegeben werden muß.

In der praktischen Anwendung stellt sich der Vorgang damit so dar, daß der Sicherheitsbeamte in Kenntnis der Gefahrensituation seine Waffe durch die PIN programmiert und gleichzeitig den Schußarm bevorzugt im Bereich des Handgelenks mit der Kommunikationsvorrichtung versieht.

Sollte jetzt durch Entwenden der Waffe von einem Täter der Versuch unternommen werden, diese gegen den Sicherheitsbeamten zu richten, befindet sich die Waffe außerhalb des Kommunikations-Grenzbereichs von Waffe und Kommunikationsvorrichtung, so daß der Waffen-Chip automatisch die elektronische Sicherung aktiviert.

Beim gegenwärtigen Stand der Technik, wobei die letzte Anmeldung des gleichen Erfinders auszunehmen ist, ist dem Anmelder keine Schrift bekannt, die darlegt, die PIN ohne ein alpha-numerisches Tastenfeld einzugeben.

Mit der letzten Anmeldung des Verfassers wurde jedoch ein Verfahren vorgeschlagen, das es erlaubt, durch entsprechende Funktionstasten o. dgl. ein bestimmtes Zahlen- und/oder Ziffernpotential solange abzuarbeiten, bis über ein Display die PIN einprogrammiert und betätigbar ist.

Eine andere Möglichkeit ist dahingehend vorstellbar, die PIN über eine Chipkarte oder einen sonstigen Informationsträger in die Waffe einzuschieben bzw. der Waffe zuzuordnen und diese damit zu legitimieren, wobei die Legitimation durch Entfernen der Chipkarte oder der sonstigen Vorrichtung aufgehoben ist. Selbstverständlich birgt dies die Gefahr, daß die Chipkarte oder eine andere Vorrichtung in oder an der Waffe verbleibt und damit diese unbegrenzt legitimiert ist. Ausgenommen ist selbstverständlich die vom Anmelder vorgeschlagene Möglichkeit, die Chip-PIN z. B. durch einen Quarztimer ebenfalls zeitlich zu limitieren.

Die Erfindung wird nun anhand der Verfahrensansprüche 1—17 und der Vorrichtungsansprüche 18—48 näher erläutert. Darüber hinaus zeigen die Fig. 1—3 eine mögliche Variante einer elektronisch gestalteten Sicherung der Schußwaffen.

Dabei zeigt

Fig. 1 in schematisierter Detaildarstellung eine mögliche Variante einer PIN-legitimierten Feuerwaffe im Bereich des Abzugs,

Fig. 2 in schematisierter Anordnung den Bolzenverriegelungsmechanismus in einer realisierbaren Art und Weise,

Fig. 3 in schematisierter Anordnung in der Art eines Blockschaltbildes eine Möglichkeit einer induktiven Kommunikationskopplung.

Fig. 1 zeigt in schematisierter Detaildarstellung eine mögliche Variante einer PIN-legitimierten Feuerwaffe im Bereich des Abzugs. Dabei ist Abzug (1) mit Walze (2) drehbar gelagert, die hier nur beschränkt darstellbar eine Aussparung (3) aufweist, in die Verriegelungsbolzen (9) ruht. Es ist symbolisiert dargestellt, daß dieser durch Fortsatz (4) unter Federspannung (5), deren Abstützung hier nicht darstellbar ist, in die Aussparung oder Falle (3) ständig eingreift.

Der hier symbolisiert dargestellte Mikromotor (6) be-

PR 0132

ET50310

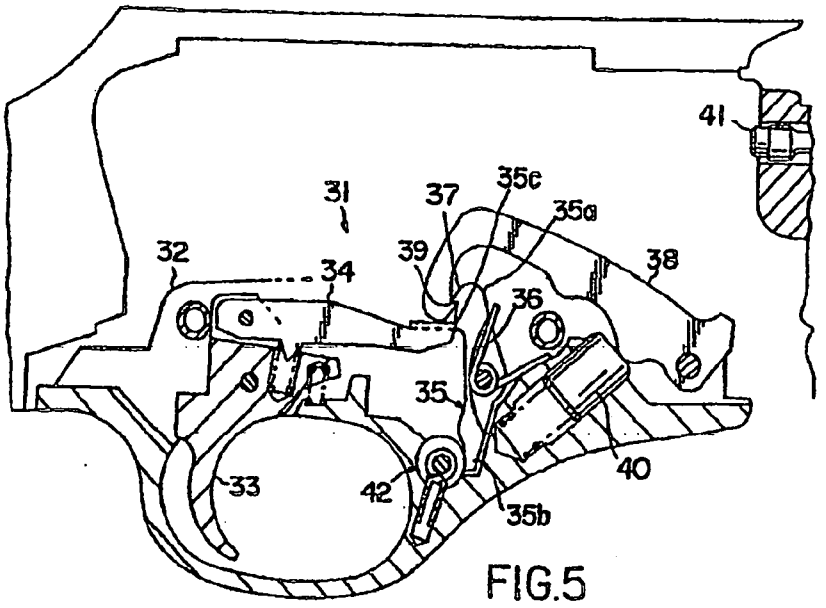

FIG.5

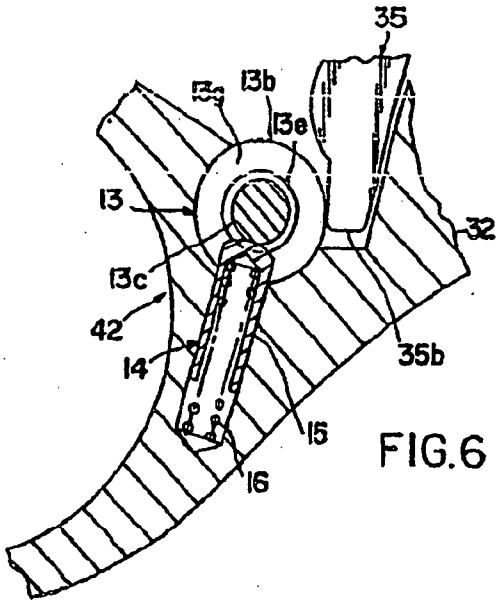

FIG.6

PR 0134

ET50312

TRIGGER MECHANISM FOR SMOOTH-BORE FIREARMS

This invention relates to a trigger mechanism for smoothbore firearms of the type comprising a trigger, a release lever associated with the trigger, an engagement lever operated in rotation by the release lever opposing spring devices and having an engagement tooth, a hammer which moves angularly under the action of second spring devices from an armed position in which a counter-tooth on the hammer is engaged and held by the engagement tooth, to a firing position, as well as a safety device to prevent the hammer from accidentally abandoning the armed position.

As is well known, firearms must be prevented, as a result of being knocked or dropped, from accidentally firing a shot and for this purpose the trigger mechanisms have safety devices to prevent the hammer from reaching the firing position and striking the percussion pin.

Conventional safety devices are usually fitted on the trigger, so that they securely lock the trigger; in this condition the hammer, engaged by the tooth of the engagement lever, is held in the armed position. As a result of particularly strong knocks or play due to wear or weakening of spring elements, however, the counter-tooth of the hammer disengages itself from the engagement tooth, thus enabling the hammer to reach the firing position notwithstanding the trigger being locked.

A safety device that acts directly on the hammer is also proposed, so as to avoid the above-mentioned drawbacks. It was found, however, that whh such devices the hammer is effectively locked in the armed position, but if for example due to a knock the engagement tooth disengages itself from the counter-tooth of the hammer becomes released immediately into the firing position, resulting in obvious drawbacks.

The problem that lies at the heart of this invention is to design a trigger mechanism which has structural and operating characteristics such as to overcome the drawbacks mentioned as regards the known state of the art.

This problem is resolved according to the invention by a trigger mechanism characterised in that the said safety device comprises a positive stop fitted removably at the said engagement lever to prevent rotation of the latter.

The characteristics and advantages of a trigger mechanism according to the present invention will emerge from the following description of a preferred embodiment, given by way of example and not limited by the attached drawings.

In these drawings:

FIG. 1 is a side, schematic cross-sectional view of a trigger mechanism of a smooth-bore firearm according to the invention;

FIG. 2 is an enlarged scale view of a detail of the mechanism shown in FIG. 1;

FIGS. 3 and 4 are plan, schematic and partly cutaway view of the above-mentioned detail of the trigger mechanism in different operating conditions; and

FIGS. 5 and 6 are side, schematic cross sectional view of another embodiment of a trigger mechanism according to the present invention.

With reference to the above-mentioned Figures, 1 shows a trigger mechanism a a whole according to the invention for a smooth-bore firearm. The example

under consideration refers in particular to a 20-caliber semi-automatic rifle.

The trigger mechanism 1 comprises a supporting body 2 in which pivots a trigger 3. At one end 3a of the trigger 3 pivots a release lever 4 with a first arm 4a and a second arm 4b, defining with the first arm an angle of approximately 120°, in which is formed a ledge 4c. Trigger mechanism 1 comprises an engagement lever 5 pivoted in body 2 and operated in rotation by release lever 4 opposing first spring devices 6, as will emerge from the rest of the description.

Engagement lever 5 has a first end 5a with an engagement tooth 7 in the opposite part to the release lever 4, as well as an opposing second end 5b in which is formed a counterledge 5c.

The said first spring devices 6 are fitted between the first arm 4a of the release lever 4 and the first end 5a of lever 5, and act constantly to press the ledge 4c against the counter-ledge 5c.

A hammer 8 is, also pivoted in body 2. It will be observed that the axes of rotation of hammer 8, engagement lever 5 and release lever 4, as well as trigger 3 are parallel to each other and extend transversely across body 2.

Hammer 8 has a counter-tooth 9 and is angularly movable under the action of the second spring devices 10, fitted between body 2 and hammer 8, from an armed position in which the counter-tooth 9 is engaged and held by engagement tooth 7, to a firing position in which hammer 8, disengaged from tooth 7, strikes percussion pin 11 of the firearm.

Trigger mechanism 1 also comprises a safety device 12 to prevent accidental firing, which is in particular designed to prevent hammer 8 from accidentally abandoning the above-mentioned armed position.

Device 12 comprises a pin 13 extending transversely as described above, fitted in body 2 in close proximity to engagement lever 5 and sliding between a first position, locking position, and a second position, firing-enable position.

In particular, pin 13 has two cylindrical sections 13a and 13b and two annular adjacent grooves 13c and 13d, formed circumferentially between the said cylindrical sections 13a and 13b.

Furthermore, there is an annular projection 13e between grooves 13c and 13d, while there are shoulders 13f and 13g between cylindrical section 13a and groove 13c and between groove 13d and cylindrical section 13b.

It will be noted that, when pin 13 is in the first locking position, the cylindrical section 13a interferes with the trajectory of the second end 5b and constitutes a positive stop to prevent the rotation of engagement lever 5.

Furthermore, pin 13 is shaped so that in the said first position the opposite cylindrical section 13b protrudes beyond body 2.

In the second firing-enable position, pin 13 is positioned with groove 13c at end 5b, so as not to interfere with engagement lever 5. In this second position cylindrical section 13a protrudes beyond body 2.

Safety device 12 has additional stop devices 14, cooperating with the grooves 13c and 13d and with the shoulders 13f and 13g, to hold pin 13 in the first or second position. These stop devices preferably comprise a pawl 15 with respective spring devices 16, fitted in body 2 and capable of clicking removably into one or other groove 13c, 13d.

PR 0135

ET50313

There follows a description of the operation of the trigger mechanism 1 according to the present invention.

Hammer 8 is brought to the armed position in a manner which in itself is conventional, for example by pulling back a breech-block on the firearm, not shown.

In the arm position, counter-tooth 9 of hammer 8 is engaged with tooth 7 of engagement lever 5 and held in the armed position by the action of the first spring devices 6.

In this condition and with pin 13 in the second position, or fire-enable position, with cylindrical section 13a protruding beyond body 2 and groove 13c at end 5b of engagement lever 5, acting on trigger 3, release lever 4, associated with the trigger, causes engagement lever 5 to rotate so as to disengage counter-tooth 9 and release hammer 8 into the firing position.

With pin 13 in the first position, or locking position, with cylindrical section 13a interfering with end 5, engagement lever 5 is prevented from rotating and consequently countertooth 9 of hammer 8 is prevented from disengaging from engagement tooth 7.

It is important to stress that with pin 13 in the locking position neither accidental knocks nor the operation of trigger 3 can cause hammer 8 to abandon the armed position.

Furthermore, it should be noted that in order to bring pin 13 into the first or second position it is sufficient to press one or other of cylindrical sections 13a and 13b so that sprung pawl 15 overcomes projection 13e and positions itself in the desired groove 13c or 13d.

FIGS. 5 and 6 show another embodiment of a trigger mechanism according to the invention, intended for 12-caliber semi-automatic rifle of the smooth-bore type.

Such a trigger mechanism is indicated as a whole with the reference number 31 and comprises, fitted on a supporting body 32, a trigger 33, a sprung release lever 34 cooperating with the trigger 33, an engagement lever 35 centrally pivoted in body 32 and rotationally operated by the release lever 34 counteracting with spring devices 36.

The engagement lever 35 defines a first end 35a, provided with an engagement tooth 37 oriented toward the release lever 34, and a second end 35b opposite to the first one.

Close to tooth 37, a ledge 35c is formed on the engagement lever 35 and it is constantly urged by spring devices 36 toward an end of the release lever 34.

A hammer 38, pivoted in body 32 and provided with a counter-tooth 39, is angularly movable upon the action of relative spring means 40 from an armed position in which the counter-tooth 39 is engaged and held by the engaging tooth 37, to a firing position in which the hammer 38 strikes a pin 41 of the firearm.

Reference number 42 indicates a safety device, intended for preventing accidental firing, acting on second end 35b of engagement lever 35 in order to prevent the rotation of this latter and consequently preventing the hammer 38 from abandoning its armed position.

The safety device 42 is completely equivalent to the safety device 12 herein described with reference to FIGS. 1 to 4; therefore the components of device 42 will be indicated in the figures with the same reference number as those used for safety device 12 and will not be re-described.

Furthermore the actuation of the safety device 42 as well as the actuation of the trigger mechanism 31 are to be considered analogous to those of safety device 12 and trigger mechanism 1.

The trigger mechanism according to the present invention prevents the risk of accidental firing, however hard the firearm may be knocked. Furthermore, the safety device of the trigger mechanism may be operated manually, simply and quickly, and, due to its advanced position in respect to the trigger may be equally used by both right and left handed.

Clearly, numerous variations and modifications may be made to the trigger mechanism previously described, all of which fall are covered by the present invention as defined in the following claims.

I claim:

1. A trigger mechanism for smooth-bore firearms comprising a trigger (3, 33), first pivot means, mounting said trigger for pivoting movement, a release lever (4, 34), second pivot means mounting said release lever for pivoting movement, an engagement lever (5, 35), third pivot means mounting said engagement lever for pivoting movement, a hammer (8, 38), fourth pivot means mounting said hammer for pivoting movement, said engagement lever (5, 35) having opposite ends (5a, 35a; 5b, 35b), a first (5a, 35a) of said engagement lever opposite ends having a tooth (7, 37) in engagement with a counter tooth (9, 39) of said hammer in the armed position thereof, and safety means (12) operative in a first position for engaging a second (5b, 35b) of said engagement lever opposite ends to prevent rotation of said engagement lever (5, 35) in a direction to release the engagement between said tooth (7, 37) and counter tooth (9, 39) and being further operative in a second position for disengaging said second engagement lever opposite end (5b, 35b) to permit rotation of said engagement lever (5, 35) in a direction to release the engagement between said tooth (7, 37) and counter tooth (9, 39).

2. A trigger mechanism as defined in claim 1 including spring means (6, 36) for biasing said engagement lever (5, 35) and hammer (8, 38) relative to each other in a direction for maintaining said tooth (7, 37) and counter tooth (9, 39) in engagement with each other in the armed position thereof.

3. The trigger mechanism as defined in claim 1 wherein said first through fourth pivot means have axes in generally parallel relationship to each other, and said safety means (12) includes a pin (13) reciprocally slidable in parallel relationship to said first through fourth pivot means axes.

4. The trigger mechanism as defined in claim 1 wherein said release lever (4, 34) and said engagement lever (5, 35) have respective ledges (4c, 34c; 5c, 35c) in engagement with each other in the first position of said safety means (12).

5. A trigger mechanism as defined in claim 4 including spring means (6, 36) for biasing said engagement lever (5, 35) and hammer (8, 38) relative to each other in a direction for maintaining said tooth (7, 37) and counter tooth (9, 39) in engagement with each other in the armed position thereof.

6. The trigger mechanism as defined in claim 5 wherein said first through fourth pivot means have axes in generally parallel relationship to each other, and said safety means (12) includes a pin (13) reciprocally slidable in parallel relationship to said first through fourth pivot means axes.

7. The trigger mechanism as defined in claim 4 wherein said first through fourth pivot means have axes in generally parallel relationship to each other, and said safety means (12) includes a pin (13) reciprocally slidable in parallel relationship to said first through fourth pivot means axes.

* * * * *

PR 0136

ET50314

PR 0137

wegt über Welle (7) Exzenter (8), der hier ebenfalls nur als Schemadarstellung anzusehen ist und der es in seiner endgültigen Ausgestaltung gestattet, daß auch durch starke Zugkräfte auf Abzug (1) dieser dank des Verriegelungsbolzens (9) nicht drehbar ist, da es Voraussetzung wäre, daß dieser aus seiner Falle (3) gleitet, was wiederum in der Position "gesichert" durch Exzenter (8) unmöglich ist. Selbstverständlich sind auch andere Bolzensperrmechanismen, wie z. B. ein bistabiles Verriegelungselement denkbar. Hier würde z. B. ein Kern mit Permanentmagneten in einem Elektromagneten verfahrbar und in zwei Positionen stabilisierbar sein, wovon eine den Verfahrweg des Verriegelungsbolzens sperrt und die Waffe sichert.

Fig. 1 zeigt hier die Position "gesichert", wobei Exzenter (8) durch den Steuerbefehl "entsichern" über Motor (6) mit seiner Motorwelle (7) hier um 180° umschlägt und für Bolzen (9) die Möglichkeit eröffnet, dank seiner konischen Gestaltung aus Falle (3) zu gleiten.

Fig. 1 zeigt ebenfalls nur symbolhaft, wie durch die Elektronik (10), d. h. Mikroprozessor, Verstärker u. dgl. mittels Batterie (11) der Motor gesteuert wird.

Selbstverständlich kann die Fig. 1 nicht alle Details, insbesondere des Sicherungsbolzens (9) und des Exzenters (8) darstellen, wobei insbesondere letzterer in der hier dargestellten Variante nicht in der Lage wäre, auftretende Druckkräfte aufzunehmen.

Fig. 2 zeigt in schematisierter Anordnung den Bolzenverriegelungsmechanismus in einer realisierbaren Art und Weise.

Dabei ist der Sperrbolzen (9') in Falle (3) des hier dargestellten Abzugsbolzen (2) gelagert. Diese Position ist gleichzeitig durch Federelement (4) gesichert. Das Ausfahren des Sperrbolzens (9') erfolgt durch Bolzenelement (22), das entsprechend seiner Formgebung in Falle (3) ruht und gemäß seiner konischen Gestaltung durch Drehung des Abzugsbolzens (2) aus dieser gleitet.

Der große Vorteil dieser Anordnung besteht jedoch darin, daß während dieser Ausgleitbewegung Sperrbolzen (9') durch eine hier nicht dargestellt Ausfräsung des Abzugsbolzens (2) über die Verbindung (23, 24) federbelastet (25) verfährt, wobei Feder (25) gegenüber Feder (4) naturgemäß stärker ausgelegt ist.

Im Zustand "gesichert" liegt nun Bolzenanteil (23) des Sperriegelmitnahmeelementes auf dem hier dargestellten Exzenter (8) auf, wobei auch noch so starke Drehmomente, die auf Abzugsbolzen (2) wirken, durch die Feder (25) abgepuffert werden, so daß einerseits die Verriegelung über Sperrbolzen (9') weiter gewährleistet ist und wobei andererseits der Exzenter (8) durch die Federkraft (25) keinen Schaden nimmt.

Mit der Drehung des Exzenters (8) über die hier schematisch dargestellte Motorwelle (7) o. dgl. findet das Sperriegelmitnahmeelement (23, 24) einen Verfahrweg und nimmt damit Verriegelungsbolzen (9') mit, wodurch die Drehung des hier blockierten Abzugsbolzen (2) durchführbar ist.

Im dargestellten Ausführungsbeispiel sind die entsprechenden Riegel- bzw. Bolzenelemente in ihren Führungen (26, 27) verfahrbar angeordnet. Gleichzeitig ist mit der hier dargestellten Variante die Möglichkeit gegeben, den Exzenter (8) in seiner trägen Masse so zu minimieren, daß die Motorbelastung ebenfalls ein Minimum erreicht, womit gewährleistet ist, daß die Stromversorgung über Batterie der elektronischen Sicherungsvorrichtung der Waffe für einen langen Zeitraum seine Funktion garantiert. Bei Stromabfall sind LED's vorgesehen, die auf einen baldigen Batteriewechsel vorbereiten.

Fig. 3 zeigt in schematisierter Anordnung in der Art eines Blockschaltbildes eine Möglichkeit einer induktiven Kommunikationskopplung, der Übersicht wegen nur in einer Richtung.

Dabei ist der Abstand (12) zwischen der Kommunikationsvorrichtung (13) und der selektiert dargestellten Schußwaffenelektronik (14) wesentlich verkleinert dargestellt, indem hier frequenzmodulierte Signale durchaus über Strecken von 10 bis 20 cm übertragbar sind. Dabei besteht die Kommunikationsvorrichtung (13) aus einem Chip (14), einem Taktgenerator (15) sowie aus einer induktiven Einheit (16), Elemente, die selbstverständlich bei einer echten Kommunikation auch in der Waffe vorhanden sind. Im Bereich der Waffenelektronik (28) ist besonders Demodulator (18) neben Chip (19) hervorzuheben. Bei echter Kommunikation benötigt auch die Kommunikationseinheit (13) einen Demodulator (18).

Die bevorzugt frequenzmodulierte Information, die über Chip (14) erzeugt wird, wird von der induktiven Einheit (17) aufgenommen und im Demodulator (18) entschlüsselt, der seine Information an Chip (19) weiterleitet. Die Stromversorgung zwischen der Kommunikationseinheit (13) und der Waffenelektronik (28) wird hier durch die Batterien (20, 21) symbolhaft dargestellt. Es muß eindeutig darauf hingewiesen werden, daß Fig. 3 lediglich einen Detailausschnitt der Gesamtelektronik darstellt, die sich darauf beschränkt, nur den Kommunikationsvorgang zwischen Kommunikationsvorrichtung (13) und der Waffe herzustellen.

Wie letztendlich die Anordnung der einzelnen Baukomponenten realisiert wird, kann hier nicht zur Darstellung gebracht werden, da es hierfür je nach Waffentyp die unterschiedlichsten Möglichkeiten gibt, ebenso wie z. B. in Fig. 1 im wesentlichen nur eine Variante dargestellt ist, den Funktionsmechanismus der Waffe zu blockieren.

Patentansprüche

1. Verfahren zur legitimierten Betätigung von Schußwaffen, dadurch gekennzeichnet, daß die Waffe mit einer elektronisch-mechanischen Sperre versehen ist, indem bevorzugt eine zeitgesteuerte PIN die Waffe in ihrer Funktion legitimiert, die in diesem Zustand z. B. mittels einer Kommunikationskopplung mit einer Vorrichtung kommuniziert, in deren Grenzdistanz zur Waffe deren elektro-mechanische Entsicherung aufrechterhalten wird.

2. Verfahren zur legitimierten Betätigung von Schußwaffen nach Anspruch 1, dadurch gekennzeichnet, daß die Kommunikationskopplung bevorzugt induktiv frequenz- und/oder amplitudenmoduliert durchgeführt wird.

3. Verfahren zur legitimierten Betätigung von Schußwaffen nach Anspruch 1, 2, dadurch gekennzeichnet, daß bevorzugt schockgesicherte Logik-Speicher-Mikorprozessorchips die Kommunikation übernehmen.

4. Verfahren nach mindestens einem der Ansprüche 1—3, dadurch gekennzeichnet, daß der Waffenbesitzer zuerst seine Waffe mittels PIN bevorzugt zeitlich begrenzt aktiviert, wobei die PIN über ein Display ablesbar ist, die sich z. B. nach Enterbestätigung bevorzugt unmittelbar aus dem Display löscht, wobei bevorzugt mittels einer Reset-Taste

PR 0138

ET50316

die Legitimationszeit verlängert wird.

5. Verfahren nach mindestens einem der Ansprüche 1—4, dadurch gekennzeichnet, daß bei Überschreiten einer bestimmten Grenzdistanz der Kommunikationselemente der Waffenchip sofort die Waffenmechanik auf die Stellung elektronisch "gesichert" schaltet.

6. Verfahren nach mindestens einem der Ansprüche 1—5, dadurch gekennzeichnet, daß die PIN bevorzugt mit mindestens einer Druckund/oder Sensortaste eingegeben und bestätigt wird.

7. Verfahren nach mindestens einem der Ansprüche 1-6, dadurch gekennzeichnet, daß die Sperrvorrichtung der Waffe an den verschiedensten Elementen und bevorzugt im Griffstück bevorzugt ein- oder mehrfach an- bzw. untergebracht ist, wobei jedoch auch die Funktion des Schlagbolzens u. a. Elemente im Schlitten o. dgl. angesprochen werden.

8. Verfahren nach mindestens einem der Ansprüche 1—7, dadurch gekennzeichnet, daß die Waffe im Einsatz zusätzlich mit ihrer Kommunikationsvorrichtung getragen wird, wobei z. B. die Kommunikationsvorrichtung in einem bestimmten Takt mit der Waffe über die Mikroprozessoren kommuniziert und die Legitimation gewährleistet, wobei die Kommunikation bevorzugt kontinuierlich durch ständigen Codeaustausch erfolgt.

9. Verfahren nach mindestens einem der Ansprüche 1—8, dadurch gekennzeichnet, daß der verwendete Sicherungsbolzen in der Stellung "gesichert" gesperrt in eine Falle eingefahren ist und bei seiner Bewegungsfreigabe durch den Waffen-Mikroprozessor über die Bedienerkraft aus der Falle entfernt wird, wobei beim ständigen Kommunikationsaustausch mit der Kommunikationsvorrichtung die Waffe elektronisch entsichert ist.

10. Verfahren nach mindestens einem der Ansprüche 1—9, dadurch gekennzeichnet, daß zumindest für die Programmierung zusätzlich Solarenergie verwendet wird, während die mechanische Umsetzung bevorzugt über Batterieund/oder Akkustrom erfolgt.

11. Verfahren nach mindestens einem der Ansprüche 1—10, dadurch gekennzeichnet, daß bevorzugt alle Mikroprozessorchips durch einen zweiten und bevorzugt gleichen Chip insofern abgesichert sind, daß jeder Ersatzchip bei Versagen des ersten dessen Funktion übernimmt, was für die Waffe und für die Kommunikationsvorrichtung gilt.

12. Verfahren nach mindestens einem der Ansprüche 1—11, dadurch gekennzeichnet, daß die Waffennummer und die PIN registriert werden.

13. Verfahren nach mindestens einem der Ansprüche 1—12, dadurch gekennzeichnet, daß bei entwendeter Waffe die PIN nur durch ein Verzögerungsglied mit zunehmender Dauer zwischen den Fehlversuchen aktivierbar ist, so daß ein Auslesen der PIN über einen PC o. dgl. vermieden wird.

14. Verfahren nach mindestens einem der Ansprüche 1—13, dadurch gekennzeichnet, daß der Kommunikationsverlust zwischen Waffe und Kommunikationsvorrichtung die PIN automatisch abfällt und die Waffe elektronisch-mechanisch gesichert wird.

15. Verfahren nach mindestens einem der Ansprüche 1—14, dadurch gekennzeichnet, daß die Waffe und elektronische Zusatzelemente wie Zielvorrichtungen o. dgl. über die PIN aktiviert und bevorzugt über die Kommunikationsvorrichtung in Funktion gehalten bzw. gebracht wird/werden.

16. Verfahren nach mindestens einem der Ansprüche 1—15, dadurch gekennzeichnet, daß die PIN-programmierte Waffe mit dem Greifen durch die Schußhand mit aktiver Kommunikationsvorrichtung z. B. am Handgelenk elektronisch entsichert wird.

17. Verfahren nach mindestens einem der Ansprüche 1—16, dadurch gekennzeichnet, daß der Waffen-Chip bevorzugt über eine programmierte Chip-Karte zeitlich bevorzugt aktiviert und damit die Waffe legitimiert wird.

18. Bausatz zur legitimierten Betätigung von Schußwaffen nach Anspruch 1, dadurch gekennzeichnet, daß der Bausatz aus einer geführten (26, 27) Sperrvorrichtung (9, 9', 23, 24, ...) mit Sperrbolzen (9, 9') o. dgl. besteht, die durch mindestens einen legitimierten Mikroprozessor-Chip (19) in ihrer Anordnung bzw. Funktion programmiert Anwendung findet, wobei eine Kommunikationseinheit (13) geeignet ist, ständig z. B. über die Schußhand bevorzugt über einen induktiven Codeaustausch, die Waffe zusätzlich derart zu sichern, daß bei Kommunikationsabbruch der/die Waffen-Mikroprozessoren geeignet sind, die Waffe über den Bolzenmechanismus (9, 9', 23, 24, ...) zu sperren.

19. Bausatz zur legitimierten Betätigung von Schußwaffen nach Anspruch 18, dadurch gekennzeichnet, daß die Sperrvorrichtung (9, 9', 23, 24, ...) bevorzugt aus einem federgespannten (4) Sperriegel (9, 9') besteht, der geführt (26, 27) ist und in der Stellung "gesichert" in einer Falle (3) eines bevorzugt drehbaren Bolzens (2) o. dgl. ruht, wobei z. B. ein Mikromotor (6) zur Freigabe des Sperriegels (9, 9') dient.

20. Bausatz zur legitimierten Betätigung von Schußwaffen nach Anspruch 18, 19, dadurch gekennzeichnet, daß der Mikromotor (6) über mindestens einen Mikroprozessor (19) steuerbar ist, wobei dieser z. B. über ein induktives Kommunikationselement (13) mit eigenem Mikroprozessor-Chip (14) kommuniziert, indem z. B. mindestens ein frequenzmoduliertes Signal ständig zwischen den Kommunikationspartnern (13, ...) austauschbar ist, wobei der Waffen-Mikroprozessor (19) geeignet ist, die entsichernde, d. h. PIN-programmierte Waffe, automatisch in die Stellung "gesichert" zu bringen, wenn die Kommunikationsvorrichtung (13) einen bestimmten Distanz-Grenzwert zur Waffe überschritten hat.

21. Bausatz nach mindestens einem der Ansprüche 18—20, dadurch gekennzeichnet, daß die Kommunikationsvorrichtung (13) bevorzugt induktiv über einen Taktgenerator (15) bevorzugt frequenzmoduliert bei PIN-legitimierter Waffe schnell getaktet einen Demodulaitor (18) des/der Waffen-Chips (19) anspricht und damit die Waffe elektronisch/mechanisch entsichert hält und daß bevorzugt diese Kommunikationsweise auch von der Waffe zur Kommunikationsvorrichtung erfolgt, die beide so ständig z. B. eine Rückantwort vom anderen (13, ...) fordern.

22. Bausatz nach mindestens einem der Ansprüche 18—21, dadurch gekennzeichnet, daß die Kommunikationsvorrichtung (13) bevorzugt am Handgelenk der Schußhand tragbar ist.

23. Bausatz nach mindestens einem der Ansprüche 18—22, dadurch gekennzeichnet, daß die Waffe ein

PR 0139

ET50317

Display für die PIN aufweist, die nach Legitimation bevorzugt unmittelbar löschbar ist.

24. Bausatz nach mindestens einem der Ansprüche 18—23, dadurch gekennzeichnet, daß die elektronischen Bauelemente bevorzugt im Griffstück untergebracht sind.

25. Bausatz nach mindestens einem der Ansprüche 18—24, dadurch gekennzeichnet, daß die Stromversorgung über Batteriestrom (22, 21) (z. B. Knopfzellen) und/oder Solarbatterien und/oder Akkustrom erfolgt.

26. Bausatz nach mindestens einem der Ansprüche 18—25, dadurch gekennzeichnet, daß die PIN über mindestens eine Sensortaste o. dgl. programmierbar ist und daß dabei über die Möglichkeit des schnellen und gesteuerten Vor- bzw. Rückdaufs in kurzer Zeit die Programmierung abgeschlossen und z. B. durch eine Entertaste bestätigbar ist.

27. Bausatz nach mindestens einem der Ansprüche 18—26, dadurch gekennzeichnet, daß die Kommunikationsvorrichtung (13) über eine Aktivierungstaste einschaltbar ist, wobei der Mikroprozessor-Chip (14) und der Taktgenerator (15) bevorzugt über Batteriestrom (20) bedienbar und die Grenzwertentfernung einstellbar ist.

28. Bausatz nach mindestens einem der Ansprüche 18—21, dadurch gekennzeichnet, daß sowohl die Kommunikationsvorrichtung (13), als auch die Waffe bevorzugt über jeweils mindestens eine LED den Ladezustand der Batterie/n und/oder Akkus erkennbar machen.

29. Bausatz nach mindestens einem der Ansprüche 18—28, dadurch gekennzeichnet, daß die Waffe und die Kommunikationsvorrichtung (13) bevorzugt jeweils zwei gleichartige Mikroprozessoren (14, 19) besitzen, wobei jeweils der eine in standby-Funktion ruht.

30. Bausatz nach mindestens einem der Ansprüche 18—29, dadurch gekennzeichnet, daß sowohl die Waffe, als auch die Kommunikationsvorrichtung (13) jeweils eine Batterie (20, 21) in standby-Funktion besitzen, wobei die Zuschaltung der Ersatzbatterie über den jeweiligen Chip (14, 19) regelbar ist.

31. Bausatz nach mindestens einem der Ansprüche 18—30, dadurch gekennzeichnet, daß sowohl die Waffe, als auch die Kommunikationsvorrichtung (13) mindestens ein "Fenster" aufweisen, das den Informationsaustausch ermöglicht.

32. Bausatz nach mindestens einem der Ansprüche 18—31, dadurch gekennzeichnet, daß die PIN bevorzugt eine mehrstellige Zahl und/oder Ziffern darstellt, die über die PIN-Programmierung sequentiell, ggf. mit Sprungbefehlen (1000, 2000, ...) aus einem Zahlen- und/oder Ziffernspeicher aufrufbar ist/sind.

33. Bausatz nach mindestens einem der Ansprüche 18—32, dadurch gekennzeichnet, daß die PIN-Programmierungssensor- und/oder Druckknopf gesteuert in ihrer Programmiergeschwindigkeit vom Druck auf den Sensor und/oder ggf. durch mindestens einen mehrstufigen Druckknopf abhängt.

34. Bausatz nach mindestens einem der Ansprüche 18—33, dadurch gekennzeichnet, daß die Waffe zur PIN-Eingabe ein alpha-numerisches Tastenfeld besitzt.

35. Bausatz nach mindestens einem der Ansprüche 18—34, dadurch gekennzeichnet, daß der/die Waffenchip/s (19) über eine programmierte Chip-Karte anstelle einer PIN aktivierbar ist/sind.

36. Bausatz nach mindestens einem der Ansprüche 18—35, dadurch gekennzeichnet, daß die Waffe einen Einführschacht für die Chip-Karte und eine Schnittstelle zum Waffen-Mikroprozessor (19) aufweist.

37. Bausatz nach mindestens einem der Ansprüche 18—36, dadurch gekennzeichnet, daß der Waffen-Chip (19) so ausgelegt ist, daß er geeignet ist, nach Legitimation auch andere elektronische Zusatzelemente wie Licht- oder Laserzielvorrichtungen zu aktivieren bzw. zu sperren.

38. Bausatz nach mindestens einem der Ansprüche 18—37, dadurch gekennzeichnet, daß über das Holster die Kommunikation zwischen Vorrichtung (13) und der Waffe unterbrochen ist.

39. Bausatz nach mindestens einem der Ansprüche 18—38, dadurch gekennzeichnet, daß über einen Auslöseknopf o. dgl. die Waffe nach PIN-Legitimation entsichert ist, wobei die Waffe sofort sperrbar ist, wenn dieser nicht mehr aktiviert ist.

40. Bausatz nach mindestens einem der Ansprüche 18—39, dadurch gekennzeichnet, daß die Kommunikationsvorrichtung geeignet ist, über andere Funktionselemente und Verfahren zur Informationsübertragung die Waffe nach Entwendung zu sichern.

41. Bausatz nach mindestens einem der Ansprüche 18—40, dadurch gekennzeichnet, daß die Kommunikationsvorrichtung (13) geeignet ist, erst in der Schußhand durch z. B. induktiven Befehl, über einen Waffensensor und/oder durch zusätzliche Aktivierung in Funktion zu treten.

42. Bausatz nach mindestens einem der Ansprüche 18—41, dadurch gekennzeichnet, daß bei echter Kommunikation natürlich auch die Waffe als Informationssender dient und die entsprechenden Elemente wie Taktgenerator (15), Demodulator (18) u. dgl. aufweist.

43. Bausatz nach mindestens einem der Ansprüche 18—42, dadurch gekennzeichnet, daß die Informationsübermittlung z. B. über Funk, Infrarot o. dgl. durchführbar ist.

44. Bausatz nach mindestens einem der Ansprüche 18—43, dadurch gekennzeichnet, daß die Kommunikationsvorrichtung z. B. an einem Gürtel oder einer anderen Körperstelle tragbar ist, wobei die Grenzdistanz festzulegen ist.

45. Bausatz nach mindestens einem der Ansprüche 18—44, dadurch gekennzeichnet, daß statt eines Mikromotors (6) mit Exzenter (8) und Bolzen (9, 9') ein bistabiles Verriegelungselement Verwendung findet.

46. Bausatz nach mindestens einem der Ansprüche 18—45, dadurch gekennzeichnet, daß das bistabile Verriegelungselement bevorzugt aus einer Spule und einem Kern mit Permanentmagneten besteht, wobei eine Seite geeignet ist, den Verfahrweg eines Verriegelungsbolzens in der Programmierung "gesichert" zu sperren.

47. Bausatz nach mindestens einem der Ansprüche 18—46, dadurch gekennzeichnet, daß die elektronisch-elektrischen Bestandteile der Kommunikationsvorrichtung (13) und der Waffe bevorzugt gegen Stoß und/oder Korrosion ebenso wie gegen Wasser geschützt sind.

48. Bausatz nach mindestens einem der Ansprüche 18—47, dadurch gekennzeichnet, daß z. B. die

PR 0140

ET50318

- Leerseite -

PR 0141

ET50319

Nummer: DE 43 03 339 A1
Int. Cl.⁵: F 41 A 17/63
Offenlegungstag: 30. Juni 1994

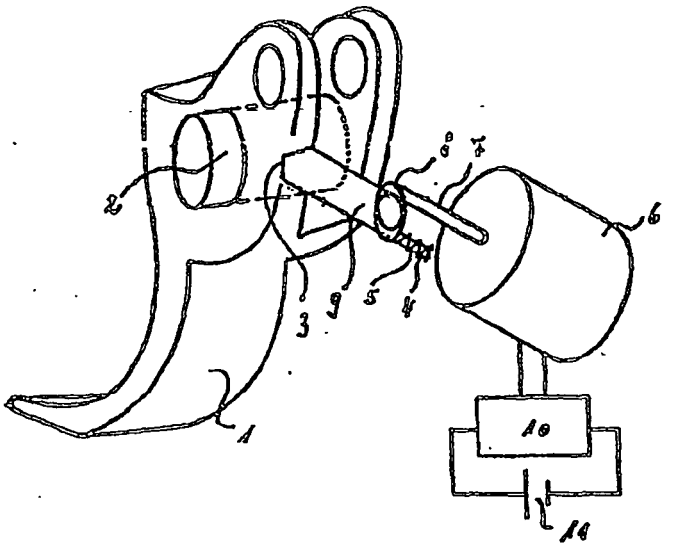

Fig. 1

408 026/402

PR 0142

ET50320

Nummer: DE 40 08 308 A1
Int. Cl.⁵: F41A 17/06
Offenlegungstag: 30. Juni 1994

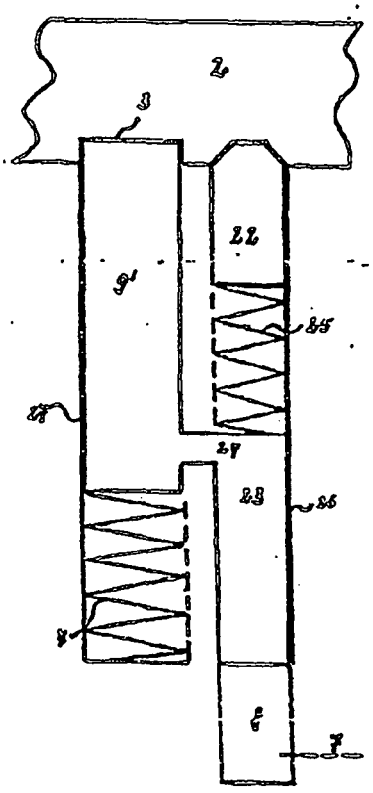

Fig. 2

408 028/402

Nummer: DE 43 39 133 A1
Int. Cl.6: F 41 A 17/06
Offenlegungstag: 23. Juni 1994

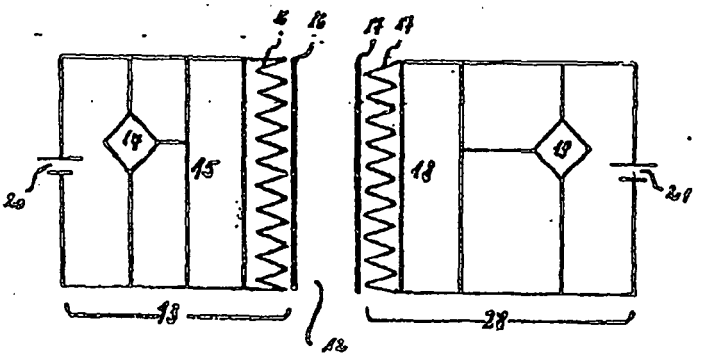

Fig. 3

408 028/402

DE 4303333 A1
JUN 1994

★SCHR/ Q79 94-219188/27 ★DE 4303333-A1

Legitimate fire arm actuation system - has electronic and mechanical lock with time controlled PIN for authorising weapon operation

SCHREIBER H 92.12.24 92DE-4244239

T01 W07 (94.06.30) F41A 17/06

93.02.05 93DE-4303333

The fire-arm has an electronically unlocking bolt mechanism (6,7,8,9) actuated by the weapon microprocessor (19). This puts the weapon into an electronically locked or an unlocked position. The weapon stays in operational stand-by which is guaranteed by a read-in PIN. It is in constant connection with a communication unit (18) which is preferably mounted on the handle.

The communication unit communicates with the weapon in short time intervals or continually via a frequency modulated signal. The electronic locking mechanism automatically respond when the communication device is more than about 10 or 20 centimetres from the weapon.

ADVANTAGE - Allows weapon to be operated only by person with valid PIN. (9pp Dwg.No.1/3)

N94-173211

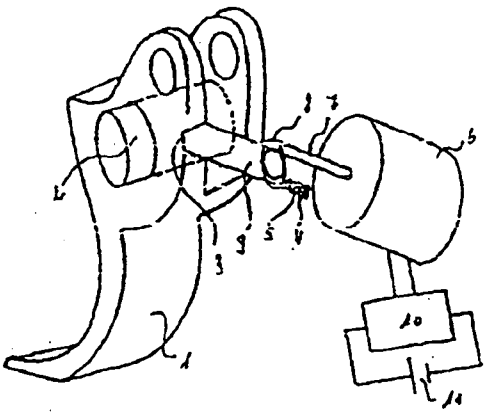

DERWENT

PR 0146

ET50324

US005417001A

United States Patent [19]

Rousseau

[11] Patent Number: 5,417,001

[45] Date of Patent: May 23, 1995

[54] FIRING MECHANISM FOR FIRE ARMS

[75] Inventor: Joseph F. N. Rousseau, Mountain Green, Utah

[73] Assignee: Browning SA, Herstal, Belgium

[21] Appl. No.: 274,166

[22] Filed: Jul. 14, 1994

[30] Foreign Application Priority Data

Jul. 14, 1993 [BE] Belgium 09300727

[51] Int. Cl.[6] F41A 17/30; F41A 17/56; F41A 17/74

[52] U.S. Cl. 42/70.08; 42/69.03; 42/70.01

[58] Field of Search 42/70.08, 70.06, 70.05, 42/70.04, 70.01, 69.03

[56] References Cited

U.S. PATENT DOCUMENTS

1,376,165	4/1921	Rosebush	42/70.01
3,903,631	9/1975	Vesaman	42/70.08
4,151,670	5/1979	Rath	42/70.06
4,272,957	12/1983	Chestnut et al.	42/75.02
5,067,266	11/1991	Findlay	42/70.08
5,068,990	12/1991	Marzocco	42/70.04
5,149,898	9/1992	Chestnut	42/70.04
5,225,611	7/1993	Scott	42/70.08
5,274,939	1/1994	Scaramucci et al.	42/69.03

FOREIGN PATENT DOCUMENTS

0428292	5/1991	European Pat. Off. .
1044264	11/1953	France .
345118	12/1921	Germany .
664737	1/1952	United Kingdom .

Primary Examiner—David Brown
Attorney, Agent, or Firm—Bacon & Thomas

[57] ABSTRACT

Firing mechanism for fire arms, includes a hammer (5) revolving between a "cocked" position and a "tumbled" position which makes contact with the striker (4), a tumbler (8) which can retain the hammer (5) in the cocked position, a trigger (13) which controls the tumbler (8), an assembly (20) to make the hammer (5) revolve from its cocked position towards the striker (4) of the arm when the hammer (5) is released by the tumbler (8), and a security device containing a bolt element (27) which can be manually locked and which can lock the trigger (13). The bolt element (27), in the security position, not only cooperates with the trigger (13), but simultaneously with the assembly (20) to make the hammer revolve in order to prevent the hammer (5) from knocking against the striker (4) as long as the bolt element (27) is in its security position.

9 Claims, 4 Drawing Sheets

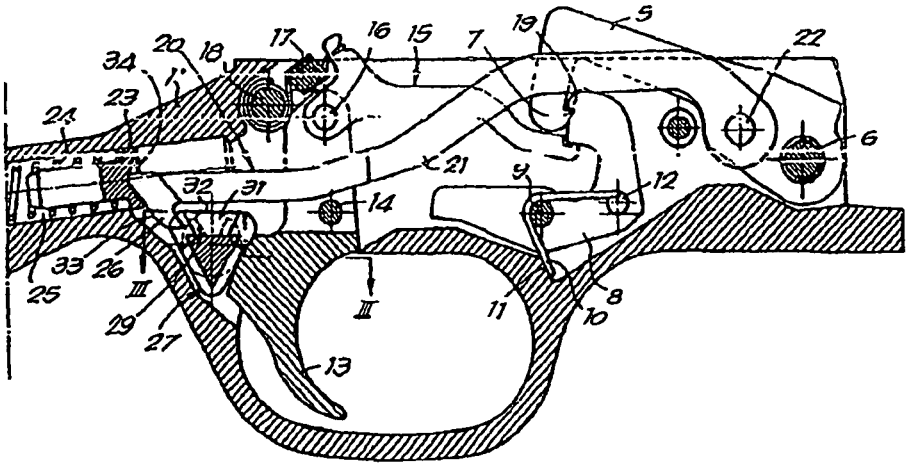

PR 0147

ET50325

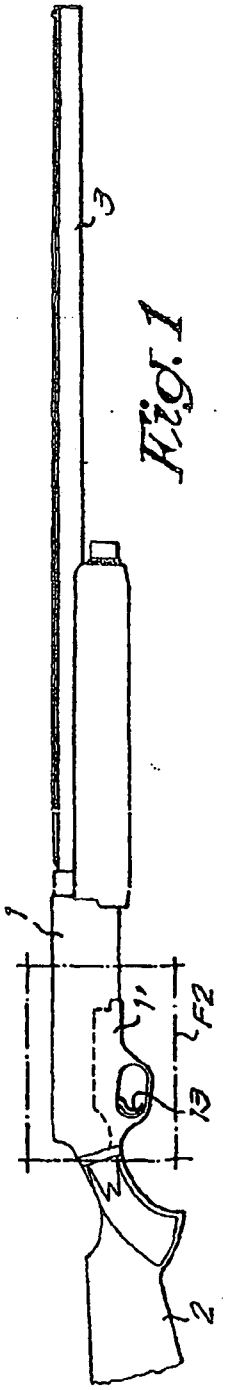

Fig. 1

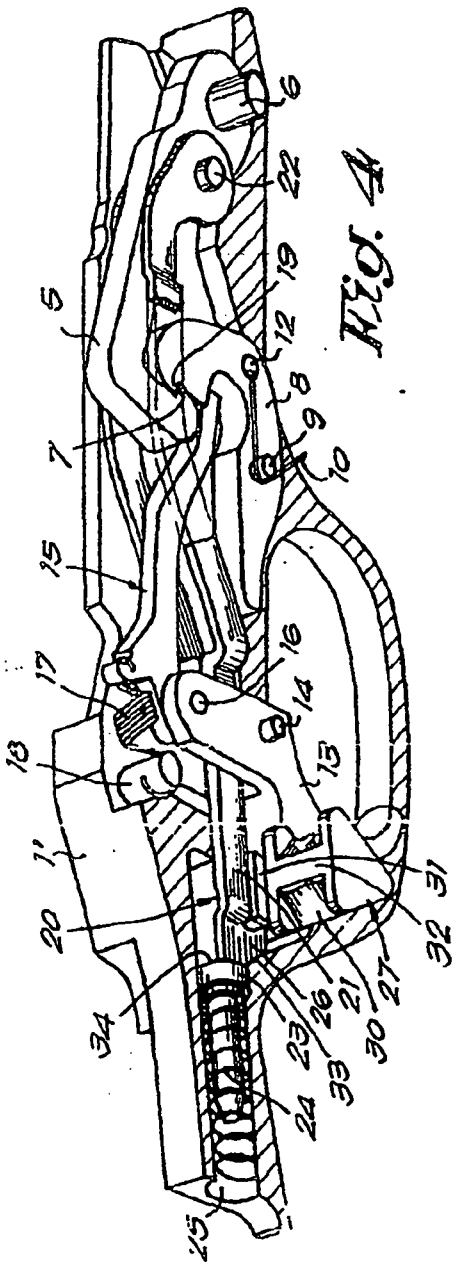

Fig. 4

PR 0148

ET50326

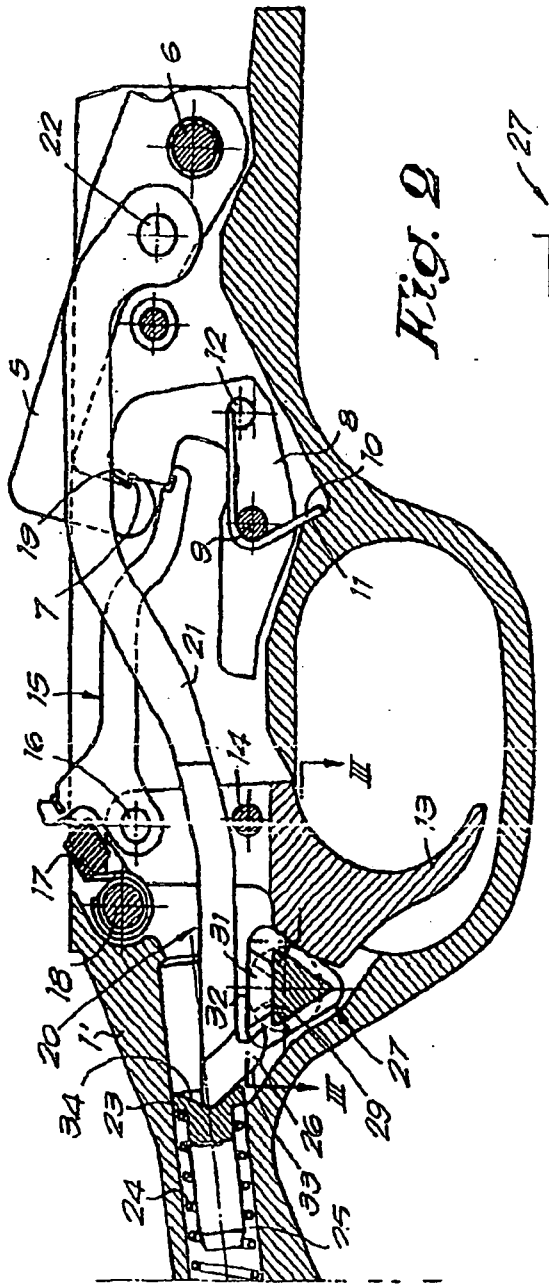

Fig. 2

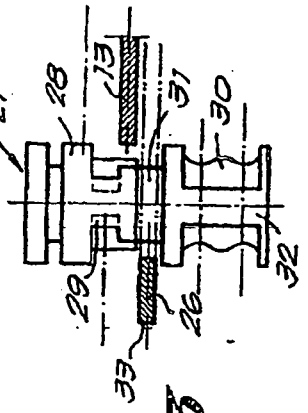

Fig. 3

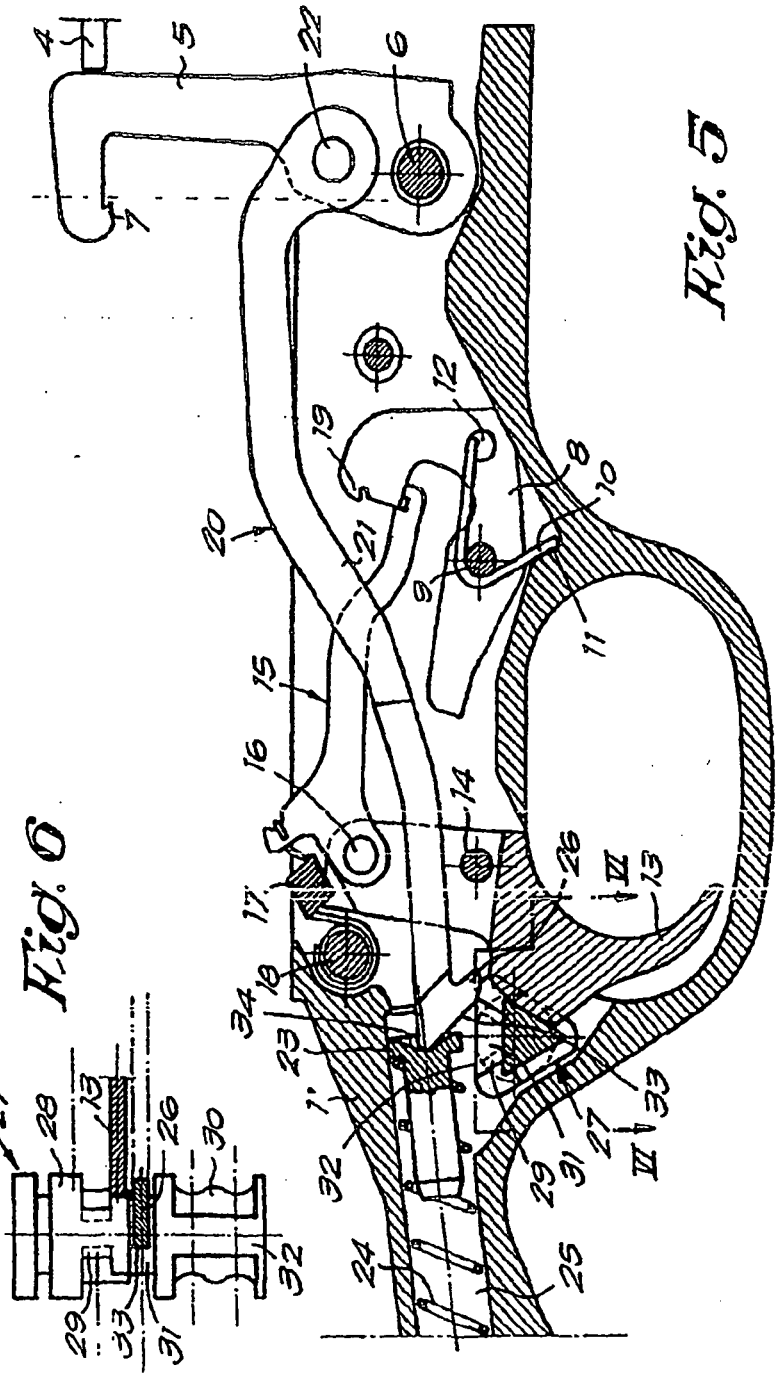

Fig. 5

Fig. 6

PR 0150

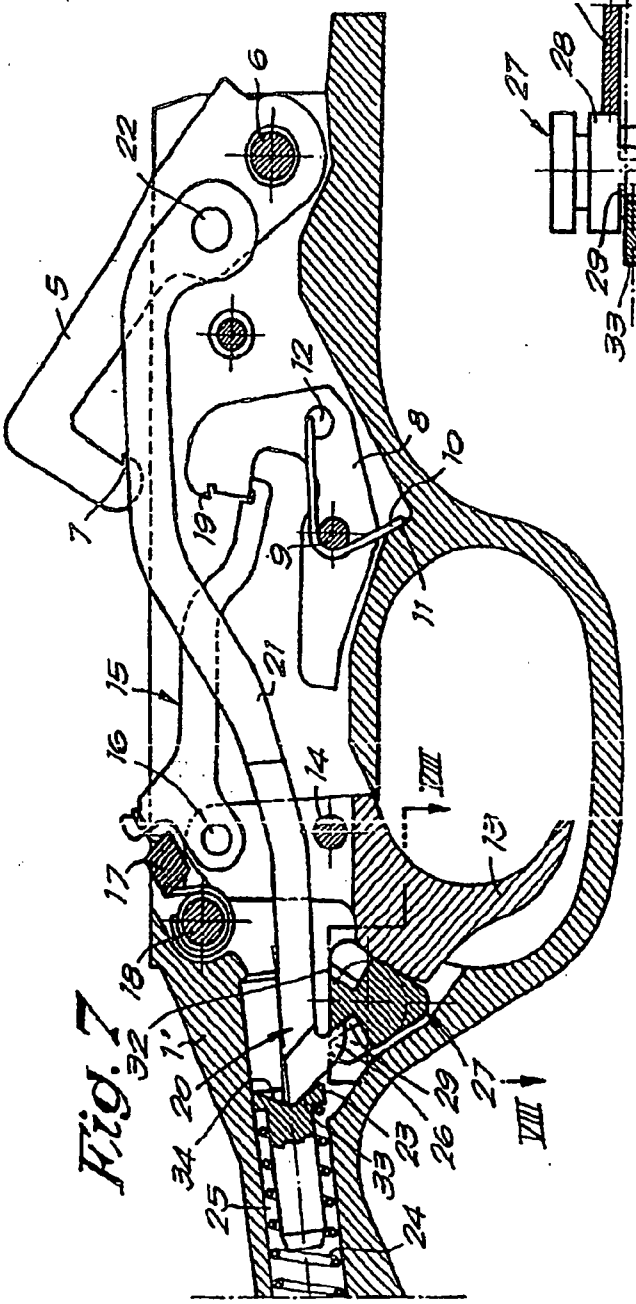

Fig. 7

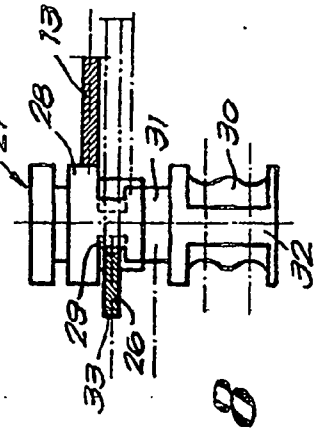

Fig. 8

PR 0151

ET50329

FIRING MECHANISM FOR FIRE ARMS

BACKGROUND OF THE INVENTION

The invention concerns a firing mechanism for fire arms, whereby such mechanism contains a hammer revolving between a "cocked" position and a "tumbled" position which makes contact with the striker, a tumbler which can retain the hammer in the cocked position, an actual trigger which controls the tumbler, means to make the hammer revolve from its cocked position towards the striker of the arm when the hammer is released by the tumbler, and a security device containing a breech bolt element which can be manually locked and which can lock the trigger and the hammer.

It is generally known to provide fire arms with a bolt, which can be manually locked, for the trigger or with an element connected thereto in order to prevent the involuntary release of the hammer when the arm is cocked. It is not excluded, however, in particular when the arm is handled in a ruthless manner, for example when it drops, that the hammer can hit the striker although the security device is locked, i.e. in its security position. It is indeed possible that, as a result of a shock, the tumbler revolves involuntarily or breaks, or that the part of the hammer working in conjunction with the tumbler breaks.

SUMMARY OF THE INVENTION

The invention aims to remedy this disadvantage and to provide a firing mechanism with an extra security preventing without fail that the hammer makes contact with the striker as long as the security device is locked.

According to the invention, this aim is reached as the bolt element, in its security position, not only cooperates with the trigger, but simultaneously with the means to make the hammer revolve in order to prevent the hammer from knocking against the striker as long as the bolt element is in said position.

According to a particular embodiment of the invention, the bolt element can be moved in a direction parallel to the revolving axis of the hammer and contains a part cooperating in the security position with the trigger, and another part cooperating in the same position with the means to make the hammer revolve.

The means to make the hammer revolve may contain a rod of which one end is fixed in a revolving manner to the hammer, at a distance from its revolving axis, and a button pushing the other end of the rod, whereby this other end is provided with a hook which can work in conjunction with the corresponding part of the bolt element.

BRIEF DESCRIPTION OF THE DRAWINGS

In order to better explain the characteristics of the invention, a preferred embodiment is described hereafter by way of example only and without being limitative in any way, with reference to the accompanying drawings, where:

FIG. 1 represents a gun with an incorporated firing mechanism according to the invention;

FIG. 2 shows a longitudinal section of the part indicated by F2 in FIG. 1, a part which is generally called the "trigger guard", to a larger scale and with the firing mechanism in the cocked position;

FIG. 3 represents a section according to line III—III in FIG. 2;

FIG. 4 represents a view in perspective of the part of the gun represented in FIG. 2;

FIG. 5 represents a section similar to that in FIG. 2, but with the firing mechanism in the firing position and consequently the hammer in the tumbled position;

FIG. 6 represents a section according to line VI—VI of FIG. 5;

FIG. 7 represents a section similar to those in FIGS. 2 and 6, but in the case where the tumbler accidentally no longer retains the hammer in the cocked position whereas the security device remains in the security position;

FIG. 8 represents a section according to line XIII—XIII of FIG. 7.

DETAILED DESCRIPTION OF THE PREFERRED EMBODIMENT

The gun according to FIG. 1 contains, in a known manner, a casing 1 with the trigger guard 1', a grip 2 mounted on an end on the casing, a barrel 3, mounted on the other end of the casing 1 and, inside the casing 1, a striker 4 (see FIG. 5), a loading mechanism and a firing mechanism.

The firing mechanism contains, also in a known manner, a hammer 5 mounted in a revolving manner on the trigger guard 1' around a transversal axis 6 between a so-called "cocked" position as represented in FIGS. 2 and 4, and a so-called "tumbled" position as represented in FIG. 5, in which the hammer 5 knocks against the striker 4. This striker 4 is situated in front of the hammer 5, i.e. on the side of the barrel 3, in tumbled position. The part of the hammer 5 away from the axis 6 is folded back as seen in this position and forms a nozzle 7 at the end.

The firing device also contains an L-shaped tumbler 8, mounted in a revolving manner in the trigger guard 1' by means of an axis 9 and which can retain the hammer 5 in its cocked position. This tumbler 8 is retained in its cocked position, i.e. the position represented in FIG. 2 in which it retains the hammer 5, by means of a spring 10 under tension surrounding the axis 9 and resting against a part 11 of the trigger guard 1' on the one hand and inserted in a hole 12 provided in the tumbler 8 on the other hand.

An actual trigger 13 is mounted in a revolving manner in the trigger guard 1' by means of an axis 14 and controls the tumbler by means of a separator 15.

The separator 15 is mounted in a rotating manner between the two legs of the upper fork-shaped end of the trigger 13 by means of an axis 16. The axes 9, 14 and 16 are parallel to the axis 6 of the hammer 5. A spring 17 fixed on the one hand to a support 18 solid with the trigger guard 1' and on the other hand the separator 15, at a distance from the axis 16, pulls the separator and consequently the upper end of the trigger 13 backwards, i.e. in the normal position as represented in FIGS. 2 and 4.

The separator 15 is prevented from revolving due to the action of the spring 17 as its front end is taken under a backwards folded end of an arm of the tumbler 8.

This end is provided at the back with a notch 19 to which the nozzle 7 of the hammer 5 clings in the cocked position.

The firing mechanism also contains means 20 to [illegible] the hammer 5 revolve as soon [illegible] it is no longer [illegible] by the tumbler 8, whereby [illegible] means 20 [illegible]

PR 0152

ET50330

hammer rod 21, extending between the fork arms of the trigger 13 and fixed at its front end to the hammer 5 in a revolving manner by means of an axis 22 parallel to but situated at a distance from the axis 6, and a button 23 pushed forward by a spring 24 acting on the rear end of the rod 21 and mounted in a pit 25 in the trigger guard 1'.

One of the characteristics of the invention is that the rear end of the rod 21 forms a hook 26.

The firing mechanism further contains a manual security device which is mainly composed of a bolt element 27, situated in a transversal opening in the trigger guard 1' and thus extending parallel to the axes 6, 9, 14 and 16.

It is also characteristic in that this bolt element 27 does not merely contain a part 28 cooperating directly, in the security position, with the trigger 13 in order to prevent it from being set in motion, but also a part 29, cooperating in this position with the hook 26 of the rod 21 in order to retain it. The bolt element 27 can be moved from the security position, as represented in FIGS. 7 and 8, to the shooting position, as represented in FIGS. 2 to 6, by sliding it along its longitudinal axis, by means of a knob 30 formed at one end and protruding at the exterior of the trigger guard 1', on the right side or on the left side depending on the choice of the person using the arm, whereby the symmetry of the bolt element makes it reversible.

The part 28 has a section in the shape of a triangle with its point directed towards the bottom. The adjacent part 29 has the same section but with a notch in the two top corners so that they form a stop notch there in which the hook 26 of the rod 21 clings in the cocked position of the hammer 5 and the security position of the bolt element 27. This stop notch which is designed to receive the hook 26 is flanked on either side with a part of the bolt element 27 which protrudes in relation to the stop notch, such that, when the hook 26 is engaged in this stop notch, the change in position of the bolt element 27 is prevented by the presence of the hook 26. Between the elements 28 and 29 on the one hand and the knob 30 on the other hand, the bolt element 27 contains a part 31 with a triangular section but which is smaller than that of the part 28.

The firing mechanism works as follows:

The loading of the hammer 5 is done in the known manner. In the cocked position, the hammer 5 clings with its nozzle 7 in the notch 19 of the tumbler 8. The latter also retains the separator 15 in the position represented in FIG. 2. The rod 21 then pushes the button 23 against the spring 24.

When the bolt element 27 is in the security position, the part 28 makes contact with the trigger 13 and prevents any movement thereof. At the same time, the hook 26 of the rod 21 is situated behind and in front of the stop notch of the part 29. The hammer 5 can be loaded while the bolt element 27 is in the security position. To this end, when the rod 21 moves backwards, the oblique side 33 of the hook 26 makes the rear part of the rod 21, including the hook 26, go over the top side 32 of the bolt element 27. In doing so, the support of the rod 21 slides slantwise over the side 34 of the button 23. Once the hook 26 of the rod 21 has gone behind the stop notch of the part 29 of the bolt element 27, the action of the spring 24, in combination with the obliqueness of the side 34 of the button 23, draws the rear part of the rod 21, including the hook 26, in a position where the hook 26 faces the stop notch of the part 29 of the bolt element 27. Once it is loaded, the hammer 5 is thus secured until the bolt element 27 is put in shooting position.

After the bolt element 27 has been released and thus has been put in shooting position, which is done by pushing the knob 30 and by moving the bolt element 27 into the position from FIG. 3, the firing mechanism is then in the position as represented in FIGS. 2 to 4. The hammer 5 keeps clinging to the tumbler 8 and nothing happens, but the trigger 13 can be drawn towards the back as it is situated opposite the smallest part 31 of the bolt element 27, and the rod 21 is no longer retained by the bolt element 27 since it is situated above said part 31 and thus next to the stop notch of the part 29.

When the trigger 13 is drawn towards the back, the separator 15 is pushed forward and makes the tumbler 8 tilt forward against the spring 10. The hammer 5 is thus released and, as the hook 26 of the rod 21 is not hindered in any way, it revolves into the tumbled position and knocks against the striker 4 as represented in FIGS. 5 and 6.

In FIGS. 7 and 8, the bolt element 27 is represented in the security position. As already explained, the trigger 13 is then locked and the hook 26 of the rod 21 faces the part 29 of the bolt element 27. If, for any reason whatsoever, for example an involuntary revolving of the tumbler 8 as a result of a shock or a mechanical failure such as the breaking of the hammer 5 or of the tumbler 8, the tumbler 8 no longer retains the hammer 5, the latter is prevented, however, by the rod 21 from knocking against the striker 4, this rod 21 forming an extra security and remaining clung to the bolt element 27.

Due to the fact that the hook 26 of the rod 21 is situated in one of the notches forming the stop notch of the part 29 of the bolt element 27, it is also impossible to put the bolt element 27 into shooting position. The hammer 5 must be reloaded first. If, after said reloading, the bolt element 27 can be put into shooting position, this implies that the untimely release of the hammer 5 was due to a shock and not to a mechanical failure, and the arm can be normally used.

If, however, after the hammer 5 has been reloaded, the bolt element 27 still cannot be put into shooting position, there is a mechanical failure which requires, in order to be repaired, the trigger guard block of the arm to be removed. The arm is then inoperative as long as this repair is not carried out.

The above-described firing mechanism provides more security and prevents the hammer 5 from knocking against the striker 4, even in case of a shock or a mechanical failure, when the bolt element 27 is in the security position.

The hammer 5 can be put from "tumbled" position into "cocked" position irrespective of the position of the security device, i.e. the bolt element 27 ("firing" position or "security" position).

The security device can be put into "shooting" position or "security" position irrespective of the position of the hammer 5 ("tumbled" or "cocked") except when, due to a mechanical failure, the hook 26 maintains contact with the part 29 of the bolt element 27.

It is clear that the above-described example can be modified in many ways while still remaining within the scope of the invention.

In particular, the shape of the bolt element is given as an example only. Other shapes are possible in so far that, in the security position, a part can prevent the movement of the trigger while another part can simultaneously retain the hammer or any other

PR 0153

ET50331

means to make the hammer revolve when it is released from the tumbler.

The connection between the trigger and the tumbler must not necessarily consist of a separator. Indeed, the tumbler can be an element or a part of the trigger.

I claim:

1. A firing mechanism for a fire arm comprising:

a striker member;

a hammer mounted to the fire arm for rotation about an axis between a cocked position wherein said firing mechanism is set to fire and a tumbled position wherein said hammer makes contact with said striker member;

a tumbler movable between a first position wherein said tumbler retains said hammer in the cocked position and a second position wherein said hammer is released;

a trigger assembly for shifting said tumbler between said first and second positions, said trigger assembly including a manually actuatable trigger;

means for rotating said hammer from the cocked position, about said axis, into contact with said striker member when said hammer is released by said tumbler; and

security means shiftably mounted between a shooting position wherein said trigger assembly is permitted to shift said tumbler and a security position wherein said security means prevents shifting of said tumbler through said trigger and prevents said hammer from rotating to said tumbled position, through said rotating means, even in the event said hammer is inadvertently released by said tumbler.

2. The firing mechanism according to claim 1, wherein said trigger assembly further includes a separator member having one end rotatably mounted to said trigger and another end engaged with said tumbler wherein actuation of said trigger member causes said tumbler to move, against the biasing force of a spring, to its second position.

3. The firing mechanism according to claim 1, wherein said security means is shiftable to either of said shooting and security positions irrespective of the position of said hammer except, when said firing mechanism experiences a mechanical failure, said security means is locked in said security position.

4. The firing mechanism according to claim 1, wherein said hammer can be rotated from said tumbled position to said cocked position irrespective of the position of said security means.

5. The firing mechanism according to claim 1, wherein said security means comprises a manually shiftable bolt element.

6. The firing mechanism according to claim 5, wherein said bolt element is shiftable in a direction substantially parallel to said axis, said bolt element including a first part adapted to be engaged with said trigger assembly and a second part adapted to be engaged with said rotating means when said security means is in said security position.

7. The firing mechanism according to claim 6, wherein said rotating means includes a rod and a button member, said rod having one end rotatably secured to said hammer at a location spaced from said axis and a second end provided with a hook engageable with the second part of said bolt element, said button member engaging the second end of said rod and biasing said rod toward said hammer.

8. The firing mechanism according to claim 7, wherein the second part of said bolt element is formed with a stop notch adapted to be engaged by said hook when said security device is in said security position.

9. The firing mechanism according to claim 7, wherein the first part of said bolt element is triangular-shaped in cross-section.

o o o o o

PR 0154

ET50332

US006141896A

United States Patent [19]

Oberst

[11] Patent Number: 6,141,896

[45] Date of Patent: Nov. 7, 2000

[54] LOCKABLE FIREARM SAFETY

[75] Inventor: E. Ernest Oberst, Cheshire, Conn.

[73] Assignee: The Marlin Firearms Company, North Haven, Conn.

[21] Appl. No.: 09/067,487

[22] Filed: Apr. 27, 1998

[51] Int. Cl.[7] F41A 17/22; F41A 17/26; F41A 17/02

[52] U.S. Cl. 42/70.06; 42/70.07; 42/72.08; 42/70.11

[58] Field of Search 42/70.06, 70.08, 42/70.11, 70.07

[56] References Cited

U.S. PATENT DOCUMENTS

2,000,858	5/1935	Maxwell	42/70.06
2,225,583	12/1940	Blizard	42/70.06
3,462,869	8/1969	Wallace	42/70.11
3,553,877	1/1971	Welch et al. .	
3,673,725	7/1972	Cravener .	
3,735,519	5/1973	Fox .	
3,861,069	1/1975	Heurlén .	
3,882,622	5/1975	Perlotto	42/70.11
4,002,101	1/1977	Tellie	89/142
4,136,475	1/1979	Centille	42/70.11
4,457,091	7/1984	Wallerstein	42/70.11
4,467,545	8/1984	Shaw, Jr. .	
4,763,431	8/1988	Allan et al.	42/70.11
4,926,575	5/1990	Pastor	42/70.06
4,987,693	1/1991	Brooks	42/70.11
5,016,378	5/1991	Sain	42/70.06
5,025,582	6/1991	Mote, Sr.	42/70.06
5,062,232	11/1991	Eppler	42/70.11
5,090,148	2/1992	Brooks	42/70.11
5,140,766	8/1992	Brooks	42/70.11
5,229,532	7/1993	Brooks	42/70.11
5,303,495	4/1994	Hartheock	42/70.11
5,335,521	8/1994	Brooks	42/70.11
5,408,777	4/1995	Brooks	42/70.11
5,457,907	10/1995	Brooks	42/70.11
5,502,915	4/1996	Mendelsohn et al.	42/70.11
5,546,690	8/1996	Ciluffo	42/70.11
5,560,134	10/1996	Van Niekerk et al.	42/70.06
5,560,135	10/1996	Ciluffo	42/70.07
5,603,179	2/1997	Adams	42/70.08

FOREIGN PATENT DOCUMENTS

31 16707 A1	11/1982	Germany .	
4300532	7/1994	Germany	42/70.11
586885	4/1977	Switzerland	42/70.06
616326	1/1949	United Kingdom	42/70.06
8203120	9/1982	WIPO	42/70.11

Primary Examiner—Stephen M. Johnson
Attorney, Agent, or Firm—Alix, Yale & Ristas, LLP

[57] ABSTRACT

A lockable firearm safety is incorporated into the bolt mechanism of a safety bolt to selectively block the forward motion of the hammer by either of two means: (a) preventing the trigger from moving rearward which movement would release the hammer permitting it to move forward and strike the firing pin; (b) by directly blocking the hammer from moving forward to strike the firing pin. When the safety bolt is placed in the safety position, the bolt may be locked in the safety position by means of a key. The firearm cannot be discharged until the safety bolt is unlocked and is moved to the fire position.

12 Claims, 7 Drawing Sheets

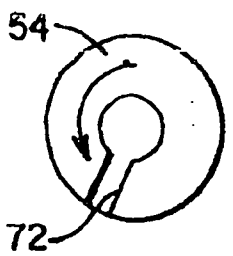

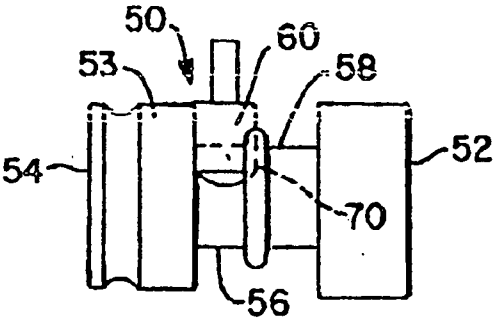

PR 0156

ET50334

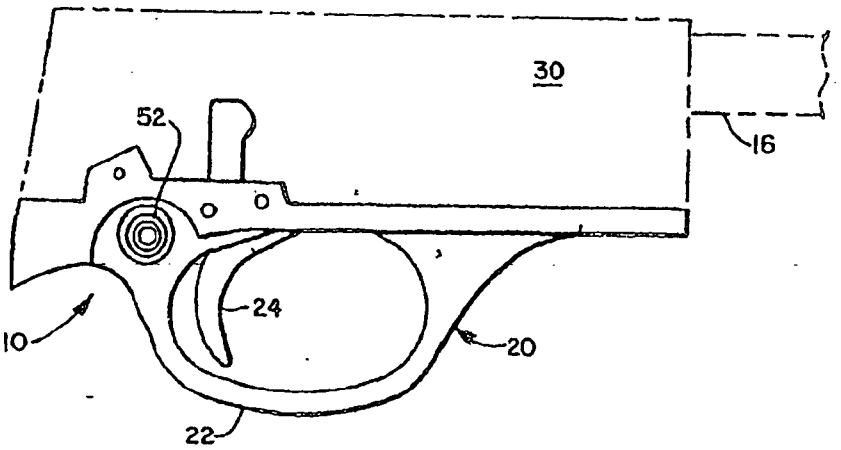

FIG. 1

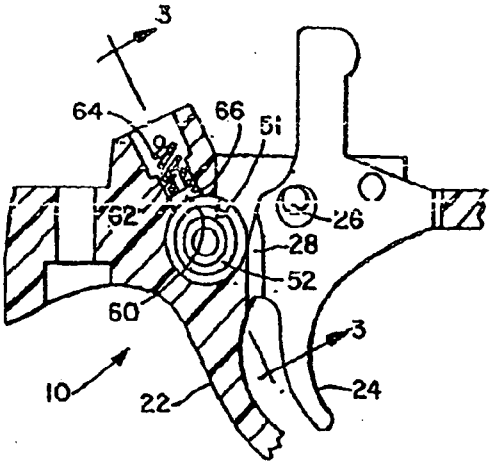

FIG. 2

PR 0157

ET50335

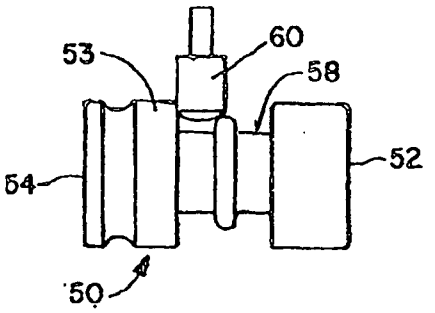

FIG. 3

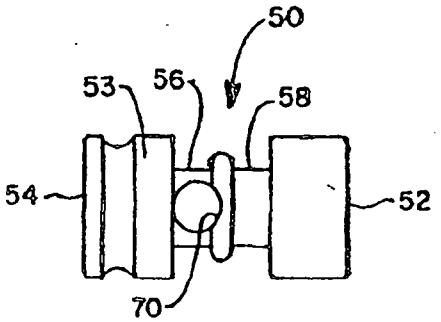

FIG. 4

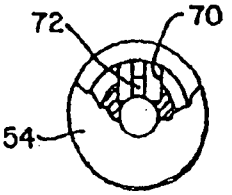

FIG. 6

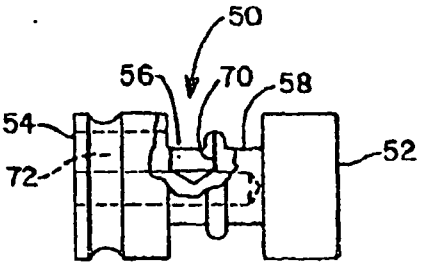

FIG. 5

PR 0158

ET50336

FIG. 7A

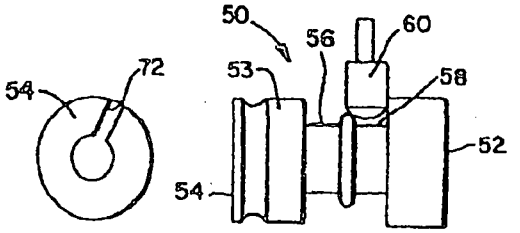

FIG. 7B

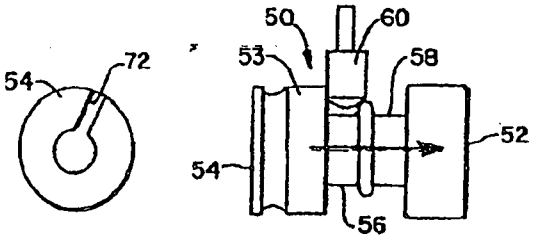

FIG. 7C

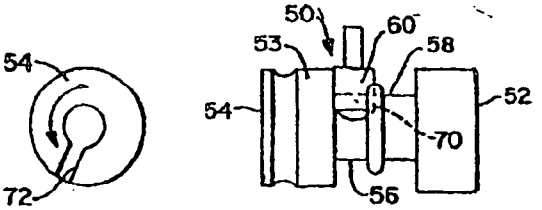

FIG. 7D

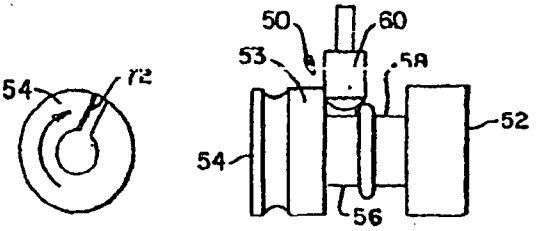

FIG. 7E

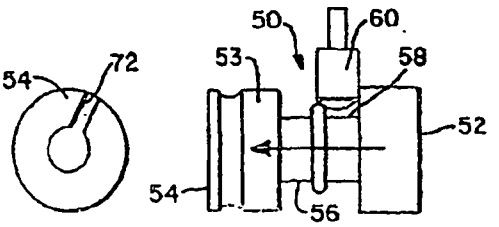

PR 0159

ET50337

FIG. 9

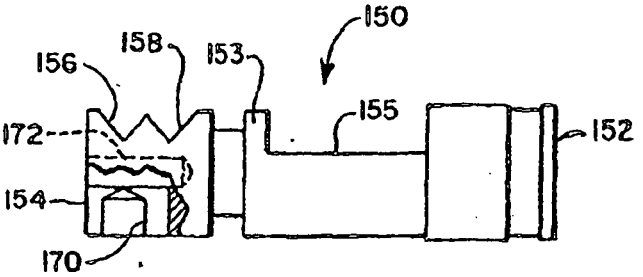

FIG. 8

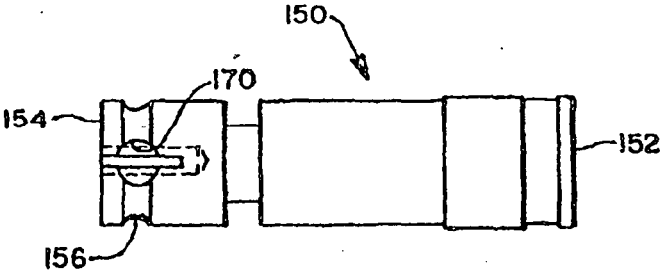

FIG. 10

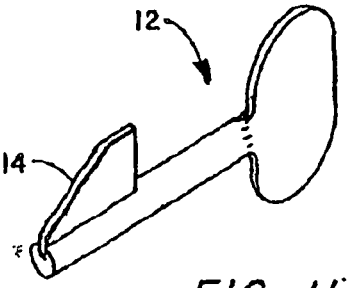

FIG. 11

PR 0160

ET50338

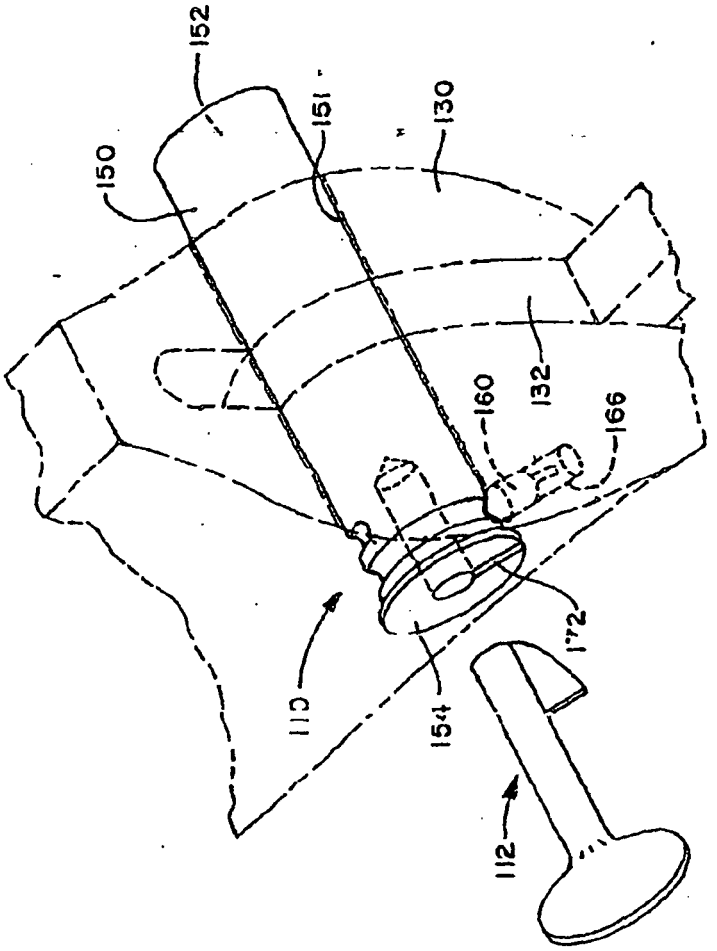

FIG. 12

PR 0162

ET50340

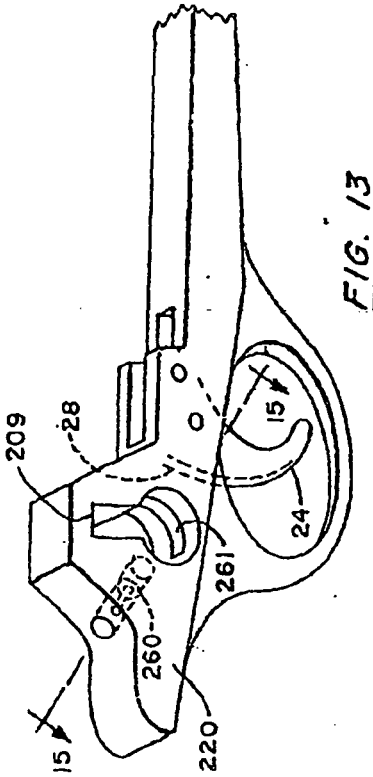

FIG. 13

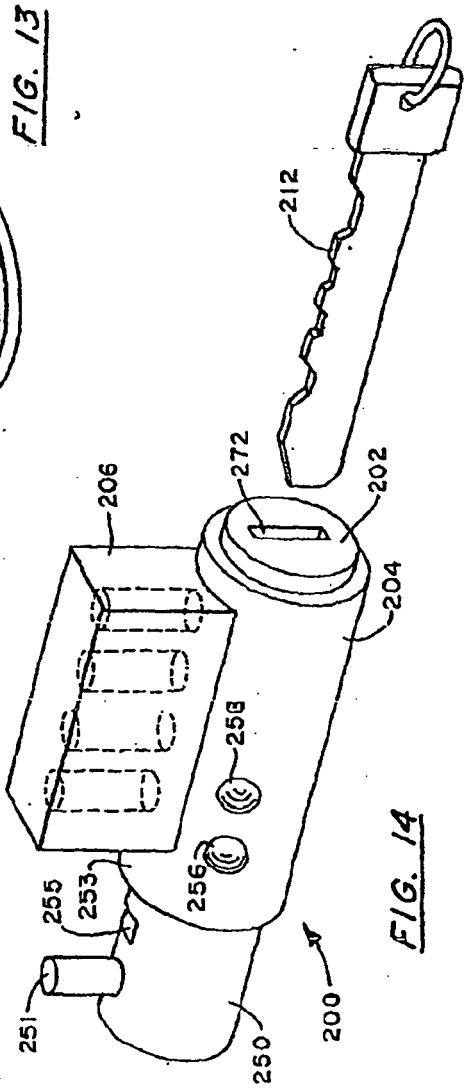

FIG. 14

PR 0163

ET50341

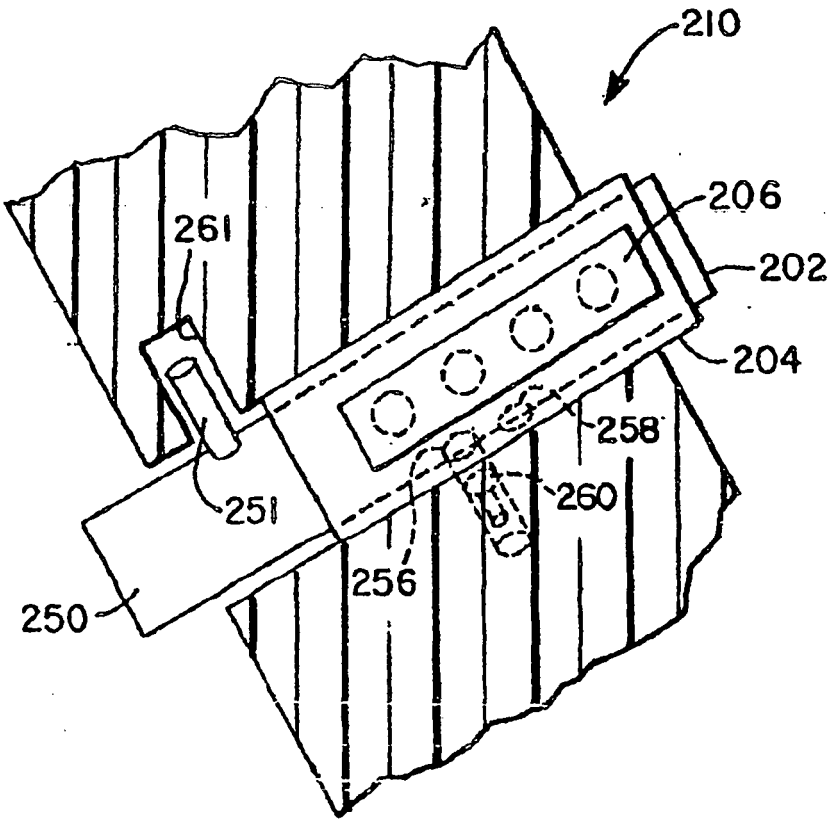

FIG. 15

LOCKABLE FIREARM SAFETY

BACKGROUND OF THE INVENTION

This invention relates generally to safety devices employed in firearms to prevent accidental or unauthorized discharge of the firearm. More particularly, this invention relates to safety devices which are lockable to prevent discharge of the firearm.

Safeties for firearms are commonplace, and numerous safety configurations have been advanced. One general type of safety mechanism involves the use of a manually displaceable cross bolt which is oriented generally transversely to the firearm barrel. The safety is operated by manually displacing the bolt between two axial positions which are retained by a spring biased detent or other means.

One such type of safety involves a hammer block which is axially displaceable between a fire and a safety position. The cross bolt is configured to selectively interfere with the hammer and/or a component in the trigger/hammer assembly to prevent the hammer from moving forward sufficiently to fire the firearm. In the safety position, the bolt blocks the hammer from engaging the firing pin or discharging the firearm. When the bolt is moved to the fire position, the hammer is free to move forward to strike the firing pin and discharge the firearm.

A second type of safety is a trigger block which may also be positioned to engage the trigger or a portion or extension of the trigger to prevent the trigger from being pulled or limit the displacement of the trigger when the bolt is in the safety position. In the safety position, the trigger cannot be activated to discharge the firearm. In the fire position, the trigger can be pulled to discharge the firearm.

The use of locks and locking mechanisms, including electronic devices, to further secure a firearm is also commonplace, and a wide variety of devices and techniques have been advanced. The vast majority of conventional firearm locks and locking mechanisms operate independently of the firearm safety.

SUMMARY OF THE INVENTION

Briefly stated, the invention in a preferred form is a lockable firearm safety which incorporates a locking mechanism into a cross bolt employed in a safety mechanism. The bolt is mounted in a fixed displaced generally transversely of the barrel. The bolt is axially displaceable between the safety and the fire position. The bolt defines a lock recess and has a keyway axially extending through an end of the bolt. The bolt has axially spaced first and second surfaces which are respectively configured to prevent the discharge of the firearm in the safety position while allowing the firearm to discharge in the fire position. A detent assembly, which comprises a detent projectable into the lock recess of the bolt, locks the bolt in the safety position to prevent the bolt from being displaced to the fire position.

The bolt is rotatable by means of a key to an angular position which is generally diametrically opposite that of the normal safety position. The key has a blade insertable into the slot to cam the detent out of the lock recess to thereby allow the bolt to be angularly rotated and to permit axial displacement of the bolt from the safety to the fire position. The bolt also may be configured with first and second axially spaced recesses to retain the bolt in a semi-stable relationship in the safety and fire positions.

In one disclosed embodiment, the bolt is engageable with the trigger in the safety position to block the trigger from

discharging the firearm. In a second disclosed embodiment, a hammer assembly is operatively connected to the trigger assembly. The bolt is engageable with the hammer assembly to block the hammer from discharging the firearm when the bolt is in the safety position. The detent assembly preferably comprises a detent pin and a spring which biases the pin toward the bolt. An outer surface of the bolt may be fixed with an indicator to indicate when the bolt is positioned in the locked angular position.

In another disclosed embodiment, the safety mechanism is secured in a locked position by means of a lock cylinder. A tailpiece extends from the lock cylinder plug. A lug extends from the tailpiece and is retainable in a slot upon angular rotation of the plug. The tailpiece includes a slot which receives an extension of the trigger when the safety is in the fire position and is also configured to engage the extension and obstruct rearward movement of the trigger when the safety is in the safety position. The lock cylinder may take the form of a key-retaining cylinder so that the key can only be removed when the locked safety position is achieved.

An object of the invention is to provide a new and improved lockable safety for a firearm.

Another object of the invention is to provide a new and improved lockable firearm safety which is reliable and provides a high degree of security for a firearm.

A further object of the invention is to provide a new and improved lockable firearm safety having an efficient and low cost construction and which can be readily incorporated into a firearm without substantial modification thereof.

A yet further object of the invention is to provide a new and improved locking device firearm which is operatively coupled in a user friendly application in conjunction with a proven safety for a firearm.

Other objects and advantages of the invention will become apparent from the specification and the drawings.

BRIEF DESCRIPTION OF THE DRAWINGS

FIG. 1 is a side view of a partial firearm with the receiver and barrel in phantom showing trigger guard assembly incorporating a lockable firearm safety in accordance with the present invention;

FIG. 2 is an enlarged fragmentary sectional view of the trigger guard assembly of FIG. 1,

FIG. 3 is a fragmentary view of components of the lockable firearm safety of FIG. 2 viewed generally in a direction of the lines 3—3 thereof;

FIG. 4 is a bottom plan view of the firearm safety components of FIG. 3;

FIG. 5 is a side elevational view of the component of FIG. 4, partly broken away to show section and partly in phantom, and rotated 90° clockwise from the right portion thereof;

FIG. 6 is a fragmentary end sectional view, partly broken away, of the component of FIG. 5;

FIG. 7A is a left end view and a corresponding schematic view of the firearm components of FIG. 3 illustrating a fire position thereof;

FIG 7B is a left end view and a corresponding schematic view of the firearm safety components of FIG. 3 illustrating a safety position thereof in the unlocked position,

FIG. 7C is a left end view and a corresponding schematic view of the firearm safety components of FIG. 3 illustrating a safety position thereof in the locked position;

FIG. 7D is a left end view and a corresponding schematic view of the firearm safety components of FIG. 3 illustrating a fire position thereof in the unlocked position;

PR 0165

ET50343

FIG. 7E is a left end view and a corresponding schematic view of the firearm components of FIG. 3 illustrating a fire position thereof;

FIG. 8 is a side view, partly broken away and partly in section, illustrating an alternate embodiment of a component for firearm safety in accordance with the invention;

FIG. 9 is a left end view, partly broken away to show section, of the component of FIG. 8;

FIG. 10 is a bottom plan view of the component of FIG. 8;

FIG. 11 is a perspective view of a representative key employed for the lockable firearm safety of FIG. 1;

FIG. 12 is a fragmentary perspective view, partly in phantom and partly broken away, of a firearm incorporating a second embodiment of a lockable firearm safety and a corresponding key in accordance with the invention;

FIG. 13 is a fragmentary perspective view of trigger guard assembly which has been partially disassembled, portions being illustrated in phantom, said trigger guard assembly being employed for a third embodiment of a lockable firearm safety in accordance with the present invention;

FIG. 14 is a perspective view of a lock unit and key employed in the trigger guard assembly of FIG. 13; and

FIG. 15 is a sectional view taken along the line 15—15 of FIG. 13 with the lock unit of FIG. 14 being assembled in place, said lockable firearm assembly being partly broken away and partly illustrated in phantom.

DETAILED DESCRIPTION OF THE PREFERRED EMBODIMENT

With reference to the drawings, wherein like numerals represent like parts throughout the several figures, a lockable firearm safety in accordance with the present invention is generally designated by the numerals 10 (FIGS. 1–2), 110 (FIG. 12) and 210 (FIG. 15). The lockable firearm safety employs a key 12, 112 (FIGS. 11, 12), 212 (FIG. 14) for transforming the firearm between an unlocked and a locked safety position, as will be detailed below. The safety may assume a wide variety of forms and is configured, as will be described below, to be readily incorporated into conventional firearms to provide a trigger block-type safety 10 or a hammer block-type safety 120 which can be locked to prevent the safety from being displaced to the fire position. The safety may also employ a conventional lock mechanism such as the embodiment of safety 210.

A number of firearms employ a safety in the form of a displaceable bolt which functions to mechanically block or obstruct the discharge of the firearm when the trigger is pulled. The bolt is mounted in a transverse orientation relative to the barrel 16 of the firearm. For a hammer block-type safety, the bolt is configured to, upon selective positioning, block the hammer from striking the firing pin and in a second position allow the hammer to strike the firing pin without any interference. The bolt is typically manually displaced from the fire position to the safety position. In the safety position, the bolt blocks the hammer from striking the firing pin. For a trigger block-type safety, the bolt interacts with the trigger to limit rearward pivot of the trigger when the bolt is in the safety position, and the trigger is free to be pulled or to discharge the firearm when the bolt is in the fire position.

A representative trigger blo[illegible] safety which is illustrated and represents the respective [illegible] al trigger blo[illegible] and safety and, for the illustrated [illegible] lockable firearm safety 10 in accordance with [illegible] invention [illegible] illustrated in FIGS. 1–3. A trigger guard assembly 20 includes a trigger guard 22 for a trigger 24. The trigger guard assembly is typically mounted to the underside of the receiver 30 (not illustrated) in a conventional fashion with the trigger 24 being pivotally mounted by means of a pin 26. The trigger 24 is pulled in a conventional fashion to cause the hammer (not illustrated) to move forward and strike the firing pin (not illustrated).

The safety bolt 50 is received in a cross-bore 51 of the trigger guard or in some embodiments a cross-bore of the receiver. With reference to FIGS. 3–7, the safety bolt 50 includes opposed ends 52 and 54 typically designated as respective safe and fire ends. End 52 typically is ribbed to facilitate depressing the bolt transversely. The safe end projects transversely from the guard or receiver to indicate that the bolt is in the safe position. When the bolt is depressed inwardly, the bolt moves to a fire position. The transverse positions of the safety bolt are defined by respective axially spaced, safe and fire groove-like recesses 56 and 58.

A pin or detent 60 controlled by a plunger 62 and spring 64 is mounted in a bore 66 of the trigger guard of the receiver. Plunger bore 66 intersects cross-bore 51 in perpendicular relationship. The detent is spring-biased for projection into a recess 56, 58 to define a generally semi-stable bolt position. However, upon manual depression of the bolt 50 between the safe and the fire positions, the detent 60 is sufficiently resiliently biased and the recess defining walls of the recesses are contoured to permit the detent to cam over the rib-like boundary between one recess to the opposing recess to thereby provide a well-defined semi-stable safe and fire position for the safety bolt 50.

The safety bolt 50 is configured as required for cooperation with the various elements of the trigger/hammer assembly to either allow the hammer to move forward to a position for firing the firearm or to block such movement. For example, the trigger may have a rearward integral shoulder or tab 28 which engages a shoulder surface 53 of the bolt in the safety position and thereby prevents the trigger from moving to discharge the firearm. In the fire position, the tab 28 is free to pivot into the recess 56 without restriction. The techniques and structures for accomplishing this bistable function are quite extensive and are not the specific subject of the invention.

The safety bolt 50 is also provided with a well-like lock recess 70 (FIGS. 4–6) which has a deeper radial depth than that of the fire and safety recesses 56, 58. The recess 70 may be somewhat exaggerated in the FIG. 4 drawing. In addition, a transverse key slot 72 extends through the fire end of the bolt. The slot 72 is configured to accept the key blade 14 of key 12. When the bolt 50 is in the safe position, a key 12 may be inserted into the slot 72. The bolt is then rotated approximately 180° so that the detent 60 engages in the well under the bias of spring 64. The sides of the well are sufficiently steep so that the detent is not easily dislodged from the well, upon either torquing the bolt or applying an axial force to the bolt 50. Consequently, the bolt cannot be manually transformed to the fire position. Thus, the blocking bolt is locked in the safety position.

The operation of the lockable firearm safety is illustrated in FIGS. 7A–7E which show the relative positions of the detent 60, safe recess 56, fire recess 58, lock recess 70 and key slot 72. FIG. 7A illustrates the safety bolt in the fire position. FIG. 7B illustrates the safety bolt in the safe position with the safety bolt being unlocked and the arrow representing the direction of axial displacement. FIG. 7C

PR 0166

ET50344

illustrates the safety bolt in the safe locked position with the arrow representing the direction of rotation from FIG. 7B to FIG. 7C. FIG. 7D illustrates the safety bolt upon return to the safety and unlocked position with the arrow illustrating the direction of rotation from FIG. 7C to FIG. 7D. FIG. 7E illustrates the position of the safety bolt in the fire position with the arrow representing the direction of axial displacement to the fire position. The safety bolt is configured so that it cannot be locked in the fire position and can only be locked and unlocked in the safety position. It should also be appreciated that the axial position of the detent 60 relative to the receiver/trigger guard is fixed, while the axial position of the safety bolt is displaceable to achieve the desired safety and fire status for the firearm

The blade 14 of the key is configured so that the key may be inserted into slot 72 so that the blade cams the detent 60 from the well 70. This permits rotation of the bolt back to the initial safety position (FIG. 7D). The detent may follow the groove path of recess 56 to the groove position illustrated in FIG. 7D. This is the normal safety position of the bolt. The bolt is now readily transformable to the fire position by manual depression of the bolt (FIG. 7E). The detent/groove relationship is such that the detent can be cammed out of the safety recess 56 for reception into the fire recess 58.

It should be appreciated that for additional security, the detent may be replaced by a stack of tumbler pins and the key blade configured so that a sheer line is formed to permit the rotation from the locked to the unlocked position. Likewise, two or more axially spaced stacks of pins (not illustrated) may be employed.

With reference to FIGS. 8–10 and 12, lockable hammer block-type safety bolt 150 is illustrated. In this configuration, the bore 151 for the safety bolt extends through the receiver 130, and the detent bore 166 is implemented at one side at the rear of the receiver. The structures of bolt 150 corresponding to those of bolt 50 are designated by the same two digit numeral preceded by a "1." For bolt 150, the safe recess 156 only extends approximately 180° about the periphery to define a rotational path for locking and unlocking the safety bolt. The bolt 150 has a recess 155 which permits the hammer 132 to move forward and strike the firing pin (not illustrated) when the bolt is in the fire position. In the safe position, an appendage on the hammer strikes the shoulder 153 and is thereby obstructed from striking the firing pin.

With reference to FIGS. 13–15, a lockable firearm safety 210 employs a lock cylinder 200. The cylinder comprises a plug 202, a shell 204 and a bible 206 which houses stacks of pins. A keyway 272 receives a key 212 which is cut to engage the lock pins in a fashion which permits a shear line between the plug and shell to thereby permit rotation of the plug 202 relative to the shell 204. For comfort and convenience, rather than the usual extension, key 212 preferably has a rounded end with a rotating ring attached for rotating the key blade. The cylinder and key may be custom bitted for each firearm. The lock cylinder is preferably a key-retaining lock which prevents removal of the key unless the cylinder is in the locked rotational position. A tailpiece 250 which functions as a safety bolt projects from the rear of the lock cylinder. A locking lug 251 projects radially from the tailpiece and with respect to the rotational axis of the plug. The tailpiece also forms a channel or recess 255 (FIG. 14) which receives the trigger tab or shoulder 28 when the lock cylinder is transversely displaced to the fire position. In the safe position, the tailpiece has a surface 253 which [illegible] with the trigger shoulder to obstruct rearward [illegible] of the [illegible] to prevent firing of the firearm. It should be appreciated that the tailpiece (not illustrated) and/or shell could be configured and positioned to form a hammer block safety. A cap (not illustrated) may be mounted to the end of the tailpiece to provide a pleasing finished appearance.

With additional reference to FIG. 13, the trigger guard frame 220 has a keyhole-shaped transverse slot 209 which receives the lock cylinder 200. The detent assembly comprises a spring-biased plunger 260 which maintains the lock cylinder in safe and fire positions by engaging axially spaced cavities 256, 258 formed in the side of the lock cylinder shell. The trigger guard frame 220 includes a slot 261 which receives the locking lug 251 upon rotation of the plug and tailpiece at a given axial position of the lock cylinder 200 constituting the safe position of the firearm.

When the firearm is in the safe locked position wherein the lock cylinder is locked, the lug 251 is retained in the slot 261, and axial displacement of the safety which comprises the lock cylinder, including the tailpiece, is axially limited. The safety can be axially displaced to the fire position by rotating (unlocking) the lock cylinder with the key and transversely axially moving the cylinder to the fire position. In the fire position, the shoulder 28 on the trigger will pivot into the slot on the tailpiece and allow the firearm to fire. It is preferred that the lock cylinder be a key-retaining lock wherein the key will be retained in the cylinder when the firearm is in the fire position and may only be removed from the lock when the locked safety position is obtained. The key will thus always be required to fire the firearm.

It will be appreciated that other forms of the lockable safety may be employed to provide for a secure lock position in the safety mode and allow the firearm to be unlocked and the firearm used in a conventional manner in conjunction with the block-type safety.

While a preferred embodiment of the foregoing invention has been set forth for purposes of illustration, the foregoing description should not be deemed a limitation of the invention herein. Accordingly, various modifications, adaptations and alternatives may occur to one skilled in the art without departing from the spirit and the scope of the present invention

What is claimed is:

1. A safety assembly for a firearm having a barrel comprising:

a trigger activatable for discharging said firearm;

bore means for defining a bore disposed generally transversely relative to said barrel;

a bolt mounted in said bore and axially displaceable therein between a safety position and a fire position, said bolt having axially spaced first and second surfaces respectively configured to prevent said trigger from discharging said firearm in said safety position and allowing said trigger to discharge said firearm in said fire position, said bolt defining a lock recess and a keyway axially extending through an end of said bolt; and

a pin assembly comprising a pin projectable into said lock recess of said bolt, so that when said bolt is positioned in said safety position said bolt is rotatable to an angular position wherein said pin projects into said lock recess to prevent said safety bolt from being displaced to said fire position.

2. The safety assembly of claim 1 further comprising a key having a blade, said blade being insertable into said keyway to displace said pin out of said lock recess to thereby allow said bolt to be angularly rotated to permit axial displacement of said bolt from said safety to said fire position

PR 0167

ET50345

3. The safety assembly of claim 1 wherein said bolt further comprises first and second axial spaced recesses diametrically opposite said lock recess.

4. The safety assembly of claim 3 wherein said pin is projectable into said first and second recesses to retain said bolt in semi-stable relationship in said safety and said fire position.

5. The safety assembly of claim 1 wherein said bolt is engageable with said trigger in said safety position to block said trigger from discharging said firearm.

6. The safety assembly of claim 1 further comprising a hammer assembly operatively connected to said trigger assembly and wherein said bolt is engageable with said hammer assembly to block said hammer from discharging said firearm in said safety position.

7. The safety assembly of claim 8 further comprising an indicator to indicate that the bolt is positioned in said angular position wherein said pin projects into said lock recess.

8. A safety assembly for a firearm having a barrel comprising:

a trigger activatable for discharging said firearm;

bore means for defining a bore disposed generally transversely relative to said barrel;

a bolt mounted in said bore and axially displaceable therein between a safety position and a fire position, said bolt having a first recess and a second recess corresponding to said safety and said fire positions, said bolt having axially spaced first and second surfaces to prevent said trigger from discharging said firearm in said safety position and allowing said trigger to discharge said firearm in said fire position, said bolt defining a lock recess and a keyway axially extending through an end of said bolt; and

a pin assembly comprising a pin projectable into said lock recess of said bolt, so that when said bolt is positioned in said safety position said bolt is rotatable to an angular position wherein said pin projects into said lock recess to prevent said safety bolt from being displaced to said fire position.

9. The safety assembly of claim 8 wherein said lock recess is diametrically opposite said safety recess in general axial alignment therewith.

10. The safety assembly of claim 8 wherein said first and second recesses are in general angular alignment.

11. The safety assembly of claim 8 wherein said pin assembly comprises a spring which biases said pin toward said bolt.

12. The safety assembly of claim 8 further comprising a key which is insertable into said keyway, said key having a blade portion which upon insertion forces said pin from said locking recess to permit angular rotation to an unlocked angular safety position.

* * * * *

23

PR 0169

ET50347

US006240670B1

(12) **United States Patent**
Findlay

(10) **Patent No.: US 6,240,670 B1**
(45) **Date of Patent: Jun. 5, 2001**

(54) **LOCKING MECHANISM FOR FIREARMS**

(75) Inventor: David S. Findlay, Mohawk, NY (US)

(73) Assignee: RA Brands, L.L.C., Madison, NC (US)

(*) Notice: Subject to any disclaimer, the term of this patent is extended or adjusted under 35 U.S.C. 154(b) by 0 days.

(21) Appl. No.: 09/390,159

(22) Filed: Sep. 3, 1999

(51) Int. Cl.[7] F41A 17/64

(52) U.S. Cl. 42/70.08; 42/70.11; 42/16; 89/148; 89/185

(58) Field of Search 42/70.08, 16, 70.11; 89/148, 185

(56) **References Cited**

U.S. PATENT DOCUMENTS

D 34,563		5/1901	Newman .	
0,263,244		8/1882	Taylor .	
1,305,830	*	6/1919	Mudd	42/16
1,461,387	*	7/1923	Fearn	42/70.08
1,958,603		5/1934	Bacon	70/47
2,049,548		8/1936	Swanson .	
2,819,551		1/1958	Baierl .	
2,856,718		10/1958	Fischer .	
3,553,877		1/1971	Welch et al. .	
3,624,945		12/1971	Foote .	
3,648,562	*	3/1972	Loeble	89/185
3,673,725		7/1972	Craverer	42/70.11
3,882,622		5/1975	Perlotto	42/70.11
4,021,955	*	5/1977	Curtis	42/70.08
4,532,729		8/1985	Von Muller	42/70.11
4,726,136	*	2/1988	Dornaus et al.	42/70.08
5,241,769		9/1993	Von Muller	42/70.11
5,467,550		11/1995	Mumbleau	42/70.11
5,553,473		9/1996	Keller	70/358
5,671,560		9/1997	Meller	42/70.11
5,910,003		6/1999	Kleinpaul	42/70.11

FOREIGN PATENT DOCUMENTS

696034	*	9/1940	(DE)	42/70.08
4303333		2/1993	(DE) .	
858485	*	11/1940	(FR)	42/70.08

* cited by examiner

Primary Examiner—Stephen M. Johnson
(74) *Attorney, Agent, or Firm*—Huntley & Associates

(57) **ABSTRACT**

A locking mechanism for use in a wide variety of firearms to assist in securing the firearm from unauthorized use, the locking mechanism being rotatable between an unlocked position where it allows movement of the firing pin and a locked position where it prevents movement of the firing pin.

23 Claims, 5 Drawing Sheets

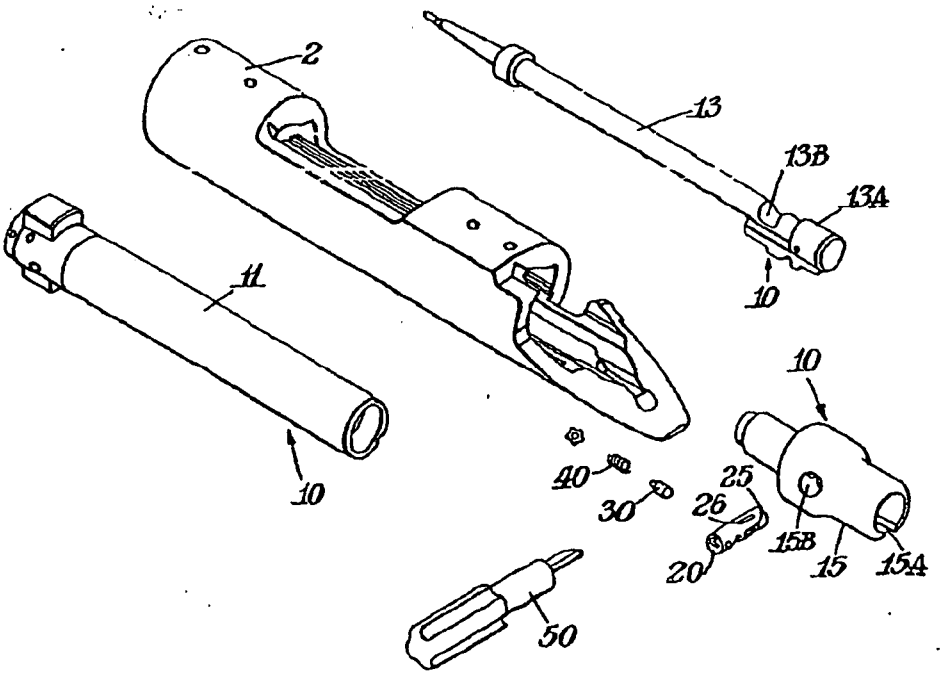

PR 0170

ET50348

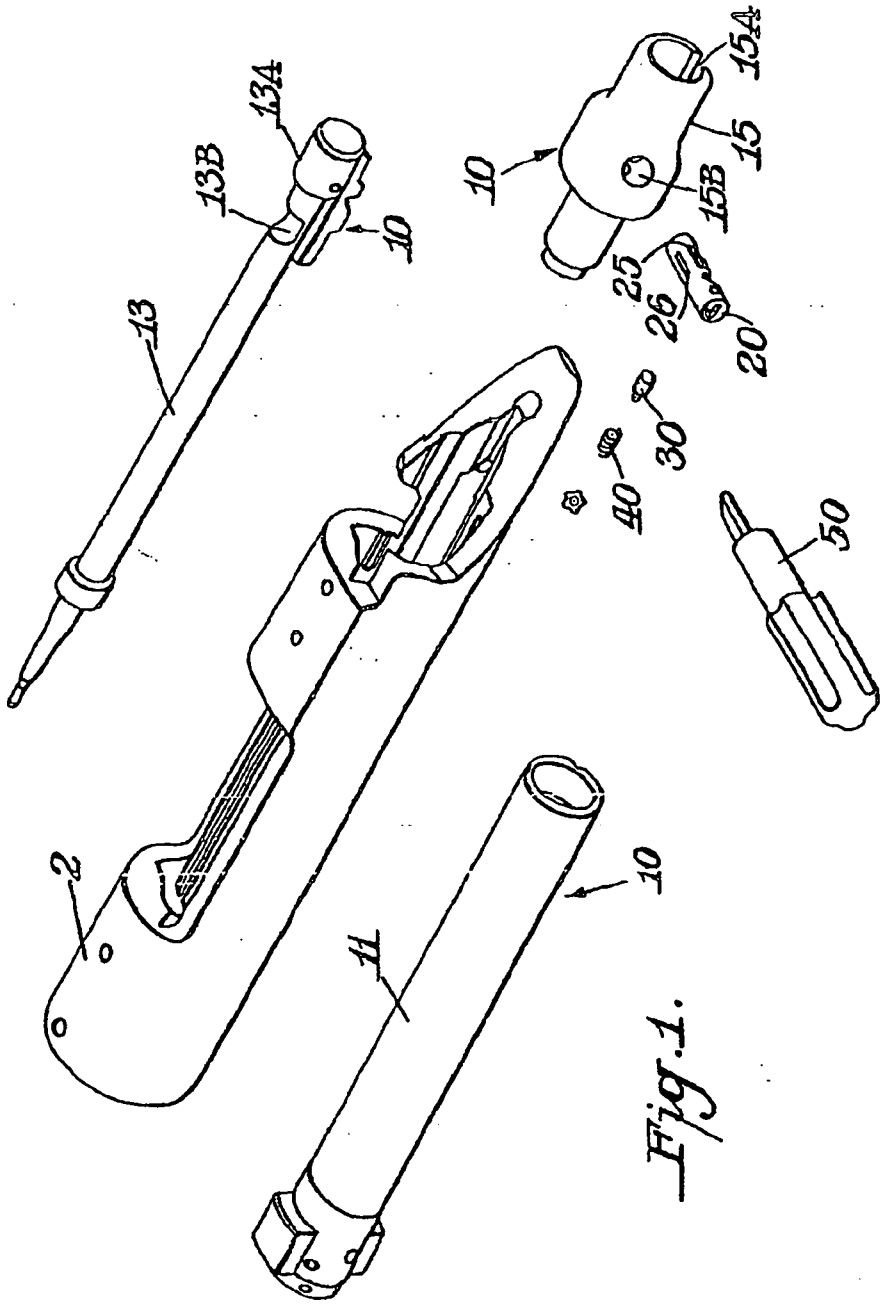

Fig. 1.

PR 0171

ET50349

US005910003A

United States Patent [19]

Kleinpaul

[11] Patent Number: 5,910,003

[45] Date of Patent: Jun. 8, 1999

[54] LOCKING DEVICE FOR GUNS

[75] Inventor: Cláudio Alexandre Kleinpaul, Porto Alegre, Brazil

[73] Assignee: Forjas Taurus S/A, Brazil

[21] Appl. No.: 08/939,542

[22] Filed: Sep. 29, 1997

[30] Foreign Application Priority Data

Oct. 25, 1996 [BR] Brazil 9604462
Jul. 18, 1997 [BR] Brazil 002489

[51] Int. Cl.[6] F41A 17/00

[52] U.S. Cl. 42/70.11; 42/70.08

[58] Field of Search 42/70.11, 70.08

[56] References Cited

U.S. PATENT DOCUMENTS

333,416	12/1885	Kelton	42/66
565,678	8/1896	Foster	42/66
774,712	11/1904	Vold	42/70.11
1,227,531	5/1917	Donadio	42/70.08
3,553,877	1/1971	Welch et al.	42/70
4,768,302	9/1988	Beretta	42/70.08
4,769,936	9/1988	Miller	42/66
4,972,618	11/1990	Justice, Sr. et al.	42/70.11
5,042,185	8/1991	Justice, Sr.	42/70.11
5,208,406	5/1993	Badali	42/70.08

Primary Examiner—Charles T. Jordan
Assistant Examiner—Meena Chelliah
Attorney, Agent, or Firm—Bachman & LaPointe, P.C.

[57] ABSTRACT

A locking device for guns, comprising a cylindrical locking pin housed in a housing cavity made in a suitable part of the revolver, having one operable head portion apparent on the external surface of the revolver and an opposite end portion, and a substantially helicoidal groove cooperating with a retention pin, the device locking the revolver when, upon operation with a suitable key, the said locking pin translates inside its housing cavity projecting one of its ends outwards the said housing cavity in order to cooperate with the striking surface so that the said projected end obstructs hammer cocking movement.

5 Claims, 6 Drawing Sheets

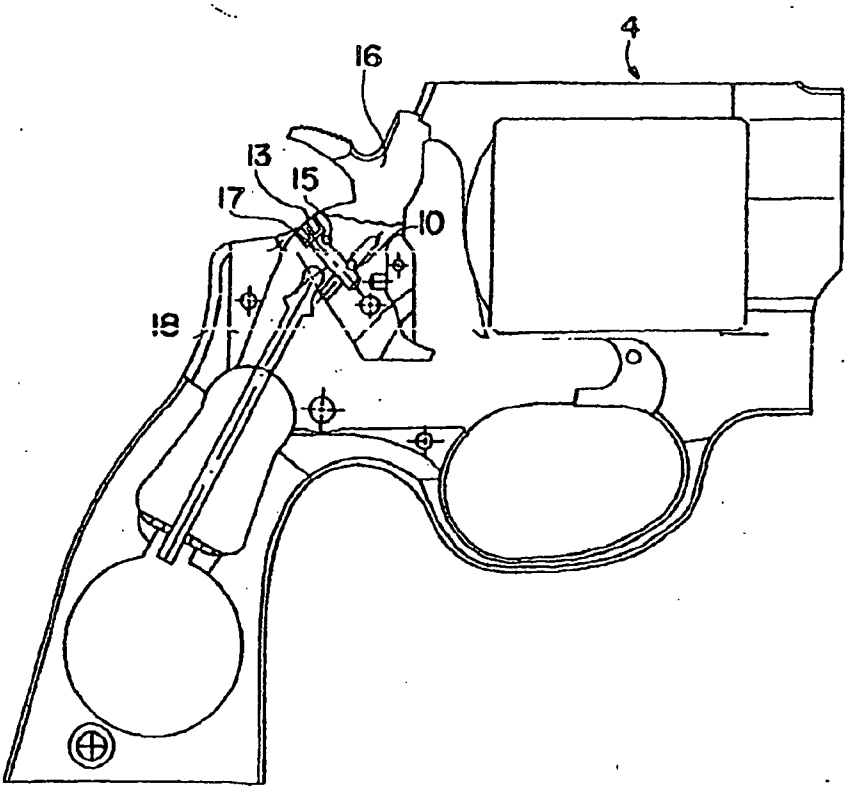

PR 0172

ET50350

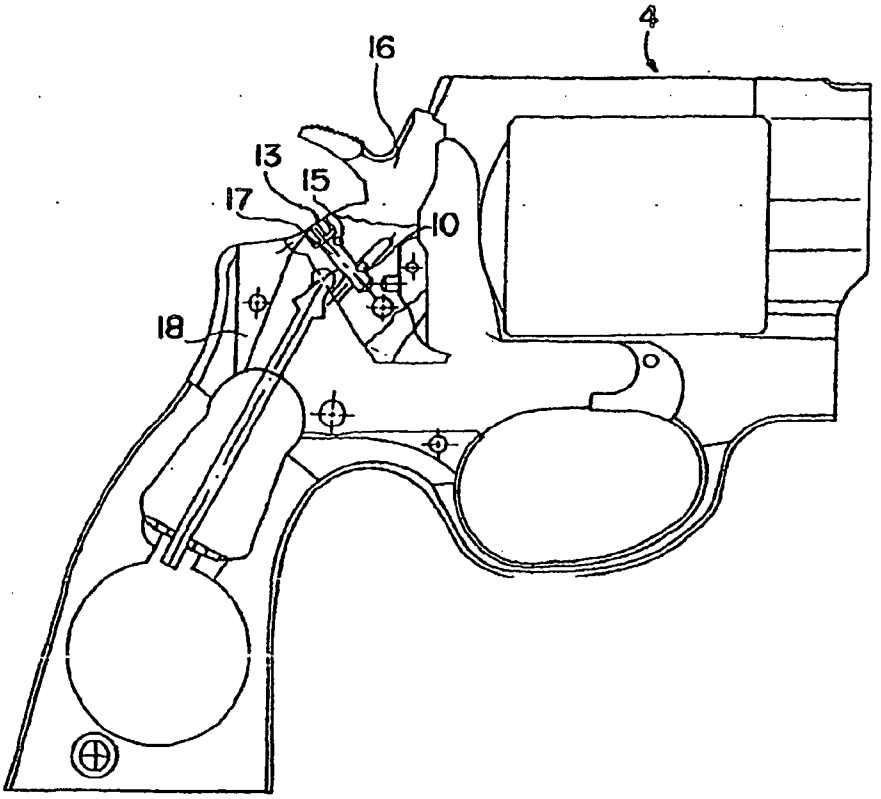

FIG. 1

PR 0173

ET50351

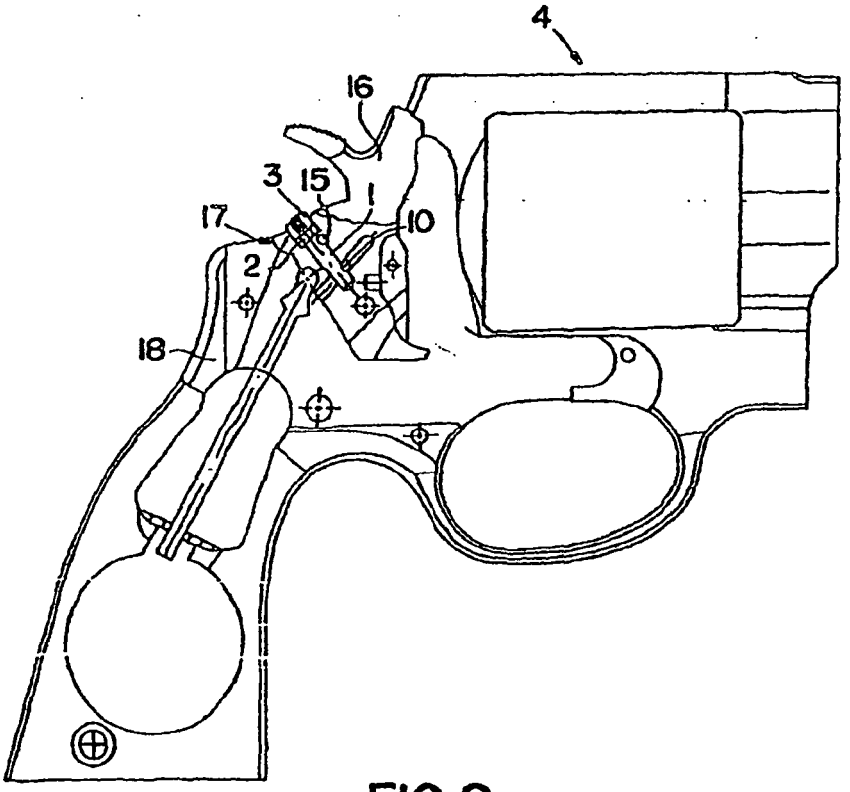

FIG. 2

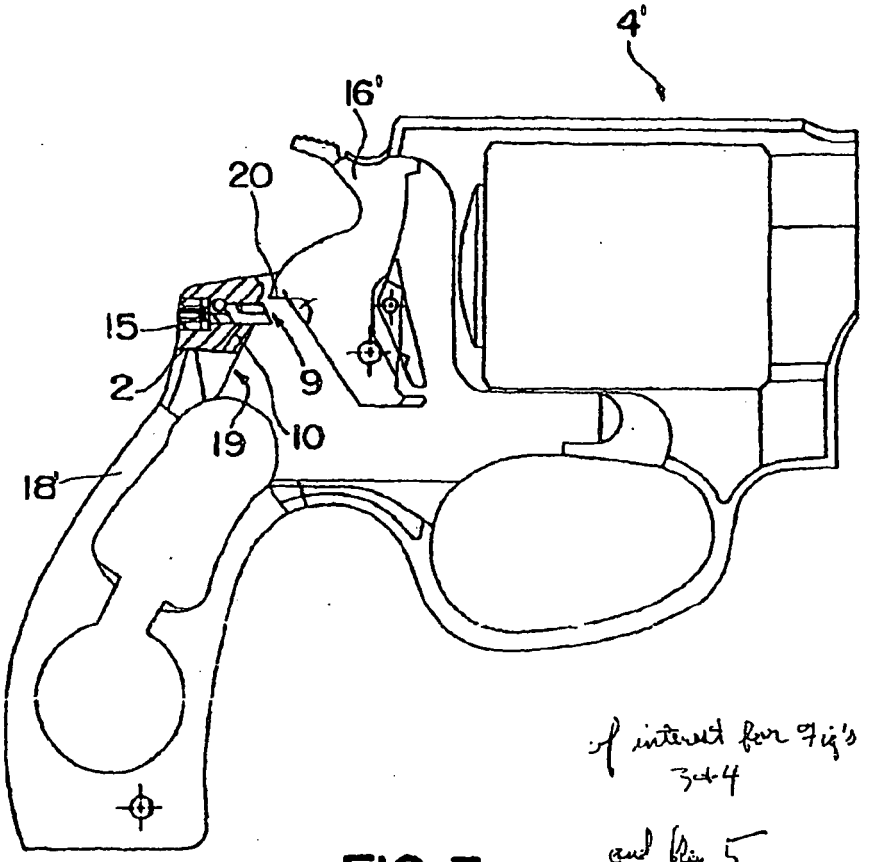

of interest for Fig's 3+4 and Fig 5

FIG. 3

PR 0175

ET50353

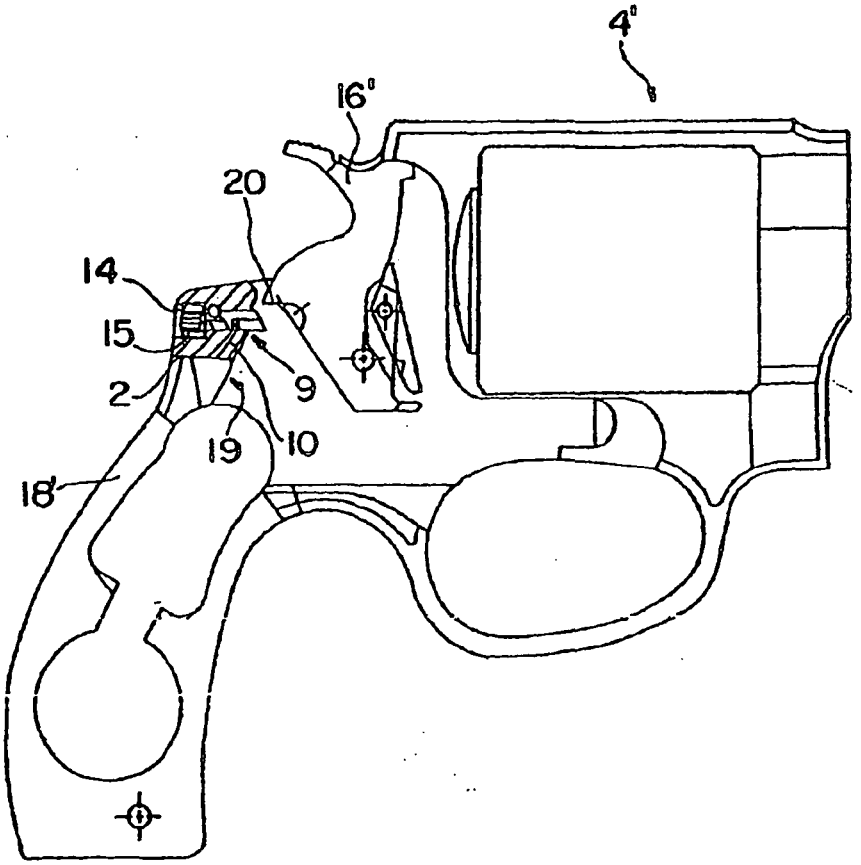

FIG. 4

PR 0177

ET50355

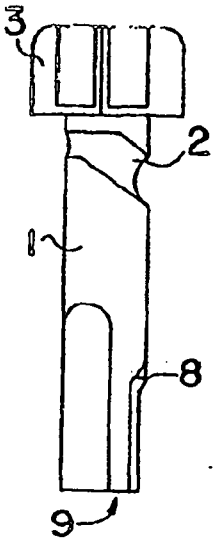

FIG. 5

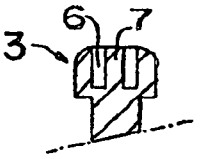

FIG. 6

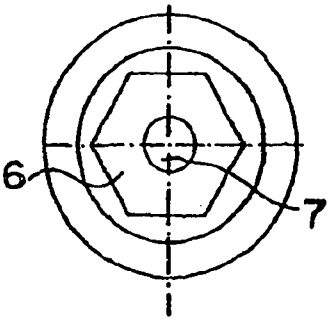

FIG. 7

PR 0178

ET50356

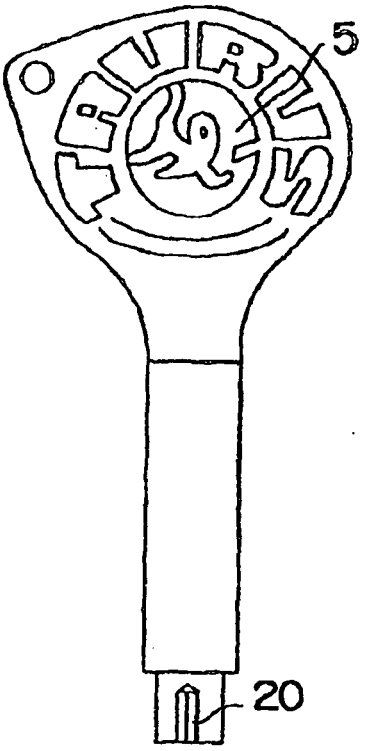

FIG. 8

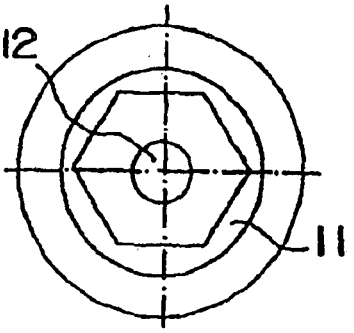

FIG. 9

PR 0179

ET50357

LOCKING DEVICE FOR GUNS

The present invention refers to a locking device for guns, more precisely to a locking device able to prevent the use of a revolver, a pistol or the like, either by unauthorized people or unable people, for instance children.

The state of art comprises several kinds of locking devices for guns. One of them consists of a block made of hard plastic material designed to be interposed between the back of the trigger and the frame surrounding the trigger. When locked in place with a suitable key, this device avoids trigger movement, so that the revolver cannot be cocked and therefore cannot be shot, unless the user withdraws this block from its locking position using a suitable key. A locking device like this one works well but has the drawback of being external to the revolver, so that when not in use, it can be lost, the revolver becoming usable by either unauthorized or unable people like children.

Another kind of locking device for revolvers is that disclosed in the Brazilian Patent PI 8904218-2. This locking device comprises a cylindrical body housed in the handle of the revolver, perpendicular to the main spring guide and beneath the main helical spring bearing. The cylindrical body has a hole perpendicular to its axis and also an apparent end in the handle, this apparent end engages with a suitable key only.

When the revolver is unlocked, the cylindrical body hole is aligned with the lower end of the main spring guide, therefore allowing the downward movement of the main spring guide upon cocking the hammer; in this situation, the user can fire shots with the revolver. In order to lock the revolver, the user must rotate the cylindrical body about 90° with the aid of the suitable key, so that the end of the main spring guide cannot pass through the hole, avoiding the downward movement of the main spring guide and therefore avoiding the cocking of hammer.

This kind of locking device works well too, but can be employed only in revolvers that comprise a main spring of helical kind with a main spring guide, not to a revolver comprising a main spring of the blade kind.

It is the object of the present invention to provide a locking device for revolvers, pistols and the like that overcomes the drawbacks of state of art locking devices.

Particularly, it is the object of the present invention to provide a locking device for guns which can be employed in revolvers of both helical and blade main springs.

It is still another object of the present invention to provide a locking device which can be adapted into revolvers already produced and sold.

These objects are achieved by a locking device comprising a cylindrical locking pin housed in a housing cavity made in a suitable part of the revolver, having one operable head portion apparent from the external surface of the revolver and an opposite end portion, and a substantially helicoidal groove cooperating with a retention pin, the device locking the revolver when, upon operation with a suitable key, the said locking pin translates inside its housing cavity projecting one of its ends outwards the said housing cavity in order to co-operate with the striking surface so that the said projected end obstructs hammer cocking movement.

The device will be locked when one of the two opposite ends of the locking pin is projected out of its respective housing cavity and cooperates with a given striking surface, and otherwise the device will be unlocked when none of the two opposite ends of the locking pin is projected out of its respective housing cavity and cooperates with a given striking surface.

Preferentially, the said operable head portion apparent from the external surface of the revolver has connective means to engage with a suitable key only, and cooperates with the said locking pin, there are positioning means designed to establish the two correct positions that the device can be in assume, either "locked" or "unlocked".

In one preferred embodiment of the present invention, this locking pin is housed in a cavity made in the rear portion of the hammer. In this preferred embodiment, the revolver is locked when after rotation of the locking pin with the aid of the suitable key, the head portion of the locking pin remains in a projected position relative to the rear surface of the hammer, in order to cooperate with a striking edge of revolver frame. In this embodiment, the locking position of the device is achieved when one end of the locking pin (head portion) cooperates with a given striking surface (striking edge of revolver frame).

In an alternative embodiment of the present invention, this locking pin is housed in a cavity made in the rear upper portion of revolver frame. In this alternative embodiment, the revolver is locked when the locking pin end opposite to the head portion remains in a projected position relative to the inner surface of the revolver frame, in order to cooperate with a hammer striking edge provided in the rear portion of the hammer. In this alternative embodiment, the locking position of the device is achieved when one end of the locking pin (the end opposite to the head portion) cooperates with a given striking surface (hammer rear striking edge).

The locking device of the present invention will be better understood with the following description of a revolver, but not limited to, made with reference to the drawings attached hereto, in which:

FIG. 1 is a side view of a revolver frame, showing a partially sectioned hammer incorporating a locking device in the "unlocked" position according to a preferred embodiment of the present invention;

FIG. 2 is a side view of a revolver frame, showing a partially sectioned hammer incorporating a locking device in the "locked" position according to a preferred embodiment of the present invention;

FIG. 3 is a side view of a revolver frame partially sectioned in its upper rear portion, where the frame incorporates a locking device according to the alternative embodiment of the present invention, the locking device shown in the "unlocked" position;

FIG. 4 is a side view of a revolver frame partially sectioned in its upper rear portion, where the frame incorporates a locking device according to the alternative embodiment of the present invention, the locking device shown in the "locked" position;

FIG. 5 is a front view of the locking pin of the locking device according to the present invention;

FIG. 6 is a cross-sectional view of the head portion of the locking pin shown in FIG. 5;

FIG. 7 is a plan view of the locking pin shown in FIG. 5;

FIG. 8 is a front view of a suitable key to operate the locking device of the present invention; and

FIG. 9 is a view from below of the lower end of the key shown in FIG. 8.

According to the drawings, the locking device of the present invention comprises a cylindrical locking pin (1) with a substantially helicoidal groove (2) and an operable head portion (3) apparent on the external surface of the revolver (4) having means to engage with a suitable key (5) only, which means comprise a hexagonal cavity (6) with a central rod (7) Cooperating with this locking pin (1), more

PR 0180

ET50358

particularly cooperating with the locking pin positioning cavity (8), there are positioning means (10) designed to establish the two correct positions that the device can assume, either "locked" or "unlocked". In order to anchor the locking pin (1) in its suitable housing cavity (13, 14), a retention pin (15) which cooperates with the said locking pin helicoidal groove (2) is provided.

The locking pin head portion (3) has an upper round end to avoid its operation by means of pliers or other tool different from the suitable key (5). The said suitable key (5) has an operable hexagonal end (11) comprising a central cavity (12) matching the shape of the central rod (7) of the locking pin head portion cavity (6).

The said positioning means (10) that cooperate with the said locking pin cavity (8) can comprise a ball-spring or plunger-spring set housed in a suitable cavity.

With reference to FIGS. 1 and 2, in the preferred embodiment of the locking device for revolvers according to the present invention, the said locking pin (1) is housed in a cavity (13) made in the hammer (16). In this preferred embodiment, the hammer (16) also incorporates both positioning means (10) and retention pin (15). In FIG. 1, the locking device is shown in its "unlocked" position; in this position the user can fire shots with the revolver, since the locking pin head portion (3) is entirely inside its housing cavity (13) and therefore nothing obstructs hammer cocking movement.

In order to achieve the "locked" position shown in FIG. 2, the user must first engage the operation end (11) of the suitable key (5) with the locking pin head portion cavity (6), and rotate the locking pin (1) about 90°, until positioning means (10) engage in the cavity (8) relative to the "locked" position. In doing so, the retention pin (15) cooperating with the locking pin helicoidal groove (2) forces the locking pin (1) to translate inside its housing cavity (13), which projects the locking pin head portion (3) out of the rear surface of the hammer (16). Once the device is in the "locked" position shown in FIG. 2, the user cannot fire shots with the revolver, since the locking pin head portion (3) obstructs hammer cocking movement now by cooperating with a striking edge (17) of the revolver frame (18).

With reference to FIGS. 3 and 4, in the alternative embodiment of the locking device for revolvers according to the present invention, said locking pin (1) is housed in a cavity (14) made in the upper rear portion of the revolver frame (18'). In this alternative embodiment, the said portion of the revolver frame (18') also incorporates both positioning means (10) and retention pin (15). In FIG. 3, the locking device is shown in its "unlocked" position; in this position the user can fire shots with the revolver, since the locking pin end (9) is entirely retracted in its respective cavity (14) and therefore nothing obstructs hammer cocking movement.

In order to achieve the "locked" position shown in FIG. 4, the user must first engage the operation end (11) of suitable key (5) with locking pin head portion cavity (3), and rotate the locking pin (1) about 90°, until positioning means (10) engage in the cavity (8) relative to the "locked" position. In doing so, the retention pin (15) cooperating with the locking pin helicoidal groove (2) forces the locking pin to translate inside its housing cavity (14), which projects the locking pin end (9) opposite to the head portion (3) from the inner surface (19) of the revolver frame (18'). Once the device is in the "locked" position shown in FIG. 4, the user cannot fire shots with the revolver, since the said locking pin end (9) obstructs hammer cocking movement now by cooperating with a striking edge (20) of hammer (16').

It must be clear that in both preferred and alternative embodiments of the present invention shown in FIGS. 1 to 4, to pass from "locked" position to "unlocked" position, the user must only proceed in the contrary way to that described in order to achieve the "locked" position.

I claim:

1. Locking device for guns, comprising: a revolver having a rear portion with an external surface thereof and a hammer therein operative to move to the hammer cocking position and a revolver frame having a striking edge for said hammer; a locking pin housed in a housing cavity made in said rear portion of the revolver; an operable head portion of said locking pin apparent on the external surface and an opposite end portion of said locking pin and a substantially helicoidal groove of said locking pin cooperating with a retention pin; wherein the device locking the revolver when, upon operation with a suitable key, the said locking pin translates inside said housing cavity projecting said head portion outwards of the said housing cavity in order to cooperate with said striking edge so that said projecting head portion obstructs hammer cocking movement.

2. Locking device according to claim 1, wherein said operable head portion apparent on the external surface of the revolver has connective means to engage with a suitable key.

3. Locking device according to claim 2, wherein said connective means comprise a hexagonal cavity with a center rod.

4. Locking device according to claim 1, including positioning means cooperating with said locking pin designed to establish the two correct positions for said locking pin.

5. Locking device according to claim 4, wherein the positioning means comprise a couple ball-spring or a couple plunger-spring, housed in a suitable cavity, which cooperate with positioning cavities in said locking pin.

* * * * *

PR 0181

ET50359

US005867928A

United States Patent [19]

Plebani

[11] Patent Number: 5,867,928

[45] Date of Patent: Feb. 9, 1999

[54] SEMI-AUTOMATIC GAS-OPERATED SHOTGUN WITH AN IMPROVED SAFETY DEVICE

[75] Inventor: Dario Plebani, Ome, Italy

[73] Assignee: Franchi S.p.A., Italy

[21] Appl. No.: 953,827

[22] Filed: Oct. 19, 1997

[30] Foreign Application Priority Data

Feb. 24, 1997 [IT] Italy MI97A0390

[51] Int. Cl.[6] F41A 3/00

[52] U.S. Cl. 42/17, 42/21; 42/70.01

[58] Field of Search 42/17, 21, 70.01

[56] References Cited

U.S. PATENT DOCUMENTS

1,648,831 11/1927 Strickler 42/17

2,224,928 12/1940 Reising 42/3

2,794,285 6/1957 Clarkson 42/17

3,171,225 3/1965 Green et al 42/17

4,601,122 7/1986 Beretta 42/21

4,856,217 8/1989 Benelli 42/17

Primary Examiner—Charles T Jordan

Assistant Examiner—Meena Chelliah

Attorney, Agent, or Firm—Sofer & Haroun LLP.

[57] ABSTRACT

A semi-automatic gas-operated shotgun includes a safety device which locks the firing mechanisms of the gun and simultaneously locks the breech-block slide in the open position, spaced from the cartridge chamber of the gun, by the operation of a single safety button.

1 Claim, 3 Drawing Sheets

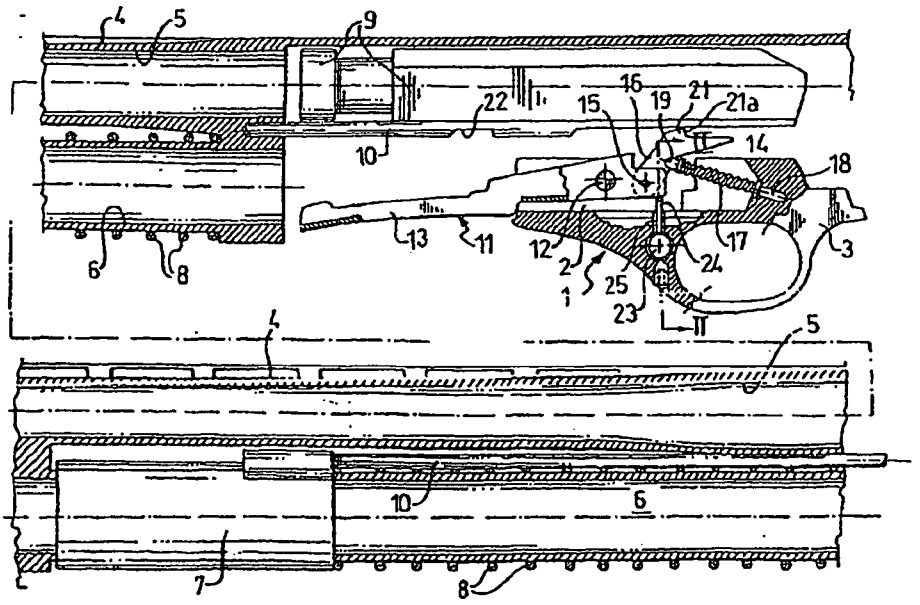

Key?

PR 0183

ET50361

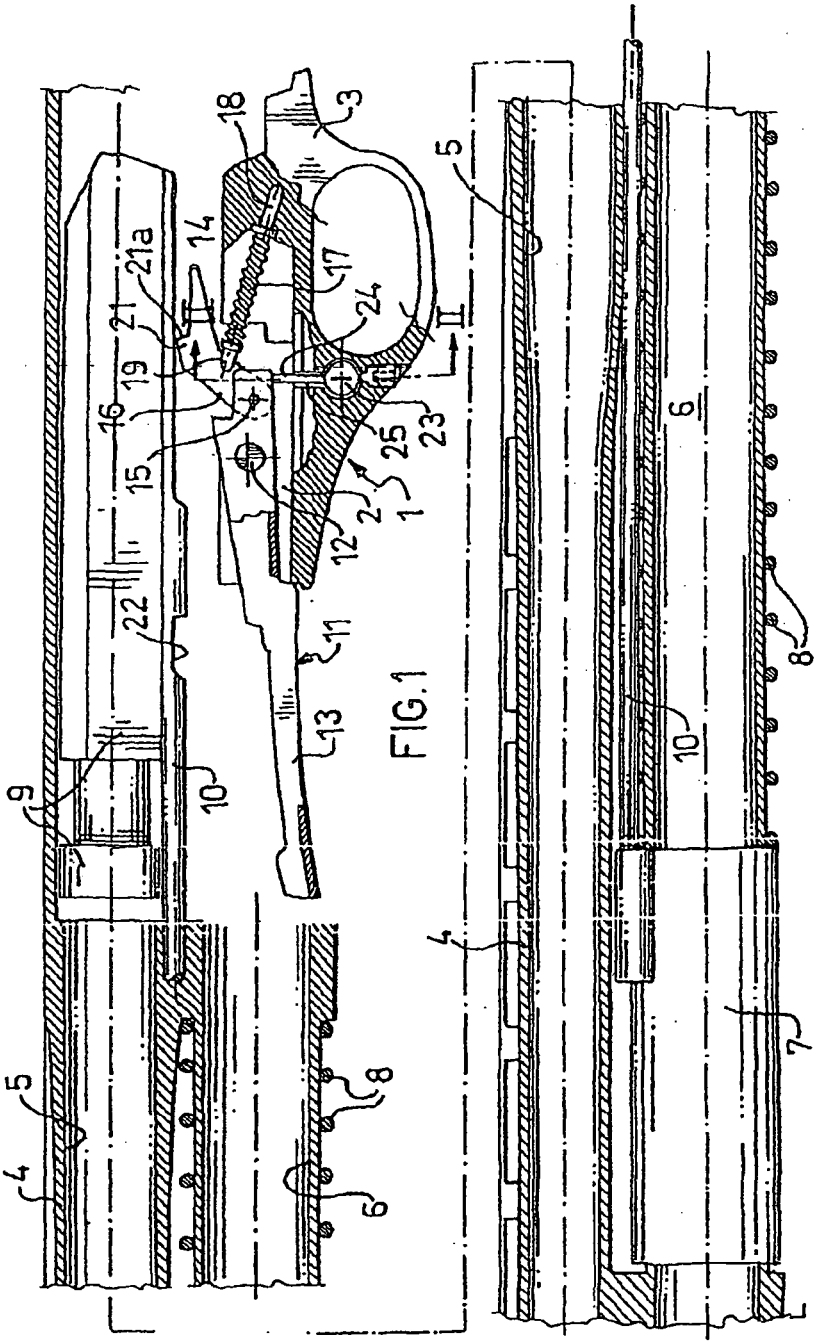

FIG.1

PR 0184

ET50362

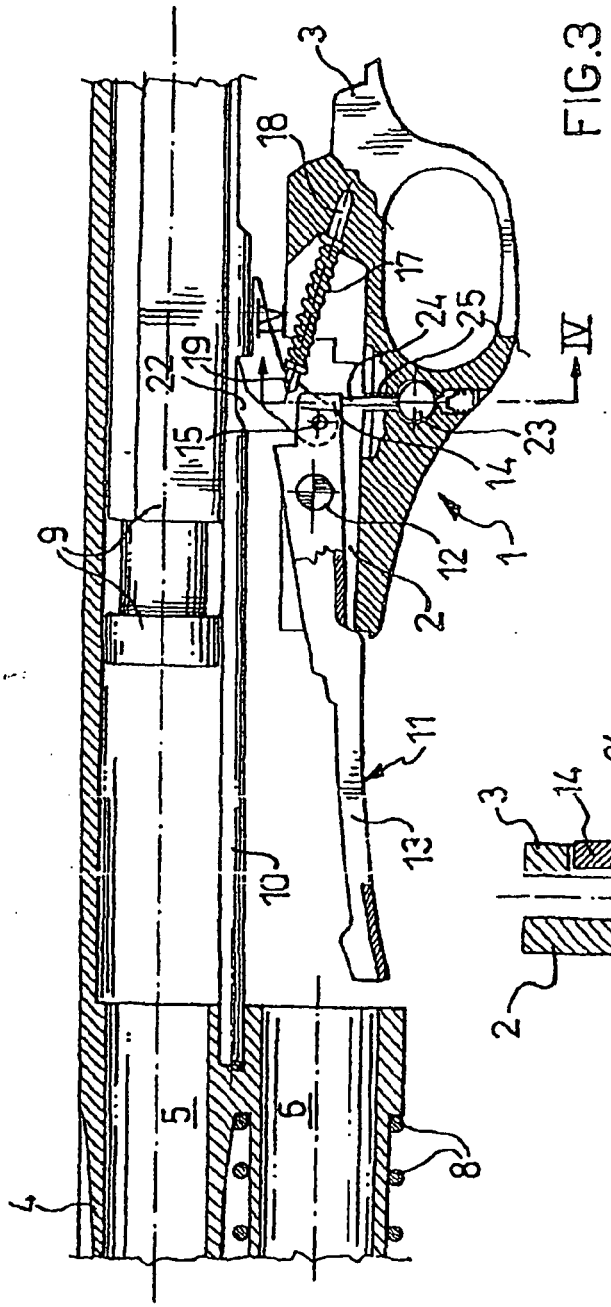

FIG. 3

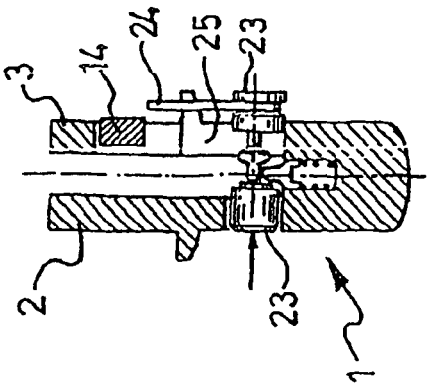

FIG. 2

PR 0185

ET50363

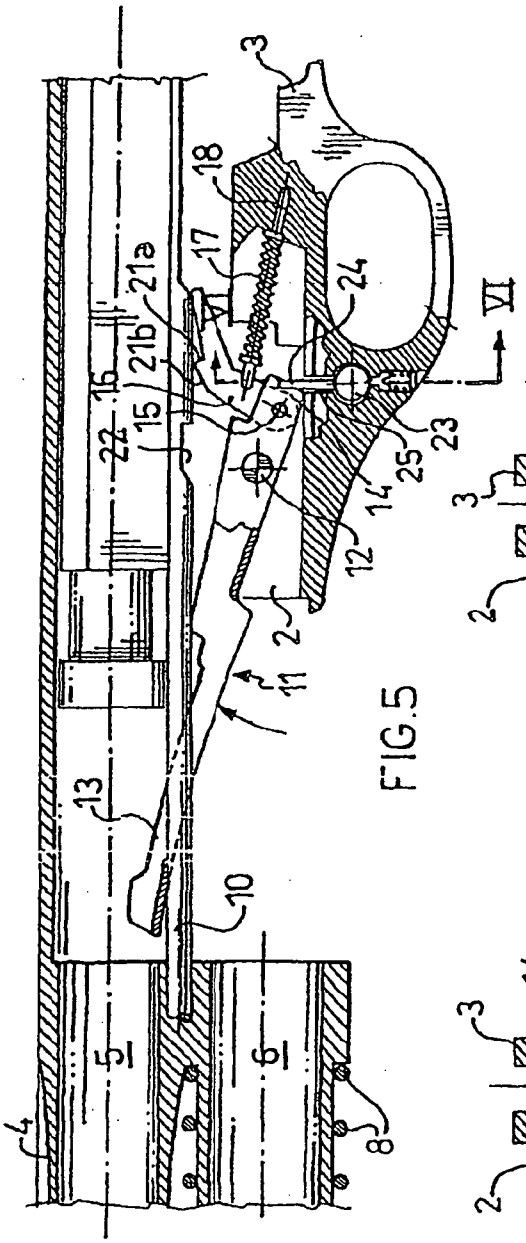

FIG.5

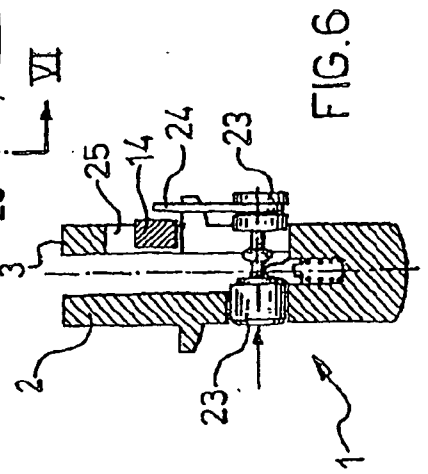

FIG.6

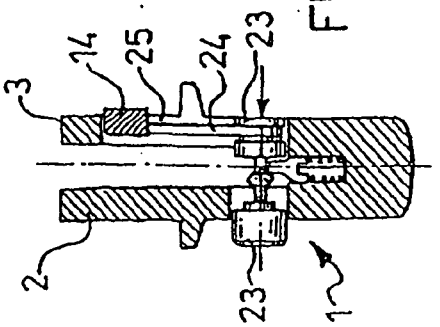

FIG.4

PR 0186

ET50364

SEMI-AUTOMATIC GAS-OPERATED SHOTGUN WITH AN IMPROVED SAFETY DEVICE

BACKGROUND OF THE INVENTION

The present invention relates to a semi-automatic gas-operated shotgun.

It is known that a shotgun of the type in question comprises a receiver for housing and supporting the firing mechanisms of the gun, a breech block guided for movement from a position in which a respective cartridge chamber is closed to a position in which the cartridge chamber is open, and a lifting device for transporting cartridges from a cartridge magazine to the cartridge chamber, the lifting device being constituted essentially by a lever articulated to opposed walls of the receiver and having a longer, substantially elongate-spoon-shaped portion extending towards the cartridge magazine and a shorter portion known as a lug extending towards the interior of the receiver.

As for all firearms of the aforesaid type, it is known for the shotgun considered herein to have a safety device or, more simply: a safety catch, generally constituted by a button-like element extending through the receiver, supported for sliding by the opposed walls thereof, and accessible from outside the walls in order to be moved manually from an engaged position in which it interferes positively with the firing mechanisms, preventing their operation, to a released position in which the firing mechanisms can be operated freely.

In particular, the present invention relates to a safety device having improved structural and functional characteristics for a semi-automatic shotgun.

With reference to shotguns of the aforesaid type, it is known that there is a need to be able to gain access to the cartridge chamber in order to change the cartridge loaded therein for another of a different type.

For this purpose, it is necessary to move the breech-block slide and then to restrain it in the open position in which it is normally restrained only when all of the cartridges have been fired.

At the moment, in order to change the cartridge, the user has to retract the breech block with one hand, and to hold the breech block in the open position with the other hand with which he is supporting the gun, and the cartridge, which is expelled automatically from the cartridge chamber by the action of the ejector, may fly out. Still holding the breech block in the open position manually, the user then has to insert the new cartridge and finally close the cartridge chamber by releasing the breech block.

It is clear and is recognized that, although this procedure has the advantage of quick cartridge-changing, which is much appreciated during shooting, on the other hand it still requires experience and a high degree of manual dexterity and, in spite of all this, still involves a high risk.

The technical problem which the present invention proposes to solve is to overcome this disadvantage

SUMMARY OF THE INVENTION

This problem is solved according to the invention by a semi-automatic gas-operated shotgun comprising a safety device having the characteristics set out in the following claims.

BRIEF DESCRIPTION OF TH DRAWINGS

The characteristics ar advantages the invention will become clearer from n following 'c-ription of an

embodiment of a safety device according to the invention, given with reference to the appended drawings, provided purely by way of non-limiting example, in which:

FIG. 1 shows schematically a detail of a semi-automatic shotgun incorporating a safety device according to the invention, in one operative stage,

FIG. 2 is a section taken on the line II—II of FIG. 1, on an enlarged scale,

FIG. 3 shows schematically the same detail as FIG. 1, in a second operative stage,

FIG 4 is a section taken on the line IV—IV of FIG 3, on an enlarged scale,

FIG. 5 shows schematically the same detail as FIG. 1, in a third operative stage, and

FIG. 6 is a section taken on the line VI—VI of FIG. 5, on an enlarged scale.

DETAILED DESCRIPTION OF THE PREFERRED EMBODIMENT

With reference to the drawings, a semi-automatic gas-operated shotgun, of the type considered above, comprises:

a receiver 1 having opposed walls 2, 3 between which the firing mechanisms of the gun, which are not shown because they are known and wholly conventional, are housed and supported,

a barrel 4 in the breech end of which a cartridge chamber 5 is formed,

a cartridge magazine 6 parallel to the barrel 4 and extending beneath it,

a piston 7 mounted slidably on the cartridge magazine 6 by which it is guided for movement in opposition to a spring 8,

a breech-block slide 9 operated by arming rods 10 fixed to the piston 7 at one end and to the breech-block slide 9 at the other end: the breech-block slide 9 is guided for movement from a position in which the cartridge chamber 5 is closed (FIG. 1) to a position in which it is open (FIG. 3),

a lifting device 11 for transporting cartridges from the cartridge magazine 6 to the cartridge chamber 5; this lifting device 11, which is also known as a transporter, is constituted, essentially, by a lever articulated at 12 to the opposed walls 2, 3 of the receiver 1 and having an elongate substantially spoon-shaped portion 13 extending from the articulation point 12 towards the cartridge chamber 5, and a shorter portion 14 known as the lug of the lifting device extending from the articulation point 12 towards the interior of the receiver 1. The lifting device 11 is movable angularly about the articulation point 12 from a lowered position for collecting a cartridge from the magazine 6 (FIG. 1) to a raised position (FIG. 5) in which it has brought a cartridge substantially into alignment with the cartridge chamber 5 in which it is to be inserted automatically by the breech-block slide.

A lever 16 is articulated to the lug 14 of the lifting device 11 with an articulation axis 15 parallel to that of the lifting device. This lever 16 is subject to the action of a spring 17, the spring-guide rod 18 of which has a rounded head 19 engaged in a hemispherical recess in the rear of the lever 16. On the front of the lever 16 there is a tooth 21 which has a leading edge 21*a* facing towards the breech and a trailing edge 21*b* inclined towards the muzzle of the gun. The tooth 21 (otherwise known as the pin of the lifting device) is intended to engage a respective notch 22 formed in an arming rod 10 of the breech-block slide 4

PR 0187

ET50365

A safety button 23 extending transversely through the receiver 1 is supported for sliding by the opposed walls 2, 3 thereof in a position below the articulation axis 12 of the lifting device 11 and spaced therefrom. The safety button 23 is accessible from outside the walls 2, 3 in order to be moved from an engaged position (FIGS. 1 and 3) in which it interferes with the firing mechanisms in known manner, preventing their operation, to a released position in which the firing mechanisms can be operated freely.

A rigid, rod-shaped element 24 is fixed to the safety button 23 close to an end thereof and projecting sideways from the button.

The position of this rod-shaped element 24 on the button 23 and its length are such that it is guided for moving through a slit or slot 25 formed in the wall 3 of the receiver 1 from a first position (safety button engaged) in which it is beneath and in contact with the lug 14 of the lifting device 11 (when the spoon-shaped portion 13 thereof is in the "lowered" position) to a second position (safety button released), in which it is moved away from its position beneath the lug 14

The functions of the safety device 23–24 of the present invention will now be described.

In an initial condition (FIG. 1), the shotgun is ready to fire.

In this condition, the breech-block slide 9 is in a position such as to close the cartridge chamber 5 in which a first cartridge (not shown) is loaded; the lifting device 11 is in the position in which its spoon-shaped portion 13 is "lowered", ready to collect a second cartridge from the cartridge magazine 6; the safety button 23 is in the released position, and its rod-shaped element 24 is moved away from the lug 14 of the lifting device 11.

It should be noted that, in this initial condition, the safety button 23 can be moved from the engaged position to the released position and vice versa at will, correspondingly positioning the rod-like element 24 beneath and away from the lug 14 of the lifting device 11

The initial condition having been considered, it is assumed that the cartridge which is in the chamber 5 is to be changed for another of a different type.

For this purpose (FIGS. 3 and 4), the safety button 23 and its rod-shaped element 24 are first moved to the engaged position in order to lock the firing mechanisms and simultaneously to lock the lifting device 11 in the position described above (the rod-shaped element 24 is positioned beneath the lug 14 of the lifting device).

The breech-block slide 9 is then retracted manually, overcoming the resistance of the spring 8, to the open position in which it is then restrained by the tooth or pin 21 acted on by its spring 17 which has snap-engaged it in the notch 22 of the arming rod 10.

Since the rod-shaped element 24 of the safety button 23 prevents the lifting device 11 from moving angularly about the articulation axis 12, the breech-block slide 9 remains positively locked on the lifting device.

During the retraction of the breech-block slide 9, the first, loaded cartridge is extracted from the cartridge chamber 5 and automatically expelled therefrom.

At this point, after the desired cartridge of a different type has been arranged manually in the cartridge chamber 5, the safety button 23 is moved to the released position, the rod-shaped element 24 simultaneously being moved away from its position beneath the lug 14. The lifting device 11 is now free to move angularly about its articulation axis 12 which movement is provided for by the spring 8 which returns the breech block 9 to the position in which the cartridge chamber 5 is closed

The shotgun is ready to fire again or for "double safety" to be set: that is, safety with regard to the firing mechanisms and with regard to the lifting device 11.

It is clear from the foregoing description that the safety device 23–24 of the invention for a semi-automatic shotgun enables two different and important functions to be performed simultaneously by a single operation on a single "button": that is, locking of the firing mechanisms of the gun and positive restraint of the breech-block slide in the open position, thus affording easy and safe access to the cartridge chamber and hence permitting easy changing of the cartridge present therein for another of a different type.

Another important advantage is that it is not possible to hold the slide open without the firing mechanisms being locked, that is, without the safety device being engaged.

A further advantage is that the device 23–24 of the invention is simple and inexpensive to produce and to fit.

What is claimed is:

1. A semi-automatic gas-operated shotgun, including a receiver for housing and supporting the firing mechanisms of the gun, a breech-block slide movable from a position in which a cartridge chamber is closed to a position in which the chamber is open, a lifting device articulated to the receiver and movable angularly from a lowered, cartridge-collecting position to a raised position for supplying the cartridge to the chamber, means associated with the lifting device for locking the breech-block slide open when the lifting device is in the lowered position, a safety button supported for moving through the receiver from an engaged position for locking the firing mechanisms to a released position, the semi-automatic gas-operated shotgun comprising a rigid rod-shaped element fixed to the safety button, projecting sideways therefrom and fixed for translation therewith, the rod-shaped element being positioned like a wedge beneath the lifting device in the lowered position, locking it in this position when the safety button is moved to the engaged position

* * * * *

PR 0188

ET50366

Fig. 1.

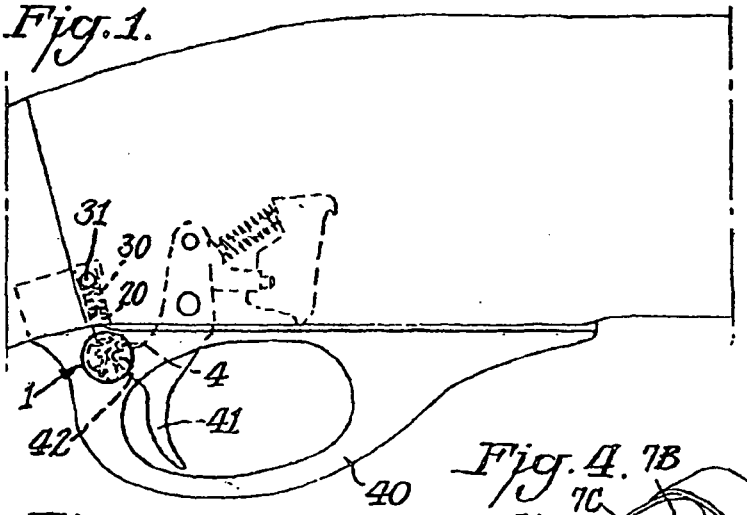

Fig. 2.

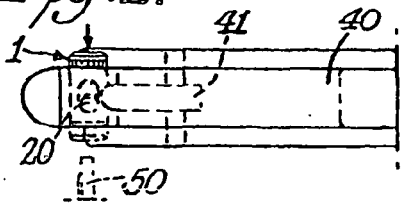

Fig. 4.

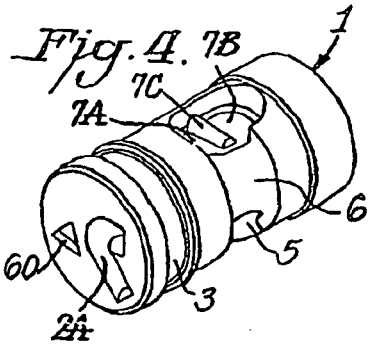

Fig. 3.

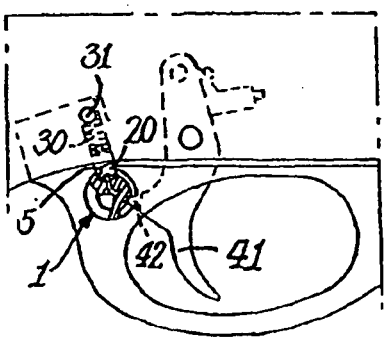

Fig. 5.

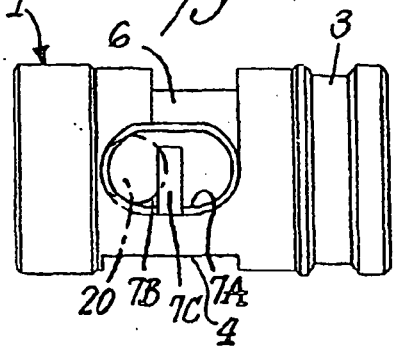

PR 0189

ET50367

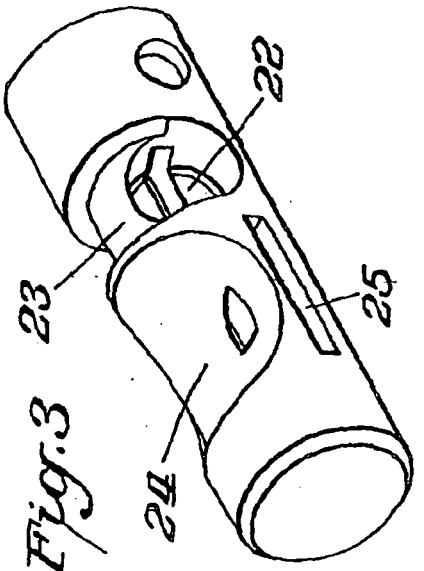

Fig.3

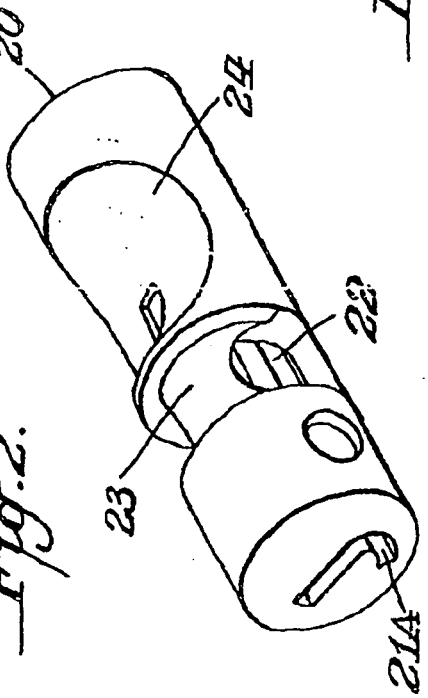

Fig.2.

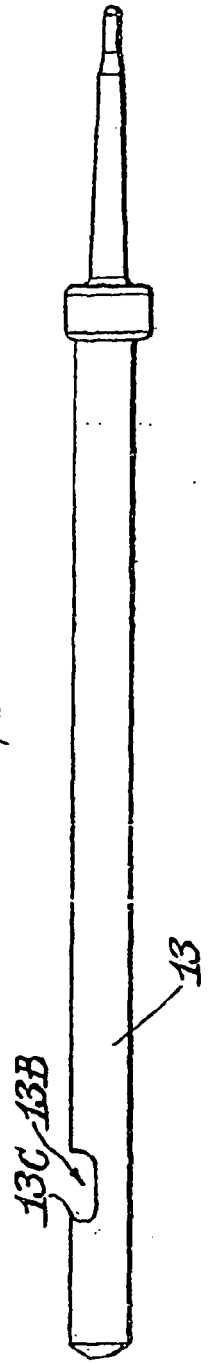

Fig. 4.

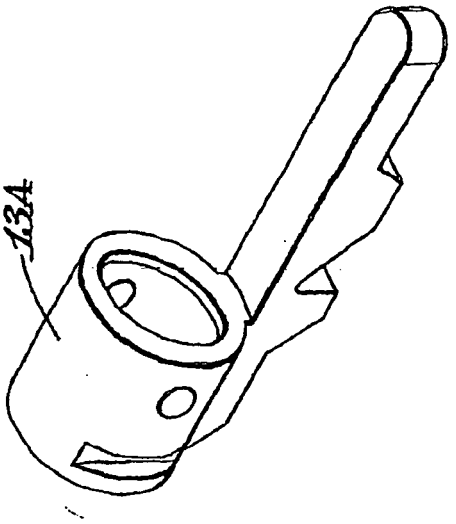

Fig. 5.

PR 0191

ET50369

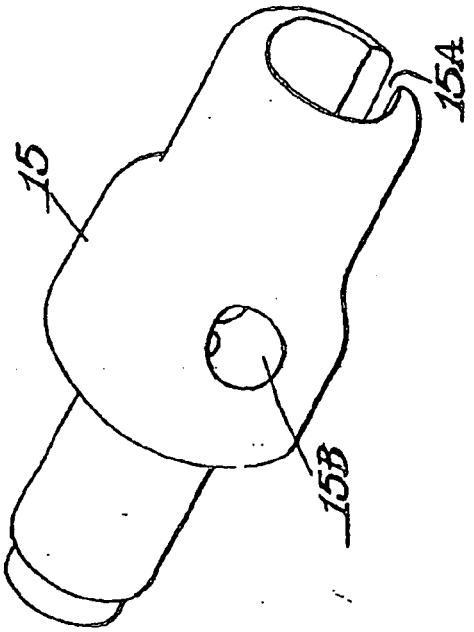

Fig. 7.

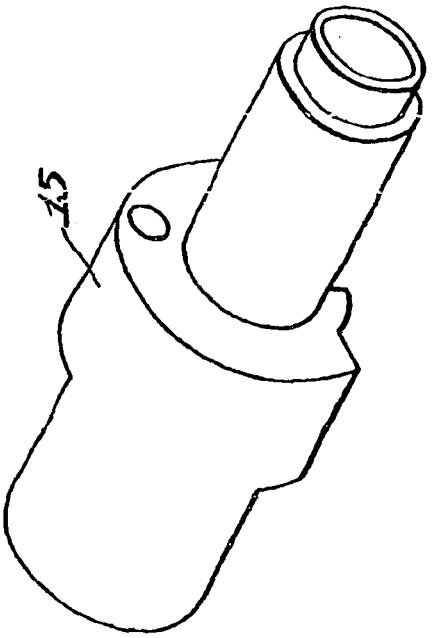

Fig. 6.

PR 0192

ET50370

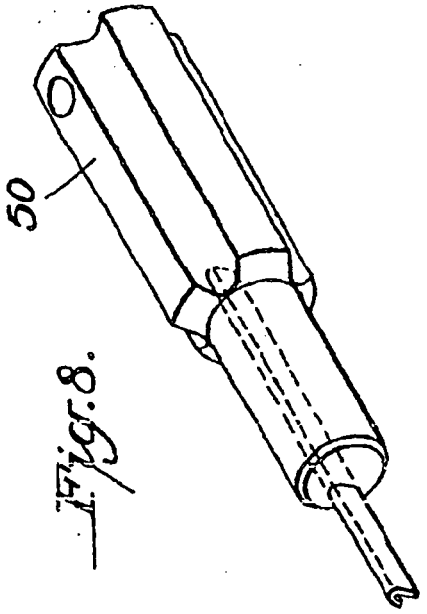

Fig. 8.

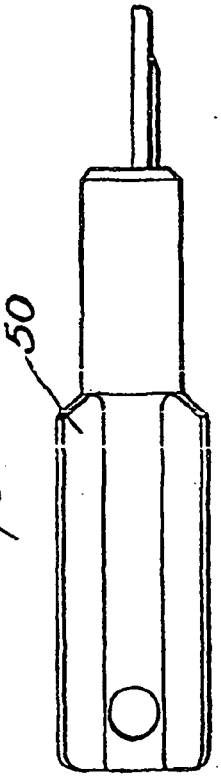

Fig. 9.

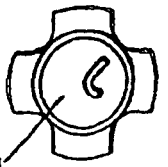

Fig. 10.

PR 0193

ET50371

LOCKING MECHANISM FOR FIREARMS

BACKGROUND OF THE INVENTION

This invention relates generally to locking mechanisms for use in firearms and more particularly to a lock that blocks the firing pin of a firearm. The invention is particularly suitable for blocking the firing pin of a bolt action firearm. Regardless of the type of firearm in which the present invention is incorporated, it provides an additional means by which firearms can be secured to deter unauthorized use.

SUMMARY OF THE INVENTION

The various embodiments of the locking mechanisms of the present invention provide an integral device that can assist in deterring unauthorized use of a firearm by providing a lock that can be activated to prevent the firing pin from moving.

Specifically, the present invention provides a firearm having a firing pin and a locking mechanism comprising: a lock button, rotatable between an unlocked position, wherein the lock button permits movement of the firing pin, and a locked position, wherein the lock button prevents movement of the firing pin, wherein the lock button comprises a longitudinal axis, a surface, and a first end and a second end, and: i. a locking aperture formed along the longitudinal axis of the button and comprising a female receiving end formed in the first end of the button; ii. a notch formed in the surface of the button between the first and second ends of the button; and iii. a plunger aperture formed in the surface of the button between the first and second ends of the button, and wherein the locking mechanism further comprises a detent plunger and a locking means for insertion into the female receiving end of the locking aperture of the safety button, and wherein the plunger aperture is connected to the locking aperture, and wherein the firing pin has a notch formed therein positioned and configured to interact with the notch of the lock button.

The present invention also provides a bolt action firearm having a bolt assembly comprising a hollow bolt body, a bolt handle, a bolt plug, a firing pin and firing pin spring within the bolt body, and a locking mechanism comprising a lock button having a longitudinal axis, a surface, and a first end and a second end, and comprising: i. a locking aperture formed along the longitudinal axis of the button and comprising a female receiving end formed in the first end of the button; ii. a notch formed in the surface of the button between the first and second ends of the button; and iii. a plunger aperture formed in the surface of the button between the first and second ends of the button and connected to the locking aperture, and wherein the locking mechanism further comprises a detent plunger, and a locking means for insertion into the female receiving end of the locking aperture of the safety button, and wherein the lock button is moveable among a locked and an unlocked position, and wherein the firing pin has a notch formed therein positioned and configured to interact with the notch of the lock button to permit movement of the firing pin when the lock button is in the unlocked position and to prevent movement of the firing pin when the lock button is in the locked position.

In addition, the present invention provides a firearm having a firing pin and a locking mechanism comprising: A. a lock button having a longitudinal axis, a surface, a first end and a second end, and comprising: i. a locking aperture formed along a the longitudinal axis of the button comprising a female receiving end formed in the first end of the button; ii. a notch formed in the surface of the button between the first and second ends of the button; iii. a plunger aperture formed in the surface of the button between the first and second ends of the button, extending substantially transverse to the longitudinal axis of the button toward the central axis of the button and connecting with the substantially longitudinal locking aperture; iv. a plunger channel formed in the surface of the button between the first and second ends thereof, and connected to the plunger aperture; B. a detent plunger; C. a spring positioned to bias the detent plunger towards the lock button and into a position where the detent plunger interacts with the plunger aperture and plunger channel; and D. a key adapted for insertion into the female receiving end of the locking aperture of the button, wherein the key is adapted to interact with the plunger aperture when inserted into the female receiving end; and wherein the firing pin has a notch formed therein and adapted to interact with the notch of the lock button.

BRIEF DESCRIPTION OF THE DRAWINGS

FIG. 1 is an exploded view of a firearm action showing a receiver, exploded bolt assembly, and one embodiment of a locking mechanism of the present invention.

FIG. 2 is a right side elevational view of one embodiment of a lock button of the present invention.

FIG. 3 is a left side elevational view of the lock button shown in FIG. 2.

FIG. 4 is a side elevational view of a firing pin that can be used in firearms having a locking mechanism of the present invention.

FIG. 5 is a side elevational view of a firing pin head that can be used with the firing pin in FIG. 4 and in firearms having a locking mechanism of the present invention.

FIG. 6 is a right side elevational view of a bolt plug that can be used in a firearm having a locking mechanism of the present invention.

FIG. 7 is a left side elevational view of a bolt plug that can be used in a firearm having a locking mechanism of the present invention.

FIG. 8 is a side elevational view of a locking means of the present invention.

FIG. 9 is a top plan view of the locking means of FIG. 8.

FIG. 10 is a front plan view of the locking means of FIG 8.

DETAILED DESCRIPTION OF THE INVENTION

The present invention will be more fully understood by reference to the drawings, which show one preferred embodiment of a locking mechanism of the present invention. Variations and modifications of this embodiment can be substituted without departing from the principles of the invention, as will be evident to those skilled in the art.

The locking mechanism shown in the figures is one preferred embodiment of the present invention, adapted for use in a bolt action firearm. This embodiment can be adapted for use in a wide variety of bolt action firearms, as will be evident to those skilled in the art. As shown in the figures, a preferred embodiment of a locking mechanism of the present invention is adapted for use with a firearm having a specific type of bolt assembly, however, the invention is not limited to such types of bolt assemblies.

In the figures, the firearm (not shown) comprises a bolt assembly 10. As is typical, the bolt assembly is slidably mounted in the receiver 2 of the firearm, and can be removed

from the receiver. Also typical of many such bolt assemblies, the bolt assembly shown in the figures is also rotatable, typically when in the closed position, where it can be rotated from the closed position to the closed and locked position. When in the closed and locked position, the firearm is ready to fire a round of ammunition within the chamber, not shown.

The bolt assembly 10 comprises a bolt body 11 and a bolt handle (not shown) attached thereto to provide a means of rotating the bolt assembly and for sliding the bolt assembly. The bolt handle is typically attached to some part of the bolt assembly, preferably the bolt body. A firing pin 13 is moveable within the bolt body and is urged forward by a firing pin spring (not shown). A firing pin head 13A at the rear of the firing pin is adapted to interact with the fire control mechanism or trigger assembly to cock the firing pin by urging it against the firing pin spring, and to allow for the release of the firing pin upon trigger pull. The firing pin and firing pin spring are retained within the bolt body by a bolt plug 15. The bolt plug 15 is a hollow cylinder, open at its forward end where it connects with the bolt body and closed at its rear end.

The bolt plug is a typical means of retaining the firing pin and firing pin spring within the bolt body, however, other means of retaining these components can be used. Although the bolt plug shown in the figures slides with the bolt assembly, it does not rotate with the bolt body and bolt handle. Other embodiments of the present invention having rotating bolt plugs can also be used according to the present invention.

The bolt plug is threaded to the bolt body, and further comprises a slot 15A, adapted to allow longitudinal movement of the firing pin head. The bolt plug can be attached to the bolt body by various other means, as will be evident to those skilled in the art.

The embodiment of the locking mechanism of the present shown in the figures is adapted to interact with the rear portion of the firing pin, and is thus positioned in the bolt plug, at the rear of the bolt assembly. An aperture 15B is formed in the bolt plug, extending perpendicular to the bolt assembly and connecting with the hollow interior of the bolt plug. The aperture 15B is adapted for insertion of a locking mechanism of the present invention.

The embodiment of the locking mechanism of the present invention shown in the figures comprises a lock button 20, a detent plunger 30, a detent plunger spring 40, and a locking means or key 50.

The lock button 20 has a locking aperture 21 formed along a substantially longitudinal axis of the button and having a female receiving means 21A formed in one end of the button. The locking aperture connects to the plunger aperture 22, which is formed between the two ends of the button and extends substantially transverse to the longitudinal axis of the button towards the center of the button, where it connects with the locking aperture. The plunger aperture 22 is connected to a substantially transverse plunger channel 23. The plunger channel 23, in the embodiment shown, extends circumferentially and is formed in the surface of the button. The interaction of the plunger channel and the detent plunger serves to guide and restrict the rotational movement of the button between the locked and unlocked positions.

The lock button also has a notch 24 formed in the surface thereof, between the two ends of the button. The notch 24 is adapted to allow movement of the firing pin 13 when the button is in the unlocked position, and to prevent movement of the firing pin when the button is in the locked position.

The firing pin 13 has a notch 13B formed therein, positioned to interact with the notch 24 of the lock button. Typically the firing pin does not rotate, and thus the firing pin notch will only move longitudinally with the firing pin. In the embodiment shown in the figures, the firing pin notch always faces up, and when the lock button is in the unlocked position, the two notches are aligned, allowing movement of the firing pin without interference from any portion of the button. When the button is rotated to the locked position, the notch 24 is rotated away from alignment with the firing pin and firing pin notch, and the lock button thus interacts with the firing pin notch to prevent the firing pin from moving longitudinally.

In preferred embodiments of the present invention, as shown in the figures, the lock button further comprises two parallel slots, 25 and 26, that are formed in the surface of the button and oriented along the longitudinal axis of the button. In such embodiments, the firing pin further comprises a tab 13C formed adjacent to the notch 13B. The tab 13C is adapted to interact with either of the slots to prevent movement of the firing pin, and acts as an additional safety measure, to prevent accidental release of the firing pin.

When the detent plunger is in the plunger aperture, the lock button is in the locked position, wherein a portion of the plunger extends through the plunger aperture and into the locking aperture. When the detent plunger is in the plunger aperture, the lock button does not prevent the trigger from being activated, however, it blocks the firing pin from moving forward to strike a round of ammunition, and thus prevents the firearm from being fired.

When the button is in the locked position, it cannot be rotated to the unlocked position until the locking means is inserted into the locking aperture to a position where the locking means contacts the detent plunger and urges it away from the lock button, thus removing the detent plunger from within the plunger aperture and allowing the lock button to be rotated so that the detent plunger interacts with the plunger channel as the button rotates.

In addition to preventing the firing pin from moving and thus preventing the firearm from being used, the present locking mechanism, when the lock button has been rotated to the locked position, prevents the bolt assembly from being cocked. For example, when the lock button has been rotated to the locked position to prevent movement of the firing pin, the bolt assembly cannot be rotated to cock the firing pin because the firing pin cannot move relative to the bolt body, and thus the firearm cannot be cocked. It is preferred that the locking mechanism be used to lock the firearm when the bolt is in the open position, so that, as described above, the bolt cannot be closed and the firearm cannot be cocked.

The locking mechanisms of the present invention can also be used to lock the firing pin of a bolt action firearm when the bolt is in the closed position. When in the closed position, the firing pin is typically cocked and held in place by the interaction of the firing pin head and the sear (not shown), a component of the trigger assembly/fire control. When the lock button is rotated to the locked position, the firing pin is prevented from moving by the button even if the trigger is pulled and the firing pin head is released from its interaction with the sear. In such circumstances, the bolt assembly cannot be opened because the firing pin is prevented from moving with respect to the bolt body, and thus the firearm cannot be loaded with a round of ammunition, assuming there is no round of ammunition within the chamber of the firearm.

As shown in the Figures, the preferred lock button 20 of the present invention is substantially cylindrical in shape. A

substantially cylindrical shape is preferred for aesthetic reasons and for ease in incorporating the present invention into various types of firearms, however, other shapes and configurations are within the scope of the present invention and will be evident to those skilled in the art, depending on the overall configuration of the firearm for which the present locking mechanism will be used.

Embodiments of the key 50 shown herein include one preferred locking means adapted for insertion into the female receiving end of the locking aperture. Other locking means can include a wire or rod and a blade. Although a wide variety of locking means can be used, a key is preferred. The key is adapted for insertion into the locking aperture, extending a sufficient distance into the aperture so as to be positioned to interact with the detent plunger 20 when the detent plunger is positioned within the plunger aperture. The preferred key has a beveled tip, as shown in FIGS. 1 and 8–10. The beveled tip is adapted to interact with the detent plunger as the key is fully inserted into the locking aperture, urging the plunger away from the lock button and out of the plunger aperture and allowing the safety button to be rotated out of the locked position to the unlocked position.

The key can comprise a variety of handles, including the cylindrical handle shown in FIGS. 8–10.

It is preferred that the key have high torsional strength, yet also have a thin cross section to make the key difficult to copy. A thin key will also deter the use of paper clips and other readily available articles from being used to "pick" the locking mechanism. Many known means of imparting torsional strength can be used, including selecting a suitable material. In addition, the key can be configured to increase its torsional strength. For example, the key can be formed from a piece of metal which has been bent, the bend providing rigidity and torsional strength. As shown in the Figures, preferred keys can have a "j" shaped cross section, showing one possible way of providing a key having high torsional strength. Other cross sectional configurations will also impart torsional strength to the key, as will be evident to those skilled in the art.

The various embodiments of the locking mechanisms of the present invention are adaptable with minor modifications to a wide variety of firearms.

I claim:

1. A firearm having a firing pin and a locking mechanism comprising:

a lock button, rotatable between

an unlocked position, wherein the lock button permits movement of the firing pin, and

a locked position, wherein the lock button prevents movement of the firing pin.

wherein the lock button comprises a longitudinal axis, a surface, and a first end and a second end, and;

i. a locking aperture formed along the longitudinal axis of the button and comprising a female receiving end formed in the first end of the button,

ii. a notch formed in the surface of the button between the first and second ends of the button; and

iii. a plunger aperture formed in the surface of the button between the first and second ends of the button, and

wherein the locking mechanism further comprises a detent plunger, and a locking means for insertion into the female receiving end of the locking aperture of the safety button, and

wherein the plunger aperture is connected to the locking aperture, and

wherein the firing pin has a notch formed therein positioned and configured to interact with the notch of the lock button.

2. A firearm having a locking mechanism of claim 1 wherein the plunger aperture extends substantially transverse to the longitudinal axis of the button toward the central axis of the button to connect with the longitudinal locking aperture.

3. A firearm having a locking mechanism of claim 1 wherein the locking means is adapted to interact with the plunger aperture when inserted into the female receiving end.

4. A firearm having a locking mechanism of claim 1 wherein the detent plunger is urged towards the safety button by a spring.

5. A firearm having a locking mechanism of claim 1 further comprising a rotational position indicator formed on one end of the lock button.

6. A firearm having a locking mechanism of claim 1 wherein the locking means is a key.

7. A firearm having a locking mechanism of claim 6 wherein the key has a substantially "J" shaped cross sectional configuration.

8. A firearm having a locking mechanism of claim 1 wherein the locking means is a key adapted to urge the detent plunger away from the lock button when the key is inserted into the locking aperture.

9. A firearm having a locking mechanism of claim 8 wherein the locking means is adapted to interact with the plunger aperture only when the locking means is fully inserted into the female receiving end.

10. A firearm having a locking mechanism of claim 1 wherein the lock button further comprises at least one longitudinal slot and the firing pin further comprises a tab adapted to interact with the at least one slot to prevent movement of the firing pin.

11. A firearm having a locking mechanism of claim 10 wherein the lock button comprises two parallel longitudinal slots and the firing pin further comprises a tab adapted to interact with either slot to prevent movement of the firing pin.

12. A bolt action firearm having

a bolt assembly comprising a hollow bolt body, a bolt handle, a bolt plug, a firing pin and firing pin spring within the bolt body, and

a locking mechanism comprising a lock button having a longitudinal axis, a surface, and a first end and a second end, and comprising;

i. a locking aperture formed along the longitudinal axis of the button and comprising a female receiving end formed in the first end of the button;

ii. a notch formed in the surface of the button between the first and second ends of the button; and

iii. a plunger aperture formed in the surface of the button between the first and second ends of the button and connected to the locking aperture, and

wherein the locking mechanism further comprises a detent plunger, and a locking means for insertion into the female receiving end of the locking aperture of the safety button, and

wherein the lock button is moveable among a locked and an unlocked position, and

wherein the firing pin has a notch formed therein positioned and configured to interact with the notch of the lock button to permit movement of the firing pin when the lock button is in the unlocked position and to

PR 0196

ET50374

prevent movement of the firing pin when the lock button is in the locked position.

13. A firearm of claim 12 wherein the locking mechanism is positioned within the bolt assembly.

14. A firearm of claim 13 wherein the locking mechanism is positioned within the bolt plug.

15. A firearm of claim 12 further comprising a receiver wherein the bolt assembly is moveably mounted, and wherein the locking mechanism is positioned in the receiver, and wherein the lock button is positioned to contact the bolt assembly to prevent movement thereof when the lock button is in the locked position, and wherein the lock button is positioned to permit movement of the bolt assembly when in the unlocked position.

16. A firearm of claim 12 further comprising a receiver wherein the bolt assembly is moveably mounted, and wherein the locking mechanism is positioned in the receiver, and wherein the lock button is positioned to contact the bolt assembly and the firing pin to prevent movement thereof when the lock button is in the locked position, and wherein the lock button is positioned to permit movement of the bolt assembly and firing pin when in the unlocked position.

17. A firearm of claim 12 wherein the lock button further comprises at least one longitudinal slot formed therein and the firing pin further comprises a tab adapted to interact with the at least one slot to prevent movement of the firing pin.

18. A firearm of claim 17 wherein the lock button comprises two parallel longitudinal slots and the firing pin further comprises a tab adapted to interact with either slot to prevent movement of the firing pin.

19. A firearm having a firing pin and a locking mechanism comprising:

A. a lock button having a longitudinal axis, a surface, a first end and a second end, and comprising:

i. a locking aperture formed along the longitudinal axis of the button comprising a female receiving end formed in the first end of the button;

ii. a notch formed in the surface of the button between the first and second ends of the button;

iii. a plunger aperture formed in the surface of the button between the first and second ends of the button, extending substantially transverse to the longitudinal axis of the button toward the central axis of the button and connecting with the substantially longitudinal locking aperture;

iv. a plunger channel formed in the surface of the button between the first and second ends thereof, and connected to the plunger aperture;

B. a detent plunger;

C. a spring positioned to bias the detent plunger towards the lock button and into a position where the detent plunger interacts with the plunger aperture and plunger channel; and

D. a key adapted for insertion into the female receiving end of the locking aperture of the button, wherein the key is adapted to interact with the plunger aperture when inserted into the female receiving end; and

wherein the firing pin has a notch formed therein and adapted to interact with the notch of the lock button.

20. A firearm having a locking mechanism of claim 19 wherein the detent plunger interacts with the plunger channel to retain the lock button and to define and restrict the rotational movement of the button.

21. A firearm having a locking mechanism of claim 19 wherein the key has a substantially curved cross sectional configuration.

22. A firearm of claim 19 wherein the lock button further comprises at least one longitudinal slot formed therein and the firing pin further comprises a tab adapted to interact with the at least one slot to prevent movement of the firing pin.

23. A firearm of claim 22 wherein the lock button comprises two parallel longitudinal slots and the firing pin further comprises a tab adapted to interact with either slot to prevent movement of the firing pin.

* * * * *

PR 0197

ET50375

PR 0198

ET50376

US006256917B1

(12) **United States Patent**
Findlay

(10) **Patent No.: US 6,256,917 B1**
(45) **Date of Patent: Jul. 10, 2001**

(54) **LOCKABLE SAFETY FOR FIREARMS**

(75) Inventor: David S. Findlay, Mohawk, NY (US)

(73) Assignee: RA Brands, L.L.C., Madison, NC (US)

(*) Notice: Subject to any disclaimer, the term of this patent is extended or adjusted under 35 U.S.C. 154(b) by 0 days.

(21) Appl. No.: 09/353,981

(22) Filed: Jul. 15, 1999

(51) Int. Cl.[7] F41A 17/00
(52) U.S. Cl. 42/70.06; 42/70.11
(58) Field of Search 42/70.06, 70.01

(56) **References Cited**

U.S. PATENT DOCUMENTS

2,000,858	*	5/1935	Maxwell	42/70
2,225,583	*	12/1940	Blizard	42/70.11
2,599,132	*	6/1952	Sass	42/70
2,664,658	*	1/1954	Bjorklund	42/70
2,675,638	*	4/1954	Crittendon	42/69
2,856,718		10/1958	Fischer	42/70
3,462,869	*	8/1969	Wallace	42/70
3,553,877	*	1/1971	Welch et al.	42/70
3,673,725		7/1972	Cravener	42/70
3,882,622	*	5/1975	Perlotto	42/1
4,133,128	*	1/1979	Brush	42/70
4,719,713	*	1/1988	Hagle	42/1.01
4,726,136		2/1988	Domaus et al.	42/70.08
4,754,568	*	7/1988	Brandt	42/70.06
5,068,990		12/1991	Marzocco	42/70.04
5,417,001	*	5/1995	Roussean	42/70.08
5,467,550		11/1995	Mumbleau	42/70.11
5,671,560		9/1997	Meller	42/70.11
5,867,928	*	2/1999	Plebani	42/17
5,910,003		6/1999	Kleinpaul	42/70.11
6,141,896	*	11/2000	Oberst	42/70.06

FOREIGN PATENT DOCUMENTS

4303333 6/1994 (DE) .

* cited by examiner

Primary Examiner—Charles T. Jordan
Assistant Examiner—Denise J Buckley
(74) *Attorney, Agent, or Firm*—Huntley & Associates

(57) **ABSTRACT**

A lockable safety mechanism for use in a wide variety of firearms and moveable among a safe position, a fire position, and a safe and locked position.

11 Claims, 3 Drawing Sheets

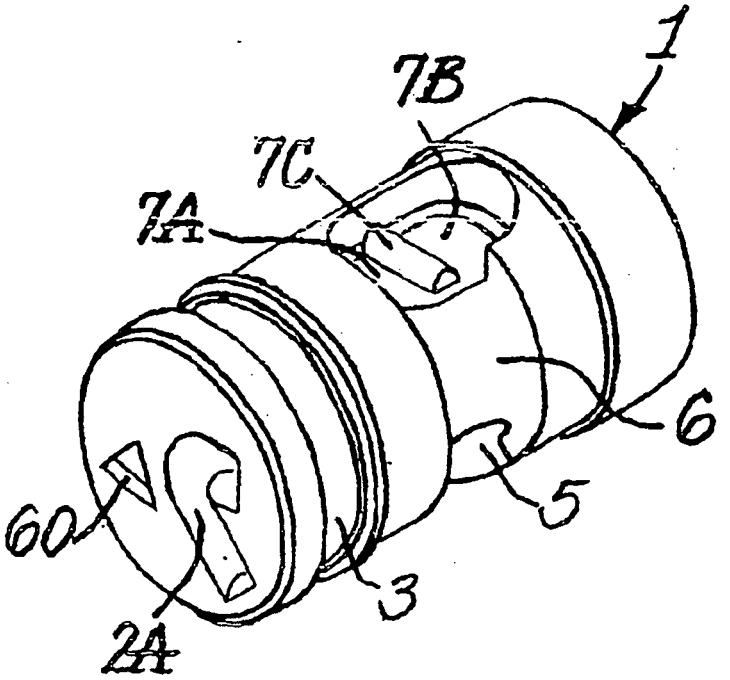

PR 0199

US005671560A

United States Patent [19]

Meller

[11] Patent Number: 5,671,560

[45] Date of Patent: Sep. 30, 1997

[54] FIREARM WITH SAFETY DEVICE

[75] Inventor: Yehuda Meller, Holon, Israel

[73] Assignees: Binyamin Yirmiyahu; Mordechai Yirmiyahu, both of Israel; part interest to each

[21] Appl. No.: 728,452

[22] Filed: Sep. 30, 1996

Related U.S. Application Data

[63] Continuation-in-part of Ser. No. 372,761, Jan. 13, 1995, Pat. No. 5,581,927.

[51] Int. Cl.[6] F41A 17/00

[52] U.S. Cl. 42/70.11; 42/70.01; 42/66; 42/70.06; 42/70.08

[58] Field of Search 42/70.11, 70.01, 42/66, 70.06, 70.08; 89/148

[56] References Cited

U.S. PATENT DOCUMENTS

774,712	11/1904	Vold .	
2,945,316	7/1960	Mulno	42/66
3,462,869	8/1969	Wallace	42/70
3,673,725	7/1972	Cravener	42/1 R
4,261,127	4/1981	Kudkaines	42/1 LP
4,321,764	3/1982	Wilhelm	42/69 B
4,384,420	5/1983	Von Muller	42/1 LP
4,532,729	8/1985	Von Muller	42/1 LP
4,833,811	5/1989	Wilkinson	42/70.08
4,926,575	5/1990	Pastor	42/70.06
4,972,618	11/1990	Justice, Sr. et al.	42/70.11
5,081,779	1/1992	Pack	42/70.11
5,235,763	8/1993	Noalor et al.	42/70.11
5,361,525	11/1994	Bowes	42/70.11

FOREIGN PATENT DOCUMENTS

WO82/03120	9/1982	WIPO .
WO91/14146	9/1991	WIPO .

Primary Examiner—Charles T. Jordan
Assistant Examiner—Moeua Chelliah
Attorney, Agent, or Firm—Benjamin Batish

[57] ABSTRACT

A firearm including a frame having a grip for manually grasping the firearm, a control member movable to enable firing the firearm, a locking device including a latch element movable by an inserted key either to a locking position or to a releasing position, and a locking member movably carried by the frame. A spring urges the locking member into contact with the control member such that the locking member moves with the control member to enable firing the firearm. The locking member is located with respect to the latch element of the locking device so as to be engaged thereby when the latch element is in its locking position, to block the movement of the locking member, and thereby to prevent the firing of the firearm when the latch element is in its locking position. Two embodiments are described: a semi-automatic pistol, wherein the control member is a pivotal safety lever; and a revolver, wherein the control member is a rebound slide.

19 Claims, 7 Drawing Sheets

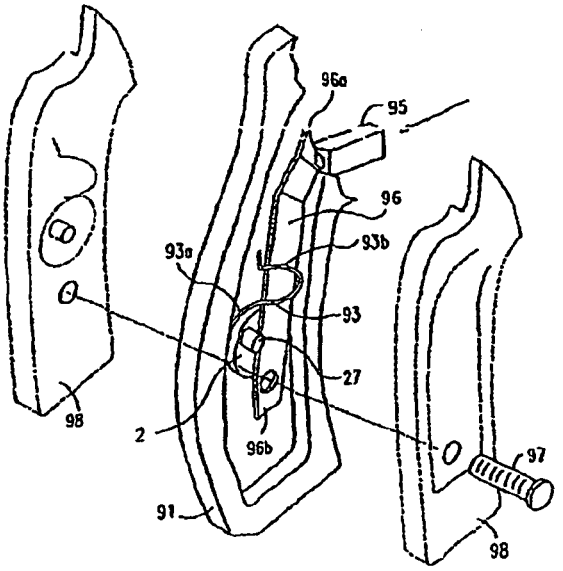

PR 0200

ET50378

FIG 1

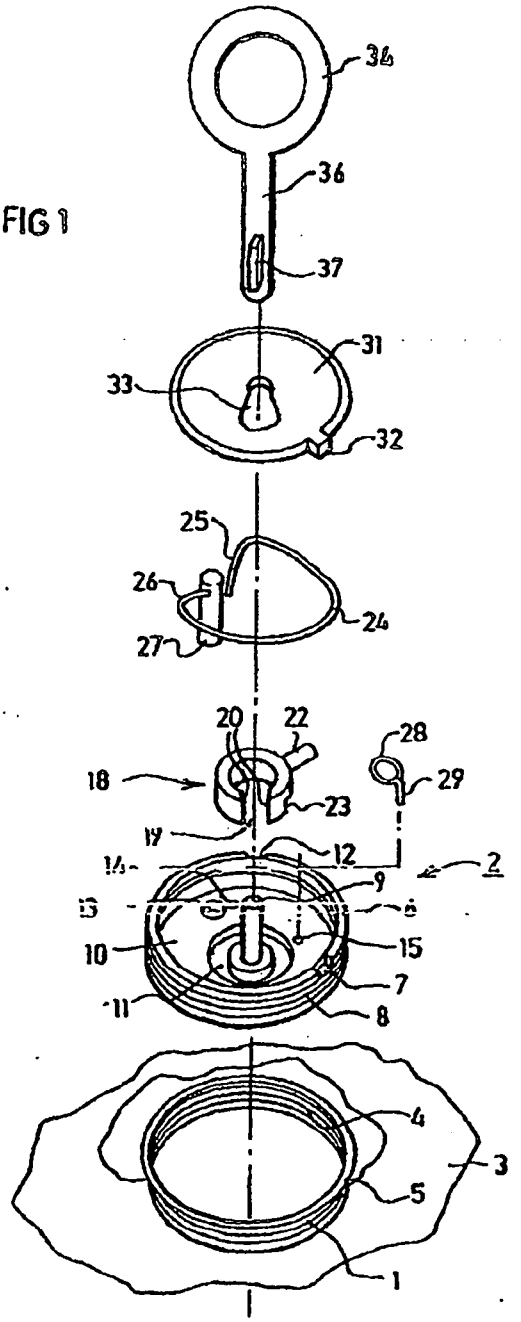

PR 0201

ET50379

FIG 1

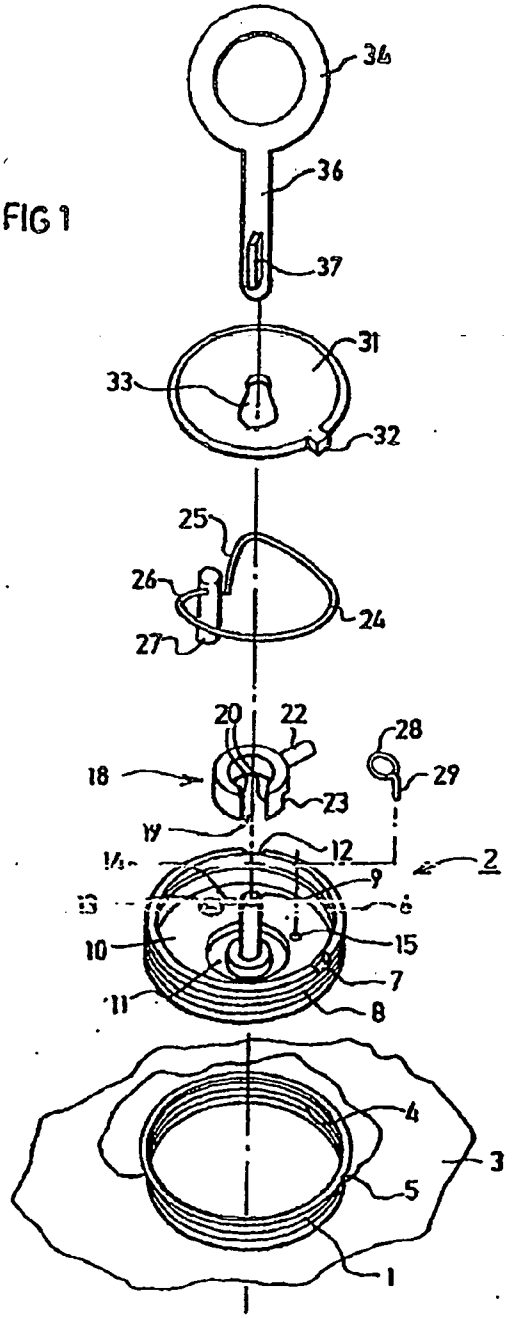

PR 0202.

ET50380

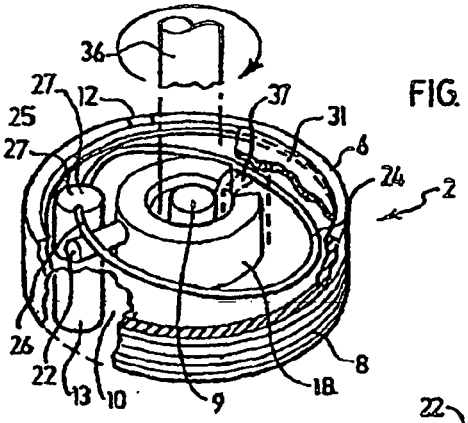

FIG. 2

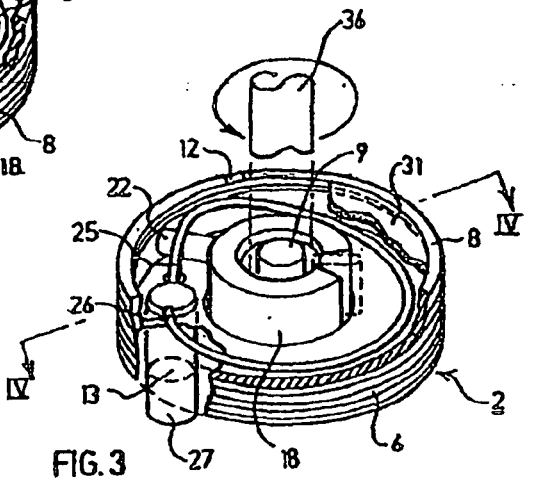

FIG. 3

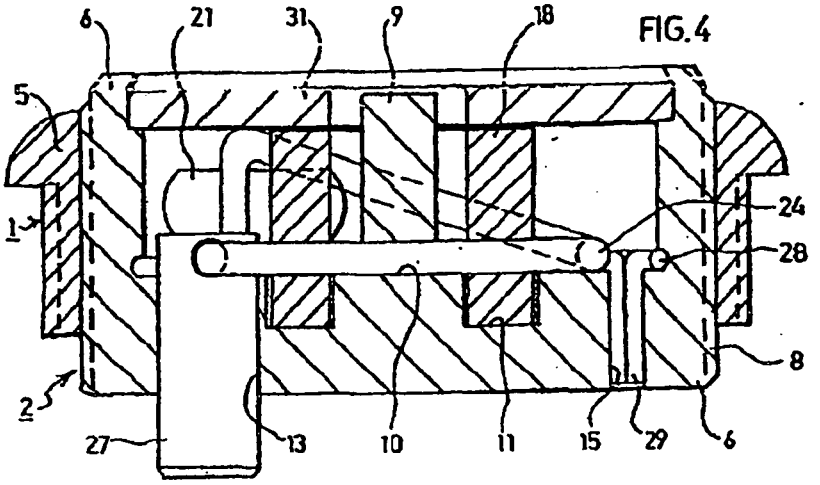

FIG. 4

PR 0203

ET50381

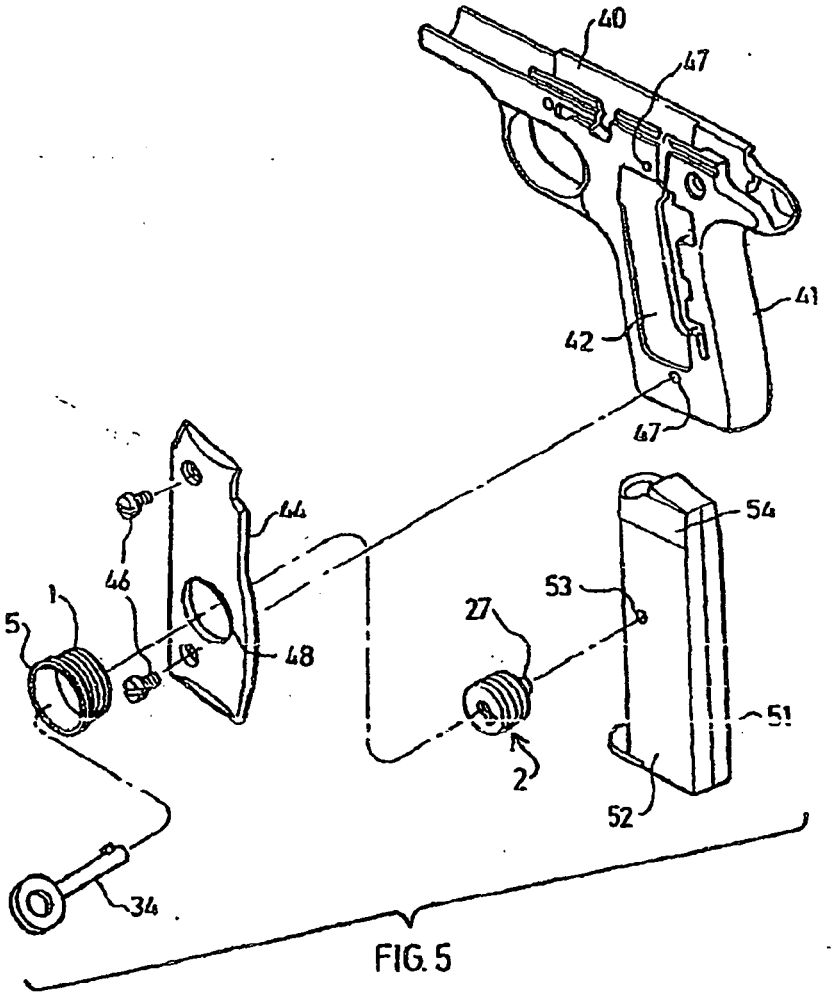

FIG. 5

PR 0205

ET50383

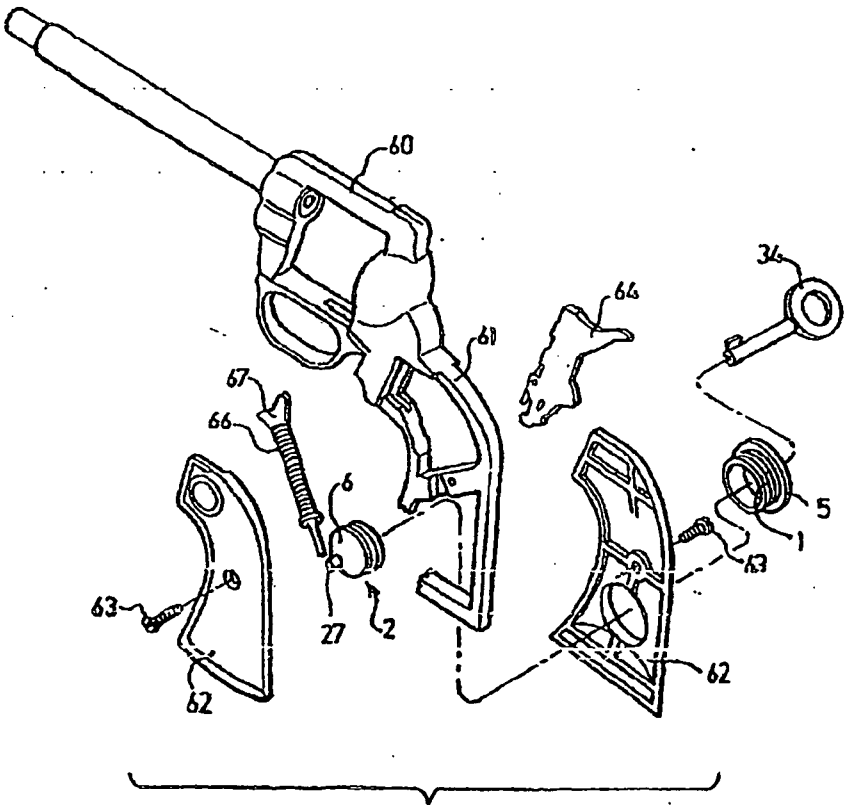

FIG. 6

PR 0206

ET50384

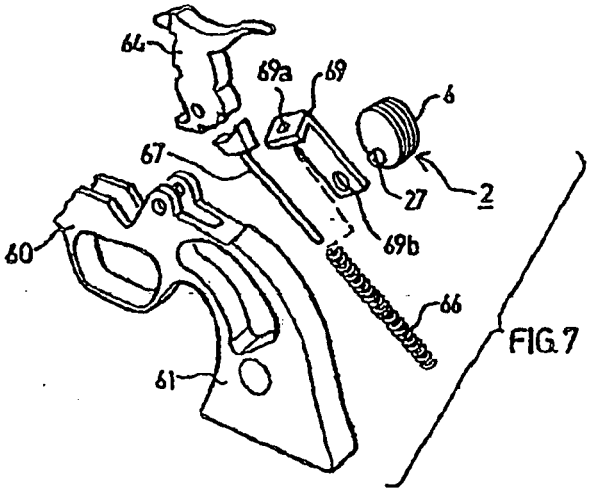

FIG. 7

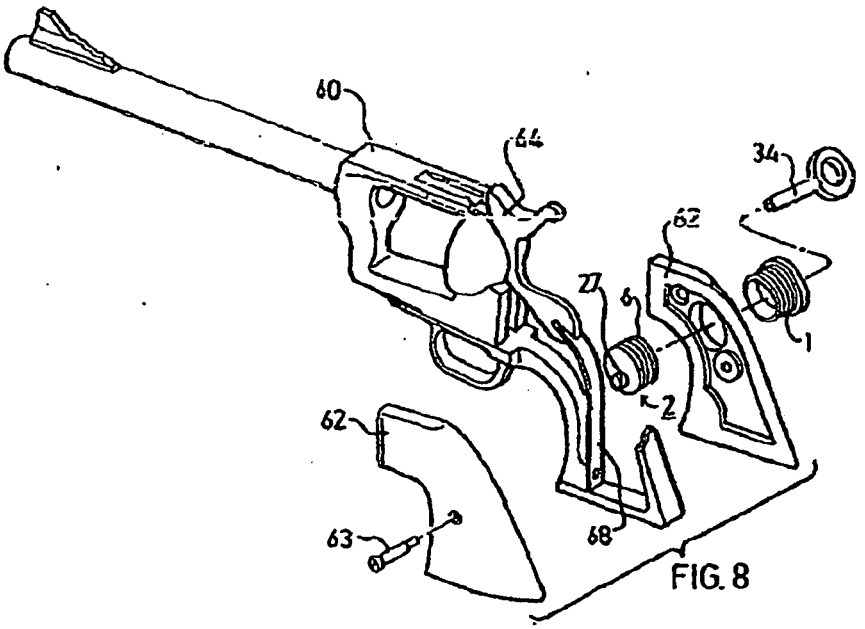

FIG. 8

PR 0207

ET50385

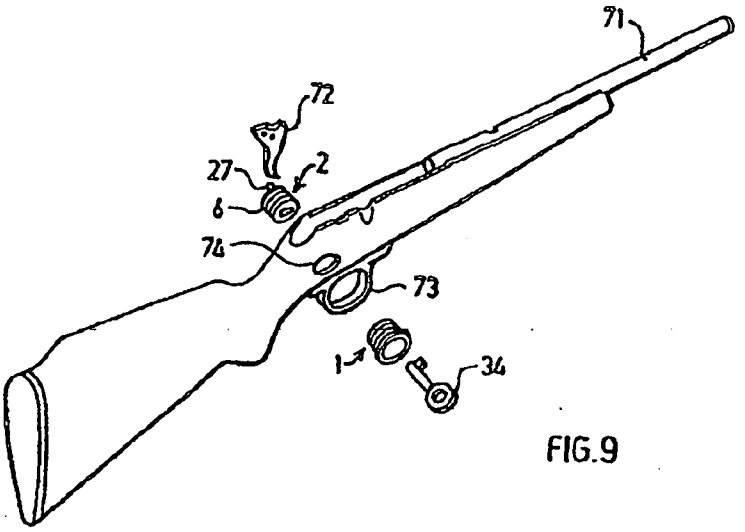

FIG.9

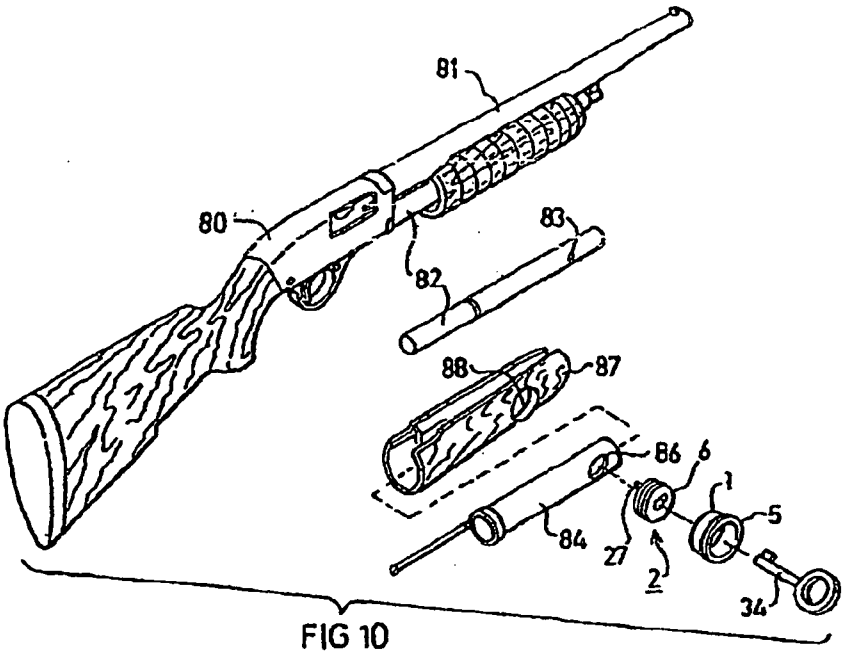

FIG 10

PR 0208

ET50386

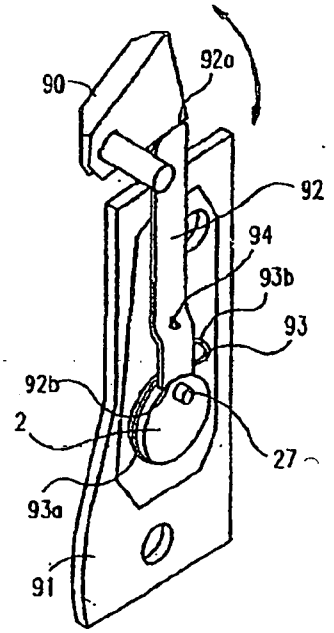

FIG. 11

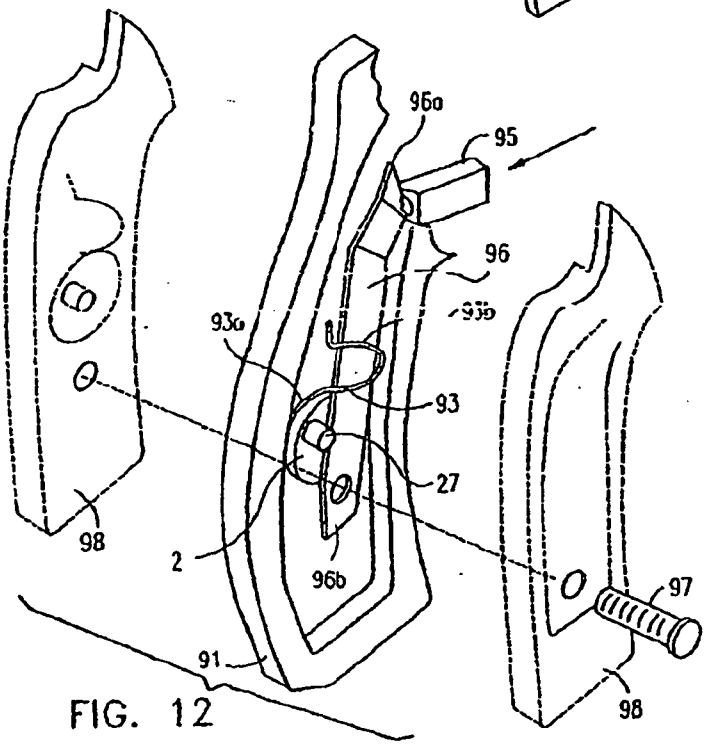

FIG. 12

PR 0209

ET50387

FIREARM WITH SAFETY DEVICE

RELATED APPLICATION

The present application is a continuation-in-part of my patent application Ser. No. 08/372,761, filed Jan. 13, 1995, patented on Dec. 10, 1996, U.S. Pat. No. 5,581,927.

FIELD AND BACKGROUND OF THE INVENTION

The present invention relates to firearms, and particularly to a firearm equipped with a safety device which may be used for disabling the firearm from firing a cartridge.

Firearms are presently widely available among civilians as well as law enforcement agents and military personnel. They therefore represent a serious danger to children and others who may have unauthorized access to the firearm. A common way to prevent accidental firing of a firearm is to remove from it an essential operative component, such as the magazine of a pistol, and to keep it separate from the firearm itself. However, in such case the firearm is not ready for use should a need suddenly arise; moreover, the separated component may get lost or misplaced. Another known safety means for disabling a firearm from firing a cartridge is an add-on locking device mounted on the trigger guard to prevent access to the trigger. However, in order to enable the firearm for use, the add-on device must be physically removed and placed at a suitable location for ready re-use whenever necessary, which is not only time-consuming and inconvenient, but may also result in the misplacement or loss of the removed device.

Other techniques for disabling a firearm include the insertion of an insert into a firearm's firing chamber or magazine chamber which insert must be withdrawn to enable the firearm to be used. However, an insert into the firing chamber may damage the rifling of the firing chamber. Moreover, such inserts must be separately stored and/or carried by the user, which is not always convenient, and which can also result in the loss or misplacement of the insert.

OBJECTS AND BRIEF SUMMARY OF THE INVENTION

An object of the present invention is to provide a firearm with a safety device having advantages in the above respects. Another object of the invention is to provide a safety device for a firearm which can be applied to many diverse types of firearms, particularly automatic pistols and revolvers.

According to the invention of the present application, there is provided a firearm including a frame having a grip for manually grasping the firearm, and a control member movable from a first position to a second position to enable firing the firearm; characterized in that the firearm further includes: a locking device carried by the frame for receiving a removable key. The locking device includes a latch element movable by an inserted key either to a locking position or to a releasing position. The firearm further includes a locking member movably carried by the frame, and a spring acting on the locking member to bring a first surface of the locking member into contact with the control member such that the locking member moves with the control member from the first position to the second position to enable firing the firearm. The locking member includes a second surface located with respect to the latch element of the locking device so as to be engaged thereby when the latch element is in its locking position, to block the movement of the locking member, and thereby of the control member, from the first position to the second position, to prevent the firing of the firearm when the latch element is in its locking position.

According to further features in one described preferred embodiment particularly useful in automatic pistols, the control member is a safety lever pivotally carried by the frame and manually presettable from an "OFF" first position to an "ON" second position to enable firing the firearm.

In a second described embodiment particularly useful in revolvers, the control member is a rebound slide which is reciprocated during the trigger pull from the first position to the second position and back to the first position.

It will thus be seen that a firearm constructed in accordance with the foregoing features does not require any add-on locking device or insert which has to be separately removed and stored in order to enable the firearm; but rather requires merely a key, which can be conveniently carried by the user with the many other keys the user normally carries. Thus, the firearm may be stored in its disabled condition and quickly enabled whenever necessary by an authorized person by merely inserting and rotating the key. Such a key would generally be carried by the user with the user's other keys, thereby adding no significant burden to the authorized user, and also decreasing the possibility of losing or misplacing the key, as compared to where an add-on locking device or an insert is needed for disabling the firearm.

As will be described more particularly below, such a locking device may be applied in a very simple manner to a wide variety of different types of firearms, particularly automatic pistols and revolvers. For purposes of example, two different types of firearms are described below showing how each may accommodate the locking device in order to disable the firearm from being used for firing a cartridge.

Further features and advantages of the invention will be apparent from the description below.

BRIEF DESCRIPTION OF THE DRAWINGS

The invention will now be described, by way of example only, with reference to the accompanying drawings wherein:

FIG. 1 is an exploded perspective view of one form of lock constructed in accordance with the present invention;

FIG. 2 is a fractional perspective view of the lock of FIG. 1 shown in the unlocked state;

FIG. 3 is a similar view as FIG. 1 showing the lock in the locked state;

FIG. 4 is a cross-section along line IV—IV in FIG. 3;

FIG. 5 is an exploded perspective view of an automatic pistol equipped with the lock of FIGS. 1–4;

FIGS. 6–8 are exploded perspective views illustrating three types of revolvers, respectively, equipped with the lock of FIGS. 1–4;

FIG. 9 is an exploded perspective view of a rifle equipped with the lock of FIGS. 1–4;

FIG. 10 is an exploded perspective view of a pump action rifle equipped with the lock of FIGS. 1–4;

FIG. 11 is a perspective view illustrating how the lock of FIGS. 1–4 may be incorporated in an automatic pistol having a pivotal safety lever which is blocked to prevent firing the pistol;

and FIG. 12 is an exploded perspective view illustrating how the lock of FIGS. 1–4 may be incorporated in a revolver having a rebound slide which is blocked to prevent firing the revolver.

DESCRIPTION OF SPECIFIC EMBODIMENTS

Reference is first made to FIGS. 1–4 of the drawings for a description of the structure and operation of a lock constructed according to the present invention. The lock, generally designated 2, fits into a cylindrical cavity in the form of a sleeve 1 securely held by a structural part 3 of the firearm, such as the sidewall of a pistol grip. Sleeve 1 is formed with internal threads 4 and a projecting rim 5. Lock 2 comprises a cup-shaped housing 6 having at its upper edge a rectangular cutout 7 and is formed with external threads 8 enabling it to be threaded into sleeve 1. Housing 6 is formed with a notch 12 receiving a pin (not shown) for retaining the housing in place.

Housing 6 comprises an integral central stem 9 projecting from a bottom wall 10 formed with a concentric annular groove 11. Bottom wall 10 is further formed with a first cylindrical bore 13 and two smaller bores 14 and 15. A horseshoe-shaped actuator 18, formed with a slot 19 between cheeks 20, is rotatably mounted with the annular groove 11. Actuator 18 has a laterally projecting finger 22 and an indentation 23 on its outer face.

Within the housing 6 there is located a single turn helical spring 24 having a first, vertical end portion 25 received in a bore 14, and a second, horizontal end portion 26 received in a hole of a cylindrical latch element 27 reciprocable within bore 13.

A looped retainer spring 28, having a shank 29 received within bore 15, is designed to retain actuator 18 in either of two angular positions by snappingly engaging either the indentation 23 or the slot 19 of actuator 18. A cover plate 31, with a tongue 32 fitting into cutout 7 and a keyhole 33, covers housing 6 from above. Keyhole 33 is designed to admit the hollow shank 36 of a key 34 receivable over stem 9 and having a key bit 37 receivable in slot 19 of actuator 18.

The operation of lock 2 will now be explained with reference to FIGS. 2 and 3.

As shown, finger 22 of actuator 18 is positioned underneath the single turn helical spring 24. When the key 34 is inserted into the keyhole 33, its bit 37 penetrates into slot 19 of the actuator 18 bearing on the two cheeks 20. Turning the key 34 causes actuator 18 to rotate with its finger 22 gliding along the single turn helical spring 24. When the key 34 is turned clockwise all the way until the finger 22 of actuator 18 abuts latch element 27 as shown in FIG. 2, the horizontal end portion 26 of the single turn helical spring 24 is raised pulling with it latch element 27, which is thereby moved to its retracted position within housing 6.

When the key 34 is turned all the way anti-clockwise until finger 22 abuts the vertical end portion 25 of the single turn helical spring 24 as shown in FIG. 3, the end portion 26 is urged down, whereby latch element 27 is urged to its projected position through bore 13. If latch element 27 is designed to engage a matching bore or opening, and the bore or opening is out of register with bore 13 so that the latch element encounters an obstacle, it will remain retracted until the matching bore or opening is brought into register with bore 13.

Pre-adjusting the lock, so that the latch element 27 projects in register with the opening of the essential operative component, is carried out by angularly displacing the lock 2 within the sleeve 1 until the latch element 27 eccentrically projecting from the lock comes into register with the opening. The angular position of the lock may then be fixed by slightly indenting rim 5 into recess 12 of the housing 6.

Obviously, the lock may be provided with a ward or other means for making it more sophisticated and untamperable, and the key be shaped accordingly, all as known per se.

FIGS. 5–10 of the drawings illustrate how the present invention may be applied to different kinds of firearms. For the sake of clarity and simplicity of illustration, those parts of the weapons illustrated which are known per se and not relevant to the present invention are not shown.

In FIG. 5 there is shown an automatic pistol having a frame 40 with a grip 41 holding a magazine chamber 42 and fitted with a pair of removable sidewalls 44 (only one of which is shown) attached by screws 46 engaging suitably threaded holes 47 in the frame. The sidewall 44 has a circular cutout 48 which securely holds the sleeve 1 with the rim 5 bearing against the external surface of the sidewall 44. The housing 6 of lock 2 is screwed into the sleeve 1.

A magazine 51 has, on its sidewall 52 facing the removable sidewall 44 of grip 41, an opening 53 for engagement by latch element 27.

When required, lock 2 is locked by means of key 34 whereby the latch element 27 is urged to project into the magazine chamber 42. This operation may be performed either with the magazine 51 present in the magazine chamber 42, or with an empty magazine chamber.

If the locking operation is performed with a magazine fully inserted in the magazine chamber 42, latch element 27 bears on the magazine's sidewall 52; therefore, the magazine must then be partially withdrawn until opening 53 comes into register with latch element 27, whereupon the latch element spontaneously snaps into opening 53; this would arrest the magazine in an intermediate, inoperative position.

If, on the other hand, the locking operation is carried out while the magazine chamber 42 is empty, then upon locking, latch element 27 projects into the magazine chamber 42; upon insertion of a magazine, the latch element 27 glides over the sloping lips 54 of the magazine and snaps into hole 53 as soon as the latter registers with the latch element, again arresting the magazine in an intermediate, inoperative position.

It is an advantage of this locking arrangement that in addition to the pistol becoming inoperative, the cartridges within the arrested magazines are out of reach for as long as the pistol remains locked.

FIGS. 6–8 illustrate how the present invention may be applied to three different kinds of revolvers. To facilitate understanding, those components which are principally the same in these figures are designated by the same reference numerals.

Each revolver includes a revolver frame 60 having a grip 61 and removable sidewalls 62 attached to the grip by screws 63. Each revolver comprises a hammer 64 associated with a main spring which upon actuation propels the hammer to perform a forward striking motion, as known per se. The main spring is either a compression spring 66 mounted on a guiding rod 67 as shown in FIGS. 6 and 7, or a leaf spring 68 as shown in FIG. 8. In all three constructions, upon cocking the hammer 64, the main spring undergoes a deformation whereby it is loaded.

One of the sidewalls 62 is fitted with a lock 2 of the kind shown in FIGS. 1–4 and which functions in a similar manner as explained with respect to the automatic pistol of FIG. 5.

In the embodiment of FIG. 6, the latch element 27 of lock 2 is adapted for engagement with the rear end of the guiding rod 67 whereby, upon locking, latch element 27 prevents the main spring from being tensioned so that the hammer 64 may not be cocked and the revolver cannot be fired.

In the embodiment of FIG. 7, there is an L-shaped bracket 69 having in its foot portion a hole 71 whereby the bracket

PR 0211

ET50389

can be slid on the guiding rod 67. A hole 72 in the shank of bracket 69 serves for engagement by latch element 27 and upon such enagement the bracket is arrested whereby spring 66 is blocked and cannot be deformed. In consequence the hammer 64 cannot be cocked with the result that the revolver is disabled.

In the embodiment of FIG. 8, the latch element 27 is suited to bear, when in locking position, on the back of leaf spring 68 thereby preventing its deformation whereby the hammer 64 cannot be cocked and the revolver is disabled.

FIG. 9 illustrates how the invention may be applied to a rifle. A body 70 including a barrel 71 and a firing mechanism, of which only a trigger 72 is shown, has on a sidewall thereon adjacent the trigger guard 73 an opening 74 for accommodating the sleeve 1 holding lock 2. The arrangement is such that in the locking or projecting position of latch element 27, it bears on the rear of the trigger 72, thereby preventing it from being the rifle is di the rifle is disabled.

FIG. 10 illustrates a rifle of the pump-action type comprising a body 80 holding a barrel 81 and a tubular magazine 82 having a lateral hole 83. Enveloping the tubular magazine 82 is a sliding lever 84 reciprocable between a forward position as illustrated in FIG. 10 and a rear portion. Each time the sliding lever 84 is reciprocated, the rifle is cocked and loaded; or alternatively, an empty cartridge is extracted and ejected.

The lever 84 has a hole 86 and is enveloped by a wooden hand guard 87 rigidly attached thereto and having a registering hole 88. Holes 86 and 88 accommodate between them the lock 2. Upon locking, the latch element 27 projects into the hole 83 of the tubular magazine 82 whereby the lever 84 is arrested and the rifle is disabled.

FIGS. 11 and 12 illustrate how the lock 2 of FIGS. 1–4 may be included in a firearm, particularly an automatic pistol or revolver, having a control member which must be moved from a first position to a second position to enable firing the firearm, wherein the lock blocks the movement of the control member to the second position and thereby prevents firing the firearm.

In FIG. 11, the firearm is an automatic pistol in which the control member is the pivotal safety lever 90 conventionally provided on such a pistol, which safety lever must be manually pivoted from its "OFF" to its "FIRING" position to enable firing the pistol. Here, the lock 2 is attached to the grip 91 of the pistol frame in the manner described above such that its latch element 27 is in its projected position (as shown in FIG. 11) when the lock is in its locked condition, and is moved to its retracted position within the lock housing when the lock is in its released condition.

The grip 91 of the automatic pistol illustrated in FIG. 11 is provided with a locking member in the form of a bar 92 interposed between latch element 27 and the pivotal safety lever 90. A spring 93 continuously urges the upper surface 92a of the locking bar into engagement with the pivotal safety lever. One end of spring 93 is in the form of a coil or loop 93a which encloses the cylindrical housing of lock 2, and the opposite end of the spring is formed with an extension 93b received within an opening 94 in locking bar 92 for urging surface 92a of the locking bar against the pivotal safety lever 90, with the opposite end 92b of the locking bar in alignment with the latch element 27 of the lock.

Safety lever 90 is shown in FIG. 11 in the position in which it prevents firing the pistol. For purposes of simplifying the present description, the structure by which safety lever 90 prevents firing the pistol is not set forth herein since such structure is conventional and forms no part of the present invention.

In order to enable firing the pistol, safety lever 90 must be manually pivoted (clockwise, FIG. 11). Since surface 92a of locking bar 92 is continuously urged by spring 93 against the underside of safety lever 90, this pivotting of the safety lever will also move the locking bar 92 downwardly. If latch element 27 of lock 2 is in its released position, retracted within the lock, the latch element will not interfere with the downward movement of locking bar 92, and will therefore permit the manual pivotting of the safety lever to its "FIRING" position. However, if latch element 27 is in its locking position, projecting from the lock as shown in FIG. 11, it will block locking bar 92 from moving downwardly, and thereby prevent the safety lever 90 from being pivotted to its "FIRING" position.

FIG. 12 illustrates the lock 2 attached to the grip 91 of a revolver having a rebound slide 95 which is reciprocated during the trigger pull of the pistol from a first position (shown in FIG. 12) to a second position by the trigger movement of the pistol. Again, for simplifying the description, the mechanism by which the rebound slide 95 is to be reciprocated during the firing of the pistol is not set forth herein as such mechanism is conventional and forms no part of the present invention.

According to the present invention, the grip 91 is provided with a pivotal locking lever 96 pivotally mounted at its lower end to the grip by the screw 97 attaching the two removable side walls 98 to the grip. The revolver of FIG. 12 further includes spring 93 having a coil 93a at one end enclosing lock 2 and an extension 93b at the opposite end engageable with locking lever 96 for urging the locking lever against the rebound slide 95. In this case, however, the extension 93b of spring 93 bears against a side of the locking lever 96 (rather than passing through a hole in it as shown in FIG. 11) to urge surface 96a at the upper end of the locking lever continuously against the rebound slide 95.

Thus, in the released condition of lock 2, latch element 27 is retracted within the lock. This permits locking lever 96, having its surface 96a at its upper end continuously engaging rebound slide 95 under the influence of spring 93, to pivot about screw 97 during the reciprocatory movement of the rebound slide, thereby enabling the revolver to be fired. However, when lock 2 is in its locking position with its latch element 27 projecting from the lock as shown in FIG. 12, latch element 27 engages surface 96b of locking lever 96, preventing the locking lever from pivotting about screw 97, and thereby blocking the reciprocatory movement of the rebound slide 95 to prevent firing the revolver.

From the foregoing, it is readily understood that the present invention may be applied to different kinds of firearms.

While the invention has been described with respect to one preferred embodiment of lock structure, it will be appreciated that many changes may be made. For example, sleeve 1 may be omitted, and housing 6 applied directly to the firearm. In addition, retainer spring 28 could be omitted or replaced by a springy disc pressing actuator 18 into groove 11 in housing 6 for frictionally loading movement of the actuator. Further, a shaped leaf spring can be used for the wire spring 24, and a roll pin can be provided to be received within notch 12 to prevent rotation of the housing 6. Many other variations, modifications and applications of the invention will be apparent.

PR 0212

ET50390

I claim:

1. A firearm including a frame having a grip for manually grasping the firearm, and a control member movable from a first position to a second position to enable firing the firearm; characterized in that said firearm further includes:

a locking device carried by said frame for receiving a removable key, said locking device including a latch element movable by an inserted key either to a locking position or to a releasing position;

a locking member movably carried by said frame;

and a spring acting on said locking member to bring a first surface of the locking member into contact with said control member such that the locking member moves with the control member from said first position to said second position to enable firing the firearm;

said locking member including a second surface located with respect to said latch element of the locking device so as to be engaged thereby when the latch element is in its locking position, to block the movement of the locking member, and thereby of the control member, from said first position to said second position, to prevent the firing of the firearm when the latch element is in its locking position;

said locking device including a cylindrical housing formed with external threads, and said grip including a cylindrical cavity formed with internal threads for threadedly receiving said housing.

2. The firearm according to claim 1, wherein said control member is a pivotal safety lever pivotally carried by said frame and manually presettable from an "OFF" first position to an "ON" second position to enable firing the firearm.

3. A firearm including a frame having a grip for manually grasping the firearm, and a control member movable from a first position to a second position to enable firing the firearm; characterized in that said firearm further includes:

a locking device carried by said frame for receiving a removable key, said locking device including a latch element movable by an inserted key either to a locking position or to a releasing position;

a locking member movably carried by said frame; and a spring acting on said locking member to bring a first surface of the locking member into contact with said control member such that the locking member moves with the control member from said first position to said second position to enable firing the firearm;

said locking member including a second surface located with respect to said latch element of the locking device so as to be engaged thereby when the latch element is in its locking position, to block the movement of the locking member, and thereby of the control member, from said first position to said second position, to prevent the firing of the firearm when the latch element is in its locking position;

said control member being a pivotal safety lever pivotally carried by said frame and manually presettable from an "OFF" first position to an "ON" second position to enable firing the firearm.

4. The firearm according to claim 3, wherein said locking device is carried by the grip of the firearm, and said locking member is interposed between the locking device and the pivotal safety lever.

5. The firearm according to claim 4, wherein said locking member is a locking bar having an upper end, constituting said first surface, in contact with the pivotal safety lever, and a lower end, constituting said second surface, engaged by the latch element of the locking device when in its locking position.

6. The firearm according to claim 5, wherein said locking device includes a cylindrical housing carried by the grip of the firearm, and said spring includes a coil at one end enclosing said housing, and an extension at the opposite end engaging said locking bar for urging said locking bar against said pivotal safety lever.

7. The firearm according to claim 6, wherein said cylindrical housing of the locking device is formed with external threads, and said grip includes a cylindrical cavity formed with internal threads for threadedly receiving said housing.

8. The firearm according to claim 6, wherein said cylindrical housing of the locking device is closed at its opposite ends by end walls, the length of the housing being substantially shorter than the transverse dimensions of said end walls; one of said end walls being formed with a keyhole for receiving said removable key, and the opposite end wall being formed with an opening through which said latch element projects to said locking position when moved by the inserted key.

9. The firearm according to claim 8, wherein said housing further includes a rotatable actuator having a finger engageable with said latch element; said actuator being rotatable by the insertion and rotation of a key via said keyhole to rotate the finger to move said latch element to its locking position by projecting said latch element through said opening in the housing, or to its releasing position retracting said latch element within said housing.

10. The firearm according to claim 1, wherein said control member is a rebound slide which is reciprocated during the firing of the firearm from said first position to said second position and back to said first position.

11. The firearm according to claim 10, wherein said locking device is carried by the grip of the firearm, and said locking member is interposed between the locking device and the rebound slide.

12. The firearm according to claim 11, wherein said locking member is a pivotal locking lever having an upper end formed with said first surface in contact with the rebound slide, said pivotal locking lever being pivotally mounted at its lower end and including an intermediate surface, constituting said second surface, engaged by the latch element when in its locking position.

13. The firearm according to claim 12, wherein said pivotal locking lever includes a cylindrical housing carried by the grip of the firearm, and said spring includes a coil at one end enclosing said housing, and an extension at the opposite end engaging said pivotal locking lever for urging said locking lever against said rebound slide.

14. The firearm according to claim 13, wherein said cylindrical housing of the locking device is formed with external threads, and said grip includes a cylindrical cavity formed with internal threads for threadedly receiving said housing.

15. The firearm according to claim 14, wherein said cylindrical housing of the locking device is closed at its opposite ends by end walls, the length of the housing being substantially shorter than the transverse dimensions of said end walls; one of said end walls being formed with a keyhole for receiving said removable key, and the opposite end wall being formed with an opening through which said latch element projects to said locking position when moved by the inserted key.

16. The firearm according to claim 15, wherein said housing further includes a rotatable actuator having a finger engageable with said latch element; said actuator being rotatable by the insertion and rotation of a key via said keyhole to rotate the finger to move said latch element to its

PR 0213

ET50391

locking position by projecting said latch element through said opening in the housing, or to its releasing position retracting said latch element within said housing.

17. The firearm according to claim 3, wherein said locking device includes a cylindrical housing formed with external threads, and said grip includes a cylindrical cavity formed with internal threads for threadedly receiving said housing.

18. The firearm according to claim 17, wherein said cylindrical housing of the locking device is closed at its opposite ends by end walls, the length of the housing being substantially shorter than the transverse dimensions of said end walls; one of said end walls being formed with a keyhole for receiving said removable key, and the opposite end wall being formed with an opening through which said latch element projects to said locking position when moved by the inserted key.

19. The firearm according to claim 18, wherein said housing further includes a rotatable actuator having a finger engageable with said latch element; said actuator being rotatable by the insertion and rotation of a key via said keyhole to rotate the finger to move said latch element to its locking position by projecting said latch element through said opening in the housing, or to its releasing position retracting said latch element within said housing.

* * * * *

PR 0214

ET50392

WOMBLE
CARLYLE
SANDRIDGE
& RICE
PLLC

PATENTABILITY SEARCH RESULTS FOR INTEGRAL SAFETY LOCKING MECHANISM OF BOLT ACTION RIFLE

(R087 9220; 27584.0231.5)

PR 0215

ET50393

U.S. Patent Number	Inventor	Issue Date
1. 639,421	Mauser	December 19, 1899
2. 1,669,496	Stahl	May 15, 1928
3. 3,553,877	Welch et al.	Jan 12, 1971
4. 3,673,725	Cravener	July 4, 1972
5. 3,782,022	Bielfeldt et al.	January 1, 1974
6. 4,569,145	Ruger et al.	February 11, 1986
7. 4,672,762	Nilsson	June 16, 1987
8. 5,465,519	Blanck	November 14, 1995
9. 5,467,550	Mumbleau	November 21, 1995
10. 5,913,666	Perkins	June 22, 1999
11. 6,122,851	Perkins	September 26, 2002
12. 6,260,298 B1	Bubits	July 17, 2001
13. 6,388,217 B1	Viani	January 15, 202

PR 0216

ET50394

PR 0217

ET50395

No. 639,421. Patented Dec. 19, 1899.

P. MAUSER.

RECOIL OPERATED FIREARM.

(Application filed Dec. 27, 1898.)

(No Model.) 5 Sheets—Sheet 1.

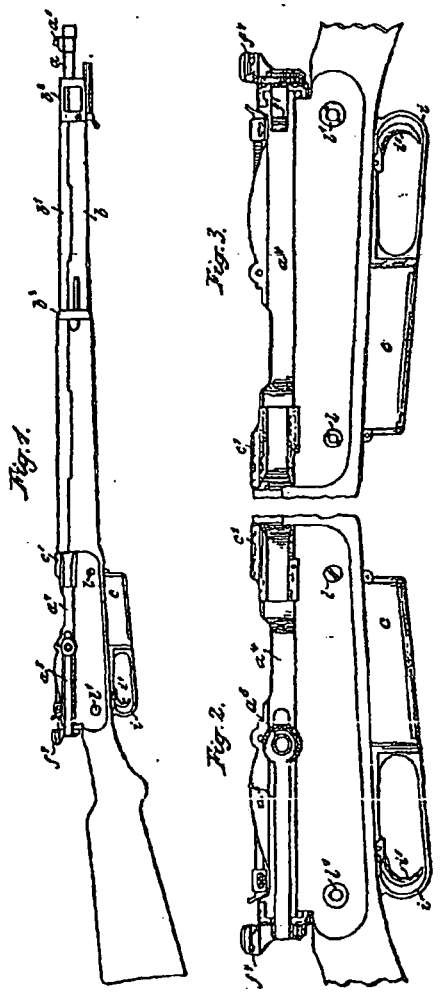

Witnesses:
John Pole
Walter Allen

Inventor
Paul Mauser.
by Herbert W. J. James
Attorney.

PR 0218

ET50396

No. 639,421. Patented Dec. 19, 1899.

P. MAUSER.

RECOIL OPERATED FIREARM.

(Application filed Dec. 27, 1898.)

(No Model.) 5 Sheets—Sheet 2.

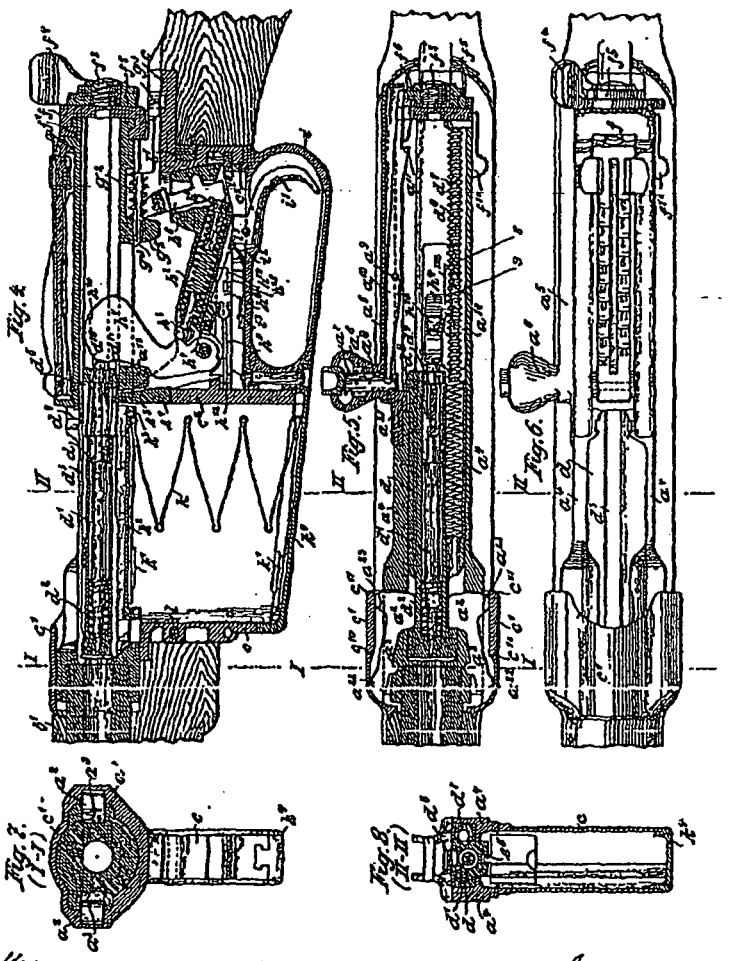

Witnesses.
J. Hugg Poole
Walter Allen

Inventor
Paul Mauser.
by Robert W. Jenner.
Attorney.

PR 0219

ET50397

No. 639,421. Patented Dec. 19, 1899.

P. MAUSER.

RECOIL OPERATED FIREARM.

(Application filed Dec. 27, 1898.)

(No Model.) 8 Sheets—Sheet 3.

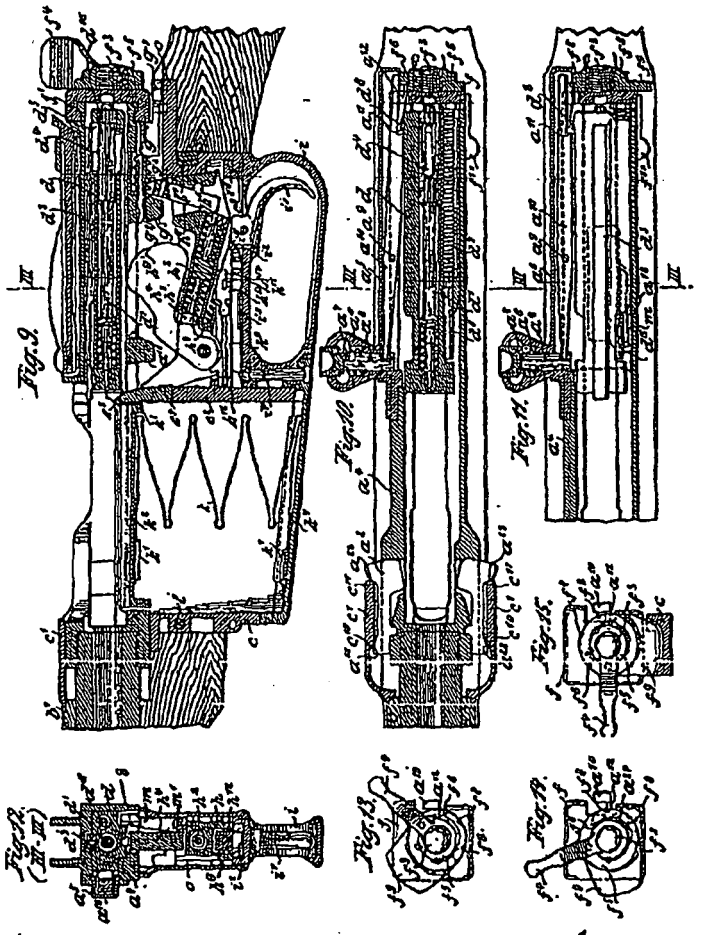

Witnesses:
J. Fred Pohl
Walter Allen

Inventor.
Paul Mauser.
by Herbert W. Johnson.
Attorney.

PR 0220

ET50398

No. 639,421. Patented Dec. 19, 1899.

P. MAUSER.

RECOIL OPERATED FIREARM.

(Application filed Dec. 27, 1898.)

(No Model.) 8 Sheets—Sheet 4.

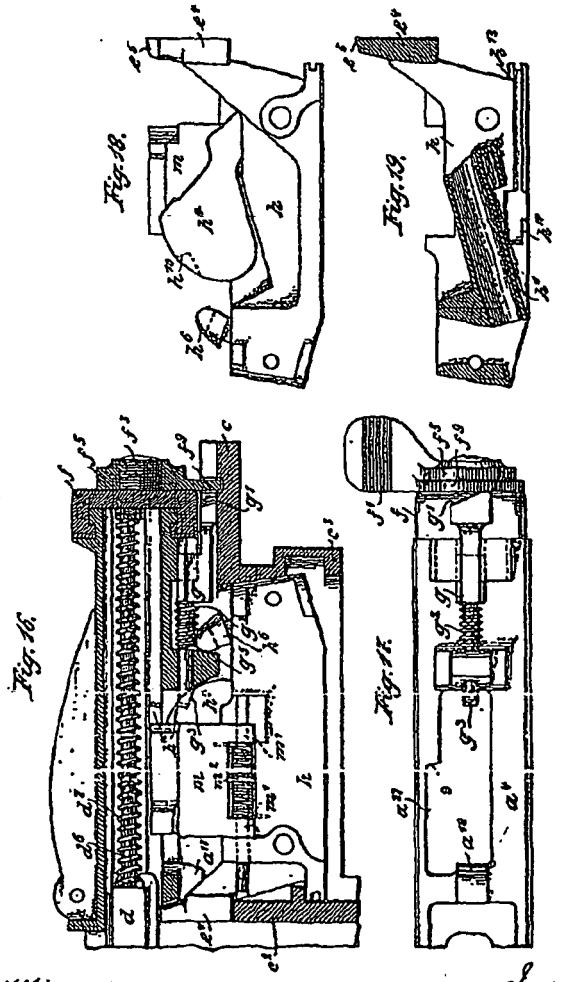

Witnesses:
J. Snagg Poole
Walter Allen

Inventor.
Paul Mauser.
by Robert M. Gomer
Attorney.

PR 0221

ET50399

No. 639,421. Patented Dec. 19, 1899.

P. MAUSER.

RECOIL OPERATED FIREARM.

(Application filed Dec. 27, 1898.)

(No Model.) 5 Sheets—Sheet 5.

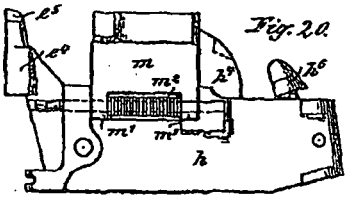

Fig. 20.

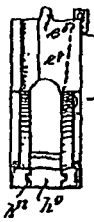

Fig. 21.

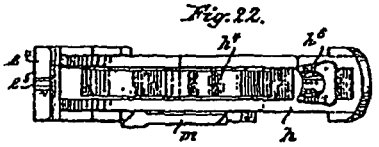

Fig. 22.

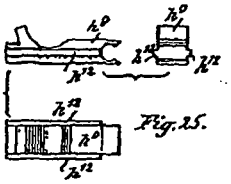

Fig. 25.

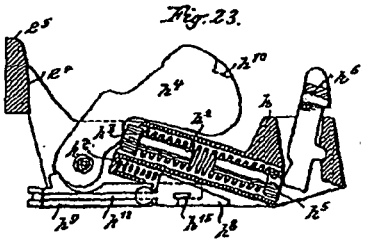

Fig. 23.

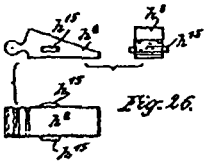

Fig. 26.

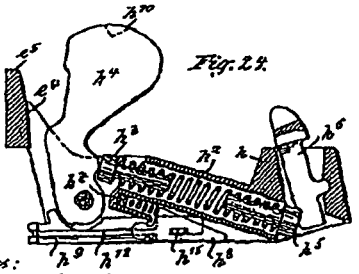

Fig. 24.

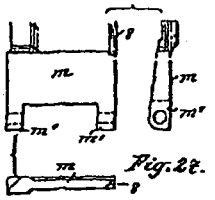

Fig. 27.

Witnesses:
A. G. Hopfmann
J. Spring Poole

Inventor.
Paul Mauser.
by Herbert H. Glenner.
Attorney.

PR 0222

ET50400

UNITED STATES PATENT OFFICE.

PAUL MAUSER, OF OBERNDORF, GERMANY.

RECOIL-OPERATED FIREARM.

SPECIFICATION forming part of Letters Patent No. 639,421, dated December 19, 1899.

Application filed December 27, 1898. Serial No. 700,398. (No model.)

To all whom it may concern:

Be it known that I, PAUL MAUSER, a subject of the Emperor of Germany, residing at Oberndorf-on-the-Neckar, in the German Empire, have invented a new and useful self-loading firearm capable of being used as an automatic or as a single-fire weapon, of which the following is a full, clear, and exact description.

This invention relates to firearms; and it consists in the novel construction and combination of the parts hereinafter fully described and claimed.

The principal object of this invention is to construct a firearm which can be fired normally at a prearranged low rate of fire and which can quickly be changed on the word of command and at a critical stage of an action so as to convert it into a rapid-fire, automatic, or self-loading firearm.

In the drawings, Figure 1 is a side view of the firearm. Fig. 2 is a side view of the frame from the right. Fig. 3 is a side view of the frame from the left. Fig. 4 is a longitudinal section through the lock and magazine, showing the breech closed and the weapon discharged. Fig. 5 is a sectional plan view of the parts shown in Fig. 4. Fig. 6 is a plan view of the said parts. Fig. 7 is a cross-section taken on the line I I in Fig. 4. Fig. 8 is a cross-section taken on the line II II in Fig. 4. Fig. 9 is a section similar to that shown in Fig. 4, but shows the breech open and the hammer cocked. Fig. 10 is a sectional plan view of the parts shown in Fig. 9. Fig. 11 is a partial sectional plan view of the lock, showing the parts adjusted for rapid firing. Fig. 12 is a cross-section taken on the line III III in Fig. 9. Figs. 13, 14, and 15 are end views of the safety-catch, showing it in position for single-loading, rapid-firing, and locking, respectively. Fig. 16 is a longitudinal section of portions of the lock, showing the hammer-catch engaging with the hammer. Fig. 17 is a plan view of the hammer-catch. Figs. 18 and 19 are detail views of the lock-frame. Figs. 20, 21, and 22 are detail views of the lock-frame and barrel-catch. Figs. 23 and 24 are detail views of the firing mechanism, showing the hammer in its two positions. Fig. 25 shows detail views of the sear. Fig. 26 shows detail views of the sear-pawl. Fig. 27 shows detail views of the barrel-catch.

The barrel a is slidable longitudinally in the stock b, and b' is a removable cover mortised to the stock b over the barrel and secured by rings b^2 b^3 and a cap c' on the frame c. The front end portion of the barrel carries a sight a'.

The breech-bolt receiver a^1 is screwed to the rear end portion of the barrel, and a^3 are locking-dogs pivoted to the receiver by pivots a^4 and engaging with recesses in it and in the breech-bolt d when the breech is closed by the said bolt, as shown in Fig. 5. The dogs are provided with projections a^{22} in front of their pivots and projections a^{23} behind their pivots. A magazine case or frame c is secured to the stock and is provided with shoulders c^{10} and c^{11}.

When the receiver and barrel are moved forward, the projections a^{22} strike the shoulders c^{11} and pass under them, so that the breech-bolt is locked to the receiver, as shown in Fig. 5. When the receiver and barrel are moved rearward, the projections a^{22} strike the shoulders c^{10}, and the breech-bolt is released from the receiver and is permitted to slide back in it, as shown in Fig. 9. The breech-bolt is pressed forward to close the breech by means of a spring d^7, mounted on a spring-holder d^6 and arranged on one side of the breech-bolt.

The breech-bolt slides longitudinally in the receiver, and d^8 is the firing-pin, which slides longitudinally in the breech-bolt. A spring d^9 inside the front end portion of the breech-bolt engages with a screw-thread on the firing-pin and retracts the firing-pin and prevents it from projecting prematurely from the breech-bolt. This spring slides back and forth with the said pin when the pin is taken out or replaced in the breech-bolt. The spring is less liable to become lost when the firearm is taken apart and does not become stuck in the breech-bolt and require special appliances for extracting it.

A key d^4 engages with slots in the breech-bolt and firing-pin and couples the said parts during the loading movements of the weapon. The key is pressed down by a spring d^9 and its projecting head d^5 bears against the shoulder d^{15} on the firing-pin. The bottom of the key is inclined, and as the breech-bolt is moved forward the bottom of the key strikes the projection e^5 on the lock-frame, which

PR 0223

ET50401

raises the said head clear of the shoulder and permits the firing-pin to be driven forward in the breech-bolt by the hammer against the pressure of the spring d^3.

A breech-bolt slide a^2 is arranged in a slot in the right-hand side of the receiver a^1 and is provided with a knob a^6 for sliding it back and forth. The said slide is provided with a projection a^{11}, which engages with a shoulder d^2 on the breech-bolt. An automatic catch a^{10} is pivoted to the said slide by a pin a^9 and is provided at its rear part with a ratchet-tooth a^{11} and a tappet a^{12}. A push-pin a^8 is slidable in the knob against the pressure of a spring a^7, and the said push-pin is operatively connected to the front end of the catch a^{10}. The catch is set so as to adapt the weapon for rapid firing or for single firing. When the tooth a^{11} is arranged in the path of the shoulder d^2, as shown in Figs. 5 and 10, the breech-bolt is arrested each time it is driven backward and must subsequently be released by pressing the push-pin, thus timing the weapon for single firing. When the said tooth is arranged out of the path of the said shoulder, as shown in Fig. 11, the breech-bolt is not arrested and the weapon is adapted for rapid firing. The adjustment of the catch is effected by a safety-catch f^1, which is pivoted or screwed on a pin f^2, projecting from the end plate f of the receiver. The end plate f is provided with projections which engage with grooves f^7 on the receiver, and it is held in position by a catch f^{10}.

The safety-catch has a disk f^3, provided with two deep notches f^6 and f^8 and a shallow notch f^7, between the deep notches, for the tappet a^{12} to engage with. When the safety-catch is turned to the right, as shown in Figs. 10 and 13, the tappet enters the deep notch f^6, and the breech-bolt is arrested at the end of each rearward movement. When the safety-catch is placed in its middle position, as shown in Figs. 11 and 14, the tappet engages with the shallow notch and the breech-bolt is not arrested. When the safety-catch is turned to the left, as shown in Fig. 15, the tappet engages with the deep notch f^8 and the breech-bolt is arrested, as before, and, in addition, a projection f^9 on the catch engages the inclined end portion g' of the hammer-catch g and thrusts it forward. The projection also enters a groove in the frame c.

The hammer h^6 is pivoted in the lock-frame h, which is supported in the frame c. The hammer-catch slides in a lug g^6 on the under side of the receiver and is provided with a point g^3, which engages with a notch h^{10} in the hammer when the hammer is cocked and the hammer-catch is pushed forward. A spring g^2 is provided for retracting the hammer-catch. When the hammer-catch and the safety-catch are operated, the hammer is locked to the receiver and the receiver is locked to the frame c, which is secured to the stock of the weapon, so that the barrel cannot slide.

In order to retain the barrel (together with the receiver) in its rearward position independent of the safety-catch, and after firing a shot, until the breech-bolt has been moved forward and has pushed the cartridge at the top of the magazine into the barrel, a barrel-catch m (see Fig. 16) is pivoted on a pin m', arranged longitudinally in the lock-frame h. This catch is moved laterally outward into a recess a^{17} in the receiver by its spring m^3 when the receiver is moved backward with the barrel. When the breech-bolt is retracted, it locks the catch in the recess, as shown in Fig. 12.

When the breech-bolt slides forward into the position shown in Fig. 5, it moves past the barrel-catch m, which is then pushed laterally out of the recess by the receiver as it slides forward after the breech-bolt has completed its forward movement. Inclined surfaces 8 and 9 are provided on the catch m and on the receiver at one end of the recess, so that the receiver-operating mechanism overcomes the pressure of the spring m^3.

A pusher h^9 is pivoted in the lock-frame h, and its upper end bears against the lug g^5 and operates to push forward the receiver and barrel. A guide-chamber h' for the spring and pistons is arranged in the lock-frame in an upwardly and forwardly inclined position and contains a spiral spring h^3. A piston h^4 engages with one end of the spring and operates against the hammer, and a piston h^5 engages with the other end of the spring and operates against the pusher. The sear-spring h^7 is arranged in a chamber under the chamber h'. The sear-spring bears against the sear-pawl h^8, which is articulated to the sear h^9. The sear has two guide-ribs h^{12}, which slide in grooves h^{13} in the lock-frame, (see Fig. 19,) and h^{14} are lugs in rear of the said grooves for the lugs h^{15}, which project from the sides of the sear-pawl, to slide on.

The trigger i' is pivoted to the trigger-guard i and is provided with a nose i^5. This nose is normally pushed upward and rearward by the trigger-spring i^2, which is held against the top of the trigger-guard by lugs i^3, projecting from the frame c. The trigger-spring also holds the retractible bolt i^4 in engagement with the bottom plate of the magazine.

The magazine is arranged under the breech. The feed-plate k^3 and the bottom plate k^4 are provided with lugs k' near their front ends, and k is a zigzag spring arranged in the rear part of the magazine and provided with forwardly-projecting end portions which engage with the lugs k'. When the spring is used, the rear ends of the cartridges are raised higher and with greater pressure than their front ends, which is very desirable in a rapid-fire weapon, as it insures the rear end of each cartridge being brought to its position in the path of the breech-bolt before the breech-bolt strikes it.

The magazine frame or case c is connected to the stock by bolts or screws l l', and the

PR 0224

ET50402

front portion e^4 of the lock-frame is placed over the rear wall c^1 of the magazine. The rear nose i^9 of the trigger-guard engages with a projection c^2 on the frame a, and all the parts are finally secured by inserting the bottom plate of the magazine.

The weapon is operated as follows: When required for rapid firing, the safety-catch is placed in its middle position and the breech-bolt is drawn back by the knob a^6 until its front end is engaged by the stop k^2 on the rear end of the cartridge-supply plate of the magazine, which has risen in front of the breech-bolt under the action of its spring k, and the knob is pushed forward to its original position. In drawing back the breech-bolt the hammer is cocked partly by the projection a^{12} on the breech-bolt slide and partly by the shoulder d'^6 on the breech-bolt. The magazine is then filled with cartridges by means of a cartridge-holder of approved construction. When the empty holder is removed from the magazine, the breech-bolt is pressed forward by its spring d^7, and the receiver and barrel are pressed forward by the pusher h^4, so that the top cartridge is pushed into the barrel and the weapon is in a proper condition to be fired. The weapon is fired by the trigger, which presses the sear-pawl and sear forward by means of its nose. The hammer is disengaged when the sear is pushed forward and is then operated by its spring h^3, so that it strikes the rear end of the firing-pin and drives it against the cap of the cartridge, so that the cartridge is exploded. The barrel and breech-bolt first recoil together. The locking-dogs (by the lugs a^{23} engaging the shoulders c^{16}, which forces out their rear ends) then unlock the breech-bolt, which continues to move back under its required momentum, and the barrel-catch enters the recess a^{17} and temporarily locks the barrel and receiver to the stock. The empty cartridge-shell is ejected in the usual manner when the breech-bolt is driven rearward. The rearward motion of the breech-block also cocks the hammer, which is held cocked by the sear. The breech-bolt having completed its rearward movement is at once pushed forward by its spring, and as soon as the breech-bolt is clear of the barrel-catch the receiver and barrel are pushed forward by the spring-operated pusher, which overcomes the pressure of the barrel-catch spring. The weapon can be fired as rapidly as the trigger can be pulled, the speed depending upon the skill of the operator.

When for tactical reasons the rate of firing is to be approximated to that of a single-firing weapon, the safety-catch is placed in the position shown in Fig. 13. The forward motion of the breech-bolt is now arrested at the end of each recoil, and the breech-bolt cannot move forward until it has been released from the pivoted catch by pressing the push-pin a^8. As it takes a certain amount of time to operate the push-pin before pulling the trigger, the rate of firing is diminished to a substantially predetermined extent.

When blank cartridges are fired, the breech-bolt must be retracted by hand.

What I claim is—

1. In a firearm, the combination, with a slidable breech-bolt, of an automatic catch for retaining the said bolt when slid back, a safety-catch for placing the said automatic catch out of action, and means for disengaging the automatic catch from the breech-bolt independent of the safety-catch, substantially as set forth.

2. In a firearm, the combination, with a slidable breech-bolt, of a pivoted catch for retaining the said bolt automatically when slid back, a safety-catch engaging with one end of the pivoted catch and operating to place it into or out of action, and means for disengaging the pivoted catch from the breech-bolt engaging with the opposite end of the pivoted catch and operating independently of the safety-catch, substantially as set forth.

3. In a firearm, the combination, with a frame, a receiver slidable in the frame, and a breech-bolt slidable in the receiver; of an automatic catch for retaining the said bolt when slid back, and a safety-catch operating to place the said automatic catch out of action and to lock the said receiver to the said frame, substantially as set forth.

4. In a firearm, the combination, with a slidable breech-bolt, and a pivoted hammer; of an automatic catch for retaining the said bolt when slid back, a hammer-catch for locking the hammer when cocked, and a safety-catch operating to place the said automatic catch out of action and to move the hammer-catch into engagement with the hammer, substantially as set forth.

5. In a firearm, the combination, with a frame, a receiver slidable in the frame, and a breech-bolt slidable in the receiver; of an automatic catch for retaining the said bolt when slid back, a hammer-catch for locking the hammer when cocked, and a safety-catch operating to place the said automatic catch out of action, to lock the said receiver to the said frame, and to move the hammer-catch into engagement with the hammer, substantially as set forth.

6. In a firearm, the combination, with a receiver, and a breech-bolt slidable therein; of an automatic catch arranged at one side of the receiver and operating to retain the said bolt when slid back, and a safety-catch pivoted to the rear end of the receiver and operating to place the automatic catch in and out of action, substantially as set forth.

7. In a firearm, the combination, with a frame provided with a groove and secured to the stock, a receiver slidable in the said frame, and a hammer; of a hammer-catch carried by the receiver and operating to lock the hammer when cocked, and a safety-catch pivoted to the end of the receiver and provided with

PR 0225

ET50403

a projection which interlocks with the said groove and moves the hammer-catch into engagement with the hammer, substantially as set forth.

8. In a firearm, the combination, with a receiver, and a breech-bolt slidable therein; of an automatic catch pivoted on one side of the receiver and operating to retain the said bolt when slid back, and a safety-catch pivoted to the end of the receiver and normally holding the automatic catch out of action, said safety-catch having a notch for receiving one end portion of the automatic catch when in action and for moving it out of action, substantially as set forth.

9. In a firearm, the combination, with a frame provided with shoulders, a receiver slidable in the said frame, and a breech-bolt slidable in the said receiver; of locking-dogs having their middle portions pivoted to the receiver and locking it to the breech-bolt when the said parts are slid forward, said dogs being operated positively in each direction by the said shoulders, substantially as set forth.

10. In a firearm, the combination, with a frame, a receiver slidable in the said frame, and a breech-bolt slidable in the said receiver; of locking devices securing the breech-bolt to the receiver when the said parts are slid forward, means for sliding the said parts forward, and a catch operating to prevent the receiver from being slid forward until after the breech-bolt has been slid forward, substantially as set forth.

11. In a firearm, the combination, with a breech-bolt, and a firing-pin slidable therein; of a key slidable in slots in the said bolt and pin and provided with a projecting head for holding the said pin retracted in the said bolt, and means for sliding the said key so as to permit the firing-pin to slide in the breech-bolt, substantially as set forth.

12. In a firearm, the combination, with a slidable breech-bolt, and a firing-pin slidable therein; of a key slidable in slots in the said bolt and pin and provided with an inclined portion and a projecting head for holding the said pin retracted in the said bolt, and a projection arranged in the path of the said inclined portion, whereby the key is slid in the slots to release the firing-pin as the breech-bolt is slid forward, substantially as set forth.

13. In a firearm, the combination, with a receiver, and a breech-bolt slidable therein and provided with a shoulder; of a slide in the receiver provided with a projection engaging with the said shoulder and affording a means for retracting the breech-bolt by hand, and an automatic catch pivoted to the said slide and engaging with the said shoulder when the slide is in its normal position and the breech-bolt is slid back, substantially as set forth.

14. In a firearm, the combination, with a receiver, and a breech-bolt slidable therein; of a slide in the receiver engaging with the breech-bolt, an operating-knob on the slide, a catch pivoted in the slide and provided with a ratchet-tooth at its rear end for holding the breech-bolt when retracted, a spring-operated push-pin slidable in the knob and engaging with the front end of the said catch, and means for holding the breech-bolt when retracted by the slide until the slide is restored to its normal position and the said catch engages with the breech-bolt, substantially as set forth.

15. In a firearm, the combination, with a frame secured to the stock, and a laterally-movable spring-pressed catch pivoted to the said frame; of a slidable breech-bolt receiver provided with a recess with which the said catch engages when the receiver is slid back, and a slidable breech-bolt which locks the catch in the said recess when retracted and frees it when slid forward, substantially as set forth.

16. In a firearm, the combination, with a frame secured to the stock, a trigger, and a sliding sear; of a slidable breech-bolt receiver and barrel rigidly secured together, a pusher pivoted at its middle part in the rear part of the said frame and having its upper part operatively connected with the receiver, and a spring-pressed piston carried by the middle part of the said frame and bearing against the lower part of the pusher below its pivot, whereby the receiver and barrel are slid forward, substantially as set forth.

17. In a firearm, the combination, with a lock-frame, and a spring-pressed hammer pivoted therein; of a sear slidable in the frame under the hammer, a sear-pawl articulated to the sear, a trigger for operating the sear-pawl, and a spring for retracting the sear-pawl and sear, substantially as set forth.

18. In a firearm, the combination, with a lock-frame provided with supports for the sear-pawl and guides for the sear, and a spring-pressed hammer pivoted in the said frame; of a sear slidable in the said guides, a sear-pawl articulated to the sear and provided with lugs which rest on the said supports, a trigger for operating the sear-pawl, and a spring for retracting the sear-pawl and sear, substantially as set forth.

19. In a firearm, the combination, with a lock-frame provided with an upwardly and forwardly inclined guide-chamber, a trigger, and a sliding sear; of a hammer pivoted to the front part of the frame below the front end of the chamber, a spring-pressed piston bearing against the hammer above its pivot, a barrel-pusher pivoted in the rear part of the frame above the rear end of the chamber, and a spring-pressed piston bearing on the said pusher below its pivot, said pistons being arranged in the said chamber, substantially as set forth.

In testimony whereof I affix my signature in presence of two witnesses.

PAUL MAUSER.

Witnesses:

WALDEMAR HAUPT,
EMIL L. GOLDSCHMIDT.

PR 0226

ET50404

May 15, 1928. E. R. STAHL 1,669,496

BOLT ACTION GUN

Filed Aug. 12, 1927 3 Sheets-Sheet 1

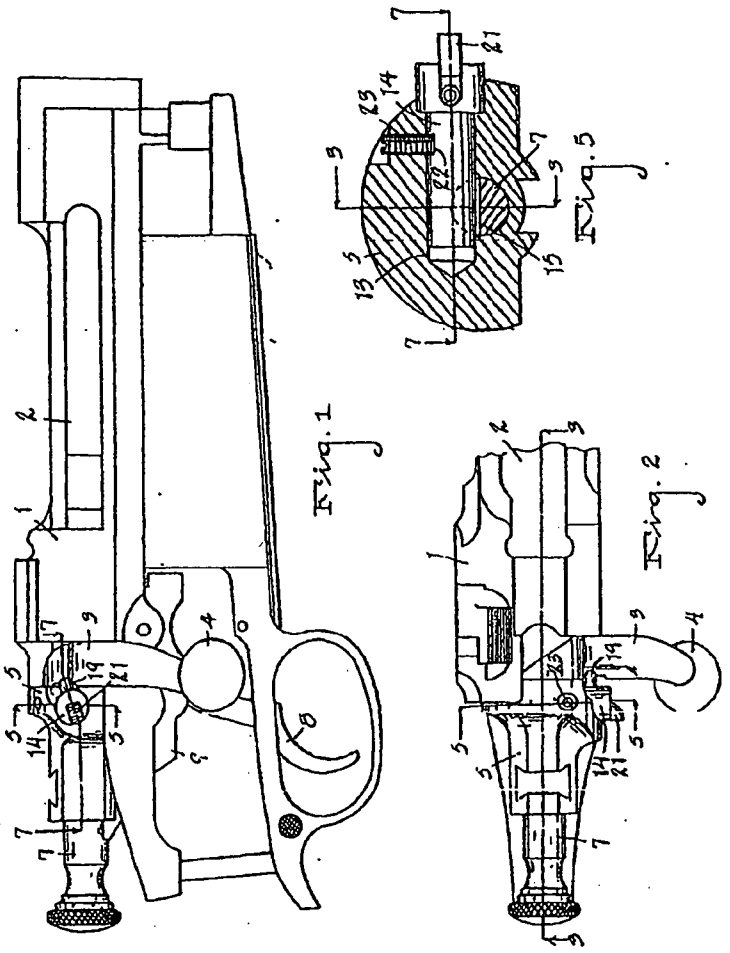

INVENTOR
Elmer R. Stahl
BY Chappell & Earl
ATTORNEYS

PR 0228

ET50406

May 15, 1928. 1,669,496

E. R. STAHL

BOLT ACTION GUN

Filed Aug. 12, 1927 3 Sheets-Sheet 2

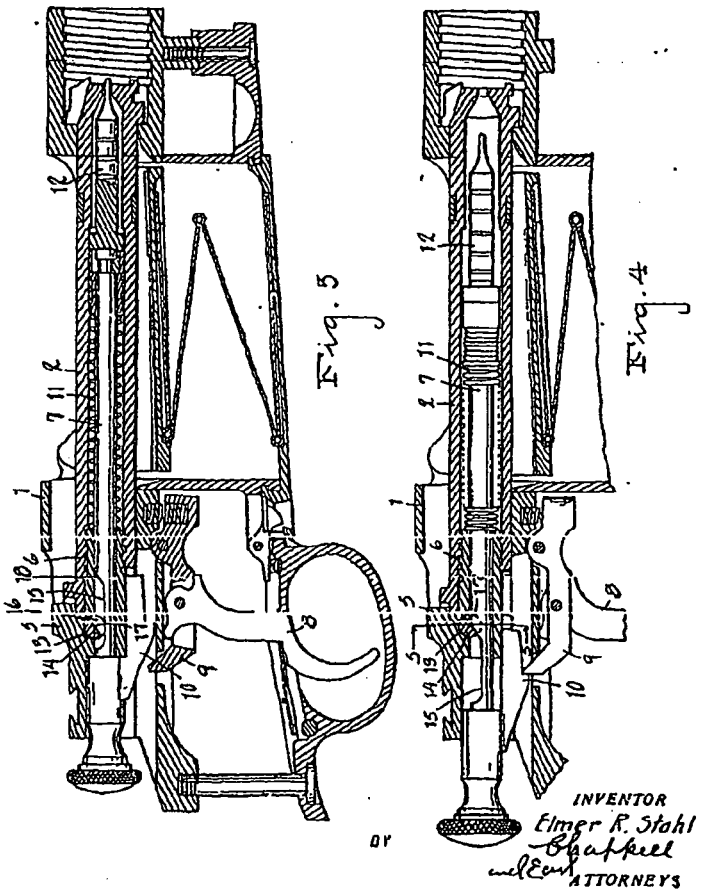

PR 0229

ET50407

May 15, 1928. 1,669,496

E. R. STAHL

BOLT ACTION GUN

Filed Aug. 12, 1927 3 Sheets-Sheet 3

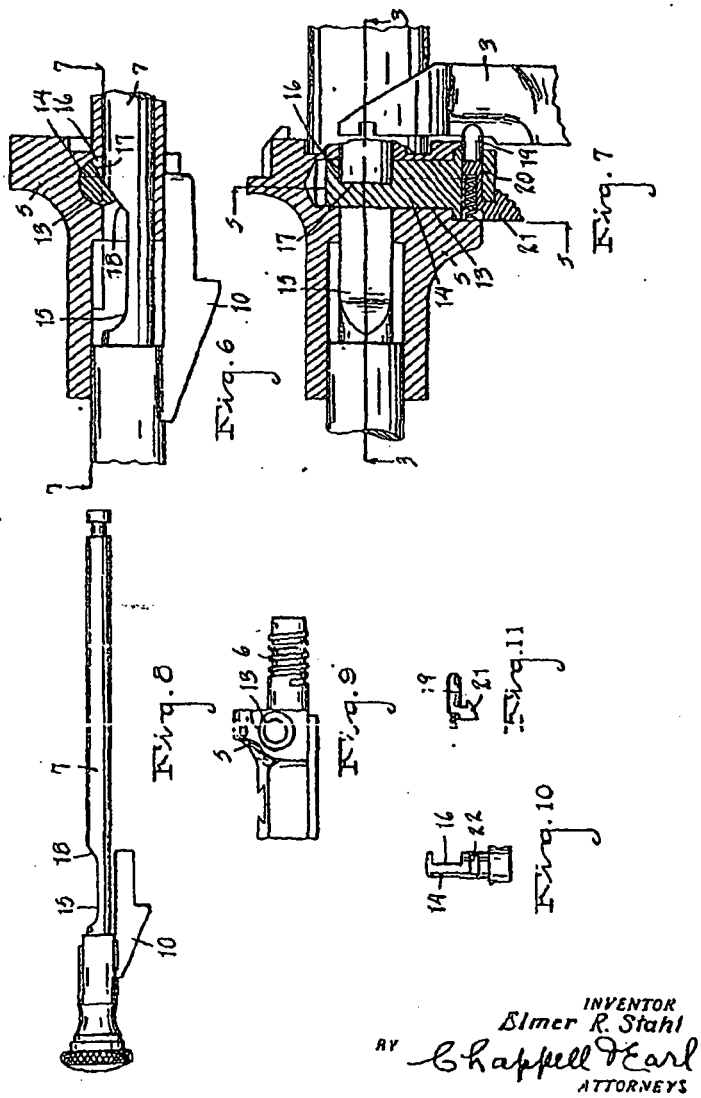

INVENTOR
Elmer R. Stahl
BY C. Rappell Earl
ATTORNEYS

PR 0230

ET50408

Patented May 15, 1928. 1,669,496

UNITED STATES PATENT OFFICE.

ELMER R. STAHL, OF DOWAGIAC, MICHIGAN.

BOLT-ACTION GUN.

Application filed August 12, 1927. Serial No. 212,492.

The main objects of this invention are:

First, to provide a bolt locking means for bolt action guns in which the flight of the firing pin is away from and unimpeded by the locking means.

Second, to provide a breech bolt locking means which is automatic in its operation.

Third, to provide an automatic breech bolt locking means which is capable of manual release.

Fourth, to provide a breech bolt locking means in which the parts are comparatively simple and are so formed and supported that they are not likely to be injured or rendered inoperative in use by severe or careless manipulation of the gun.

Objects relating to details and economics of construction and operation of my invention will definitely appear from the detailed description to follow.

The invention is defined and pointed out in the claims.

A structure which is a preferred embodiment of my invention is illustrated in the accompanying drawing, forming a part of this application, in which:

Fig. 1 is a side elevation of a gun action embodying the features of my invention, the stock and barrel and magazine being omitted.

Fig. 2 is a fragmentary plan view.

Fig. 3 is a longitudinal section on a line corresponding to line 3—3 of Figs. 2, 5 and 7, certain parts being shown in full lines for convenience in illustration, the firing pin being in firing position.

Fig. 4 is a fragmentary longitudinal section corresponding to Fig. 3 with the firing pin in retracted position.

Fig. 5 is a transverse section on line 5—5 of Figs. 1, 2, 4, and 7.

Fig. 6 is an enlarged detail partially in longitudinal section showing the firing pin in retracted or set position, with the breech bolt locking bolt in locking relation thereto.

Fig. 7 is a detail view partially in longitudinal section on line 7—7 of Figs. 1, 5 and 6.

Fig. 8 is a side elevation of the firing pin with its plunger removed.

Fig. 9 is a side elevation of the non-rotating portion of the breech bolt.

Fig. 10 is a plan view of the locking bolt.

Fig. 11 is a plan view of the locking bolt detent and its spring.

In the drawing similar reference characters refer to similar parts throughout the several views, and the sectional views are taken looking in the direction of the little arrows at the ends of the section lines.

Referring to the drawings, 1 represents the body or receiver portion of the breech bolt action. This is a standard commercial type and its structural details need not, therefore, be described.

The breech bolt 2 is mounted in the receiver for reciprocating and rotary movement as is common with gun actions of this type, the bolt being provided with a laterally projecting arm 3 having a hand piece 4 at its outer end.

The breech bolt sleeve 5 is non-rotatably supported for reciprocating movement with the barrel portion of the breech bolt, having threaded engagement therewith at 6.

The firing pin 7 is supported in the breech bolt and its sleeve for movement independently thereof. The trigger 8 is hung from the sear 9 which engages the keeper 10 of the firing pin when the firing pin is retracted or set, as shown in Fig. 4.

The firing pin is provided with an actuating spring 11 and a tappet or plunger 12.

The sleeve 5 is provided with a transverse bore 13 to receive and rotatably support the locking bolt 14, the firing pin having an elongated recess 15 to receive this bolt, the bore 13 in part intersecting the firing pin bore 15 in the sleeve 5.

The locking bolt has a segmental recess 16 which permits limited movement thereof and provides a flat face 17 coacting with the forwardly inclined shoulder 18 at the forward end of the recess 15 when the parts are in locking position, the firing pin in this position, as shown in Fig. 4, serving as a detent to support the locking bolt against rotation in releasing direction.

The locking bolt is provided with a detent 19 reciprocatingly mounted in a transverse bore 20 in the locking bolt, shown in Fig. 7, to coact with the arm 3 on the breech bolt. This detent is provided with a finger piece 21 which permits manual releasing of the detent should occasion require.

The locking bolt has a transverse kerf-like recess 22 engaged by the retaining screw 23 for holding the parts in assembled position.

With the parts thus arranged, when the

PR 0231

ET50409

breech bolt is actuated to set the trigger, the shoulder 18 of the firing pin is brought into engagement with the locking bolt, serving as a detent to support it against rotation, the parts being then in position shown in Figs. 4, 6 and 7, the arm 3 being engaged by the detent 19 and thereby locked in its initial position so that the breech bolt cannot be accidentally removed in position to impede the flight of the firing pin.

It will be observed that while the firing pin constitutes an element of the locking means, its flight is away from the locking means so that its movement is not impeded by the locking means; its movement in fact being entirely free or independent from such locking means.

I have illustrated and described my improvements in an embodiment which is highly practical. I have not attempted to illustrate or describe other embodiments or adaptations as I believe this disclosure will enable those skilled in the art to embody or adapt my improvements as may be desired.

Having thus described my invention, what I claim as new and desire to secure by Letters Patent, is:

1. In a firearm, the combination of a receiver, a breech bolt mounted for reciprocating and rotary movement in said receiver and provided with a laterally projecting arm, a non-rotatable sleeve mounted to reciprocate with said bolt, a firing pin operatively associated with said breech bolt and sleeve, a locking bolt rotatably mounted in said sleeve transversely of said firing pin, said firing pin having a transverse recess to receive said locking bolt, the front end of said recess being forwardly inclined providing a locking shoulder, said locking bolt having a transverse recess to receive said firing pin, the face of said recess being engaged by the said locking shoulder of the firing pin when the firing pin is in set position, and a spring actuated reciprocating detent disposed transversely of said locking bolt to engage said breech bolt arm when it is in its initial position, said detent being provided with a finger piece permitting the releasing of said breech bolt.

2. In a firearm, the combination of a receiver, a breech bolt mounted for reciprocating and rotary movement in said receiver and provided with a laterally projecting arm, a non-rotatable sleeve mounted to reciprocate with said bolt, a firing pin operatively associated with said breech bolt and sleeve, a locking bolt rotatably mounted in said sleeve transversely of said firing pin, said firing pin having a transverse recess to receive said locking bolt, said locking bolt having a transverse recess to receive said firing pin, and a spring actuated reciprocating detent disposed transversely of said locking bolt to engage said breech bolt arm when it is in its initial position, said detent being provided with a finger piece permitting the releasing of said breech bolt.

3. In a firearm, the combination of a receiver, a breech bolt mounted for reciprocating and rotary movement in said receiver, a non-rotatable sleeve mounted to reciprocate with said bolt, a firing pin operatively associated with said breech bolt and sleeve, and means for locking said breech bolt comprising a locking bolt rotatably mounted in said sleeve transversely of said firing pin, said firing pin having a transverse recess to receive said locking bolt, the front end of said recess providing a locking shoulder, said locking bolt having a transverse recess to receive said firing pin, the face of said recess being engaged by the locking bolt of the firing pin when the firing pin is in set position.

4. In a firearm, the combination of a receiver, a breech bolt mounted for reciprocating and rotary movement in said receiver and provided with a laterally projecting arm, a non-rotatable sleeve mounted to reciprocate with said bolt, a firing pin operatively associated with said breech bolt and sleeve, and a locking bolt rotatably mounted in said sleeve transversely of said firing pin to be engaged by the firing pin when the firing pin is in set position, said locking bolt having a spring actuated detent disposed to engage said breech bolt arm when it is in its initial position, said detent being manually releasable.

5. In a firearm, the combination of a receiver, a breech bolt mounted for reciprocating and rotary movement in said receiver, a non-rotatable sleeve mounted to reciprocate with said bolt, a firing pin operatively associated with said breech bolt and sleeve, and a locking member for said breech bolt rotatably mounted in said sleeve transversely of said firing pin to be engaged by the firing pin when the firing pin is in set position.

6. A firearm comprising a rotary and reciprocatory breech bolt, a non-rotating sleeve reciprocating with the bolt, a firing pin reciprocating with the sleeve and bolt and movable relative to said parts, and means for locking said bolt in firing position comprising a locking member mounted on said sleeve to cooperate with said bolt; said firing pin cooperating with said locking member to hold the same in bolt locking position when the firing pin is in set position, the flight of the pin being away from said locking means whereby its movement is unimpeded by the locking means.

7. In a firearm, the combination of a receiver, a breech bolt mounted for reciprocating and rotary movement in said receiver, a non-rotatable sleeve mounted to reciprocate with said bolt, a firing pin operatively associated with said breech bolt and sleeve,

PR 0232

ET50410

and a locking member for said breech bolt mounted in said sleeve to be engaged by the firing pin when the firing pin is in set position.

8. A firearm comprising a rotary and reciprocatory breech bolt, a non-rotating sleeve reciprocating with the bolt, a firing pin operatively associated with said bolt and sleeve and movable relative thereto, and means for locking said breech bolt in firing position comprising a locking member mounted on said sleeve to cooperate with said breech bolt, said firing pin cooperating, when in set position, with said locking member to hold the same in breech bolt locking position, the flight of the firing pin being away from said locking member whereby its movement is unimpeded by the locking means.

9. A firearm comprising a rotary and reciprocatory breech bolt, a non-rotating sleeve reciprocating with the bolt, a firing pin operatively associated with said bolt and sleeve and movable relative thereto, and means for locking said breech bolt in firing position comprising a locking member mounted on said sleeve to cooperate with said breech bolt, said firing pin cooperating, when in set position, with said locking member to hold the same in breech bolt locking position.

10. A firearm comprising a rotary and reciprocatory breech bolt, a firing pin operatively associated therewith, and a breech bolt locking means cooperating with said firing pin when the firing pin is in set position to lock the breech bolt, the firing stroke of said firing pin being away from said locking means.

11. A firearm comprising a rotary and reciprocatory breech bolt, a firing pin operatively associated therewith, and a breech bolt locking means, said firing pin when in set position constituting a detent for the breech bolt locking means, the firing stroke of said firing pin being away from said locking means.

12. A firearm breech bolt action comprising a breech bolt mounted for reciprocatory and rotary movement, a firing pin operatively associated with said breech bolt, and a breech bolt locking means operatively associated with said breech bolt and firing pin, the firing pin acting when set to hold said locking means in locked position, the flight of the firing pin being away from and unimpeded by said locking means.

13. A firearm breech bolt action comprising a breech bolt mounted for reciprocatory and rotary movement, a firing pin operatively associated with said breech bolt, and a breech bolt locking means operatively associated with said breech bolt and firing pin, the firing pin acting when set to hold said locking means in locked position.

14. A breech bolt firearm action consisting of a breech bolt, automatic means for locking said breech bolt in initial position after actuation to set the firing pin, and a firing pin constituting a detent for said locking means, the flight of the firing pin being free and unimpeded by said locking means.

15. A breech bolt firearm action consisting of a breech bolt, automatic means for locking said breech bolt in initial position after actuation to set the firing pin, and a firing pin constituting a detent for said locking means.

16. A firearm breech bolt action comprising a breech bolt mounted for reciprocatory and rotary movement, a firing pin operatively associated with said breech bolt, and a breech bolt locking means operatively associated with said breech bolt and firing pin, the firing pin constituting a detent for said locking means, the flight of the firing pin being free and unimpeded by said locking means.

17. A firearm breech bolt action comprising a breech bolt mounted for reciprocatory and rotary movement, a firing pin operatively associated with said breech bolt, and a breech bolt locking means operatively associated with said breech bolt and firing pin, the firing pin constituting a detent for said locking means.

In witness whereof I have hereunto set my hand.

ELMER R. STAHL.

PR 0233

ET50411

S

PR 0234

ET50412

Jan. 12, 1971 N. A. WELCH ET AL 3,553,877

SAFETY LOCK FOR FIREARMS

Filed June 28, 1968 2 Sheets-Sheet 1

Fig. 1.

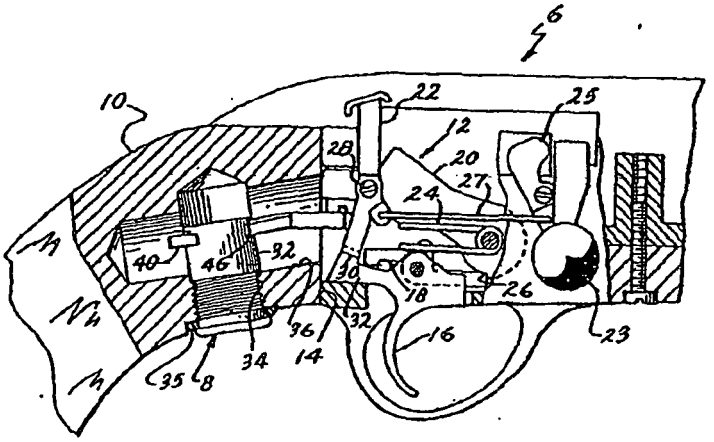

Fig. 2.

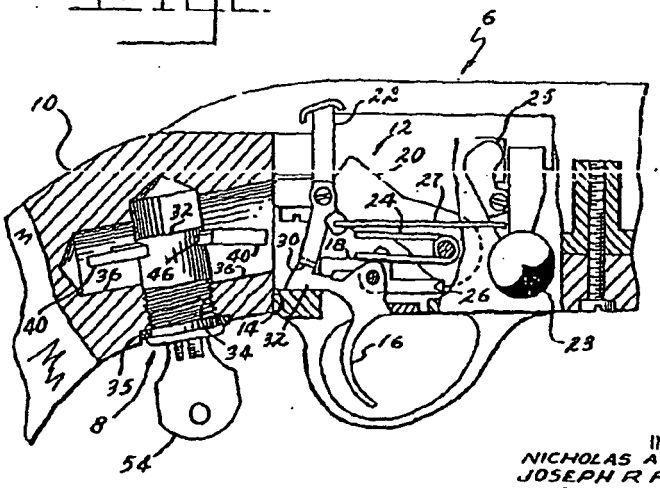

INVENTORS
NICHOLAS A. WELCH
JOSEPH R FERRARA
BY Chapin, Neal & Dempsey
Attorneys

PR 0235

ET50413

Jan. 12, 1971 N. A. WELCH ET AL 3,553,877

SAFETY LOCK FOR FIREARMS

Filed June 28, 1968 2 Sheets-Sheet 2

Fig.3.

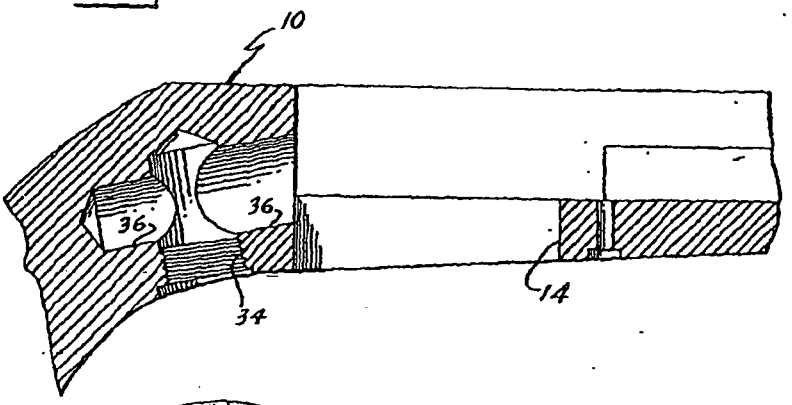

Fig.4.

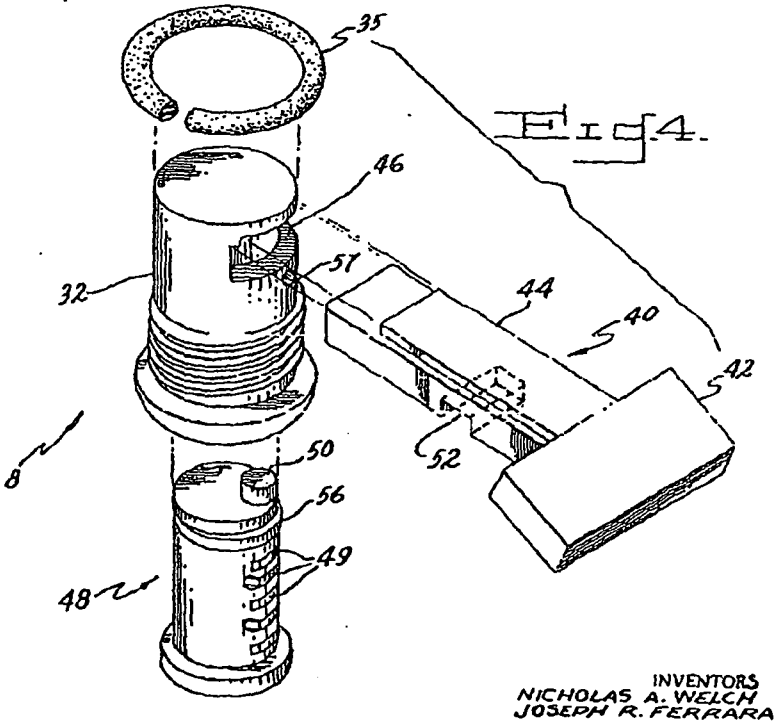

INVENTORS
NICHOLAS A. WELCH
JOSEPH R. FERRARA
BY Chapin, Neal & Dempsey
Attorneys

PR 0236

ET50414

United States Patent Office

3,553,877

Patented Jan. 12, 1971

1

3,553,877

SAFETY LOCK FOR FIREARMS

Nicholas A. Welch, West Hartford, Conn., and Joseph R. Ferrara, Agawam, Mass., assignors to Emhart Corporation, Bloomfield, Conn., a corporation of Connecticut

Filed June 28, 1968, Ser. No. 741,098

Int. Cl. F41c 17/00, 17/02, 17/08

U.S. Cl. 42—70 8 Claims

ABSTRACT OF THE DISCLOSURE

A safety lock for firearms having a safety movable to and from positions of blocking relationship relative to movement of the safety of the gun's firing mechanism, and a key lock carried within the stock of the gun and having a bolt movable in response to operation of a key for selective engagement with the safety to prevent release of the safety unless the bolt of said lock is first released by operation of the key.

BACKGROUND

Numerous types of safety devices have been used for firearms over a great many years. Of course, the safety latch or lever is well known in the design and manufacture of firearms. In addition to this, however, it has long been desired to prevent the unauthorized or accidental use of firearms and to this end a great many locking mechanisms have been suggested. Most commonplace among these mechanisms are the separate and removable locks which are designed to be fitted over or onto the trigger or trigger guard of the gun. While these locks have proved effective, they are not as widely used as would normally be expected, and this is thought to stem from the fact that they are entirely separate from the gun and thus somewhat awkward and inconvenient to use. Thus despite the fact that these locks greatly reduce the chances of unauthorized or accidental use of firearms, there is a tendency for many gun owners to forego the purchase or use of these locks.

There have also been proposed in recent years built-in locks. In general, these have substantially increased the cost of the manufacture of the gun and require special lock mechanisms and modification of one or more elements of the firing mechanism for operative cooperation with the lock mechanism. These locks have not found broad commercial acceptance since their construction appreciably increases the assembly procedures and manufacturing costs for guns so equipped.

The principal object of this invention is the provision of a built-in gun lock which can be assembled in a number of existing gun models without the need for extensive tooling or modification of the action of the gun.

It is another object of this invention to provide a built-in gun lock which can be installed either by the manufacturer, gun dealer or purchaser without the use of any special tools or equipment.

Another object of this invention is to provide a built-in gun lock which may be fitted into the stock of a gun without requiring modification of any of the components of the gun's firing mechanism.

A yet further object of this invention is to provide a built-in gun lock arrangement which adapts a conventional key lock to existing model gun stocks with minimum modification.

The above and other objects and advantages of this invention will be more readily apparent from the following description and with reference to the accompanying drawings:

2

FIG. 1 is a cross section elevational view of a firearm of this invention in a locked condition;

FIG. 2 is an elevational view similar to FIG. 1 showing the gun in an unlocked condition;

FIG. 3 shows the stock of the firearm shown in FIGS. 1 and 2; and

FIG. 4 is an exploded view of one type of suitable lock for use of this invention.

Referring in detail to the drawings, in FIG. 1 a gun is shown generally at 6 equipped with a built-in lock 8. The purpose of the lock is to prevent operation of the firing mechanism when locked, and permit normal operation of the gun and its safety mechanism when unlocked. As shown, the lock is approximately flush with the undersurface of the stock to the rear of the trigger guard.

The gun comprises a stock 10 and a firing mechanism 12 fitted through a well 14 provided in the stock. The firing mechanism comprises a trigger 16, sear 18, hammer 20, safety lever 22, and a sear spring 24. For firing the gun, the trigger is rotated against the pressure of spring 24 until the front end of the sear 18 is released from the notch 26 of the hammer. The upper limb of spring 24 urges the hammer toward striking engagement with the firing pin (not shown). The safety lever 22 is pivotable about a pin 28 so that its lower end 30 is selectively engageable with the upper surface of the trigger extension 32. When the safety is engaged with the trigger extension, as shown in FIG. 1, the trigger is blocked from rotating, thus locking the sear 18 in the notch 26 of the hammer 20, thereby preventing firing of the gun. In the embodiment shown, upward rotation of the bolt 23 automatically operates safety 22, since the bolt cams lever 25 rearwardly and through linkage 27 causes lever 22 to pivot to its "safe" position.

Means to lock the gun is provided, in addition to the safety lever 22 which otherwise could be operated at will or accidentally by anyone who comes into possession of the gun. In accordance with this invention, a key lock is disposed so that its bolt will prevent unauthorized, inadvertent or accidental release of the safety mechanism. As shown, the locking means comprises the lock 8 which may be of conventional construction with a lock cylinder 32 fitted into a bore or hole 34 extending into the stock 10 from a point behind the trigger guard. The stock is also provided with a second bore, channel or passage 36 extending transversely from the first bore into communication with the well 14 of the stock.

The lock 8 includes a rectilinearly reciprocable bolt 40 which may be of conventional T-shaped configuration, including a head 42 and a shank 44 (FIG. 4). The shank is slidably disposed in slot or guideway 46 of the lock cylinder. A key plug 48, shown in FIG. 4, includes a number of spring loaded tumblers 49 operated by the bitted edge of a key blade, is rotatably disposed within the lock cylinder, and includes a cam pin 50 which projects from its inner end face. The plug is also provided with a spring loaded retainer 56 to releasably retain the plug in the lock cylinder. The cam pin projects into a slot 52 formed in the undersurface of the shank portion of the bolt 40 and extending transversely of the shank. With rotation of the key plug by an appropriate key 54, the cam pin is rotated from a position adjacent one edge of the cylinder to a diametrically opposite position. The diametrical throw of the cam pin is parallel to the axis of the transverse bore 36 so that the head of the bolt is moved into engagement with the after edge portion of the safety lever when the gun is locked as shown in FIG. 1, and is sufficiently clear of the safety lever as shown in FIG. 2 to permit normal operation thereof when the gun is unlocked by the use of the key.

The lock selected is preferably one of conventional construction, but in which the locking bolt is removably

PR 0237

ET50415

carried directly in the lock cylinder so the bolt and cylinder can be assembled in situ in the bores 34 and 36 of the gun stock. Thus, in the embodiment shown, the lock may be assembled into the gun by screwing cylinder 32 into the threaded bore 34 which extends into the structure until a compressible collar, such as an O-ring 35, is compressed by the head of lock 8 with the slot or guideway 46 registered in alignment with transverse slot 36.

The O-ring 35 thus allows the cylinder to be screwed in tightly to the correct angular position for reception of the lock bolt 40 despite lack of orientation of the threads provided in the bore 34. Another purpose of the O-ring is to act as a braking member between the gun stock of the cylinder body to prevent loosening of the lock. This is important because even though the cylinder cannot be unscrewed from the stock after the lock bolt is installed, even a small amount of looseness of the lock cylinder would connote inferior workmanship.

The cylinder 32 is fitted to the bore with the bolt 40 and key plug 48 removed. Once the cylinder is correctly positioned in the stock, the lock bolt is fitted into the guideway 46 of the cylinder with its transverse slot 52 oriented downward to receive the cam pin 50 on the end face of the key plug. Thereafter, the key plug is inserted so that the cam pin fits into the transverse slot of the locking bolt. The retainer 56 is pressed in for installation of the plug in the lock cylinder. A cooperating slot in the inner surface of the cylinder receives the retainer to hold the key plug in place. The plug can be removed by pressing the retainer inward using a pointed implement through hole 57 provided in the lock cylinder or barrel. After the lock bolt and cylinder have been installed in the gun stock, as described, the firing mechanism is installed in the well 14 of the stock in the conventional manner.

In the manufacture of those guns which are not to be equipped with a key lock, the manufacturing procedure related to the drilling of the holes 34 and 36 may be merely omitted. Alternatively, if desired, locks may be provided separately for installation by the dealer or consumer. In such cases a small blank plug of any suitable material, such as plastic or wood, may be screwed into the bore 34 to provide an essentially flush finish with the surrounding areas of the gun stock. The plug may be provided with a groove so that it can be readily removed by a screw driver or other suitable means.

In the operation of a gun equipped with a key lock, the manufacturer would package the guns in a locked condition, such as shown in FIG. 1 of the drawings. Preparatory to operation, the key 54 would be fitted into the lock 8 and rotated to unlock the lock, as shown in FIG. 2. The key may then be removed and when the user is prepared to fire, the gun is loaded in the usual manner and the safety lever 22 moved forwardly so that its lower end 30 clears the trigger extension 32. The gun may then be fired in a normal fashion. After any firing is completed, the safety is moved to "safe." For the gun shown, the safety would automatically be in this position, since each operation of the bolt 23 pivots lever 25 rearwardly and by linkage 27 the safety lever 22 is automatically moved to the safe position shown in FIG. 2. The key would then be inserted in the lock and rotated so that the head of the lock bolt is moved into juxtaposition with the after edge of the safety lever 22. Consequently, the safety lever cannot be disengaged without the use of the appropriate key. This simple but most effective locking arrangement, if properly used by the consumer would greatly reduce accidental or unauthorized use of firearms, and hopefully would reduce the number of accidents which occur as the result of such improper use of firearms.

Having thus described the invention, what is claimed is:

1. Lock for firearm having a firing mechanism, an opening extending into said firearm in communication with said firing mechanism, a key having bitted edges, a key

operable lock having tumblers operable by the bitted edges of said key, said lock being installed in the said opening and including a bolt and bolt operating means for moving said bolt into and out of juxtaposition with the firing mechanism to selectively lock and unlock the same in response to operation of said lock, said bolt being separable from the lock for assembly therewith after the lock is installed in the opening of said firearm.

2. Lock for firearm as set forth in claim 1 in which said firearm includes a stock having a first bore extending into said stock adjacent the firing mechanism to receive said lock, and a second bore extending from the first bore to the firing mechanism, said bolt being disposed in said second bore.

3. Lock for firearms having a stock and firing mechanism, a key having bitted edges, a key operable lock having tumblers operable by the bitted edges of said key, said lock being fitted into a first bore extending into said stock at a point adjacent said firing mechanism, a second bore in said stock opening from the first bore to said firing mechanism, said lock including a lock cylinder having a rotatable key plug and a rectilinearly movable lock bolt, means for operating said lock bolt in response to rotation of said key plug by said key, said bolt being separable from the lock cylinder for assembly therewith after the cylinder is installed in said first bore.

4. Lock for firearms having a stock and a firing mechanism, a key lock fitted into a first bore extending into said stock at a point rearward of the firing mechanism, and a second bore in said stock opening from the first bore to said firing mechanism, a key having bitted edges, said key lock being operable by the bitted edges of said key and including a bolt rectilinearly movable into and out of juxtaposition with said firing mechanism to selectively lock and unlock the same in response to rotation of a key in said lock.

5. Lock for firearms having a stock and a firing mechanism equipped with a safety movable rearwardly from a "safe" position relative to the firing mechanism to permit firing operation of the same, a key having bitted edges, and a key operated lock being operable by the bitted edges of said key and disposed in said stock rearward of said firing mechanism and including a key plug rotatably disposed in a lock cylinder and including tumblers and a linearly reciprocable lock bolt movable in response to rotation of said key plug into and out of a blocking position relative to said safety lever to prevent the rearward movement of said lever.

6. Lock for firearms having a stock and a firing mechanism equipped with a safety lever movable rearwardly to a "firing" position and forwardly to a "safe" position in which said lever is engaged with the trigger of said firing mechanism to prevent firing movement of the same, a key having bitted edges, and a key lock having tumblers operable by the bitted edges of said key and disposed in said stock, said lock including a separable bolt carried by said lock and rectilinearly movable in response to rotation of a key in said lock, said bolt being disposed in a longitudinal channel in said stock extending to said safety lever.

7. Lock for firearms having a stock and a firing mechanism equipped with a trigger safety lever pivotable into and out of engagement with the trigger of said firing mechanism to prevent firing movement of the same, said stock having a well receiving said firing mechanism and a key lock fitted into a bore extending into the stock adjacent the after end of said firing mechanism, and a passage in said stock disposed transversely of said bore and providing communication between said bore and well, said key lock including a rotatable key plug and a reciprocable bolt movable longitudinally in said passage for movement into and out of blocking engagement with said safety lever to selectively prevent and permit movement of the safety in response to rotation by a key of said key plug.

PR 0238

ET50416

8. Lock for firearms having a stock and a firing mechanism equipped with a trigger safety movable into and out of engagement with the trigger of said firing mechanism to prevent firing movement of the same, said stock having a well receiving said firing mechanism and a key lock cylinder having a slot diametrically extending through the inner end thereof, said cylinder threaded into a bore extending into the stock rearward of the firing mechanism, a resilient ring compressed between the head of said cylinder and said stock for aligning said slot with a passage provided in said stock and extending diametrically through said bore to said well to provide communication therebetween, said cylinder having a rotatable key plug disposed therein and drivingly engaged with a separable lock bolt carried in said slot and reciprocably movable in said passage for movement into and out of blocking engagement with said safety to selectively prevent and permit movement of the safety in response to rotation of said key plug.

References Cited

UNITED STATES PATENTS

2,174,971	10/1939	Crockett	42—70
2,742,726	4/1956	Feller	42—70
2,945,316	7/1960	Mulno	42—70

BENJAMIN A. BORCHELT, Primary Examiner

C. T. JORDAN, Assistant Examiner

U.S. Cl. X.R.

42—1

PR 0239

ET50417

United States Patent

Cravener

[15] 3,673,725

[45] July 4, 1972

[54] TAMPER-PROOF LOCK FOR SMALL ARMS

[72] Inventor: James A. Cravener, 1627 5th Avenue, Ford City, Pa. 16226

[22] Filed: Oct. 23, 1970

[21] Appl. No.: 82,932

[52] U.S. Cl. ..... 42/1 R, 42/70 R, 42/70 E, 42/70 F

[51] Int. Cl. F41c 17/00, F41c 17/08

[58] Field of Search ..... 42/1 R, 1 Y, 70 R, 70 E, 70 F

[56] References Cited

UNITED STATES PATENTS

2,945,316	7/1960	Muñó	42/1 R
3,553,877	1/1971	Welch et al.	42/1 R

FOREIGN PATENTS OR APPLICATIONS

20,373	6/1905	Austria	42/70 R

Primary Examiner—Benjamin A. Borchelt
Assistant Examiner—C. T. Jordan
Attorney—Berman, Davidson & Berman

[57] ABSTRACT

A safety lock for small arms, said lock preventing opening, breaking, loading or discharge of the piece. The lock comprises a pin mounted in a selected portion of the small arm. The pin is axially advanceable and retractable by means of a separate externally applied key which at all times is retained by the owner. The pin, when in one of its extreme positions, engages a portion of the conventional small arms mechanism to lock the gun against firing, loading or even opening of the action. The gun is, therefore, rendered "tamper-proof" until application of the appropriate key.

6 Claims, 12 Drawing Figures

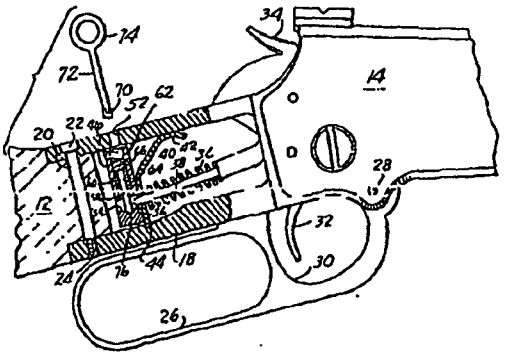

PR 0241

ET50419

FIG. 1.

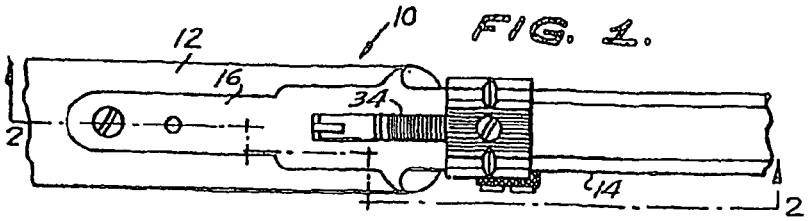

FIG. 2.

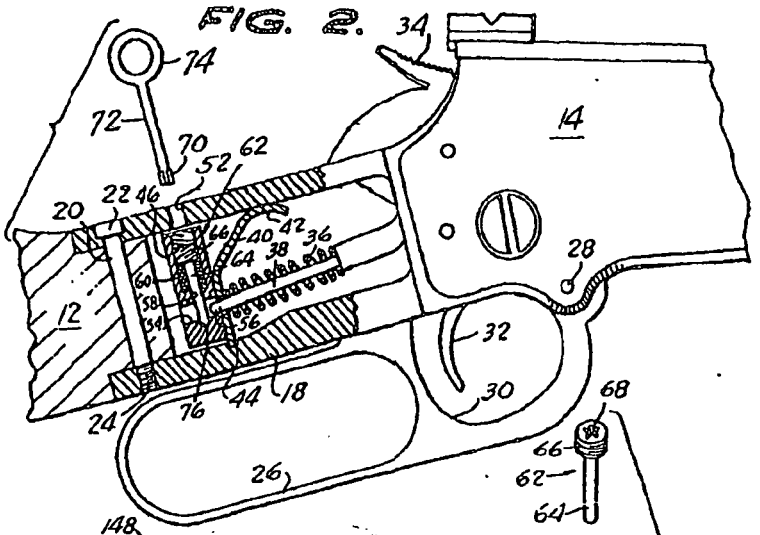

FIG. 3.

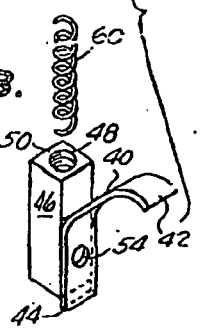

FIG. 8.

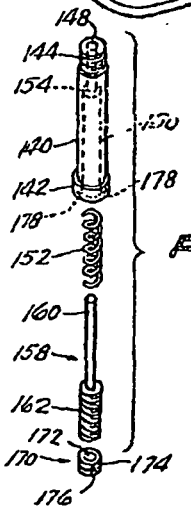

INVENTOR.
JAMES A. CRAVENER,
BY
Berman, Davidson & Berman,
ATTORNEYS.

PR 0242

ET50420

FIG. 4.

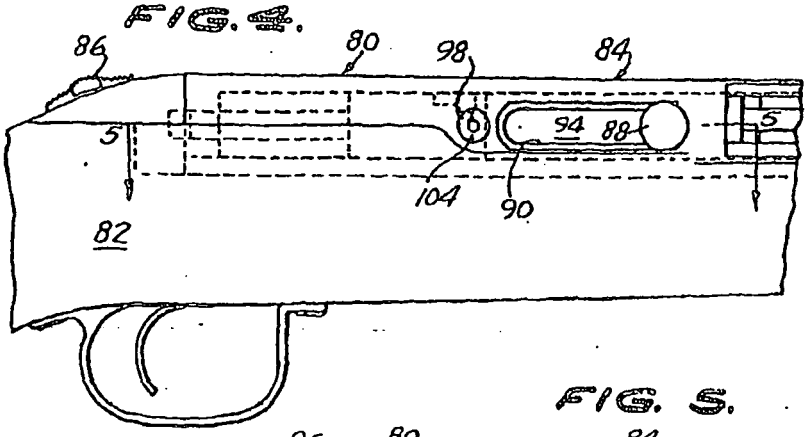

FIG. 5.

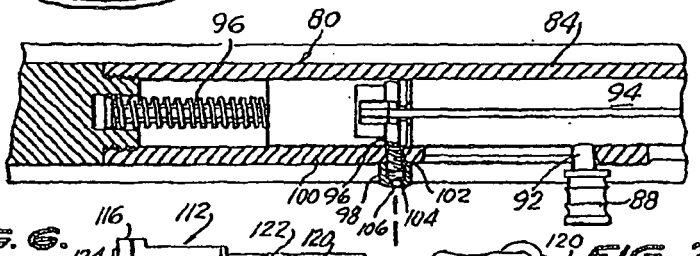

FIG. 6.

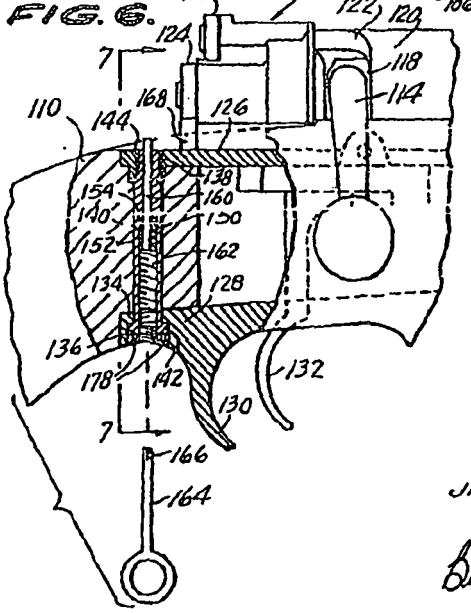

FIG. 7.

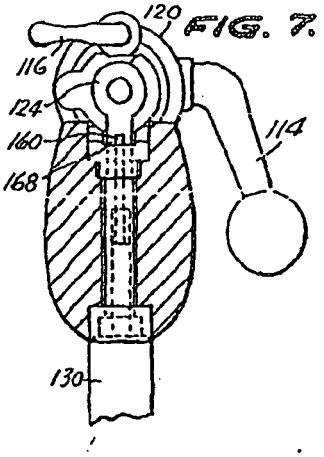

INVENTOR.
JAMES A. CRAVENER,
BY
Berman, Davidson & Berman,
ATTORNEYS.

PR 0243

ET50421

FIG. 9.

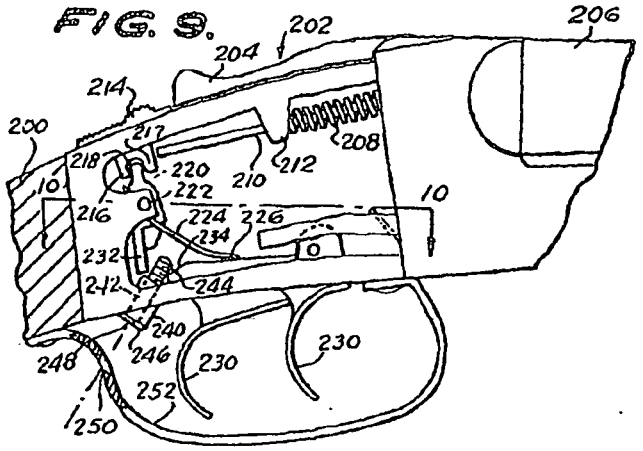

FIG. 10.

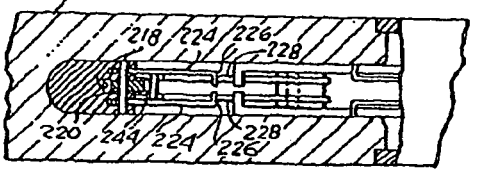

FIG. 11.

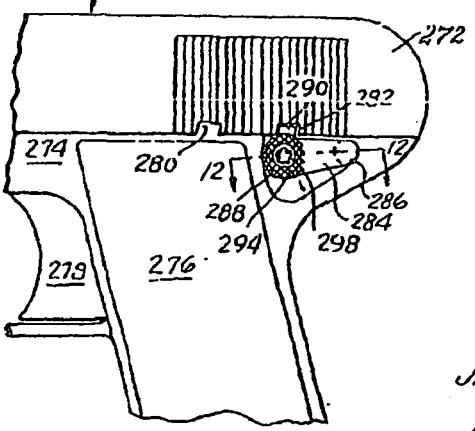

FIG. 12.

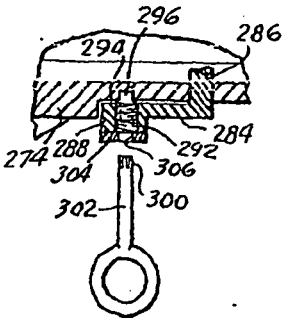

INVENTOR.
JAMES A. CRAVENER,
BY
Dolmans, Davidson & Dorman,
ATTORNEYS.

PR 0244

ET50422

TAMPER-PROOF LOCK FOR SMALL ARMS

BACKGROUND OF THE INVENTION

Almost without exception all small arms are supplied at the factory with a safety device which, when put in "safe" position, will prevent accidental discharge of the gun. Such safety means, however, are freely manipulable by anyone in whose hands the gun is placed. As a result, deaths and injuries due to accidental discharge of small arms seems to be noted almost daily in the press. A surprisingly large proportion of such accidents occur, not in the field, as on a target range or a hunting trip, but in or near the residence of the owner, and of such "domestic" accidents, a very large proportion occur because the gun is being handled by someone unfamiliar with such small arms and therefore are unable to detect whether or not the gun is ready for discharge.

The present invention makes it possible for the owner of virtually any form of small arms currently marketed to provide, in addition to the normal factory applied safety device, an additional lock operable by means of a separate, externally applied key, which key remains in the owner's possession while the gun is at rest in a gun case, on a crowded shelf, or in a bureau drawer, in all of which locations any gun is vulnerable to mishandling by an inexperienced person.

It is an object of this invention to provide, in effect, a tamper-proof lock for all forms of small arms by which any particular piece may be locked by the owner before it is stowed away, the locking being accomplished by a separate, externally applied key which remains in the possession of the owner, with the result that while the gun is in storage, it is impossible for any person not equipped with the proper key to discharge, load or even to open the action of the particular piece.

Such a lock admittedly would be impracticable for field use as in hunting or target shooting. In field use, the conventional safety with which almost all small arms are equipped is perfectly adequate. At home, however, the gun rests in a cabinet, a bureau drawer, or a closet for weeks at a time and the present invention is concerned primarily with locking the piece so that unauthorized handling cannot possibly result in accidental discharge.

The above and other objects will be made clear from the following detailed description taken in connection with the annexed drawings, in which:

FIG. 1 is a top plan view of a conventional rifle of the lever action type;

FIG. 2 is a side elevation of FIG. 1, with parts broken away to show the mounting of the improved tamper-proof lock;

FIG. 3 is an exploded perspective view of the locking means shown in cross-section in FIG. 2,

FIG. 4 is a side elevation of an automatic type rifle provided with a tamper-proof safety lock;

FIG. 5 is a section on the line 5—5 of FIG. 4;

FIG. 6 is a side elevation partly in section of a conventional bolt action rifle;

FIG. 7 is a section on the line 7—7 of FIG. 6;

FIG. 8 is an exploded perspective view of the parts shown in cross-section in FIG. 6;

FIG. 9 is a side elevation partly in section showing the safety lock applied to a double-barreled, hammerless shotgun of the twin trigger type;

FIG. 10 is a section on the line 10—10 of FIG. 9;

FIG. 11 is a side elevation of the back portion of a hammerless automatic pistol; and

FIG. 12 is a section on the line 12—12 of FIG. 11.

In FIGS. 1 and 2, a typical lever action magazine type rifle is generally designated 10. The portion illustrated has a stock 12 and an action portion 14. The action portion has a pair of vertically spaced, rearwardly extending arms 16 and 18 which are embedded in the stock 12 and secured in position by a cap screw 20 which has a round head embedded in the upper arm 16 and a threaded end 24 engaging the lower arm 18. The action is under the control of a conventional lever 26 which is

pivoted to the action 14 at 28 and has a portion 30 forming a guard for a conventional trigger 32. The action 14 includes a conventional hammer 34 which is cocked whenever the lever 26 is actuated.

The hammer is impelled to firing position by a spring 36 which surrounds a guide pin 38. The guide pin 38 passes through a spring 36 which bears upon a conventional backing spring 40, one end 42 of which slidably bears upon the upper arm 16 while the opposite end 44 bears against a shoulder formed in the lower arm 18.

The parts making up the improved tamper-proof storage lock are detailed in FIGS. 2 and 3. To install the device, the cap screw 20 is withdrawn and the stock 12 is separated from the action 14 leaving the arms 16 and 18 exposed. A lock body portion 46 is then welded to the backing spring 40, as best seen in FIG. 3. The body portion 46 has at its upper end a central cylindrical bore 48 which for a portion of its depth is internally screw threaded, as indicated at 50. A keyhole 52 is then drilled through the upper arm 16 in a location to provide axial registry with the bore 48. Adjacent its lower end the body portion 46 is provided with a transverse bore 54 which, at full cock of the hammer 34, receives the end 56 of the guide pin 38. With the hammer 34 in its fired position, as indicated in FIG. 2, the end 56 penetrates the transverse bore 54 in the block 46. At the bottom of the bore 48 there is formed a short central bore 58 which intersects the transverse bore 54.

A compression spring 60 then is placed in the bore 48 after which the locking member, generally designated 62, is inserted. The lower portion of the member 62 comprises a locking pin 64 sized to enter and be guided in the small bore 58. The pin 64 has an externally threaded head 66 which engages the thread 50 of the bore 48. A depression 68 is formed in the top surface of the head 66 and is centered under the aperture 52 of the upper arm 16.

As seen in FIG. 3, the depression 68 is generally star-shaped with five radially projecting arms. This is completely arbitrary. The chief objective in selecting a design for the depression 68 is that it shall not receive the bit of a conventional phillips screwdriver or the bit of a conventional allen wrench. Such screwdrivers and wrenches may be procured at any hardware store and it is essential to the present invention that no such readily available tool may be utilized to turn the head 66. The depression 68 may be engaged by mating lugs 70 formed on the shank 72 of the key having a conventional head 74. The lugs 70 of the key 72 are sized to pass through the aperture 52 in the upper arm 16. The head 74 is designed for convenient mounting on a key ring which remains in the permanent possession of the owner. If the lugs 70 are engaged with the arms of the depression 68, then when the key is turned, the threads 50 bring the pin 64 downward into engagement with a socket 76 formed in the underside of the transverse bore 54. In this position, the pin 64 is located to engage the end 56 of the guide member 38 which, as previously noted, is connected to the hammer 34, and moves to the left of the position in FIG. 2 when the hammer is cocked. With the parts in position, shown in FIG. 2, the hammer 34 cannot be cocked. Therefore, the entire action 14 is immobilized in closed, uncocked position and can be released only by using the key 72 to move the pin 64 from its position across the path of the end 56.

It should be emphasized that the formation of the male key and the female screw head is a matter of completely arbitrary selection. For example, the male and female parts could be reversed. For an additional example, the female portion could be an arbitrary pattern of separate depressions which could be of arbitrary, individual cross-section. The male part would then mate with the pattern and with the individual cross-sections. All such variations may be referred to as "coded formations".

FIGS. 4 and 5 illustrate a typical semi-automatic rifle. Semi-automatic guns fire each time the trigger is pulled. Fully automatic guns keep firing as long as the trigger is in rearward position. It is well known to gunsmiths that any semi-automatic rifle can be converted easily into fully automatic action,

PR 0245

ET50423

though it is extremely rare for such a rifle to be supplied to a customer in condition for full automatic fire. The point is made here since hereinafter any reference to an "automatic" firearm shall be deemed to include both the fully automatic and semi-automatic types.

Guns of the type illustrated in FIGS. 4 and 5 usually have a magazine located in a tube which runs through the stock or in a tube underlying the barrel or, occasionally, in a clip extending transversely of the barrel. The particular magazine arrangement has nothing whatever to do with the present invention and is not illustrated here.

In FIGS. 4 and 5, the gun generally is designated 80 and usually has a combination stock and forepiece 82. The action 84 is insert into the stock and forepiece 82 and carries a conventional thumb-operated safety 86. A knob 88 is slidable in a slot 90 in the action 84. As shown in FIG. 5, the knob 88 has a shank 92 which goes into a sleeve 94. When the knob 88 is drawn rearwardly or to the left of FIG. 4, the slide 94 operates the entire action. The rearward or leftward stroke compresses the hammer spring 96 to cock the piece and to operate the extractor and ejector, not shown. At the rearward end of its stroke it picks up a fresh cartridge out of the magazine of whatever type and on the forward stroke (back to the position of FIGS. 4 and 5) injects a fresh cartridge into the breech, leaving the hammer cocked against the spring 96. In the particular model illustrated, the knob 88 reciprocates as each shot is fired. In many other models, however, the sleeve 94 actuates only the cocking mechanism and the sleeve along with the knob 88 remains stationary during the firing operation. All this, however, is immaterial so far as the present invention is concerned.

The sleeve 94 is provided with a rearwardly facing shoulder 96. In order to apply and utilize the present invention, a sleeve 98 is welded to a wall 100 of the action 84. The sleeve 98 and the wall 100 are first drilled and then tapped, after which a conical nose screw 102 is threaded into the sleeve 98 and the wall 100. The head of a screw has formed therein a depression similar to the depressions 68 of the screw 62 shown in FIG. 3. A disc 104 is then welded to the sleeve 98 and has a central aperture 106 through which a tool similar to the tool 72, shown in FIG. 2, may be inserted. When it is desired to store the piece, the tool 72 has its lock end 70 inserted through the aperture 106 to engage the mating depression in the head of the screw 102. This is turned to advance the screw axially to bring its conical nose across the path of the shoulder 96, thereby locking the piece against cocking, loading or firing.

FIGS 6, 7 and 8 show the invention as applied to a bolt action rifle and is equally applicable to the many bolt action shotguns available on the market. The gun has a stock 110 to which is secured an action, generally designated 112, the action being under the control of a conventional bolt handle 114 which is shown in FIGS. 6 and 7 in its closed or firing position. Such guns are equipped with a conventional field safety 116 and the action is operated by lifting the handle 114 from the position shown to a position in which the handle 114 extends horizontally and outwardly of the action 112. In this position, the bolt may be withdrawn, such withdrawal cocking the hammer 124, extracting and ejecting the spent shell and on its forward stroke bringing a new cartridge into the firing chamber, leaving the gun loaded, cocked and ready to fire.

The handle 114 operates in a groove 118 formed in a sleeve 120 forming a part of the whole bolt. As the handle 114 is lifted from the position of FIGS. 6 and 7, it encounters a helical portion 122 of the groove 118 which brings about a rearward cocking motion of the hammer portion 124 of the action 112. When the handle 114 has been lifted as far as it will go, it is then drawn rearwardly to extract the empty shell and then thrust forwardly to put a new shell in the breech and to close the breech, after which the mechanism is locked by return of the handle 114 to the position of FIGS. 6 and 7.

All of the foregoing represents strictly conventional structure and action. It will be noted, particularly in FIG. 6, that the action 112 includes a rearwardly extending upper arm 126

and a rearwardly extending lower arm 128. The lower arm 128 includes a conventional trigger guard 130 which protects a conventional trigger 132. As best seen in FIG. 6, a bore 134 is formed in the arm 128 and is met by a counterbore 136. An axially aligned opening 138 is drilled and tapped in the arm 126.

A sleeve 140 (see also FIG. 8) has a head 142 which is seated in the counterbore 136 of the arm 128 and at its opposite end has a threaded portion 144 which enters and engages the threads of the bore 138 in the upper arm 126. A relatively narrow bore 148 is formed in the threaded end 144 and extends inwardly of the threaded portion where it encounters a bore of larger diameter 150. A compression spring 152 is received in the bore 150 and bears against a shoulder 154 formed where the bore 150 meets the bore 148. A locking member is generally designated 158 in FIG. 8 and has a cylindrical stem 160 which slidably penetrates the spring 152 and the bore 148. The member 158 also has a threaded end 162 which engages the threads formed on the interior of the bore 150 of the member 140.

The member 162 has formed in its free end a depression, not shown but preferably similar to the depression 68 in the head of member 66, shown in FIG. 3, and is operable by means of a key 164 which, at its free end, has projections 166 which enter the depression in the free end of member 162, all as shown in FIG. 6.

This gun is in tamper-proof condition with the parts in the position shown in FIG. 6, where the stem 160 has its free end protruding above the upper surface of the upper arm 126. If, with the parts in this condition, an effort is made to raise lever 114, such lifting thrusts the hammer 124 back or leftward in FIG. 6 to bring a depending portion 168 of the hammer 124 rearwardly into juxtaposition with the protruding portion of the pin 160, thus preventing any further retraction of the bolt 120. The gun, therefore, cannot be opened, loaded or fired while the pin 160 occupies this position.

The spring 152 is provided simply to exert axial pressure between the portion 162 and shoulder 154 of the member 140 to prevent any accidental displacement of the pin 160 due to handling of the gun. Since, in this particular form of the invention, there may be more than usual axial displacement of the pin 160, it may be desirable to use multiple threads on the portion 162 and mating threads in the bore 150 so that each turn of the member 162 will produce a greater axial movement of the pin 160 than would be the case were a single thread used

There is an additional feature of the invention contemplating the use of a safety block, best seen in FIG. 8 and generally designated 170. This is a simple cylindrical member having a bore 172 which will pass the portion 166 of the key 164 and having external threads 174 similar to the threads of portion 162 and which likewise engages the threads in the bore 150. This part is provided with a simple kerf 176. After the member 158 is inserted into the sleeve 140, the member 170 is threaded into the upper end of the bore 150 until it is substantially flush with the outer surface of the head 142. The inner end of the member 170 in that position provides a rearward stop to limit withdrawal of the member 158. Even if the member 170, however, would be fully withdrawn from the bore 150, it is still impractical, without key 164, to back the pin 160 out of the position illustrated in FIG. 6.

It is to be noted that the head 142 is provided with circumferentially spaced depressions 178. These are engaged by a specially formed wrench for the initial installation of the sleeve 140 in the upper and lower arms 126 and 128. The depressions 178 are arranged in an unconventional pattern to prevent unauthorized removal. The tool engaging the depressions 178, however, need only be used by the factory or the gunsmith in the initial assembly of the parts. It is unnecessary for the owner to carry more than the key 164.

FIGS. 9 and 10 show the action portion of a conventional double-barreled shotgun of the twin trigger type. Such guns are of the "break open" type and, being "hammerless", give no external indication whether or not the gun is cocked and/or

PR 0246

[redacted]

ET50424

loaded and, therefore, present a particular danger during periods of storage. In FIG. 9, the gun is shown as having a conventional stock 200 to be mounted on a conventional action generally designated 202. A conventional lever 204 is disposed laterally to permit the barrels 206 to pivot downwardly so as to "break" the action and permit loading. This same movement cocks the internal hammers of both barrels against their respective springs (not shown). Lateral movement of the lever 204 thrusts rearwardly a pin 210. The pin 210 penetrates a spring 208 which, at one end, bears on a lug 212 through which the pin 210 passes. At its opposite end the pin 210 actuates mechanism, not shown, which returns the lever 204 to its normal or control position.

The gun is provided with a thumb-operated safety latch 214 to which is attached a fork member 216 which receives and actuates a head 218 on one arm of a bell crank 220 pivoted in the action frame at 222. Leaf springs 224 have one end wrapped around the pivot pin 222 and the opposite or free ends 226 bear on lugs 228, one of which is formed on each of the triggers 230, which acts to restore the triggers after each trigger has been pulled to discharge the piece. The bell crank 220 has a lower arm 232 which, when the latch 214 is pulled rearwardly or leftwardly in FIG. 9, rocks about the pivot 222 to engage a beveled surface 234 of each of the lugs 228 and therefore immobilizes the triggers 230. In the position of FIGS. 9 and 10, however, the safety is in the "off" position.

The invention of this application is applied in FIGS. 9 and 10 by securing a sleeve 240 in a suitable bore formed in a stationary portion of the action frame. The sleeve 240 has an internally threaded bore 242 which receives a screw 244. The outer end of the screw 244 is formed with a recess similar to that shown at 68 in FIG. 3 and when the screw 244 is advanced to the position in FIGS. 9 and 10, it blocks upward movement of the trigger lugs 228 as well as with the blocking displacement of the safety lever end 232, thus thoroughly immobilizing the piece with the safety latch 214 in "off" position and with arm 217 of fork 216 juxtaposed to the free end of pin 210. As a matter of fact, the piece can not be broken by lateral displacement of the lever 204, since such displacement would thrust rod 210 rearwardly, thereby engaging fork member 216 of the safety slide 214. In ordinary field use, when the gun is broken by movement of the lever 204, rod 210 moves rearwardly and automatically restores the safety 214 from its "off" position to its "safety" position.

The sleeve 240 is welded to a cap 246 with a restricted bore 248 for the reception of a key such as 72 in FIG. 2 or 164 in FIG. 6. In the particular construction shown, it is necessary to form an access opening 250 in the conventional trigger guard 252 in order to provide access for the previously mentioned key.

FIGS. 11 and 12 show the application of the present invention one of the most dangerous forms of firearms to be encountered in any household. This is the hammerless automatic pistol with the magazine contained in the hand grip. Such a firearm gives absolutely no external indication whether it is either loaded, cocked, or both and a particularly dangerous feature is that, in most models, the magazine can be dropped by pressing a single external button or lever, thereby dropping the magazine. This seems to reassure the inexperienced handler that the gun is unloaded and therefore harmless. This misapprehension accounts for many accidental injuries and deaths since if the magazine drops, the gun may still have a cartridge in the firing chamber and still may be cocked and ready to fire.

In FIG. 11, a hammerless automatic pistol is generally designated 270 and has a conventional jacket or slide 272 slidable on a conventional frame 274. The gun has a conventional butt or hand grip 276 and is fired by a conventional trigger 278. The butt 276 receives the magazine of cartridges and the topmost cartridge is fed into the firing chamber by drawing the jacket 272 rearwardly to the right of FIG. 11, where it is slidable on the frame 274. After its rightward movement, the jacket 272 is released, whereupon it is thrust forward by the recoil spring, not shown, causing a cartridge to be lifted from the magazine in the handle 276 and placed in the chamber of the barrel which underlies the jacket 272. The rearward motion of the jacket 272 ejects a spent shell and cocks the hammer. Accordingly, when the slide 272 has been drawn back and released, the gun is both loaded and cocked.

It will be noted that the jacket 272 in its lower edge is provided with a pair of notches 280 and 282. A safety lever 284 is provided in the frame 274 about a pin 286. The free end of the lever 284 is provided with a knurled thumb knob 288 and with a radially projecting lug 290. If the gun is loaded and cocked, the handler may put the gun in "safe" position by thumbing the knob 288 until the lug 290 enters the rearward notch 282.

The pivot pin 286 in a gun of this class usually extends across the frame 274 and carries mechanism, not shown because conventional which, when in the "safety" position of FIG. 11, prevents pulling the trigger 278 so that the cartridge presumably contained in the firing chamber will not be discharged.

The present invention is applied to the guns of the type shown in FIGS. 11 and 12 by forming an axially threaded bore 292 in the thumb knob 288. A member 294 is threaded into the bore 292 and carries a cylindrical pin 296. The opposite end of the member 294 contains a depression 298 similar to the depression 68, seen in FIG. 3, which is engaged by the ribbed end 300 of a key 302. A disc 304 is welded to the knob 288 and has a central bore 306 of a diameter sufficient to pass the ribbed end 300 of the key 302, and to prevent accidental complete withdrawal of the member 292. In the position shown in FIGS. 11 and 12, the member 294 is screwed forwardly and the pin 296 engages a mating recess formed in the frame 274. This immobilizes not only the slide 272 but the trigger 278, as previously noted.

It will be evident from the foregoing disclosure that the mechanical elements of the improved tamper-proof storage lock are substantially the same for a wide variety of guns, the changes chiefly being of size and proportion. The inventive concept is fundamentally the same despite variations of make and model. It is to be expected that anyone skilled in the art, perusing the foregoing description, will discern numerous possible variations in detail from the several forms shown. It is not intended, therefore, to limit this invention to the precise mechanical details hereinabove set forth.

What is claimed is:

1. A tamper-proof lock for small arms of the type having an action which, upon actuation, ejects a spent shell, cocks a hammer and conditions the piece for firing, said action having relatively stationary frame portions supporting movable parts of the action, the improvement comprising: a lock body portion mounted on at least one of said relatively stationary frame portions, said body portion having an upright bore extending therethrough, a member mounted in said bore for axial movement therethrough, means on said member cooperating with means in said body portion to secure said member in a locking position, a compression spring in said bore in said body portion, said spring bearing at one end on said member and at the other end on said lock body, one end of said member, in one extreme position, engaging a selected movable part of the action substantially to lock the entire action, and in the opposite extreme position unlocking the same; said member having formed at its opposite end a coded formation to engage a specialized, externally applied key for moving said member from locked to unlocked and from unlocked to locked positions.

2. The device of claim 1, in which said body portion has a radially outwardly projecting head at one end and external threads at the other end.

3. The device of claim 1, in which the action-engaging end of said member comprises a pin of less diameter than the remainder of said member.

4. The device of claim 1, including internal means in said body portion for blocking full passage of said member through said body portion.

PR 0247

ET50425

5. The device of claim 1, including means adjacent one end of said body portion for blocking withdrawal of said member from said body portion.

6. The device of claim 1, wherein the means on said member cooperates with the means on said body portion for securing said member in closed position includes internal threads in the upright bore and cooperating external threads on said member to permit said member to be threaded into said bore.

o o o o o

PR 0248

ET50426

5

PR 0249

ET50427

United States Patent [19]

Bielfeldt et al.

[11] **3,782,022**

[45] **Jan. 1, 1974**

[54] **RELEASABLE LOCK FOR A BOLT OF A FIREARM**

[75] Inventors: Heinz Bielfeldt; Manfred Birkenhagen, both of Eckernforde, Germany

[73] Assignee: Firma J.P. Sauer & Sohn G.m.b.H., Eckernforde, Germany

[22] Filed: Mar. 27, 1972

[21] Appl. No.: 238,428

[30] Foreign Application Priority Data

Sept. 16, 1971 Germany ..... P 21 46 401.7

[52] U.S. Cl. ..... 42/70 R

[51] Int. Cl. F41c 17/08, F41c 17/00

[58] Field of Search ..... 42/70 R

[56] References Cited

UNITED STATES PATENTS

1,037,468	9/1912	Godsal	42/70 R
2,514,981	7/1950	Walker et al.	42/70 R
2,843,960	7/1958	Larsson	42/70 R

FOREIGN PATENTS OR APPLICATIONS

714,807	9/1954	Great Britain	42/70 R

Primary Examiner—Benjamin A. Borchelt
Assistant Examiner—C. T. Jordan
Attorney—James Cockfield

[57] ABSTRACT

A bolt lock assembly is provided for a firearm which has a rotatable bolt and safety actuating means for securing the firearm against firing. The lock assembly is connected to the safety means such that the bolt is secured when the actuating means secures the firearm against firing. A hand-manipulable release element is carried by the bolt handle to release the bolt for turning, independently of operation of the actuating means, such that the bolt may be turned even while the firearm is secured against firing.

10 Claims, 2 Drawing Figures

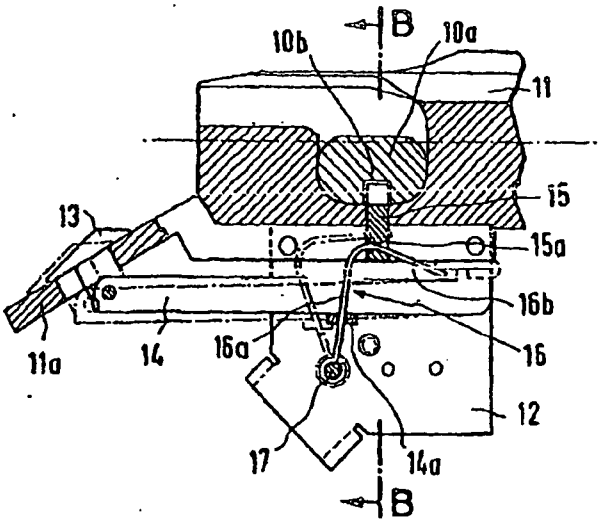

PR 0250

ET50428

Fig. 1

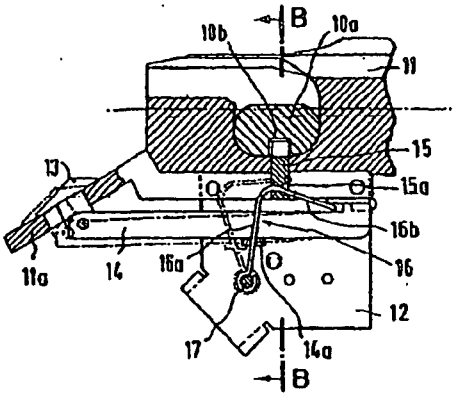

Fig. 2

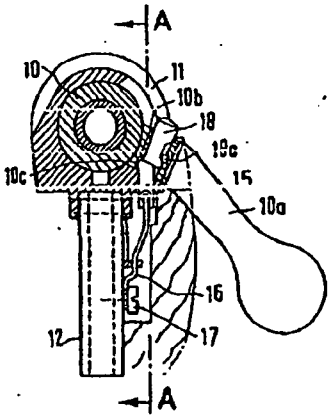

PR 0251

ET50429

RELEASABLE LOCK FOR A BOLT OF A FIREARM

The invention relates to an bolt lock for small arms having a rotating bolt for locking the firing chamber 7. The bolt lock is operable to secure the bolt in a closed position to prevent opening. The bolt lock is coupled with a safety mechanism which prevents actuation of the firing mechanism in order to assure the safe, but immediate readiness of the firearm. That is, when the firearm is set at safe, the firing mechanism is prevented from being actuated to fire the firearm, and the bolt lock functions to prevent the bolt from being opened unintentionally. Such unintentional opening might occur, for example, if the bolt handle is caught by vines or branches, such as in the case of a loaded firearm being used for hunting.

BACKGROUND OF THE INVENTION

Customarily, in the case of known firearms which are provided with an bolt lock for locking the bolt against rotation, the bolt lock is coupled with the safety mechanism in such a way that when the firearm is on "safe," the firing mechanism cannot be actuated and the bolt is locked against opening and can be opened only when the firearm is not set at safe. In other words, the bolt and firing mechanism are both either locked or capable of actuation. As a result, there is a definite uncertainty while handling the firearm, because, upon opening the bolt, a shot can be fired involuntarily.

In order to eliminate this uncertainty, a three position safety device has been devised and used. In the firing position of such device, the firing mechanism and the bolt are freed. In an intermediate first safety position of such device, the firing mechanism is secured without the bolt being locked, and in a second safety position the firing mechanism is secured and the bolt is locked. The safety device is provided with an outside member for manual movement between the respective positions. The operation of such a safety device having an intermediate safety position for the outside-operated safety member is relatively cumbersome. Thus, for opening the bolt, the insertion of the outside safety member into the intermediate position frequently is omitted for reasons of convenience or inattention. In other words, when the bolt is to be unlocked for opening, the safety member is merely immediately transferred to the firing position, thus impairing the safety of the firearm when it is being unloaded.

OBJECTS AND SUMMARY OF THE INVENTION

It is therefore a primary object of the invention to obviate or minimize problems of the type previously described.

An additional primary object of the invention is the provision of an bolt lock wherein opening of the bolt is possible with the firing mechanism being secured and wherein avoidance is afforded of the cumbersome manipulation of a three-position safety device which requires the operator to reach back to the safety arrangement with his hand prior to opening the bolt.

A further object of the invention is the provision of a safety arrangement in which the bolt may be quickly and easily unlocked at the bolt handle.

BRIEF SUMMARY

In order to achieve the above objects, an unlocking element is provided which is operable independently of

a safety mechanism. The unlocking element is operable to move a locking element out of a stop notch of a firearm bolt while the safety mechanism for the firearm firing mechanism is in its safety position.

Basically, the locking element consists of a lock pin which can be shifted vertically or approximately vertically within a bore of a rifle casing. In its locking position, the lock pin engages a recess of a bolt handle. The lock pin can be forced into its unlocking position by the unlocking element preferably in the form of a pressure bolt, or button, which is guided in the bolt handle. This is advantageous in that the pressure button which forces the lock pin into the unlocking position is within reach of the operator's hand grasping the bolt handle and can be operated easily by the thumb of the right hand.

According to another particular aspect of the invention, the lock pin is coupled with inside members of the safety mechanism by way of a resiliently flexible control lever.

In a further facet of the invention, in the case of small arms having a safety device which includes a safety slide and a safety bar connected with it, a control lever of the lock pin comprises a lever articulatedly mounted to the housing of the trigger mechanism and jutting through an eye of the safety bar. In such case, the control lever consists of spring wire, which has two legs running approximately at right angles to each other. The outside leg jutts through a cross bore of the lock pin, which bore is preferably widened from its center toward its ends.

THE DRAWING

In the drawing, a preferred embodiment of the invention has been represented by way of example in which:

FIG. 1 shows a longitudinal sectional view through the rear part of a repeating rifle taken along the line A—A of FIG. 2, wherein the safety elements are shown in the firing position by solid lines, and in the safety position by dash-dot lines; and

FIG. 2 shows a cross-sectional view taken along the line B—B of FIG. 1 with the lock element in its locking position.

DETAILED DESCRIPTION OF A PREFERRED EMBODIMENT OF THE INVENTION

A cylindrical bolt 10 of a gun is guided within a casing 11 of the gun, which casing is connected with the barrel of the gun. The bolt 10 includes an attached handle 10a, by which handle the bolt can be turned and shifted axially. Below the casing 11 of the gun, is provided a trigger housing 12 of a conventional triggering device not shown. In a rear extension 11a of the casing 11, a safety slide 13 is shiftably guided and is connected to a safety bar 14 that extends along the outside of the housing 12. The safety bar 14 is not connected to a separate safety mechanism, but locks the firing mechanism directly by means of its forward bent portion which projects into the trigger housing (shown as a broken line). The safety principal is nevertheless the same as in U.S. Pat. No. 2,514,981 as in both cases the trigger is blocked.

In a bore of the gun casing 11 there is provided a bolt lock assembly including a lock element in the form of a lock pin 15 guided for vertical or approximately vertical shifting movement to lock the bolt against rotation. The lock pin 15, in an upper position, projects into en-

PR 0252

ET50430

gagement with a recess, or stop notch, 10b of the bolt handle 10a, to obstruct rotation of a shoulder portion 10c of the notch 10b, and thereby locks the bolt 10 against turning.

When the lock pin 15 is in a lower position, in which it has emerged from the recess 10b of the bolt handle 10a, the bolt 10 can be turned and opened.

The lock pin 15 is provided at its lower end with a cross-bore 15a through which a resiliently flexible control lever 16 passes. The control lever 16 is rotatably attached to the housing 12 of the triggering mechanism by means of a screw 17. The control lever 16 has two legs 16a and 16b which preferably extend at approximately a right angle to each other, i.e., in the form of an L.

The outside leg 16b passes through the bore 15a of the lock pin 15. The bore 15a of the lock pin 15 extends from the middle of the lock pin 15 to the two ends thereof in a rounded out, or conical configuration in order to prevent the leg 16b of the control lever from being jammed inside the bore as the control lever pivots.

The control lever 16 is operated by means of the safety actuator, or safety bar, 14, which bar 14 has secured thereto an apertured flange, or eye, 14a through which the leg 16a of the control lever 16 passes.

Positioned above the lock pin 15, within an extension of the recess 10b, is a releasing or unlocking element in the preferred form of a pressure bolt, or button, 18. By pressing on the button 18, the lock pin 15 can be forced downwardly into its unlocking position against the bias of the control lever 16, with the resiliently flexible control lever 16 being bent correspondingly. As a result, the bolt 10 can be turned.

The pressure button 18 is prevented from dropping out of its mounting by means of a peg 18a positioned within a recess of the bolt extension, and extending into a groove of the button 18, as is shown in FIG. 2.

The safety bar 14, in its forward unlocking position, releases the firing mechanism safety for firing and orients the control lever 16 such that the control lever maintains the lock pin 15 in a downward position wherein the bolt handle 10a may be turned.

In the rearward position of the safety bar 14, shown in dash-dot lines in FIG. 1, the firing mechanism is secured against firing, and the control lever 16 is positioned such as to maintain the lock pin 15 in its upper position to prevent turning of the bolt handle 10a.

The bolt handle 10a is preferably provided with a shoulder portion forming the notch 10b, shown at the left of the notch in FIG. 2. This portion serves to cam the lock pin 15 downwardly when the bolt handle is being closed, until the lock pin is aligned with the notch.

OPERATION

The method of operation of the device is as follows: To unlock both the firing mechanism and the bolt, the safety slide 13 is slid to its forward position. This moves the safety bar 14 to its forward position and causes the firing mechanism safety to be released and the control lever 16 to be pivoted forwardly. Consequently, the lock pin 15 is pulled to its downward position in which it does not project into the recess 10b of the bolt handle 10a. In this position, the firing mechanism may be actuated and the bolt may be turned.

When the safety slide 13 is pushed rearwardly into its safety position when the bolt 10 is in its closed position, shown in FIG. 1, then the control lever 16 is caused to be swung backwards by means of the safety bar 14. Consequently, the firing mechanism safety is actuated and the control lever 16 forces the lock pin 15 into its upper position in which it projects into the recess 10b of the bolt handle 10a to thus lock the bolt 10 against turning.

According to the invention, the bolt 10 may be opened even when the safety slide is in its rearward position locking the firing mechanism. Accordingly, the pressure button 18 is pressed down, conveniently and easily by the thumb of the right hand grasping the bolt handle 10a. The button 18 engages the lock pin 15 and forces it out of the recess 10b of the bolt 10 against the spring counter-pressure of the leg 16b of the control lever 16. After the bolt handle 10a is rotated, the lock pin 15 is moved up by the control lever spring action.

When the bolt 10 is turned for closing, the lock pin 15 will be cammed downwardly by the shoulder 10c of the bolt handle 10a. When the recess 10b becomes aligned with the lock pin 15, the lock pin will project into the recess 10b of the bolt handle 10a due to the upward force exerted by the spring leg 16b of the control lever 16. Thus, the bolt 10 will be locked so that it cannot be opened unintentionally.

Although the invention is preferably used in connection with small arms with a rotating bolt lock, it is not limited thereto. It also can be used, with appropriate modifications, with small arms having a straight pull lock.

MAJOR ADVANTAGES AND SCOPE OF THE INVENTION

The present invention affords a convenient apparatus for affording quick release of a bolt lock in a firearm.

By means of the instant invention a slidable safety bar is movable to either a firing position releasing both the firing mechanism and the bolt, or a safety position securing both the firing mechanism and the bolt, wherein however, the bolt alone may be unlocked without moving the slidable safety bar.

The pressure button of the instant invention permits a simple release of the bolt lock by means of the thumb of the right hand grasping the bolt handle.

Further convenience is provided by the design of the bolt handle and the use of a spring-like control lever, through which it is required only that the lock pin be pushed down by the pressure button, with remaining movement of the lock pin being caused by normal handling of the bolt handle.

The elements of the instant invention are easily adaptable for use in a firearm having a straight pull lock with only simple modifications being necessary.

Although the invention has been described in connection with a preferred embodiment thereof, it will be appreciated by those skilled in the art that additions, modifications, substitutions and deletions not specifically described may be made without departing from the spirit and scope of the invention as defined in the appended claims.

What is claimed is:

1. In a firearm having a housing, a firing mechanism including a triggering mechanism, a rotatable bolt, safety actuating means being movable to a safety position for securing the firearm firing mechanism against

PR 0253

ET50431

firing operation, and a bolt locking assembly including a locking element and an unlocking element, the improvement wherein:

said locking element is operably connected to said actuating means for selective movement:

into engagement with a recess in said bolt to lock said bolt against turning when said actuating means is in the safety position, and

out of engagement with said recess to permit turning of said bolt when said actuating means is out of the safety position;

said unlocking element being operable independently of said actuating means for moving said locking element out of engagement with said recess when said actuating means is in the safety position.

2. In a firearm according to claim 1, the improvement wherein:

said locking element includes a generally vertically shiftable lock pin mounted in a bore of the firearm housing;

said recess being provided in a handle portion of said bolt;

said lock pin projecting into said recess when said actuating means is in the safety position;

said unlocking element including a pressure button being slidably guided in said handle portion and being engagable with said lock pin forcing said lock pin out of engagement with said recess.

3. In a firearm according to claim 2, the improvement wherein:

a resilient control lever is operably interconnected between said lock pin and said safety mechanism.

4. In a firearm according to claim 3, the improvement wherein:

said safety actuating means includes:

a safety slide, and

a safety bar connected to said safety slide and including an apertured part;

said control lever comprising:

a spring wire member including a pair of generally perpendicularly extending first and second leg portions;

one of said leg portions extending through the apertured part of said safety bar and being pivotally connected to a housing portion of the firearm trigger mechanism;

the other of said leg portions extending through a cross bore in said lock pin;

said cross bore being widened from its center to its respective ends.

5. A lock assembly for a firearm having a rotatable bolt comprising:

hand-manipulable actuating means;

a locking element operatively connected to said actuating means for movement between:

a first position wherein said lock element secures said bolt against rotation, and

a second position wherein said lock element releases said bolt for rotation; and

hand-manipulable element-releasing means operable independently of said hand-manipulable actuating means for moving said lock element to its second position wherein said bolt is released for turning.

6. A bolt lock assembly according to claim 5 wherein:

said lock assembly includes a spring means for yieldably biasing said locking element into a recess in said bolt when said locking element is in its first position; and

said element releasing means comprising a button movably mounted in an apertured portion of said bolt and being movable against said lock element to shift said lock element to its second position.

7. A bolt lock assembly according to claim 6 wherein said spring means comprises:

a spring wire member including a pair of generally perpendicularly extending first and second leg portions;

one of said leg portions being connected to said actuating means for movement therewith and being pivotally connected to a housing portion of the firearm;

the other of said leg portions extending through a cross bore in said lock pin;

said cross bore being widened from its center to its respective ends.

8. A bolt lock assembly according to claim 7 wherein:

said locking element is slidably mounted in a bore carried by a housing portion of said firearm;

said locking element, in its first position, being engageable with a recess in a handle portion of said bolt; and

said button being slidably mounted in an apertured portion of said bolt portion.

9. In a firearm having a firing mechanism, a movable bolt, safety actuating means being movable to a safety position for securing the firearm firing mechanism against firing operation, and a bolt locking assembly including a locking means and an unlocking means, the improvement wherein:

said locking means is operably connected to said actuating means for selective movement:

to a first position to lock said bolt against movement when said actuating means is in the safety position; and

to a second position to permit movement of said bolt when said actuating means is out of the safety position;

said unlocking means being operable independently of said actuating means for moving said locking means to its second position when said actuating means is in the safety position.

10. In a firearm having a rotatable bolt, safety actuating means being movable to a safety position for securing the firearm firing mechanism against firing operation, and a bolt lock assembly including a locking element and an unlocking element, the improvement wherein:

said actuating means includes a hand-manipulable safety bar;

said locking element including:

a generally vertically slidable lock pin mounted in a bore of the firearm housing;

a control lever having a pair of relatively angularly extending legs;

one of said legs being mounted for pivotal movement and being operatively connected to said safety bar for movement therewith;

the other leg portion of said control lever being operatively connected to said lock pin such that movement of said safety bar to the safety position causes said lock pin to be shifted into locking engagement with a recess in said bolt, and movement of said safety bar out of its safety position

PR 0254

ET50432

causing said lock pin to be shifted out of locking engagement with said recess;

said unlocking element including:

a hand manipulable pressure member slidably mounted on a handle part of said bolt adjacent said lock pin such that movement of said pressure member against said lock pin causes said lock pin to be shifted out of engagement with said recess while said actuating member is in its safety position.

* * * * *

PR 0255

ET50433

PR 0256

ET50434

United States Patent [19]

Ruger et al.

[11] **Patent Number: 4,569,145**

[45] **Date of Patent: Feb. 11, 1986**

[54] **INACTIVATING SELECTOR ARRANGEMENT FOR BOLT ACTION FIREARMS**

[75] Inventors: William B. Ruger, Croydon, N.H.; Roy L. Melcher, Stratford, Conn.

[73] Assignee: Sturm, Ruger & Company, Inc., South Port, Conn.

[21] Appl. No.: 691,788

[22] Filed: Jan. 16, 1985

Related U.S. Application Data

[63] Continuation of Ser. No. 555,969, Nov. 29, 1983, abandoned, which is a continuation-in-part of Ser. No. 490,502, May 2, 1983, abandoned.

[51] Int. Cl.[4] F41C 11/06; F41C 17/02; F41C 17/04

[52] U.S. Cl. ..... 42/16; 42/70 R; 42/70 E; 42/70 F

[58] Field of Search ..... 42/16, 70 R, 70 C, 70 D, 42/70 E, 70 F

[56] **References Cited**

U.S. PATENT DOCUMENTS

1,318,423	10/1919	Williams	42/16
1,322,514	11/1919	Bader	42/16
2,607,148	8/1952	Simpson	42/70 E
2,824,402	2/1958	Fischer	42/16
2,869,269	1/1959	Couture	42/70 E
4,445,292	5/1984	Martin	42/70 R

Primary Examiner—Charles T. Jordan
Assistant Examiner—Ted L. Parr
Attorney, Agent, or Firm—Pennie & Edmonds

[57] **ABSTRACT**

An inactivating selector arrangement for a bolt action firearm for inactivating the sear and trigger and for inactivating the bolt. The multiposition selector is rotatable to a first position to restrain the sear-trigger; to a second position to restrain both sear-trigger and bolt and to a third position in which neither sear-trigger nor bolt is restrained.

7 Claims, 18 Drawing Figures

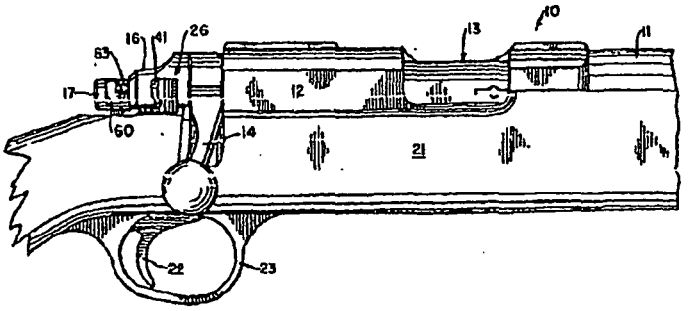

PR 0257

ET50435

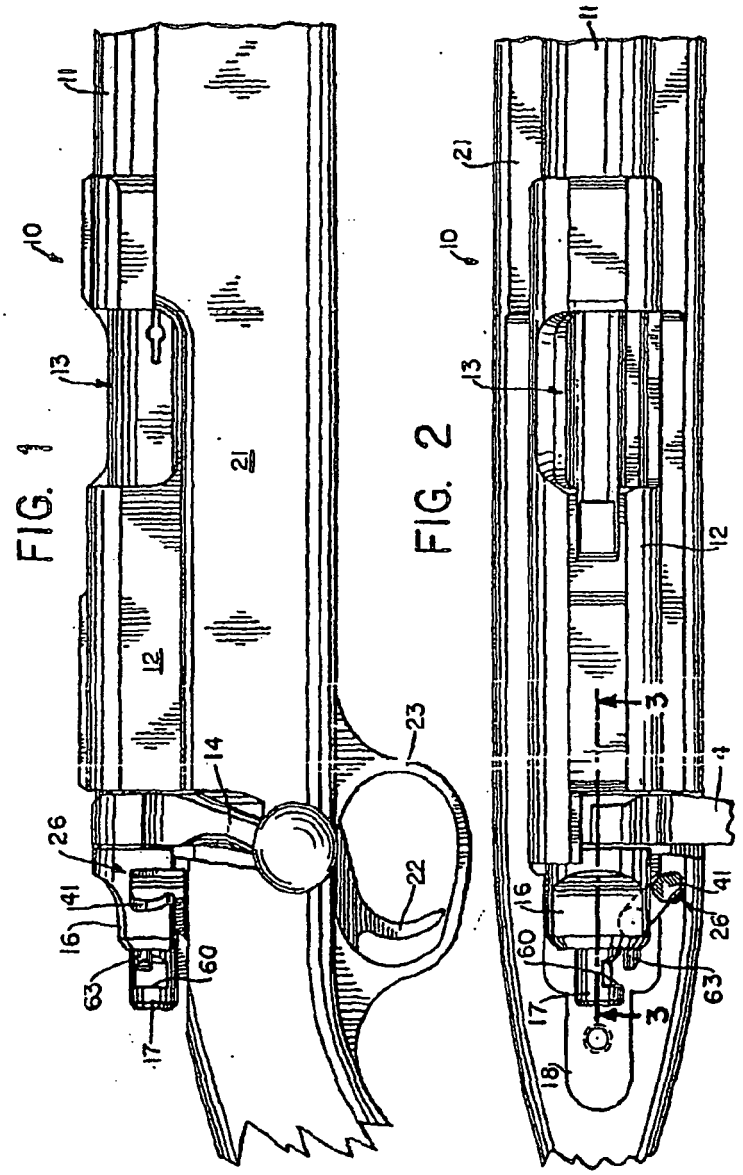

PR 0258

ET50436

FIG. 3

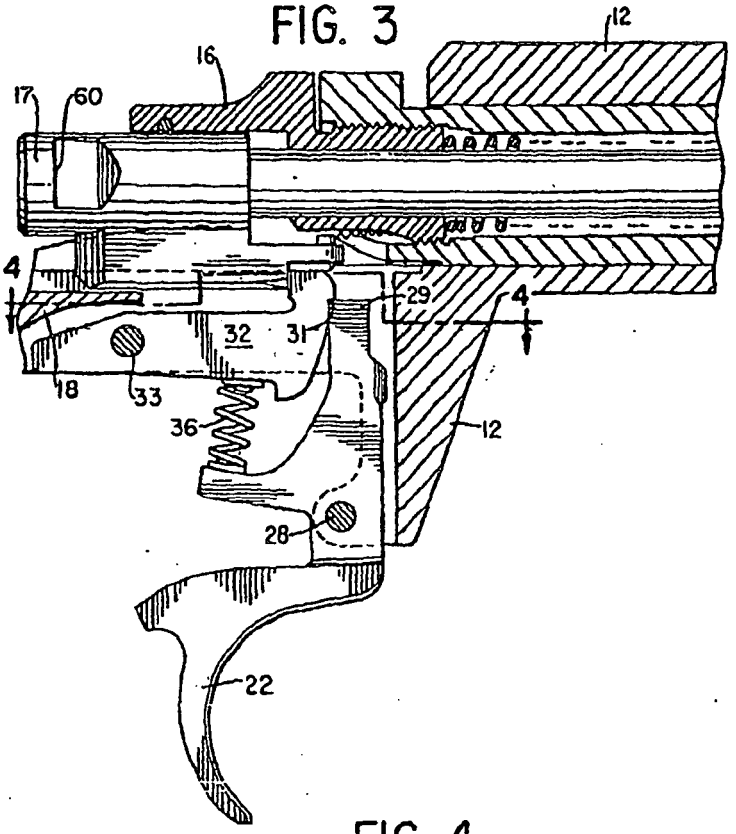

FIG. 4

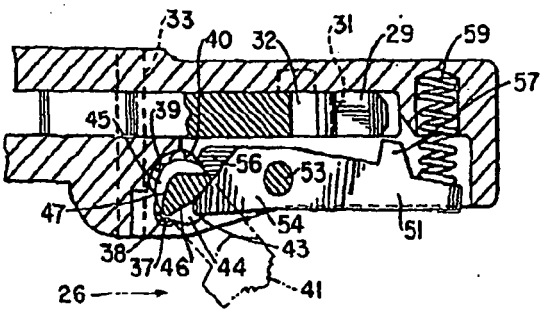

PR 0259

ET50437

FIG. 5

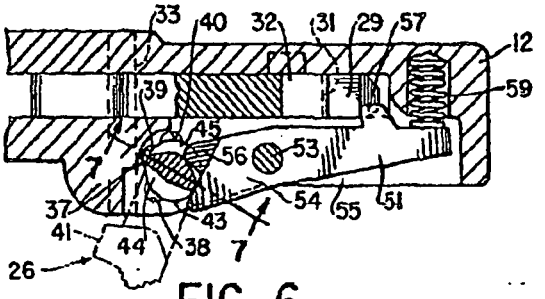

FIG. 6

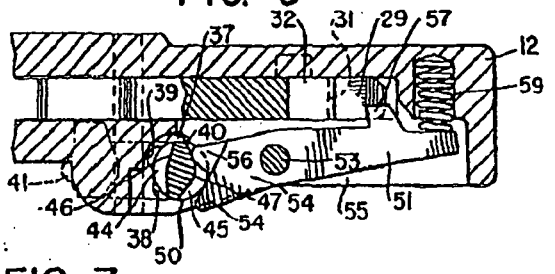

FIG. 7

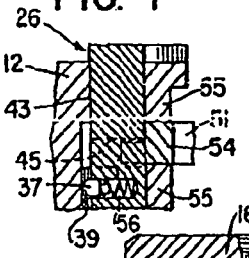

FIG. 8

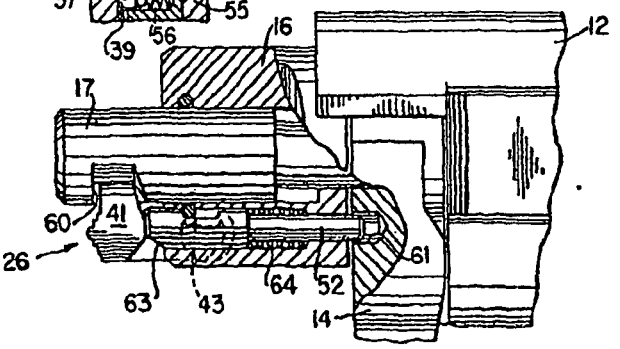

PR 0260

ET50438

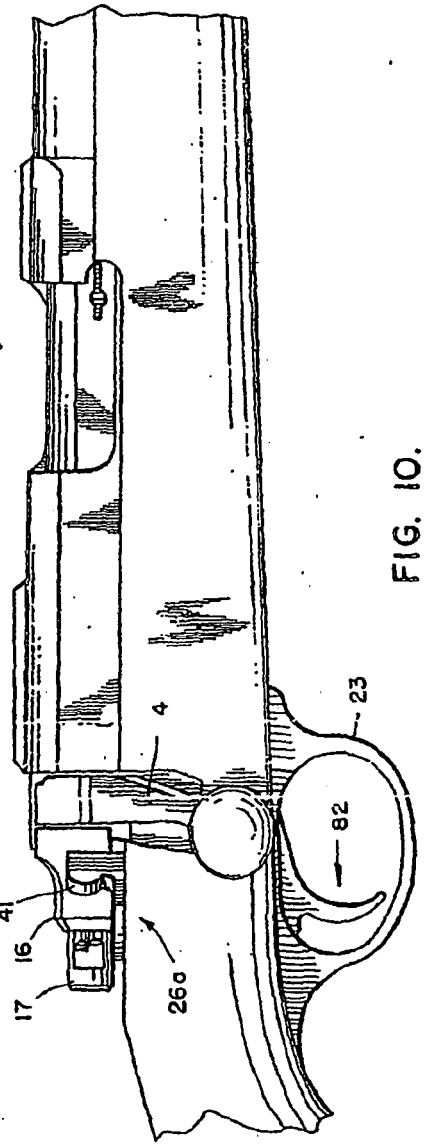

FIG. 9.

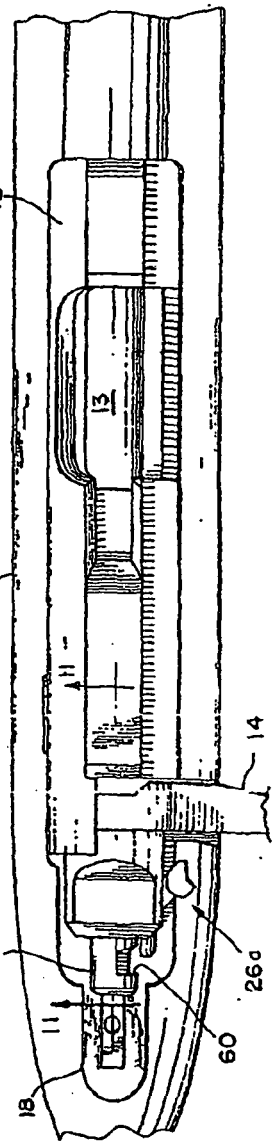

FIG. 10.

PR 0261

ET50439

FIG. 11.

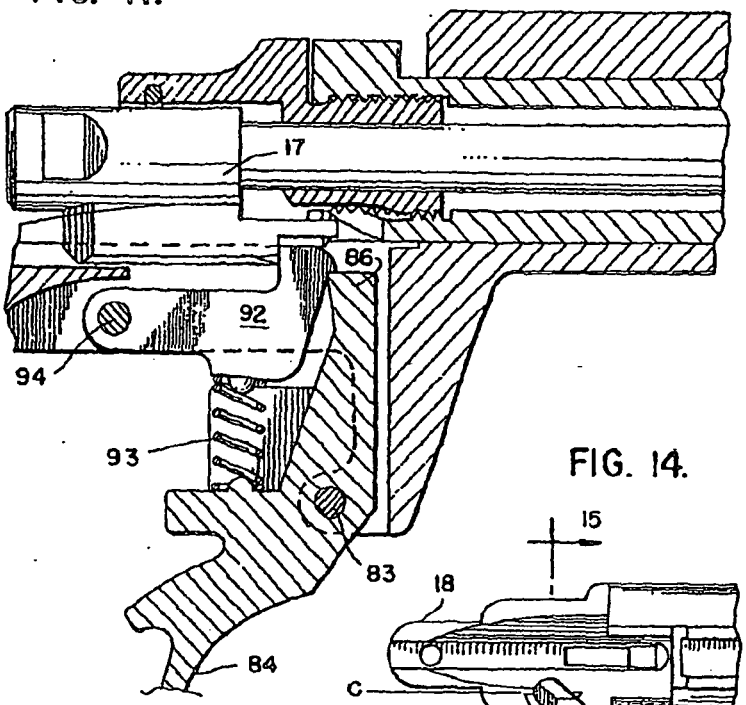

FIG. 14.

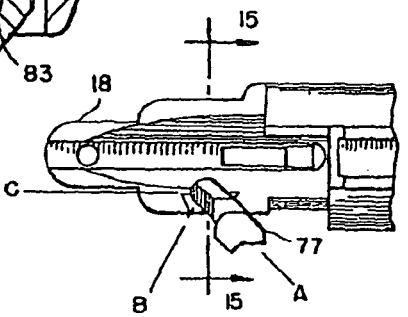

FIG. 12.

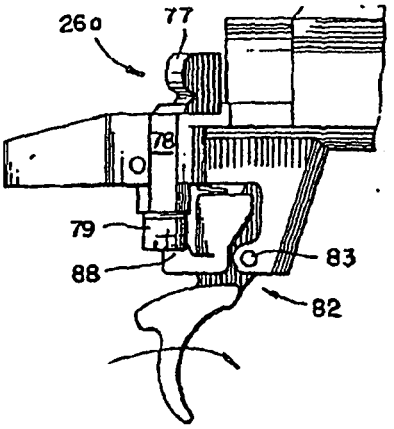

FIG. 13.

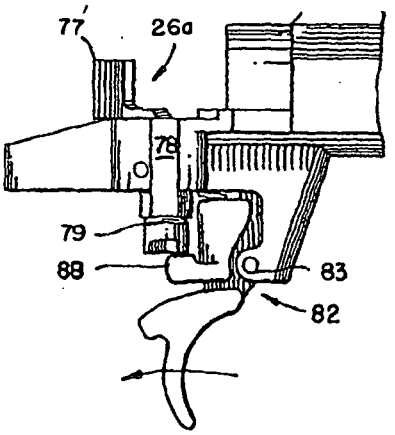

PR 0262

ET50440

FIG. 15.

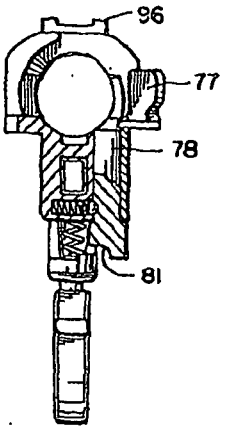

FIG. 16.

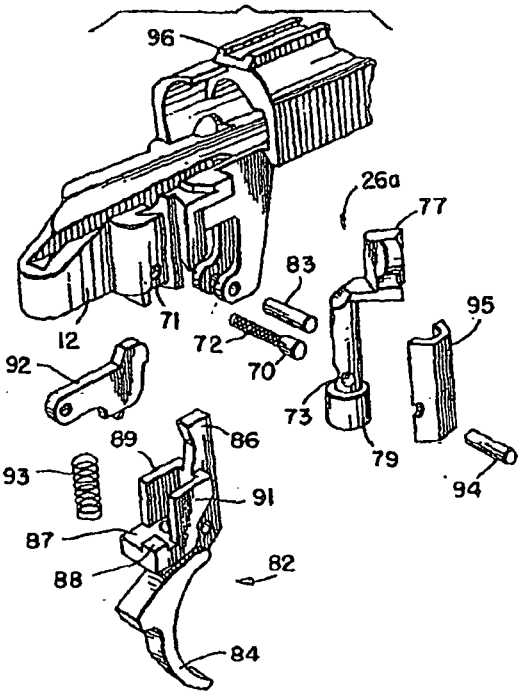

FIG. 17.

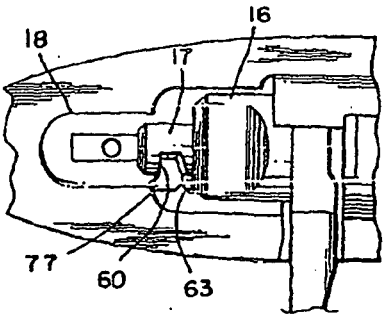

FIG. 18.

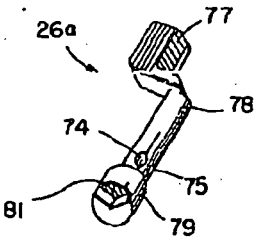

PR 0263

ET50441

INACTIVATING SELECTOR ARRANGEMENT FOR BOLT ACTION FIREARMS

RELATIONSHIP WITH PRIOR APPLICATION

This is a continuation of application Ser. No. 555,969 filed Nov. 29, 1983, now abandoned, which is a continuation-in-part of U.S. application Ser. No. 490,502, entitled "Inactivating Selector Arrangement For Bolt Action Firearms" filed May 2, 1983, now abandoned.

BACKGROUND OF THE INVENTION

1. Field of the Invention

This invention relates to bolt action rifles, and in particular to an inactivating selector arrangement for selectively restraining movement of the sear, trigger or cocking piece or all three.

2. Prior Art

The major components of a conventional bolt action firearm comprise the barrel, a receiver secured to the rear of the barrel, a cylindrical breech bolt mounted in the receiver in axial alignment with the barrel, a firing mechanism including the trigger mounted on the receiver below the bolt, and the stock. The cylindrical breech bolt is rotatable about its longitudinal axis from its locked firing position to its unlocked extracting and loading position, the bolt being longitudinally slidable within the receiver when it is in its unlocked position.

When the bolt is rotated from its locked to its unlocked position and then is moved rearwardly, the spent cartridge is extracted from the chamber of the barrel and is ejected. When the bolt is moved forwardly from its rearwardmost position a fresh cartridge is inserted into the chamber of the barrel. When the bolt reaches its forewardmost position it is rotated about its longitudinal axis to lock the bolt and cock the firing mechanism.

Associated with the breech bolt is a spring powered cocking piece which is held by a sear in the ready-to-fire position. Operation of the trigger moves the sear to release the cocking piece.

Many arrangements for preventing movement of the cocking piece, the sear or trigger, to in turn, prevent or restrain movement of the cocking piece toward the cartridge have been proposed but none have provided the features and advantages of the present invention.

SUMMARY OF THE INVENTION

Broadly, the present invention comprises a selector arrangement for restraining movement of the trigger or bolt handle or both. The arrangement includes a rotatable selector carrying in fixed relation a selector body portion and a selector handle projection, a trigger and sear blocker associated with the selector body portion, and a bolt handle plunger movable by the selector projection whereby rotatable movement of the selector to first position causes trigger and sear blocker to block movement of the trigger and sear and movement of the selector to a second position causes the selector to continue to hold the trigger and sear in its blocking mode while the selector in addition moves a bolt plunger to restrain movement of the bolt handle. In a third position the selector arrangement is passive.

It is a feature of the inactivating selector arrangement that selector projection is moved to a position in a recess in the cocking piece as the selector is placed in the second position. In this position, the selector projection

will prevent any substantial forward movement of the cocking piece.

DESCRIPTION OF THE DRAWINGS

FIG. 1 is a partial side elevational view of a bolt action rifle including the selector arrangement of the present invention;

FIG. 2 is a partial plan view of such rifle;

FIG. 3 is a sectional view along lines 3—3 of FIG. 2;

FIG. 4 is a sectional view along lines 4—4 of FIG. 3 with selector projection or thumb piece shown in phantom;

FIG. 5 is a view similar to FIG. 4 showing the selector in a position to activate trigger control lever to block the trigger and sear;

FIG. 6 is a view similar to FIG. 4 showing the selector in a position to block the trigger, sear and cocking piece;

FIG. 7 is a sectional view taken along line 7—7 of FIG. 5;

FIG. 8 is a fragmented plan view showing the selector in the position of FIG. 6 and further showing blocking plunger blocking the bolt handle.

FIG. 9 is a partial side elevational view of a bolt action rifle including an alternative selector arrangement of the present invention;

FIG. 10 is a partial plan view of the rifle of FIG. 9;

FIG. 11 is an enlarged sectional view along line 11—11 of FIG. 10;

FIG. 12 is a partial side elevational view of the alternative selector arrangement and trigger unit with the selector arrangement in the fire position;

FIG. 13 is a partial side elevational view of the alternative selector arrangement in a lock position;

FIG. 14 is a partial elevational view showing the alternative selector arm in the forward fire position;

FIG. 15 is a sectional view along line 15—15 of FIG. 14;

FIG. 16 is an exploded view of the receiver, selector unit, trigger, and associated parts of the alternative embodiment;

FIG. 17 is a partial elevational view showing the alternative selector unit in the bolt handle restraining position; and

FIG. 18 is a perspective view of the alternative selector unit.

DESCRIPTION OF THE PREFERRED EMBODIMENT

Referring to FIGS. 1 and 2, rifle 10 includes barrel 11, a receiver 12 secured to the rear of the barrel, a cylindrical breech bolt assembly 13 mounted in receiver 12 to the rear of and in axial alignment with barrel 11, a bolt handle 14 secured to the rearward end of the bolt assembly 13, a bolt head sleeve 16, a cocking piece 17, a receiver tang 18 and a stock 21. Rifle 10 also includes trigger 22, trigger guard 23, and a rotatable inactivating selector unit 26. Unit 26 is mounted in the receiver and rotates about a vertical axis.

Turning to FIG. 3, trigger 22 is pivoted about trigger pivot 28 with upper trigger arm 29 engaged in sear notch 31 of sear 32. Sear 32 is mounted about pivot 33 and spring 36 is interposed between trigger 22 and sear 32. The pulling of trigger 22 to rotate it clockwise about pivot 28 causes trigger arm 29 to move out of sear notch 31 permitting sear 32 to rotate clockwise about pivot 33 thus releasing cocking piece 17. Cocking piece 17 then moves forward under the force of a spring (not shown)

PR 0264

ET50442

to strike the rim of the cartridge (not shown) to fire the rifle.

With reference to FIGS. 4–8, it is seen that selector unit 26 is rotatably mounted to be turned to and held in three discrete positions determined by detent 37 (see FIG. 7) located in one (1) of the three (3) detent recesses 38, 39 and 40 (FIGS. 4–7). Selector unit 26 includes cylindrical body 43 carrying detent 37 in its lower portion (FIG. 7) and two slotted areas 44, 45 in the central part of body 43 define respectively first selector cam surface 46 and second selector cam surface 47. Selector unit 26 also includes a thumb piece 41. Slot area 44 has a thickness greater than cam follower 54 to accommodate follower 54 therein (FIG. 4). Slot area 45 is less thick than slot area 44 so that in the FIG. 6 position cam follower 54 cannot enter slot area 45 but instead rides on cylindrical surface 50 of selector body 43. Turning to FIG. 7, it is seen that cam follower 54 housed between frame elements 55, has a thickness greater than slot area 45.

On the other hand, cam follower 56 with less thickness than follower 54 is accommodated in slot area 45 throughout the rotational operation of selector unit 26.

Trigger control lever 51 is pivotable about pivot 53. On one end lever 51 carries upper cam follower 54 and lower cam follower 56 while on the opposite end trigger blocking finger 57 is located. Lever 51 is urged away from trigger 29 by spring 59.

Turning attention to FIG. 8, it is seen that cocking piece 17 has a blocking notch 60 in it for receiving offset thumb piece 41 when selector unit 26 is rotated to the position shown in FIGS. 6 and 8. In this selector position, blocking plunger 52 is urged by selector 26 into bolt handle recess 61 to block movement of the bolt handle 14. Upon release of plunger 52 by selector 26 spring 64 withdraws plunger 52 freeing handle 14.

Summarizing, selector unit 26 engages and moves trigger control lever 51 to block the trigger and it in turn the sear (see FIGS. 4–6). Unit 26 also serves to restrict movement of cocking piece 17 (see FIGS. 2 and 8) and actuates blocking plunger 52 to block movement of bolt handle 14 (FIG. 8).

In step-by-step operation selector unit 26 is turned through thumb piece 41 to a passive or neutral position causing detent 37 to snap into a detent recess 38 which places cylindrical body 43 with cam surfaces 46 and 47 in such position that finger 57 of lever 51 does not block trigger 29 (see FIG. 4). The firearm can be fired in this selector mode. To restrict trigger movement and in turn sear movement, the selector unit 26 is moved to inactivating position number one where detent 37 is moved into recess 39 causing surface 46 to move cam follower 54 of lever 51 placing lever finger 57 against trigger arm 29 (see FIG. 5). In this position, trigger arm 29 is inactivated by being restrained from rotating clockwise about pivot 28 (as shown in FIG. 3). The trigger 22 cannot rotate and the sear cannot drop to fire the rifle. Alternatively, lever 51 and its finger 57 may be designed to block rotational movement of sear 32.

Finally, selector unit 26 is movable to inactivating position number two during which movement cylindrical surface 50 moves cam follower 54 to retain lever 51 in its trigger-sear-restraining position. As thumb piece 41 is moved to bring selector unit 26 to this third position thumb piece 41 bears against beveled surface 63 causing blocking plunger 52 to move to the right into recess 61 to block rotational movement of handle 14. Spring 64 is compressed during this movement. Upon the selector reaching this third position, thumb piece 41 is in blocking notch 60 of pin striker 17 (cocking piece) to limit forward travel of striker 17 (see FIGS. 6 and 8).

It will be noted that in operation slot area 45, cam surface 47 and cam follower 56 operate to move lever 51 to the passive or neutral position of FIG. 4 while slot area 44, cam surface 46, cylindrical surface 50 and cam follower 54 operate to move lever 51 into its blocking position and hold it there when selector 26 is in positions number one and two as described above.

With reference to the alternative embodiment shown in FIGS. 9–18 and, in particular, with reference first to FIGS. 16 and 18, it is seen that selector unit 26a (like selector 26) is rotatably mounted to be turned to and held in three discrete positions determined by detent 70 mounted in a detent hole 71 in receiver 12. Detent spring 72 urges detent 70 into recesses 73, 74 and 75 in selector unit 26a. Selector unit 26a includes thumb piece 77, cylindrical body portion 78 including configured foot portion 79. Foot portion 79 carries notch 81 providing a configuration for engagement and disengagement with the trigger which will be explained. Trigger 82, pivotable about pivot axis 83, includes finger piece 84, sear-engaging upper trigger arm 86 and trigger extension 87 including extension block 88. Also shown in FIGS. 16 and 18 are trigger side pieces 89, 91; sear 92; sear spring 93; sear pin 94; selector cover plate 95; and rifle sight 96.

Turning to FIGS. 12, 13, and 14, it is seen that when selector unit 26a is in position A (FIGS. 12 and 14), configured foot portion 79 of selector 26a is positioned to accommodate extension block 88 thus permitting clockwise pivoting of trigger 82, the release of sear 92 and firing of the rifle (FIG. 12). As the selector thumb piece 77 is moved back from position A to points where rectangular block 88 is no longer able to be accommodated in notch 81 (such as position B in FIG. 14), a portion of foot portion 79 moves adjacent block 88 (with minimal clearance) to prevent, in these positions, any significant rotation of trigger 82. Trigger 82 cannot in these positions be rotated clockwise to release sear 92 to fire the rifle.

Turning now to FIG. 17, the selector has been moved further rearward to place it in cocking piece notch 60. Movement of selector 26a to position C of FIG. 14 to lock bolt handle 14 is the same as operation of selector 26 described above.

We claim:

1. In a bolt action firearm having a barrel, a receiver, a bolt sleeve, a cocking piece, a bolt handle, a trigger and a sear, the improvement comprising a multi-positional selector-operated arrangement capable of restraining movement of the trigger and associated sear in a first position and restraining movement of trigger, sear and bolt handle in a second position, such arrangement in turn comprising:

(a) trigger and sear blocking means for preventing rotation of the trigger in a direction to release the sear;

(b) a rotatable selector means positioned in the receiver for rotating about a vertical axis which selector means is rotatable to selected positions, such selector means having

(1) a body portion, and

(2) a hand-engageable projection portion;

(c) actuation means for actuating said trigger and sear blocking means when said selector is turned to the first or to the second positions;

PR 0265

ET50443

(d) a notch in the cocking piece;

(e) a recess in the bolt handle; and

(f) a blocking plunger means positioned to be moved into the recess in the bolt handle as the selector means is moved to such second position carrying said hand-engageable projection portion into said notch.

2. The selector arrangement of claim 1 in which the trigger blocking means in turn comprises:

(a) cam means on the selector body portion; and

(b) elongated pivotable trigger and sear restraining means having on one end a cam follower surface which engages said cam means on such body portion and such restraining means having on the other end trigger engaging means

whereby the rotation of the selector means to the two positions actuates the elongated pivotable trigger and sear restraining means to restrain trigger movement in the first position and to allow trigger movement in the second position.

3. The selector arrangement of claim 1 in which the trigger blocking means in turn comprises extension means mounted on the trigger for rotation therewith; and in which the actuation means comprises foot means on the rotatable selector means whereby as the selector means is rotated the extension means and foot means are engaged in said first position to restrain trigger rotation and whereby the selector means is rotated to a third position in which extension means and foot means are not engaged in said third position to permit trigger rotation to release the sear.

4. The arrangement of claim 1 in which the selector means is movable to a third position in which the trigger is blocked and the bolt handle is not blocked.

5. The arrangement of claim 2 in which the selector means is movable to a third position in which the trigger is blocked and the bolt handle is not blocked.

6. The arrangement of claim 3 in which the selector means is movable to a third position in which the trigger is blocked and the bolt handle is not blocked.

7. In a bolt action firearm having a barrel, a receiver, a bolt sleeve and a cocking piece, a bolt handle, a trigger and a sear, the improvement comprising a multi-positional selector-operated arrangement capable of restraining movement of the trigger and associated sear in a first position and restraining movement of trigger, sear and bolt handle in a second position, such arrangement in turn comprising:

(a) trigger and sear blocking means for preventing rotation of the trigger in a direction to release the sear; said blocking means including an extension on the trigger;

(b) a rotatable selector means positioned in the receiver for rotating about a vertical axis which selector means is rotatable to selected positions, such selector means having

(1) a body portion including a configured foot portion and

(2) a hand-engageable projection portion;

(c) actuation means for actuating said trigger and sear blocking means when said selector is turned to the first or to the second position; said actuation means including said foot portion of the selector body means;

(d) a notch in the cocking piece;

(e) a recess in the bolt handle; and

(f) a blocking plunger means positioned to be moved into the recess in the bolt handle as the selector means is moved to such second position and said hand-engageable projection portion is moved into said notch

whereby as the selector means is rotated (1) the configured foot portion engages and disengages from the trigger extension to block and unblock trigger rotation and (2) to engage, hold and release the cocking piece.

* * * * *

PR 0266

ET50444

United States Patent [19]

Nilsson

[11] Patent Number: 4,672,762

[45] Date of Patent: Jun. 16, 1987

[54] SAFETY DEVICE IN A REPEATING RIFLE

[76] Inventor: Carl O. L. Nilsson, Armfeldtsvägen 9, S-670 40 Åmotfors, Sweden

[21] Appl. No.: 728,584

[22] Filed: Apr. 29, 1985

[30] Foreign Application Priority Data

May 14, 1984 [SE] Sweden 8402575
Jan. 7, 1985 [SE] Sweden 8500044

[51] Int. Cl.[4] F41C 17/08

[52] U.S. Cl. 42/70.01; 42/70.11; 42/16

[58] Field of Search ..... 42/16, 1 LP, 70 R, 69 A

[56] References Cited

U.S. PATENT DOCUMENTS

41,115	1/1864	Bean	42/1 LP
1,089,195	3/1914	Falco	42/70 R
1,545,045	7/1925	Dute	42/16
1,568,635	1/1926	Speer	42/16
2,123,111	7/1938	King	42/16
2,824,402	2/1958	Fischer	42/70 R
3,553,877	1/1971	Welch et al.	42/70.11
4,261,127	4/1981	Karkkainen	42/1 LP

FOREIGN PATENT DOCUMENTS

406311	7/1934	Belgium	42/16
365139	3/1906	France	42/16
5483	of 1889	United Kingdom	42/16
18242	of 1913	United Kingdom	42/70 R

Primary Examiner—Deborah L. Kyle
Assistant Examiner—Michael J. Carone
Attorney, Agent, or Firm—Murray and Whisenhunt

[57] ABSTRACT

The invention relates to a device in a repeating rifle with a cylinder bolt mechanism with a receiver and a bolt, comprising a bolt body with a mainspring and a firing pin, a rotatable bolt head, a handle, and in the receiver studs or some corresponding locking means interacting with the bolt head. A lockable lock (15) is arranged in the cylinder mechanism, said lock when in its locking position preventing the bolt head (9) from being turned from its position in engagement with said studs or corresponding locking means (4) in the receiver (2), thereby preventing the gun from being opened, i.e. the bolt (1) from being moved rearwards in the receiver (2).

8 Claims, 21 Drawing Figures

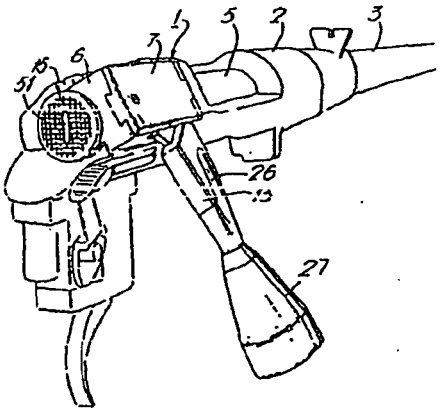

PR 0268

ET50446

Fig. 1.

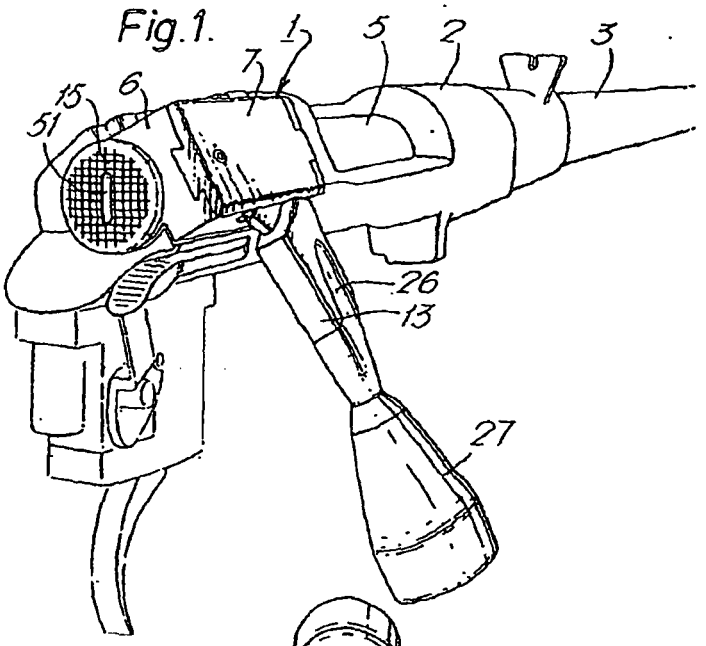

Fig. 2.

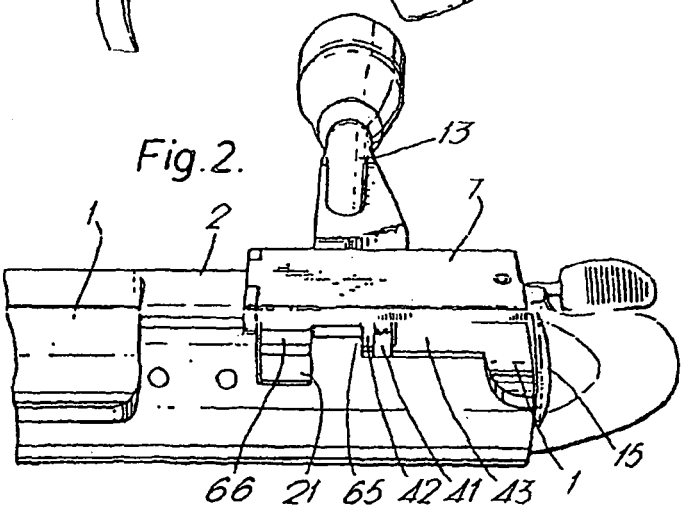

PR 0269

ET50447

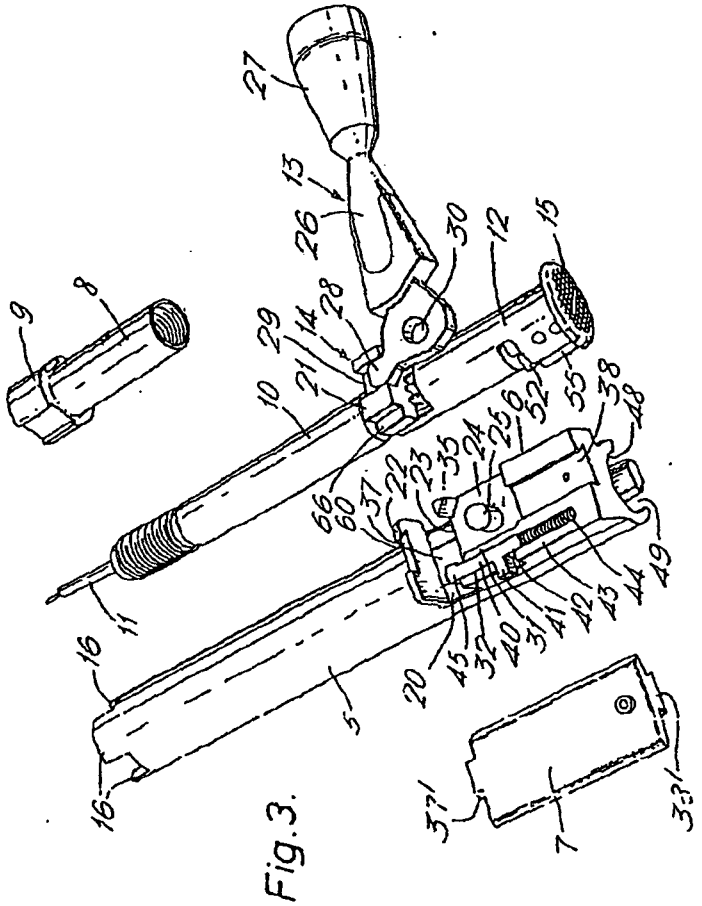

Fig. 3.

PR 0270

ET50448

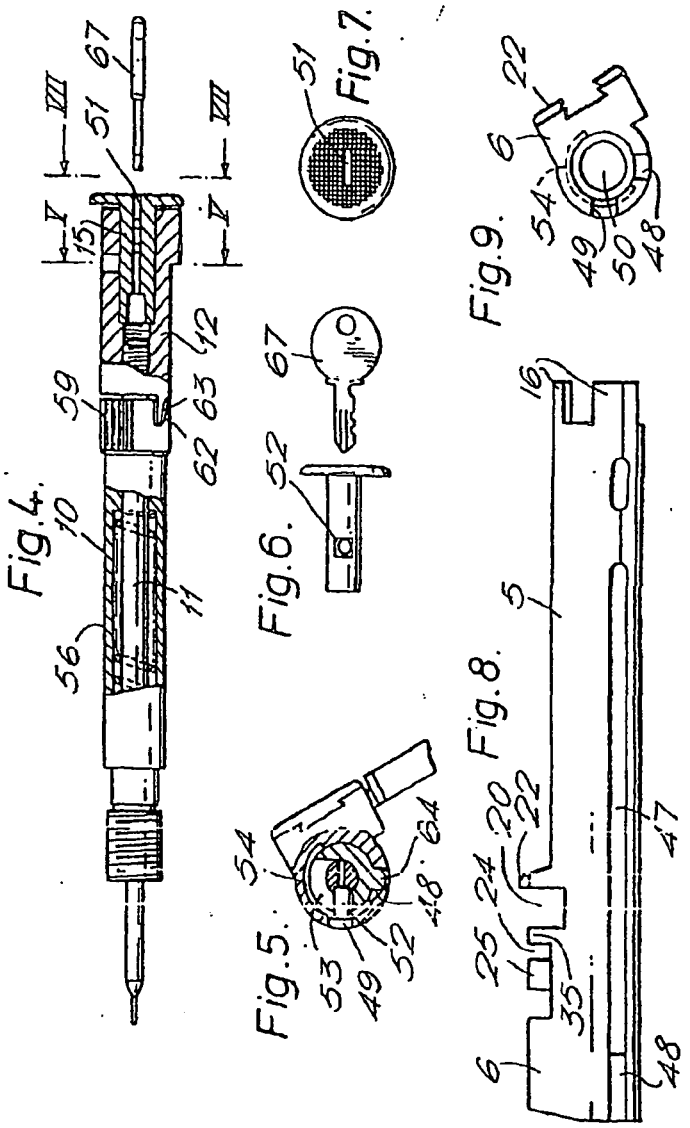

PR 0271

ET50449

Fig.10.

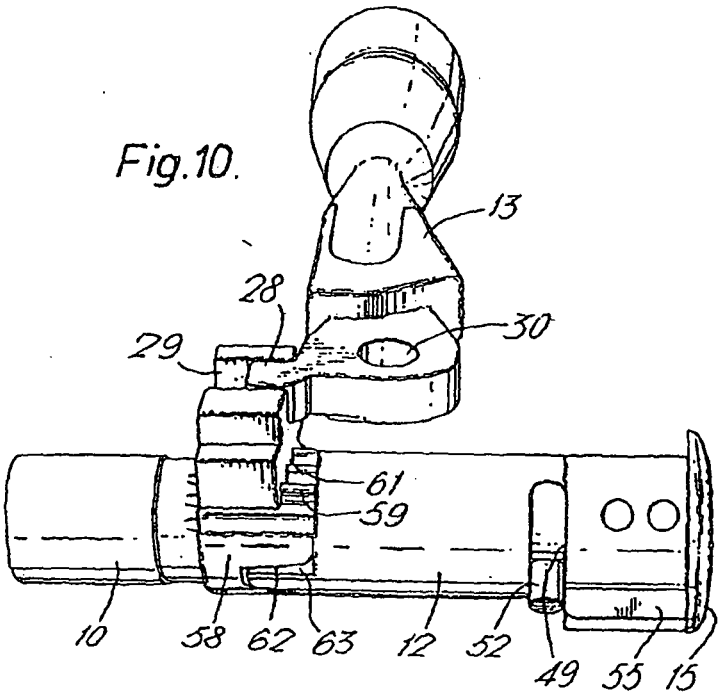

Fig.11.

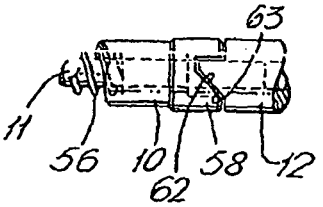

PR 0272

ET50450

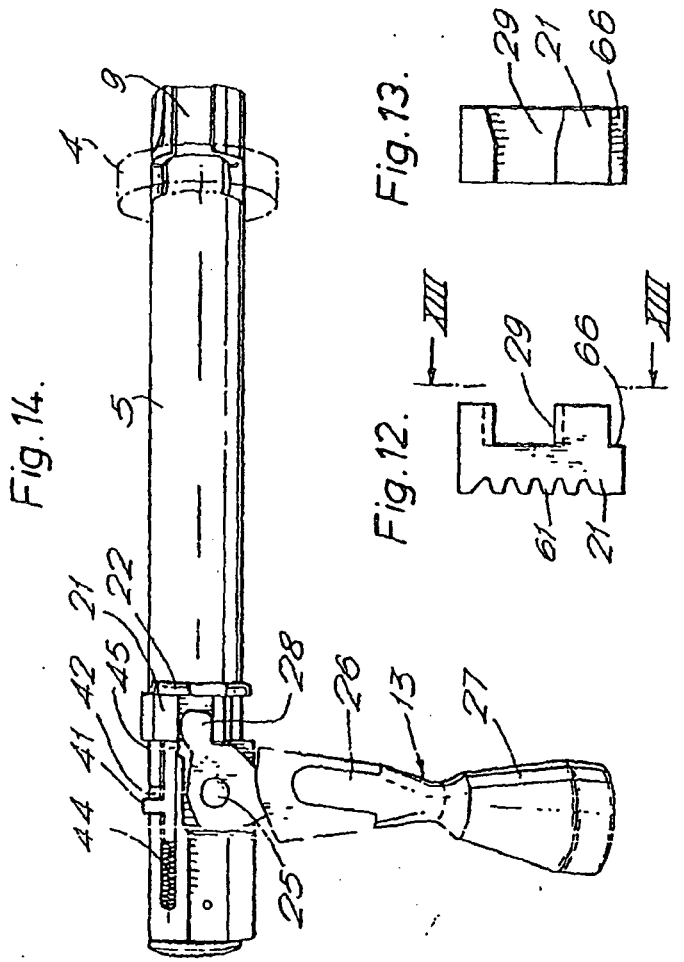

PR 0273

ET50451

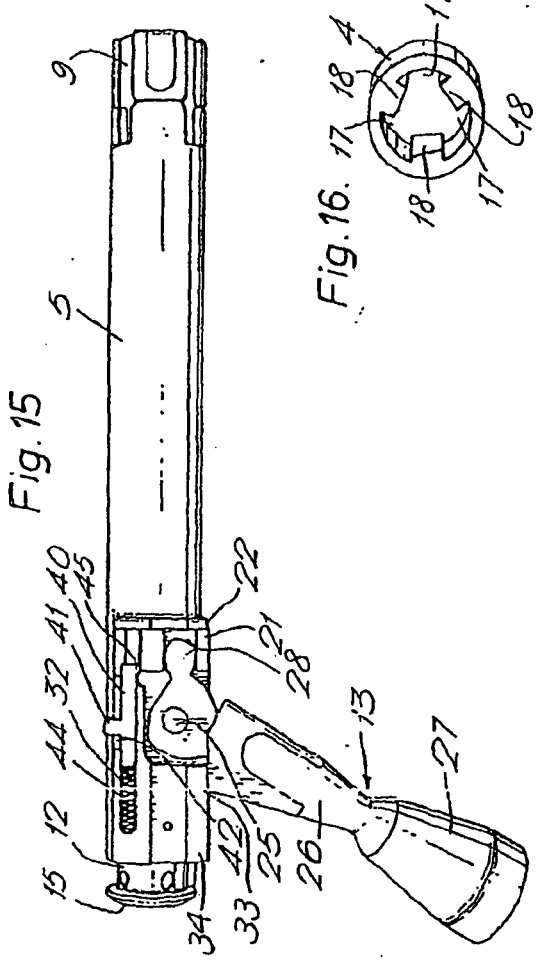

Fig. 15

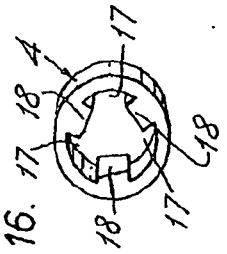

Fig. 16.

PR 0274

ET50452

Fig.17.

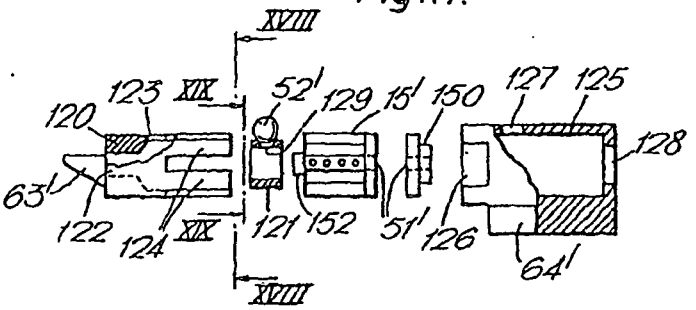

Fig.18.

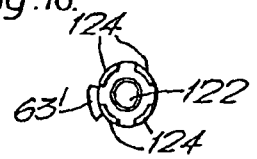

Fig.19.

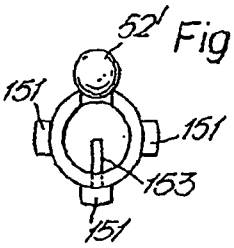

Fig.20.

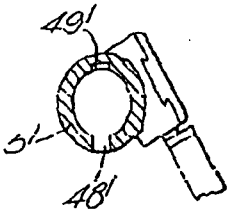

Fig.21.

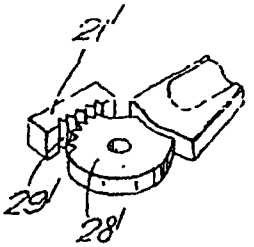

PR 0275

ET50453

SAFETY DEVICE IN A REPEATING RIFLE

TECHNICAL SCOPE

The invention relates to a device in a repeating rifle with a cylinder bolt mechanism with a receiver and a bolt, comprising a bolt body with a mainspring and a firing pin, a rotatable bit head, a handle, and in the receiver, locking means interacting with the bolt head.

PRIOR ART

Occasionally, but rarely, guns are provided with a keyhole lock to prevent unauthorized access to the gun. For example, it is known in the art to put a lock in the trigger guard, making the gun unusable to anyone who does not have access to the key to the lock and can remove the lock. In the art it is also known to arrange locking devices extending through the butt into the cylinder mechanism blocking it. These technical solutions have in common that they presuppose special locking devices which must be mounted on or in the gun when locking it, and must be kept by the user when the gun is used. This is felt to be impractical which is probably the prime reason for the fact that their use is limited.

DISCLOSURE OF THE INVENTION

The object of the invention is to provide an improved device for the prevention of unauthorized use of repeating rifles, in the interest of crime prevention and accident prevention. The invention is characterized in that the device comprises a keyhole lock, arranged in the cylinder mechanism where it prevents, when locked, the bolt head from being turned out of its engagement with the studs in the receiver, whereby the gun is barred from being opened, ie the bolt from being moved rearwards in the receiver. Preferably the lock in the cylinder mechanism comprises a lock plunger which when in locking position prevents the firing pin and the bolt body to move axially relative to one another, thereby barring the handle from moving from its locking position. According to a preferred embodiment the lock is a cylinder locked arranged in the centre of the rear end of the bolt, the lock plunger extending radially outwards in the mechanism. Instead of cylinder lock, one could conceive of a combination lock performing the same function, but in this text the expression cylinder lock will be used for simplicity, to avoid confusion with reference to the parts locking the bolt head and the studs in the receiver.

Another object of the invention is to provide a device which may be applied to a repeating rifle with a straight handle movement, so called straight pull action, but the invention is not limited to this field of application and may also be used with slight modifications with conventional repeating rifles with rotating handle movement.

Further objects and characteristics of the invention will become apparent from the appended claims and from the following description of preferred embodiments.

BRIEF DESCRIPTION OF DRAWINGS

In the following description of preferred embodiments, reference will be made to the attached drawings, in which

FIG. 1 is a perspective view of a first embodiment of a bolt mechanism and the receiver as viewed from the rear right side;

FIG. 2 is a plan view of the same mechanism;

FIG. 3 is an exploded view of the main parts of the bolt;

FIG. 4 is an elevation, partly sectional, of the firing pin with the mainspring, the mainspring tube, and the firing pin nut;

FIG. 5 is a sectional view corresponding to V—V of FIG. 4, the surrounding bolt body having been added to the drawing;

FIG. 6 is an elevation of a cylinder lock;

FIG. 7 is a view of the same cylinder lock, corresponding to VII—VII of FIG. 4;

FIG. 8 is an elevation showing the bolt body from the right;

FIG. 9 shows the bolt body from the rear;

FIG. 10 is a perspective view on a larger scale of the means for turning the bolt head and compressing the mainspring;

FIG. 11 shows the rear part of the mainspring tube, the front end of the firing pin nut, and a pair of guiding curves of said parts;

FIG. 12 shows the back side of a rack bar;

FIG. 13 is a view of the same rack, the view corresponding to XIII—XIII of FIG. 12;

FIG. 14 shows the bolt with the bolt head locked, the gun having been fired but the spring not yet compressed;

FIG. 15 shows the same parts after the mainspring has been compressed and the bolt head turned to neutral position;

FIG. 16 is a perspective view of a locking ring of a construction previously known per se, being a part of the system;

FIG. 17 is an exploded view of a firing pin nut fitted with a cylinder lock according to a second embodiment;

FIG. 18 is a view corresponding to XVIII—XVIII of FIG. 17, a rear view of a lock case with a safey cam;

FIG. 19 is a view corresponding to XIX—XIX of FIG. 17, a rear view of the cylinder lock, a pin, and a locking ball on a larger scale;

FIG. 20 is a transverse sectional view of the second embodiment of the bolt body in the area of the locking ball; and

FIG. 21 is a perspective view of part of the transmission of the second embodiment.

The bolt 1 consists of the following main parts, see FIG. 3: A bolt body 5 with a mechanism housing 6, covered by a lid 7, a bolt neck 8, rotatable in the bolt body 5, with a bolt head 9, a mainspring tube 10 with a firing pin 11 movable therein, a firing pin nut 12, a handle 13, a gear transmission arrangement 14 and a cylinder lock 15.

The bolt body 5 consists of a cylinder, the mechanism housing 6 being an integral part of this cylinder, constituting a projection thereon. More specifically, the mechanism housing 6, being generally a parallelepiped, extends at an angle upwards to the right in relation to a vertical plane through the centre line of the barrel. The inclination of the mechanism housing 6 to the vertical plane is about 55°, when the gun is directed normally. The bolt body 5 is provided with a central bore for the bolt neck 8, the mainspring tube 10 and the firing pin nut 12. At the front end the bolt 5 is provided with three claws 16, corresponding to three claws slots 17 between three studs 18, directed radially inwards in the locking

PR 0276

ET50454

ring 4 and forming a claw coupling which locks the ring 4 in the position determined by the bolt body 5 in a way known per se. The design of these parts is described in my aforesaid international patent application WO/8302153.

In the mechanism housing 6 there is a transverse guide 20 for a rack bar 21. The guide 20 is in the form of a groove in the housing, open at both long sides of the housing 6. The guiding groove 20 is bounded at the front side by a well 22 and at the back by the housing body 23. In the housing body there is a recess 24 fitted with a swivel pin 25 for the handle 13. The handle 13 is designed as a two-arm lever The longer lever arm 26 extends from the bolt body 5 and has a grip 27. The shorter lever arm has been designated 28 and extends forward approximately at a right angle to the longer lever arm 26, in the form of a tooth 28 which fits in a slot 29 in the top side of the rack bar 21. A bearing arrangement between the two lever arms of the handle interacts with the swivel pin 25 and has been designated 30. Thus, the handle 13 swivels in a plane perpendicular to the swivel pin 5, the centre axis of which is in turn perpendicular to a plane coinciding with the centre line of the barrel and consequently with the firing pin axis. In other words, the swiveling plane of the handle 13 is parallel to said plane through the centre line, said plane being inclined at an angle of 35° to the vertical plane as the guns is held in a normal position aiming forward. The handle 13 can be turned through an angle of about 35° from a front position, in which the handle is directed directly outwards from the mechanism housing 6, and a rear position, in which the handle 13 is directed at an angle rearwards. The front position is bounded by a separating wall 31 between the recess 24 and a longitudinal groove 32 in the housing body 23 along the left side thereof. The rearward movement of the handle is limited by the front edge 33 of a right side wall 34 of the housing body 23. The two end positions are additionally determined by a stud 35 between the opening 36 in the side wall 34 accomodating the handle 13 and the guide 20. In the front wall 22 there is a front dovetail slot 37 and in the housing body 23 there is a rear dovetail slot 38 to accomodate dovetails 37' and 38', respectively, on the bottom side of the lid 7.

The longitudinal groove 32 along the housing boddy 23 forms a guide for a rotation stop 40. This is in the form of a bar equipped with an extension 41 directed sideways and guided in the groove 32, extending out through an opening in the left side wall 43 of the housing body 23. To the rear of rotation stop 40 there is a spiral spring 44 (rotation stop spring) arranged to press the rotation stop 40 forward. When barring rotation, the front tip 45 of the rotation stop 40 extends past the rear edge of the rack bar guide 20 into a cut 66 in the rack bar 21, thus when in this position preventing the rack bar 21 from moving from a right position to a left position. The extension 41 in this position is flush against the front edge of the opening 42, see FIG. 15. When the extension 41 has been pressed back in the opening 42 by a means devised to this end but not yet described, to the extent that the front tip 45 of the rotation stop has passed the rear edge of the rack bar guide 20 when moving backwards, the rack bar 21 may be moved to the left in the guide 20. Left in this connection signifies at an angle upwards leftwards and right signifies at an angle downwards rightwards, with respect to FIG. 1. The rack bar 21, the handle 13, the rotation stop 40 and the rotation stop spring 44 are locked in their respective places by the lid 7.

On the bottom side of the bolt body 5 there is a guide slot 47, see FIG. 8, to accomodate the sear and at the rear end of the bolt body 5 there is a first recess 48, coinciding with the guide slot 47, and a second recess 49 at the left side of the bolt body 5.

The firing pin 11 extends through the mainspring tube 10 and is screwed to the firing pin nut 12 at its rear end. The nut is provided with a central bore 50 to accomodate the cylinder lock 15, see FIGS. 5, 6, 7 and 9. A key hole has been designated 51, a lock plunger 52, and a key 67. The lock plunger 52 may be turned in a slot 53 in the firing pin nut 12 and a slot 54 in the inside of the bolt body 5 from a position wherein the lock plunger 52 is situated in the slot 49 in front of a specially arranged tooth 55 at the rear end of the firing pin nut, see FIG. 10, to a locked position at a right angle to the said first position, in other words approximately opposite the first recess 48 and the tooth 55 on the firing pin nut 12, said tooth being situated in said first recess. In this first, unlocked position, the firing pin assembly (firing pin, firing pin nut, and mainspring tube) may be moved into and out of the bolt body as the lock plunger 52 moves in or out, respectively, through the recess 49. In the locked position, however, the firing pin assembly is locked in the bolt body 5 by the lock plunger 52 being confined in the slot 54 on the inside of the bolt body 5. In this context it should also be noted, that the slot 54 on the inside of the bolt body 5 is situated in that part of the bolt body 5 which is near the lock plunger 52 when the lock plunger 52 is in its forward position relative to the bolt body, in other words when the mainspring 56 is not compressed. When the mainspring 56 has been compressed, the firing pin nut 12 has been moved rearwards relative to the mainspring tube 10 in a manner to be described later. In this position, the gun cannot be locked, since the lock plunger 52 when in this position no longer coincides with the slot 54 on the inside of the bolt body 5.

The front end of the mainspring tube 10 is threaded, so that the firing pin assembly depicted in FIG. 4 may be screwed to the bolt neck 8. To accomplish this, the former is entered into the bolt bodys 5 from the front end, while the firing pin assembly is entered into the bolt body 5 from the rear, and the two parts are then screwed together inside the bolt body. The rear parts 58 of the mainspring tube 10 has the same external diameter as the firing pin nut 12. One of its two halves is designed as a sector of a pinion 59. This sector is exposed and extends up through an opening 60 in the bolt body 5 in the area of the rack bar guide 20, in such a way that the pinion sector can interact with the teeth 61 on the bottom side of the rack bar 21, see FIGS. 10 and 12. The rear part 58 of the mainspring tube 10 is provided with a compression cam 62 corresponding to and interacting with a compression cam 63 on the firing pin nut 12, so that as the mainspring tube 10 is made to rotate about its axis by means of the transmission 14 (the firing pin nut 12 is barred from turning by the sear catch 64 and the tooth 55 entering their respective slots 48 and 49), the two compression cams will slide against one another whereby the firing pin nut 12 will be pressed rearwards, the mainspring 56 simultaneously being compressed in the mainspring tube 10.

Said rotation of the mainspring tube 10 is accomplished by means of the handle 13, as the handle is moved rearwards from its front position towards its rear

PR 0277

ET50455

position, pivoting about the swivel pin 25. By the leverage applied by the handle the tooth 28 in the slot 29 in the rack bar 21 is moved "rightwards". Thus, the rack bar 21 is moved to the right as the handle is pulled back about the pivot/swivel pin 25, the rack bar 21 by interacting with the pinion sector 59 of the mainspring tube 10 turning the tube clockwise. As the mainspring tube 10 turns, the mainspring 56 is compressed as the two compression cams 62, 63 are pushed and slide against one another as was described above, and as the mainspring tube 10 turns, the bolt neck 8 also turns and hence the bolt head 9 as well. When the turning has been completed, ie when the handle 13 has been brought to its rearmost position, the firing pin tube 10 and hence the bolt head 9 have been turned approximately 60° as a result of the gear ratio of the transmission 14, bringing the studs 18 on the bolt head 9 in coincidence with the claws 16 on the bolt body, the bolt head thereby becoming free to move into and out of the locking ring 4. The starting position before the mainspring is compressed and before the bolt head has been turned to its free position is illustrated in FIG. 14, while FIG. 15 shows the handle in its rearmost position, the mainspring being compressed (note that the firing pin nut has been moved rearwards from the mechanism housing 6) and the bolt head 9 being turned to its free position. In this position the bolt 1 may be moved rearwards in the receiver 2 to allow a new cartridge to be entered into the cartridge chamber. During this procedure, the handle 13 remains in its rearmost position, see FIG. 15. The bolt head is introduced into the locking chamber in the rear part of the barrel (see my international patent application WO83/02153), the claws 16 on the bolt body entering the claw slots 17 in the locking ring 4. During this entire procedure, the handle 13 is prevented from swiveling forwards by the front tip 45 of the rotation stop 40 extending into the rack bar guide 20 and locking the rack bar 21. Only at the very end of the procedure, the rotation stop 40 is moved aside as the extension 41 hits a stop 65 at the left side of the receiver 2, see FIG. 2, thereby being moved rearwards in the opening 42. Finally, the rotation stop leaves the rack bar guide 20. The handle 13 may now be moved forward, turning about the swivel pin 25, and via the rack transmission 14 move the rack bar 21 leftwards, turning the mainspring tube 10, the bolt neck 8, and the bolt head 9, the bolt head being moved into locking position in front of the locking ring 4. In this position, the mainspring is already compressed, since it was compressed when the gun was opened.

It is natural that the design of the mechanism can be modified within the spirit and scope of the invention. Below some modifications will be described with reference to FIGS. 17–21. The amendments, which are believed to be improvements over the first embodiment described above, relate both to the lock-and-key mechanism, making it entirely proof against attempts to pick the lock or to break it open, and to the transmission means transforming the turning movement of the handle into the turning of the bolt head relative to the bolt body.

The firing pin nut fitted with a cylinder lock shown in FIG. 17 comprises a lock sleeve 120 with a compression cam or safety tooth 63', a dog sleeve 121 with a locking ball 52', resting in a hole 129 of smaller diameter than the ball 52', a cylinder lock 15', a steel ring 150 and a socket 125 with a sear catch 64'. The lock sleeve 120 has a threaded bore 122 to accomodate the firing pin. In the wall of the lock sleeve there is a hole 123 for the locking ball 52', the hole diameter being slightly larger than that of the ball. The rear part of the lock sleeve 120 is designed as four claws 124 to be fitted over the cylinder lock 15', the outside of which is provided with four splines 151. In FIG. 19 one of these spline keys is obscured by the locking ball 52'. The cylinder lock 15' per se is in accordance with pior art and comprises in a known way a finger 152 to be entered into the dog sleeve 121 there to engage said sleeve by means of a pin 153, see FIG. 19. The cylinder lock 15' in accordance with prior art has a key slot 51' coinciding with a slot in the steel ring 150. In the front part of the socket 125 a notch 126 has been cut to accommodate the compression cam 63' and the side of the socket has a hole 127 for the locking ball 52'. When the device is assembled, the two holes 123 and 127 of the same size are coaxial. At the rear end of the socket there is an axial hole 128 to accommodate the steel ring 150. At assembly, the steel ring 150 is placed from the inside in the hole 128, the cylinder lock 15' and the dog sleeve 121 are put into the socket 125, and the lock sleeve 120 is entered between the inside of the socket 125 and the cylinder lock 15', so that the spline keys 151 fit between the claws 124. The assembly is locked by a locking pin, not shown, through the front parts of the socket and lock sleeve walls. The bolt body 5', see FIG. 20, has a recess 48' to accomodate the sear catch 64', and directly opposite this recess 48' there is a recess 49' to accommodate the locking ball 52'.

The device described with reference to FIGS. 16–21 functions as follows. To lock the gun, a key is entered in the key slot 51'. When the key is turned to lock the gun, the locking ball 52' is lifted out of the hole 129 in the dog sleeve 121, as the finger 152 and hence the tubular dog sleeve 121 is turned 90° about the centre axis. The locking ball 52' is pressed radially outwards through the holes 123 and 127 in the lock sleeve and the socket 125, respectively, to enter the recess 49' in the bolt body 5', see FIG. 20. This locks the integrated firing pin nut 12' to the bolt body 5', barring these parts from moving relative to one another. It is impossible to drill the lock open from the key hole end, since the cylinder lock is made of hardened steel. Should an attempt be made to force the lock for example by sticking a screwdriver tip into the key hole and trying to turn it, this will only, if any turning takes place, result in the permanent fixation of the locking ball in its position. The only way to open the gun if this has happened is to make a hole radially directly outside the ball 52', such as by spark machining, but this would require both advanced equipment and special spark machining expertise, as well as a precise knowledge of the position of the locking ball 52'.

Referring now to the improved transmission means, this improvement comprises a modification of the rack bar, designated by reference numeral 21', and the shorter lever arm, designated 28'. The lever arm 28' is designed in the form of a sector of a pinion, and the rack bar 21' has been provided with teeth on that part also which faces the lever arm 28'. The bottom side of the rack bar 21' is still provided with teeth 61 interacting with the teeth 59 on the mainspring tube 10, see FIG. 10 of my previous patent application.

I claim:

1. Device in a repeating rifle with a cylinder bolt mechanism comprising a receiver and a bolt, having a rear part, disposed within said receiver; said bolt having an axis and comprising a bolt body, having a rear and an inside, a mainspring, a firing pin, a rotatable bolt head

PR 0278

ET50456

and a movable handle; said receiver including lock means, lockingly engageable with said bolt head, for locking said cylinder during firing; said firing pin being axially movable relative to said bolt body; said bolt being axially movable in said receiver to a foremost position;

wherein a cylindrical key-lock which can be locked and unlocked by means of a key is arranged in the center of said rear part of said bolt in said cylinder bolt mechanism with a key hole facing rearwards in said center of said rear part of said bolt, said key-lock comprising a lock plunger which is movable on said inside of said bolt body between a non-locking position and a locking position in which the lock plunger prevents the firing pin and the bolt body from moving axially relative to one another, thereby in consequence preventing said handle from being moved out of the position it takes when said bolt has been moved to said foremost position in said receiver and said bolt head has been brought into locking engagement with said lock means in said receiver;

wherein a slot is provided on said inside of said bolt body; and

wherein a recess is provided at said rear of said bolt body such that said lock plunger is movable along said slot on said inside of said bolt body between a non-locking position, in which said plunger is situated in said recess at said rear of said bolt body, and a locking position, in which said plunger does not enter said recess.

2. Device in a repeating rifle with a cylinder bolt mechanism comprising a receiver and a bolt, having a rear part, disposed within said receiver; said bolt having an axis and comprising a bolt body, having a rear and an inside, a mainspring, a firing pin, a rotatable bolt head and handle means for rotating said bolt head; said receiver including lock means, lockingly engageable with said bolt head, for locking said cylinder during firing; said firing pin being axially movable relative to said bolt body; said bolt being axially movable in said receiver to a foremost position;

wherein a cylindrical key-lock which can be locked and unlocked by means of a key is arranged in the center of a part, inside said bolt body and integral with said firing pin, said part being axially movable inside the bolt body when the key-lock is in its non-locking position, and wherein said key-lock comprises a lock plunger, which when in locking position prevents said firing pin and said bolt body from moving axially relative to one another, thereby in consequence preventing said handle means from being moved out of the position it takes when the bolt has been moved to its foremost position in the receiver and the bolt head has been brought into locking engagement with said lock means in said receiver;

wherein said lock plunger is movable along a slot in said part, integral with said firing pin.

3. Device as claimed in claim 2, wherein said part is a firing pin nut.

4. Device as claimed in claim 2, wherein said firing pin has a center line extending along said bolt axis; and said handle means comprises a handle, linearly movable in a plane parallel to said firing pin center line, and transmission means, operably connected to said handle and said bolt head, for transforming the linear movement of the handle into rotary movement of the bolt head, when the key-lock is in its non-locking position.

5. Device in a repeating rifle with a cylinder bolt mechanism comprising a receiver and a bolt, having a rear part, disposed within said receiver; said bolt having an axis and comprising a bolt body, having a rear and an inside, a mainspring, a firing pin, a rotatable bolt head and handle means for rotating said bolt head; said receiver including lock means, lockingly engageable with said bolt head, for locking said cylinder during firing; said firing pin being axially movable relative to said bolt body; said bolt being axially movable in said receiver to a foremost position; wherein a cylindrical key-lock which can be locked and unlocked by means of a key is arranged in the center of a part, inside said bolt body and integral with said firing pin, said part being axially movable inside the bolt body when the key-lock is in its non-locking position, and wherein said key-lock comprises a lock plunger, which when in locking position prevents said firing pin and said bolt body from moving axially relative to one another, thereby in consequence preventing said handle means from being moved out of the position it takes when the bolt has been moved to its foremost position in the receiver and the bolt head has been brought into locking engagement with said lock means in said receiver; and

further comprising compression cams arranged between said part, integral with the firing pin, and a second part, integral with said bolt head, said firing pin arranged to be moved axially rearwards by said compression cams as said second part, integral with the bolt head, is rotated by said handle means, said mainspring simultaneously being compressed; and when said key-lock is in its locking position said rearward movement of said firing pin, and consequently also said rotation of said bolt head and the opening of the gun, is prevented.

6. Device as claimed in claim 5, wherein said firing pin has a center line extending along said bolt axis; and said handle means comprises a handle, linearly movable in a plane parallel to said firing pin center line, and transmission means, operably connected to said handle and said bolt head, for transforming the linear movement of the handle into rotary movement of the bolt head, when the key-lock in in its non-locking position.

7. Device in a repeating rifle with a cylinder bolt mechanism comprising a receiver and a bolt, having a rear part, disposed within said receiver; said bolt having an axis and comprising a bolt body, having a rear and an inside, a mainspring, a firing pin, a rotatable bolt head and handle means for rotating said bolt head; said receiver including lock means, lockingly engageable with said bolt head, for locking said cylinder during firing; said firing pin being axially movable relative to said bolt body; said bolt being axially movable in said receiver to a foremost position;

wherein a cylindrical key-lock can be locked and unlocked by means of a key is arranged in the center of a part, inside said bolt body and integral with said firing pin, said part being axially movable inside the bolt body when the key-lock is in its non-locking position, and wherein said key-lock comprises a lock plunger, which when in locking position prevents said firing pin and said bolt body from moving axially relative to one another, thereby in consequence preventing said handle means from being moved out of the position it takes when the bolt has been moved to its foremost posi-

PR 0279

ET50457

tion in the receiver and the bolt head has been brought into locking engagement with said lock means in said receiver; and

wherein said key-lock comprises a cylinder lock with a dog sleeve and a locking ball, said ball being pressable through a hole in said part, integral with said firing pin, into a recess in said bolt body as the dog sleeve is turned, thereby locking said part, integral with said firing pin, in relation to the bolt body, when the ball is in locking position, and as the dog sleeve is turned in the opposite direction disengaging said part, integral with said firing pin, and said bolt body is returning the locking ball to a non-locking position.

8. Device as claimed in claim 7, wherein said firing pin has a center line extending along said bolt axis; and said handle means comprises a handle, linearly movable in a plane parallel to said firing pin center line, and transmission means, operably connected to said handle and said bolt head, for transforming the linear movement of the handle into rotary movement of the bolt head, when the key-lock is in its non-locking position.

* * * * *

PR 0280

ET50458

PR 0281

ET50459

US005465519A

United States Patent [19]

Blanck

[11] Patent Number: 5,465,519

[45] Date of Patent: Nov. 14, 1995

[54] LOCKING ASSEMBLY AND METHOD FOR A FIREARM

[75] Inventor: Edward Blanck, Camarillo, Calif.

[73] Assignee: Blue Sky Productions, Inc., Arlington, Va.

[21] Appl. No.: 261,096

[22] Filed: Jun. 16, 1994

[51] Int. Cl.[6] F41A 17/42; F41A 17/02

[52] U.S. Cl. 42/70.11; 42/70.01

[58] Field of Search 42/70.01, 70.11; 89/148

[56] References Cited

U.S. PATENT DOCUMENTS

633,939	9/1899	Ackerman	42/70.11
1,226,566	5/1917	Moore	42/70.01
1,405,321	1/1922	Peterson	89/148
2,945,316	7/1960	Molno	42/66
3,462,869	8/1969	Wallace	42/66
3,553,877	1/1971	Welch, et al. .	
3,605,311	9/1971	Hermann	42/70.11
3,673,725	7/1972	Cravener	42/70.08
3,735,519	5/1973	Fox	42/70.11
3,882,622	5/1975	Periotto	42/70.11
4,136,475	1/1979	Cemille	42/70.11
4,141,166	2/1979	Schultz	42/70.08
4,261,127	4/1981	Karkkainen	42/70.11
4,532,729	8/1985	Von Muller	42/70.11
4,654,992	4/1987	Lavergne	42/70.01
5,081,779	1/1992	Pack	42/70.11

FOREIGN PATENT DOCUMENTS

78449	12/1894	Germany	42/70.01
92831	12/1959	Netherlands	42/70.01

Primary Examiner—Stephen M. Johnson
Attorney, Agent, or Firm—Sherman and Shalloway

[57] ABSTRACT

The present invention presents a locking assembly which may be installed in a firearm during manufacture or as a retrofit to an existing firearm and which locks the bolt of the firearm against normal movement in the receiver. The assembly includes a cylinder lock installed in the stock of the firearm below the receiver and which has a locking element which is extendable through an aperture in the receiver to engage a blind aperture provided in the bolt. In this manner the assembly locks the bolt in a position which prevents loading and firing of the weapon and which also prevents its disassembly until the lock is released. The locking assembly may also be provided in kit form for retrofitting particular makes and models of firearms wherein the kit includes the lock assembly, a replacement receiver, a replacement bolt and a template for locating the position on the stock in which to install the lock assembly.

29 Claims, 5 Drawing Sheets

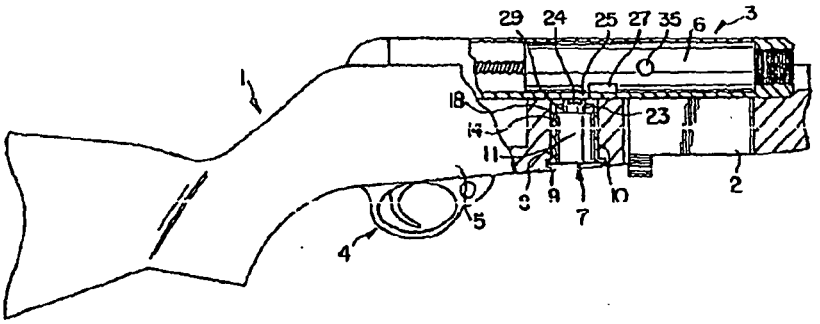

PR 0282

ET50460

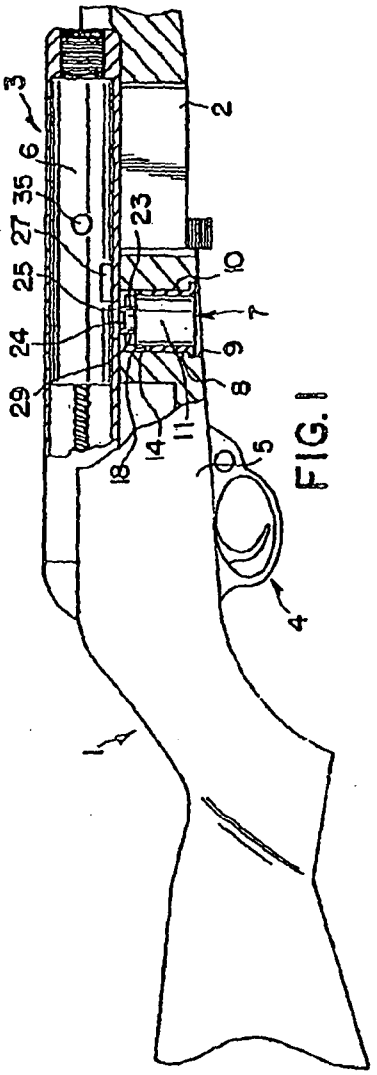

FIG. 1

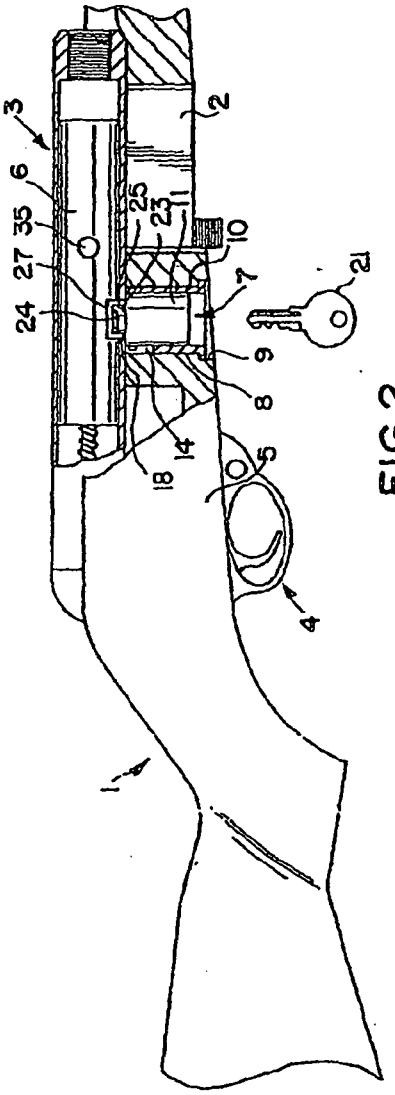

FIG. 2

PR 0283

ET50461

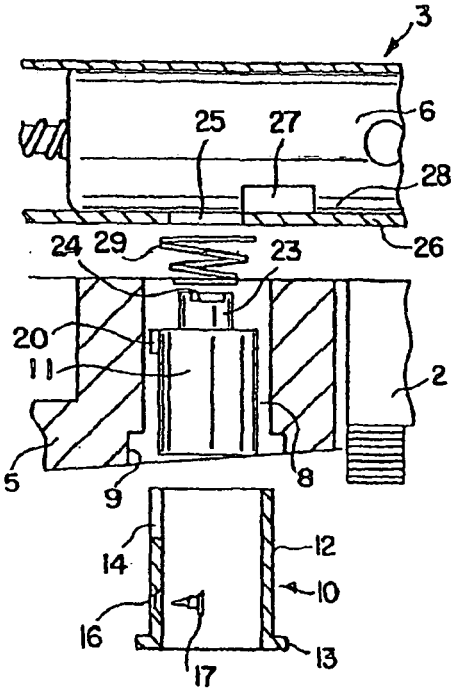

FIG.3

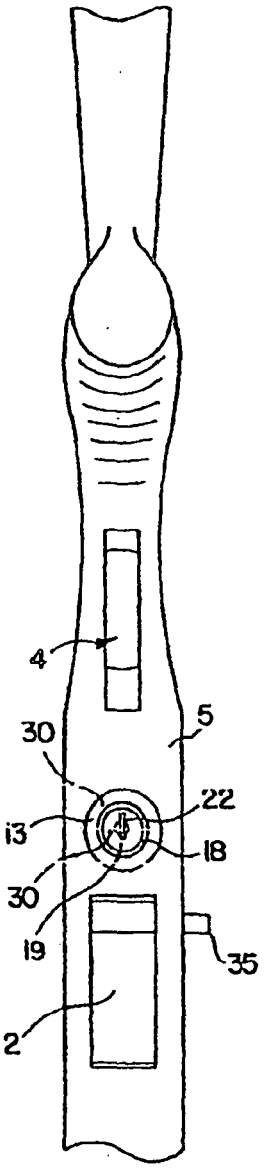

FIG.4

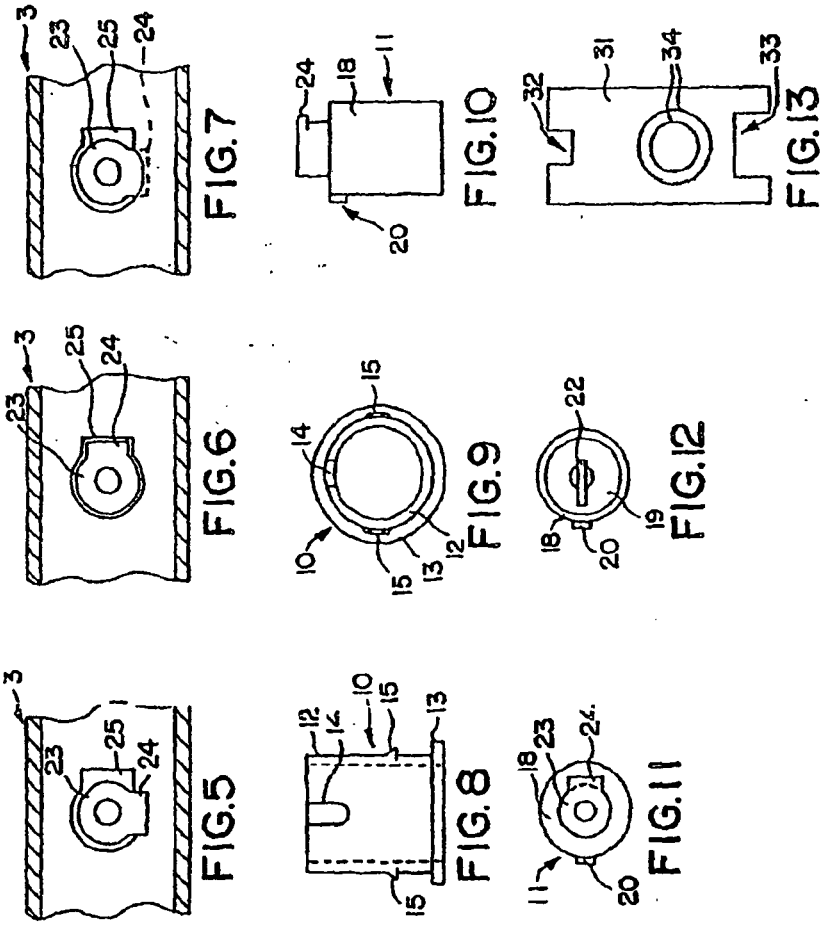

PR 0285

ET50463

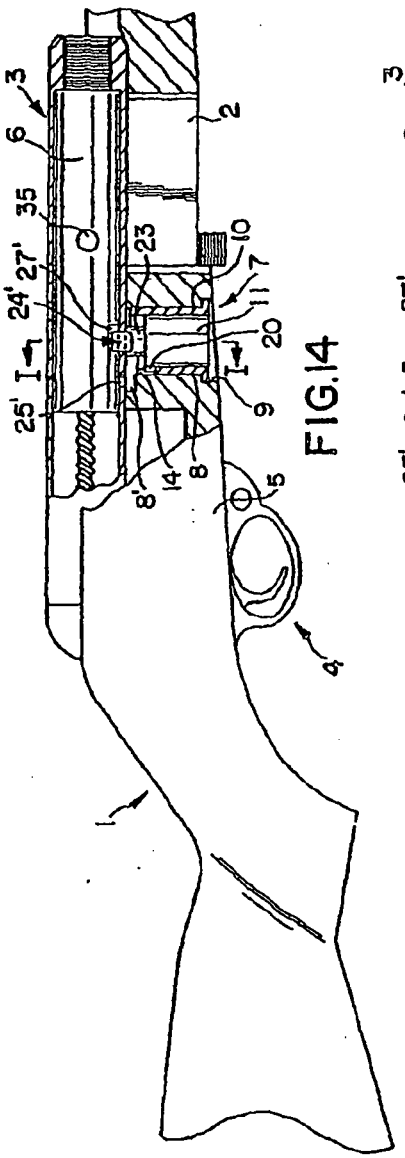

FIG.14

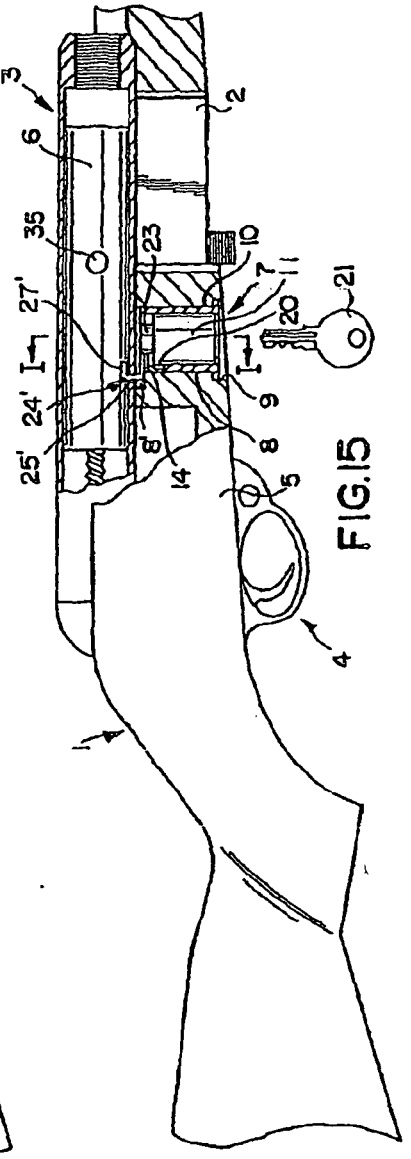

FIG.15

PR 0286

ET50464

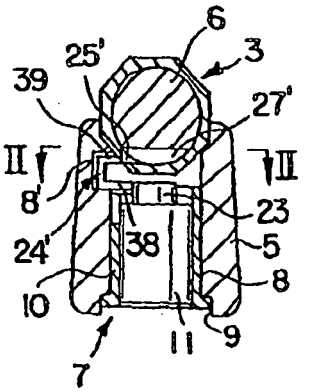

FIG.16

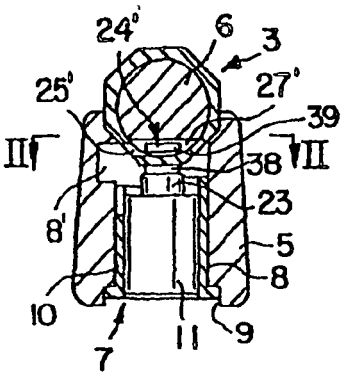

FIG.17

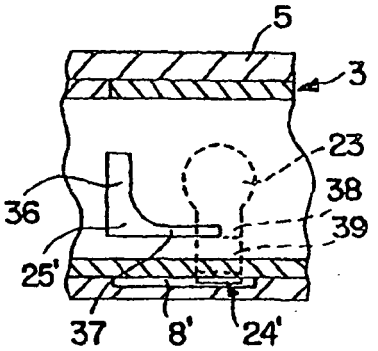

FIG.18

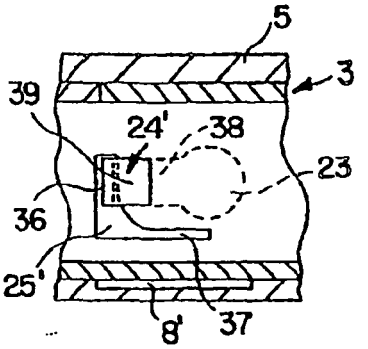

FIG.19

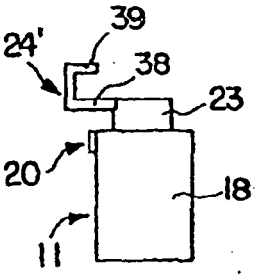

FIG.20

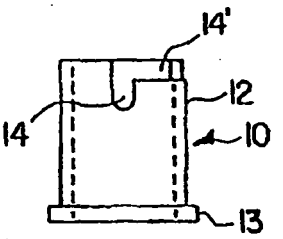

FIG.21

PR 0287

ET50465

LOCKING ASSEMBLY AND METHOD FOR A FIREARM

FIELD OF THE INVENTION

The present invention relates to a locking assembly and a method for locking firearms. More particularly, the present invention relates to a method and a locking assembly used therewith for locking the bolt action of a firearm whereby use of the firearm is prevented until the locking assembly is released. Most particularly, the present invention relates to a locking assembly which is installed as an integral part of the firearm and which is operable independently of the trigger mechanism to lock the firing bolt in a position within the receiver such that the firearm cannot be loaded or discharged and which prevents disassembly of the firearm until the locking assembly is unlocked.

BACKGROUND OF THE INVENTION

There has been a constant need for safety devices in firearms to prevent their accidental discharge or use by unauthorized individuals. To this end, various locking devices and mechanisms have been developed to prevent operation of the firearm. Various devices are available which connect to the trigger housing of a firearm and lock the housing against access to the firearm trigger. With such devices, the firearm is not disabled by the locking mechanism but is simply rendered inoperable while the locking mechanism is in place on the trigger guard. Such mechanisms, since they are removable from the firearm, may be easily misplaced and lost.

In addition, devices are known for use in magazine type firearms, particularly those which employ a box type magazine, which fit into the magazine receiver in place of the normal magazine and which are locked in place. Such devices are similar to the trigger locks in that they merely render the weapon inoperable for use with a magazine. They may still permit the weapon to be used in a single shot fashion where each round is manually loaded Also, like the trigger locks, since these devices are fully removable, they may be misplaced or lost, thus rendering them unusable.

It is therefore desirable to provide some form of locking mechanism which may be integrated with a firearm at manufacture or which may be readily retrofitted to existing firearms and which remains with the firearm at all times. It is also desirable to provide a simple locking mechanism which disables the firearm completely when locked but does not interfere with the normal operation of the firearm when the mechanism is unlocked. Furthermore, it is desirable to provide a locking mechanism which locks the firearm in such a manner that disassembly of the firearm in order to remove the locking mechanism is not possible while the firearm is locked. The prior art includes several attempts which have been made to fill the need for such a device.

U.S. Pat. No. 633,939 to Ackerman discloses a locking device for shotgun break levers. Operation with a key selectively moves a pin into position within a socket in the break lever to lock the lever in position and thereby prevent the weapon from being opened. This mechanism does not prevent the weapon from being discharged in the event that the lock is set after the weapon is loaded.

U.S. Pat. No. 2,945,316 to Mulno discloses a safety lock for firearms in which a threaded means is operated by a removable key to be advanced or retracted so as to engage a part of the firing mechanism of the weapon in which it is installed. The device includes a structure to prevent operation by other than the proper key.

U.S. Pat. No. 3,462,869 to Wallace discloses a key operated safety device for firearms which places a cylinder lock in an opening in the hammer of the weapon. In order to release the lock and permit operation of the weapon the lock must be substantially withdrawn from the weapon.

U.S. Pat. No. 3,553,877 to Welch discloses a firearm safety device which makes use of a key lock mechanism and an actuator arm to shift a lever into a position where it prevents movement of the weapon's integral safety mechanism from a "safe" to a "fire" position. This device operates through interfacing with the complex trigger mechanism.

U.S. Pat. No. 3,673,725 to Cravener discloses a locking arrangement using a key device which selectively positions a hammer rod obstruction into the rearward path of the weapon's hammer. The obstruction prevents the hammer from being withdrawn. In alternative embodiments, the device operates to bind other moving parts of a firearm such as a safety release lever.

U.S. Pat. No. 3,735,519 to Fox discloses a locking device that prevents movement of the weapon's safety to a firing position. The lock includes a combination tumbler requiring that the proper combination of numbers be arranged to disconnect the lock and allow the sear to pivot away from the bolt, thereby enabling the bolt to move. This device has a complexity level which renders it appropriate only for installation at the time of the weapon's manufacture inasmuch as it engages the trigger mechanism.

U.S. Pat. No. 3,882,622 to Periotto discloses a locking device to lock a weapon safety latch mechanism into position. This device requires extensive tooling to fit it into place and is more suited to integral manufacture with the weapon, rather than as a retrofit.

U.S. Pat. No. 4,136,475 to Centille discloses a safety device for firearms which causes a locking pin to be shifted into position to prevent operation of the firearm trigger. The device makes use of a rack and pinion gear linkage by which the locking pin is movable into engagement with the trigger seat.

U.S. Pat. No. 4,261,127 to Karkkainen discloses a safety lock for firearms having a wooden stock with a pistol end wherein the lock is mounted in the pistol end and employs a flexible shaft for transmitting the movement of the tumbler to a member which engages and blocks the operation of the trigger mechanism of the weapon. Such flexible shafts are often susceptible to binding thus rendering the mechanism unreliable nor does this mechanism prevent disassembly of the weapon.

U.S. Pat. No. 5,081,779 to Pack discloses a safety lock for firearms which includes a hammer pin which is in constant contact with the hammer of the firearm and which can be locked into position by aligning a lock surface with a plunger. If the hammer pin jams or binds in any way it may prevent operation of the lock or the weapon even when the mechanism is unlocked.

The prior art presents locking mechanisms which are complex, which may be subject to interference or jamming and which are therefore unreliable. Others do not lend themselves to ease of use or installation either during manufacture or as a retrofit to existing weapons Furthermore, the prior art does not disclose a locking apparatus which both locks the weapon against use and prevents its disassembly in order to circumvent the locking mechanism. The need therefore remains for a simple, effective and reliable apparatus for locking firearms against unauthorized use in which the locking mechanism operates to prevent the

PR 0288

ET50466

movement of a key element in the firing mechanism of the firearm and which prevents disassembly of the firearm in order to circumvent the locking mechanism.

SUMMARY OF THE INVENTION

It is an object of the present invention to provide a method and apparatus for locking a firearm against unauthorized use which is simple and easy to use.

It is a further object to provide a locking assembly for firearms which positively locks the bolt in the receiver of a firearm without interfering with any other mechanisms of the weapon.

It is also an object of the present invention to provide a locking assembly for firearms which prevents disassembly of the firearm to circumvent the locking mechanism.

It is a still further object of the present invention to provide a locking mechanism for a firearm which may be installed during the manufacture of the firearm or as a retrofit into existing firearms.

It is an even further object of the present invention to provide a kit for installing a locking mechanism as a retrofit into an existing firearm.

Further objects and advantages will become evident from the following description.

The present invention provides a locking assembly for a firearm having a stock, a trigger mechanism, a receiver positioned along an upper side of the stock and a bolt housed within the receiver and reciprocatable therein whereby a round is chambered and fired. The receiver has an aperture in its lower wall and the bolt is provided with a blind aperture in its underside which is alignable with the receiver aperture. The locking assembly comprises a lock sleeve positioned vertically in the stock forward of the trigger assembly and below the receiver in line with the receiver aperture. A lock body is retained in the lock sleeve and is adapted to protrude through the receiver aperture to releasably engage the bolt.

The present invention also provides a firearm comprising a stock having an upper surface and a lower surface and housing a trigger mechanism, a receiver attached to the upper surface of the stock and capable of receiving ammunition and a firing bolt reciprocatingly housed in the receiver and actuatable by the trigger mechanism to discharge the firearm. The receiver has an aperture in its lower wall adjacent the upper surface of the stock while the bolt is provided with a blind aperture in its under side to be alignable with the receiver aperture. A lock mechanism is mounted in the stock forward Of said trigger mechanism and extends vertically from the lower surface of the stock to the upper surface in line with the receiver aperture. The lock mechanism includes a locking element which is extendable through the receiver aperture to releasably engage the blind aperture in the bolt and lock the bolt against movement within the receiver.

The present invention also provides a method of locking a firearm against use by unauthorized individuals and against disassembly wherein the firearm comprises a stock, a trigger mechanism in the stock, a receiver mounted on the upper surface of the stock and a bolt reciprocatingly housed within the receiver. The method comprises the steps of providing a vertical aperture in the stock forward of the trigger mechanism and extending from the underside of the stock upwards to the receiver and adapted to receive a lock mechanism; providing an aperture in the wall of the receiver which is in line with the stock aperture and which is adapted to permit passage of a lock element; providing a blind aperture in the bolt whereby the blind aperture is alignable with the receiver aperture and the stock aperture by partially drawing the bolt and is adapted to receive a lock element; and mounting a cylinder lock mechanism within the stock aperture wherein the lock mechanism comprises a lock element which is extendable through the receiver aperture and receivable within the blind aperture in the bolt whereby the bolt is releasably fixed against movement within the receiver at a position between its fully drawn position and its fully forward position and whereby the bolt cannot be fully drawn for removal from the receiver until the lock is released.

The present invention also provides a kit for retrofitting a locking assembly to a firearm having a stock housing a trigger mechanism, a receiver mounted on the upper surface of the stock and a bolt housed within the receiver for reciprocating movement therein, wherein the kit comprises a replacement receiver having an aperture cut into its lower wall, a replacement bolt having a blind aperture formed in its lower surface and having a shape and size to receive part of a lock mechanism, a lock mechanism for implantation into the stock below the receiver and at a point corresponding to the receiver aperture, and a template positionable on the stock to indicate the location for drilling an aperture in the stock to accommodate the lock mechanism so that the aperture will be in line with the receiver aperture.

BRIEF DESCRIPTION OF THE DRAWINGS

FIG. 1 is a partial cut-away view of a rifle showing the locking assembly of the present invention in the unlocked position.

FIG. 2 is a partial cut-away view of a rifle showing the locking assembly of the present invention in the locked position.

FIG. 3 is an enlarged exploded view of the locking assembly of the present invention.

FIG. 4 is a view of the underside of a rifle with the locking assembly of the present invention.

FIG. 5 is a view inside the receiver of a firearm showing the lock in the locked position.

FIG. 6 is a view inside the receiver of a firearm showing the lock in an intermediate position alinged with the receiver aperture.

FIG. 7 is a view inside the receiver of a firearm showing the lock in the unlocked position.

FIG. 8 is a side view of a lock sleeve of the locking assembly of the present invention.

FIG. 9 is a top view of the lock sleeve of FIG. 8.

FIG. 10 is a side view of the lock body of the locking assembly of the present invention.

FIG. 11 is a top view of the lock body of FIG. 10.

FIG. 12 is a bottom view of the lock body of FIG. 10.

FIG. 13 is a planar view of a template for use with a kit for retrofit installation of the locking assembly of the present invention.

FIG. 14 is a partial cut-away view of a rifle showing an alternative embodiment of the locking assembly of the present invention in the unlocked position.

FIG. 15 is a partial cut-away view of a rifle showing the alternative embodiment of the locking assembly of the present invention in the locked position.

PR 0289

ET50467

FIG. 16 is a cross-section taken along line I—I of FIG. 14 showing the alternative embodiment of the locking assembly of the present invention in the unlocked position.

FIG. 17 is a cross-section taken along line I—I of FIG. 15 showing the alternative embodiment of the locking assembly of the present invention in the locked position.

FIG. 18 is a view along line II—II of FIG. 16 showing the inside of the receiver with the alternative embodiment of the locking assembly of the present invention in the unlocked position.

FIG. 19 is a view along line II—II of FIG. 17 showing the inside of the receiver with the alternative embodiment of the locking assembly of the present invention in the locked position.

FIG. 20 is a side view of the alternative embodiment of the lock body of the present invention.

FIG. 21 is a side view of the alternative embodiment of the lock sleeve of the present invention.

DETAILED DESCRIPTION OF THE INVENTION

The present invention will be described in combination with a semi-automatic, bolt action rifle having a box magazine ammunition feed. However, it is applicable to any type of bolt action firearm from a single shot, manually operated rifle to a multi-shot, fully automatic weapon, and may be adapted for use on firearms having box magazines or tubular magazines.

FIGS. 1, 2, 14 and 15 illustrate the locking assembly of the present invention installed in a semi-automatic rifle 1 which uses a box magazine 2 to supply ammunition to receiver 3 with FIGS. 1 and 2 illustrating a first embodiment and FIGS. 14 and 15 illustrating a second embodiment. A trigger mechanism 4 is housed in stock 5 rearward of magazine 4 and a bolt 6 is reciprocatingly housed in receiver 3. The locking assembly of the present invention comprises three essential parts, receiver 3, bolt 6 and a cylinder lock assembly 7 mounted in stock 5 below receiver 3 and between trigger mechanism 4 and magazine 2. Receiver 3, bolt 6 and cylinder lock assembly 7 cooperate to provide a method and assembly for positively locking a firearm against unauthorized use and disassembly.

Cylinder lock assembly 7 fits into an aperture 8 drilled vertically through stock 5 so as to extend completely through stock 5 and expose the underside of receiver 3. The lower end of aperture 8 is preferably recessed 9 for a reason which will become evident. Within aperture 8 is fit cylinder lock assembly 7 which includes a lock sleeve 10 and cylinder lock 11. These items are more fully illustrated in FIGS. 8–12, 20 and 21.

Lock sleeve 10 comprises a cylindrical wall 12 with a horizontally, outwardly extending flange 13 about its lower end. In the upper end of cylinder wall 12 is a blind slot 14 which extends partway downward from the upper edge of sleeve 10. Preferably, sleeve 10 is provided with means to retain sleeve 10, and thereby the entire lock assembly 7, within aperture 8 in stock 5. Such means may take the form of teeth or detents 15 formed on the outer surface of cylindrical wall 12 as shown in FIGS. 8 and 9. Such teeth 15 will engage and dig into the material of stock 5 when sleeve 10 is inserted and will resist withdrawal of sleeve 10. In addition, by providing aperture 8 with recess 9, flange 13 is recessed within stock 5 thereby making it more difficult to pry sleeve 10 out of aperture 8.

An alternative means for retaining sleeve 10 in aperture 8 is shown in FIG. 3 wherein sleeve 10 is provided with a horizontal aperture 16 through wall 12 whereby a screw 17 or similar fastener may pass through to securely fasten sleeve 10 within stock 5. Preferably aperture 16 is countersunk on the inner surface of wall 12 so that the head of screw 17 does not interfere with the operation of cylinder lock 11. Also preferably, when this means for securing sleeve 10 is used, the aperture 16 is placed at a level within sleeve 10 so as to be covered by cylinder lock 11 when the weapon is fully assembled. In this manner, the lock assembly 11 may not be removed without disassembling the weapon and, as will be seen hereinafter, this is not possible unless the lock assembly 7 is unlocked.

In the first embodiment, as seen in FIGS. 1–3, cylinder lock 11 fits into sleeve 10 and is slidable therein between locked and unlocked positions. Cylinder lock 11 comprises a lock shell 18 and tumbler 19. Shell 18 is provided with a tab 20 extending laterally adjacent the upper edge of shell 18. Tab 20 fits in blind slot 14 of sleeve 10 and this combination serves to both guide cylinder lock 11 in its vertical travel within sleeve 10 and prevent rotation of lock shell 18 when tumbler 19 is rotated between locked and unlocked positions. Furthermore, because blind-slot 14 and tab 20 are at the upper ends of their respective lock elements, when the weapon is fully assembled with the lock assembly 7 in place, cylinder lock 11 is securely confined within stock 5 and cannot be removed.

Tumbler 19 preferably comprises a standard key actuated cylinder lock tumbler mechanism and is rotatable within lock shell 18. A key 21 fits into keyway 22 in tumbler 19 to unlock the mechanism and permit rotation of tumbler 19. On the upper end of tumbler 19 is lock cam 23 which comprises an extension of tumbler 19 with a partial flange 24 extending laterally from its upper end to form a lip. Inasmuch as lock cam 23 is part of tumbler 19 it will rotate with tumbler 19 between locked and unlocked positions and relative to shell 18.

As seen in the drawing figures, lock assembly 7 fits into stock 5 forward of trigger mechanism 4 and immediately below receiver 3. Furthermore, as noted previously, receiver 3 and bolt 6 are integral parts of the entire locking assembly of the present invention. Toward this end, receiver 3 is provided with an aperture 25 in its lower wall 26. Aperture 25 is located so as to be positioned over and in line with hole 8 of stock 5 when the weapon is assembled. Furthermore, as shown in FIGS. 5–7, where bolt 6 has been omitted for clarity, aperture 25 has a shape which corresponds to the overall shape of lock cam 23 with its integral partial flange 24. In this manner, cylinder lock 11 can be actuated so that lock cam 23 will pass through aperture 25 when tumbler 19 is rotated to the unlocked position as shown in FIG. 6, but will not pass through when tumbler 19 is in the locked position, shown in FIGS. 5 and 7. FIG. 5 is a view inside receiver 3 showing lock cam 23 in its position when the firearm is locked with lock cam 23 turned so that partial flange 24 overlaps the edge of aperture 25. This view corresponds to the view in FIG. 2 wherein cylinder lock 11 has been pushed upward to extend lock cam 23 through aperture 25 into receiver 3 and blind aperture 27 in bolt 6. In FIG. 6, lock cam 23 has been rotated to the unlocked position so that lock cam 23 and partial flange 24 are lined up with aperture 25 and may pass through aperture 25. FIG. 6 illustrates lock cam 23 retracted from receiver 3 through aperture 25 and rotated to the locked position to prevent inadvertent passage back through aperture 25 into receiver 3 when the firearm is being operated. This view corresponds

PR 0290

ET50468

to the view given in FIG. 1.

Since bolt 6 fits closely within receiver 3 and since one object of the present invention is to provide a locking assembly whereby bolt 6 is locked against movement within receiver 3, bolt 6 is provided with blind aperture 27 in its lower surface 28 to receive lock cam 23 when it is extended through aperture 25 and rotated to the locked position. This relationship is clearly shown in FIG. 2. Although blind aperture 27 may be located at any point along the length of bolt 6, it is preferably located so that bolt 6 must be partially drawn rearward to line up blind aperture 27 with aperture 25. Furthermore, blind aperture 27 is of a size to accept lock cam 23 and partial flange 24 regardless of the position of rotation of tumbler 19.

In order to ensure that cylinder lock 11 retracts from engagement with receiver 3 and bolt 6 when it is unlocked, a spring 29 is provided between the top of cylinder lock 11 and the underside of receiver 3 within aperture 8. When lock assembly 7 is locked, spring 29 is compressed between lock cylinder 11 and receiver 3. Upon unlocking of assembly 7, spring 29 forces lock cylinder downward so that lock cam 23 is positively removed from engagement with receiver 3 and bolt 6. The strength of spring 29 also maintains cylinder lock in the retracted position shown in FIG. 1 to prevent inadvertent engagement of lock cam 23 with bolt 6 during operation of the firearm. As pointed out above, tab 20 on cylinder lock shell 18 is confined within blind slot 14 in sleeve 10 thus providing a guide for the vertical movement of cylinder lock 11 between its extended and retracted positions. Furthermore, blind slot 14 serves to trap tab 20 between receiver 3 and the bottom of blind slot 14 so that cylinder lock 11 cannot be removed from the weapon. In a similar manner, since most weapons of this type require that the bolt be drawn fully rearward before it can be removed from the receiver and the receiver removed from the stock, the locking assembly of the present invention also prevents removal of bolt 6 which, in turn prevents access to lock assembly 7 by removal of receiver 3. Thus, when lock assembly 7 is engaged with bolt 6 and locked into position, neither bolt 6, receiver 3 nor lock assembly 7 may be removed from the firearm.

As FIG. 4 shows, the lock assembly 7 may be provided with indicia 39 on the lower end of tumbler 19 and the outer surface of sleeve flange 13 to indicate whether tumbler 19 is turned to the locked or unlocked position.

The locking assembly of the present invention may be easily and readily incorporated into the manufacturing process of firearms with a minimum of added steps to the process. Specifically, aperture 8 and recess 9 must be drilled in stock 5 and may be done contemporaneously with the milling of the trigger locations, magazine receiving apertures, and the like. In cases of firearms where the stock is molded from a polymer, aperture 8 and recess 9 may be drilled after molding or the mold may be modified so that aperture 8 and recess 9 are formed at the time of molding. Similarly, aperture 25 in receiver 3 and blind aperture 27 in bolt 6 may be formed at the time these pieces are forged, cast or stamped, or aperture 25 and blind aperture 27 may be milled in their respective parts after manufacture.

The locking assembly of the present invention may also be provided as an aftermarket kit for retrofitting to existing firearms by gunsmiths or gun owners. Toward this end, such a kit includes lock assembly 7, a replacement receiver 3 and a replacement bolt 6 all sized to fit a specific brand and model of firearm. In addition, a template is included to provide an accurate guide for drilling aperture 8 and recess 9 in the stock of the firearm for which the kit is supplied. FIG. 13 illustrates a prospective template 31 for such a kit which is provided with a trigger notch 32 and a magazine notch 33. Markings 34 are provided to indicate the size and location for drilling aperture 8 and recess 9 relative to the location on the firearm of trigger assembly 4 and magazine 2. Preferably, when template 31 is placed on the lower surface of stock 5 between trigger assembly 4 and magazine 2, notch 32 will embrace trigger assembly 4 and notch 33 will embrace magazine 2. Template 31 may then be temporarily secured to stock 5 and aperture 8 and recess 9 drilled at the locations indicated by markings 34. The firearm is disassembled before drilling.

Following drilling of aperture 8 and recess 9, lock sleeve 10 is inserted into aperture 8 from the underside of stock 5 and is secured therein. Cylinder lock 11 is then inserted into sleeve 10 from the upper side of stock 5 and spring 29 is set in place. With lock assembly 7 in place, the replacement receiver 3 is installed with aperture 25 in line with aperture 8 and cylinder lock 11. Replacement bolt 6 is then installed and the firearm is reassembled.

To lock a firearm in which the first embodiment of the locking assembly of the present invention is installed, bolt 6 is drawn to line up blind aperture 27 with receiver aperture 25. Using key 21, tumbler 19 is rotated to the unlocked position shown in FIG. 6 to align lock cam 23 with aperture 25 and cylinder lock 11 is pushed upward against spring 29 so that lock cam 23 passes through aperture 25 into blind aperture 27. Tumbler 19 is then turned to the locked position shown in FIG. 5 and key 21 is removed. In the locked position of FIG. 5, lock cam 23 has been turned out of alignment with aperture 25 so that partial flange 24 engages the inner surface of receiver 3 and prevents spring 29 from retracting cylinder lock 11. Furthermore, since lock cam 23 also extends into blind aperture 27, bolt 6 is prevented from moving forward or backward within receiver 3 and is prevented from being fully withdrawn from receiver 3 thus preventing disassembly of the firearm. Without such disassembly, removal of cylinder lock 11 is not possible without causing significant damage to stock 5. By locating blind aperture 27 such that, when locked, bolt 6 is neither fully forward nor fully rearward, the firearm may be locked so that it is in a non-cocked condition and the firing chamber is blocked so that a round of ammunition cannot be chambered. Preferably blind aperture 27 is located on bolt 6 so that bolt 6 need be drawn rearward only a short way to align blind aperture 27 with receiver aperture 25.

To unlock the firearm, bolt 6 may be held in place by cocking lever 35 while tumbler 19 is turned to the unlocked position of FIG. 6 using key 21. Spring 29 will then force cylinder lock 11 to retract within sleeve 10 thus moving lock cam 23 out of engagement with bolt 6 and receiver 3. Bolt 6 will then be released for movement within receiver. As a safety precaution, tumbler 19 should be rotated to the locked position and key 21 removed following unlocking of the weapon. In this manner, lock cam 23 will be positioned as shown in FIG. 7 and it will not be possible to inadvertently re-engage lock cam 23 with bolt 6 while the weapon is being fired.

In the second embodiment of the present invention illustrated in FIGS. 14–21, the parts, assembly and general operation of the locking assembly are substantially identical to those of the first embodiment with the exception that the locking action of the second embodiment is achieved through rotation of the lock tumbler only. In the second embodiment cylinder lock 11 is not required to move vertically within lock sleeve 10. However, lock shell 18 is

PR 0291

ET50469

prevented from rotating relative to lock sleeve 10 by the same cooperation of blind slot 14 and tab 20 as in the first embodiment.

FIGS. 14 and 15 illustrate the second embodiment in a semi-automatic rifle 1 as before and in the unlocked and locked positions respectively. FIGS. 16 and 17 are cross-sections taken along lines I—I of FIGS. 14 and 15, while FIGS. 18 and 19 are cross-sections along lines II—II of FIGS. 16 and 17 looking down into receiver 3 with bolt 6 omitted for clarity.

In the second embodiment, receiver aperture 25' comprises a substantially L-shaped cut-out in the lower wall of receiver 3 as shown in FIGS. 18 and 19. Aperture 25' has a first leg 36 transverse to the longitudinal axis of receiver 3 and a second leg 37 running parallel to the longitudinal axis along the lower edge of receiver 3. As with receiver aperture 25 of the first embodiment, receiver aperture 25' is located so as to be substantially in line with stock aperture 8 in order to receive a locking member 24' extending from lock cam 23.

Corresponding to partial flange 24, locking member 24' extends from lock cam 23 on the upper end of tumbler 19 and is substantially C-shaped. Lower leg 38 of locking member 24' connects to cam 23 and upper leg 39 traverses receiver aperture 25' as tumbler 19 is rotated relative to lock shell 18. In this manner, locking member 24' is rotatable through an arc of about 45° between an unlocked position where it is outside of receiver 3, as shown in FIGS. 16 and 18, to a locked position where it traverses receiver aperture 25' and upper leg 39 of locking member 24' passes through transverse leg 36 of receiver aperture 25' to engage blind aperture 27' of bolt 6. To facilitate engagement of locking member 24', blind aperture 27' of bolt 6 is preferably a transverse slot milled across the lower surface of bolt 6 in substantially the same position as blind aperture 27 of the first embodiment so that bolt 6 must be drawn partially rearward for locking as shown in FIG. 15.

In order to accomodate locking element 24' when cylinder lock 11 is unlocked, a slot 8' is milled into stock 5 along one side of receiver 3 at the upper end of aperture 8. Additionally, the upper edge of lock sleeve 10 is preferably relieved 14' through the arc of rotation between locked and unlocked positions for passage of locking element 24'

To lock a firearm in which the second embodiment of the locking assembly is installed, bolt 6 is partially drawn to align blind aperture 27' with transverse leg 36 of receiver aperture 25'. Using key 21, tumbler 19 is rotated from the unlocked position to the locked position whereby locking member 24' is caused to traverse the legs of receiver aperture 25' and engage blind aperture 27' of bolt 6. To unlock the firearm, the procedure is reversed while holding bolt 6 in place by cocking lever 35. As an aid to alignment of bolt 6 for locking with either embodiment of the present invention, the outer surface of receiver 3 may be provided with a mark or indicia with which to align cocking lever 35 and to indicate that bolt 6 is properly positioned for locking within receiver 3.

While the invention has been shown and described in a preferred embodiment, it is to be understood that this disclosure is for the purpose of illustration and that various changes and modifications may be made without departing from the spirit and scope of the invention as set forth in the appended claims.

What is claimed is:

1. A locking mechanism for a firearm having a stock, a trigger mechanism, a receiver positioned along an upper side of said stock and having an aperture in a lower wall thereof and a bolt housed within said receiver and reciprocatable therein, said locking mechanism comprising;

a lock sleeve positioned vertically in said stock forward of said trigger assembly and below said receiver, said lock sleeve having means to retain said sleeve within said stock, and

a lock body permanently retained in said lock sleeve and having means adapted to protrude through said aperture in said receiver to releasably engage said bolt;

wherein, said lock body comprises a cylindrical lock shell, a key actuated tumbler rotatable within said shell and having a keyway accessible from one end of said tumbler and a lock cam extending from the opposite end of said tumbler, whereby insertion of a key into said keyway permits rotation of said tumbler within said shell between a locked position and an unlocked position and concurrent rotation of said lock cam between a locked position and an unlocked position,

said bolt is provided with a slot capable of being positioned over said receiver aperture and of receiving said lock cam, and

wherein said receiver aperture and said lock cam have corresponding irregular shapes whereby said cam is capable of passing through said aperture only when in rotational alignment therewith and whereby said rotational alignment corresponds to the unlocked position of said tumbler mechanism,

whereby said bolt is maintained in an inoperative position when said lock body is engaged.

2. The locking mechanism of claim 1 wherein said means to retain said sleeve within said stock comprises fasteners inserted through said sleeve into said stock.

3. The locking mechanism of claim 1 wherein said means to retain said sleeve within said stock comprises detents on the outer surface of said sleeve which engage said stock upon insertion of said sleeve therein and which prevent withdrawal of said sleeve from said stock.

4. The locking mechanism of claim 1 wherein said lock body is vertically slidable within said lock sleeve and further comprises a compression spring positioned within said lock sleeve between said lock body and the underside of said receiver and encircling said lock cam, whereby said spring urges said lock body downward whereby said lock cam is forced out of engagement with said receiver and said bolt when said tumbler is rotated to the unlocked position.

5. The locking mechanism of claim 4 further comprising an indexing means whereby said lock sleeve and said lock body are maintained in relative operating engagement, rotation of said lock shell relative to said sleeve is prevented and said lock body is prevented from being removed from said lock sleeve without first dismantling said receiver from said stock.

6. The locking mechanism of claim 5 wherein said indexing means comprises a tab extending laterally from said lock shell and a cooperating blind slot in said lock sleeve.

7. The locking mechanism of claim 6 wherein said blind slot is located in an upper portion of said lock sleeve and extends downward from the upper edge of said sleeve a distance sufficient to permit said lock body to fully retract from engagement with said bolt and said receiver when said tumbler mechanism is unlocked.

8. The locking mechanism of claim 1 further comprising indicia on said lock body and said lock sleeve whereby said locked and said unlocked positions are indicated.

PR 0292

ET50470

9. The locking mechanism of claim 1 wherein said receiver aperture comprises a substantially L-shaped cut-out wherein a first leg is transverse to the longitudinal axis of said receiver and a second leg is parallel to the longitudinal axis of said receiver.

10. The locking mechanism of claim 9 wherein said lock cam comprises a first leg extending laterally from said tumbler, a transition piece extending upward from the end of said first leg and a second leg extending parallel to said first leg, whereby said lock cam has a substantially C-shape and whereby said second leg engages and traverses said receiver aperture.

11. The locking mechanism of claim 10 further comprising an indexing means whereby said lock sleeve and said lock body are maintained in relative operating engagement, rotation of said lock shell relative to said sleeve is prevented and whereby said lock body is prevented from being removed from said lock without first dismantling said receiver from said stock.

12. The locking mechanism of claim 11 wherein rotation of said tumbler and said lock cam is restricted to an arc between full locked and full unlocked positions.

13. The locking mechanism of claim 12 wherein rotation of said tumbler and said lock cam is restricted to an arc of 45°.

14. The locking mechanism of claim 11 wherein said indexing means comprises a tab extending laterally from the upper edge of said lock shell and a cooperating blind slot in said lock sleeve.

15. A firearm comprising:

a stock having an upper surface and a lower surface and housing a trigger mechanism,

a receiver attached to said upper surface of said stock and capable of receiving ammunition and having an aperture in a lower wall thereof,

a firing bolt reciprocatingly housed in said receiver and actuatable by said trigger mechanism and having a blind hole therein which hole is indexable with said receiver aperture, and

a non-removable lock mechanism permanently mounted in said stock forward of said trigger mechanism and below said receiver and in line with said receiver aperture,

whereby said lock mechanism extends from said lower surface to said upper surface of said stock and comprises means to releasably engage said blind hole in said bolt through said receiver aperture to thereby lock said bolt at a point midway in its reciprocating motion within said receiver.

16. The firearm of claim 15 wherein said lock mechanism comprises:

a cylindrical sleeve permanently mounted through the lower surface of said stock and providing a passageway from said lower surface to the underside of said receiver in line with the aperture in said receiver, and

a lock body retained and operable within said sleeve between a locked position and an unlocked position and comprising a cylindrical lock shell housing a rotatable lock tumbler, said tumbler having a lock cam extending therefrom which, when said lock body is placed in the locked position, passes through said aperture in said receiver and engages said blind hole in said bolt.

17. The firearm of claim 16 wherein said lock sleeve comprises a cylindrical sleeve wall having an outwardly extending peripheral flange about the bottom edge thereof, a blind slot extending downward from the upper edge thereof and retention means to hold said sleeve within said stock.

18. The firearm of claim 17 wherein said cylindrical lock shell is of a size to slidably fit within said lock sleeve and includes means to engage said blind slot whereby said shell is retained within said lock sleeve and is prevented from rotating relative to said lock sleeve and wherein said lock tumbler is rotatable within said lock shell between locked and unlocked positions whereby said lock cam thereon is rotatable between locked and unlocked positions.

19. The firearm of claim 18 wherein said receiver aperture and said lock cam have corresponding irregular shapes whereby said cam is capable of passing through said aperture only when in rotational alignment therewith and whereby said rotational alignment corresponds to the unlocked position of said tumbler.

20. The firearm of claim 19 further comprising a spring positioned between said lock body and said receiver whereby said lock body is urged downward by said spring and out of engagement with said receiver and said bolt when said tumbler is rotated to said unlocked position.

21. The firearm of claim 18 wherein said lock cam comprises a substantially C-shaped member extending laterally from the upper end of said tumbler and wherein said receiver aperture comprises a substantially L-shaped cut-out with one arm of said L transverse to the longitudinal axis of said receiver and the other arm of said L parallel to the longitudinal axis of said receiver, whereby rotation of said tumbler causes said cam to traverse said aperture between of said lock body, whereby said firearm is locked when said cam traverses said transverse arm and said firearm is unlocked when said cam traverses said parallel arm.

22. A method of locking a firearm against use by unauthorized individuals wherein the firearm comprises a stock, a trigger mechanism in said stock, a receiver mounted on the upper surface of said stock and a bolt reciprocatingly housed within said receiver, the method comprising:

providing a vertical aperture in said stock forward of said trigger mechanism and extending from the underside of said stock upwards to said receiver and which is adapted to receive a non-removable lock mechanism permanently mounted therein,

providing an aperture in the wall of said receiver whereby said aperture is in line with said stock aperture and is adapted to permit passage of a lock element therethrough,

providing a blind hole in said bolt whereby said blind hole is alignable with said receiver aperture and said stock aperture and is adapted to receive said lock element, and

permanently mounting said lock mechanism within said stock aperture wherein said lock mechanism comprises a cylinder lock comprising said lock element telescopically extendable through said receiver aperture and receivable within said blind hole in said bolt whereby said bolt is releasably fixed against movement within said receiver.

23. The method of claim 22 comprising partially drawing said bolt to align said blind hole with said receiver aperture, extending said lock element through said receiver aperture and into said blind hole, locking said lock mechanism whereby said lock element is fixed in place within said blind hole, and releasing said bolt, whereby said bolt is retained in position and is prevented from reciprocating within said receiver and whereby said firearm is prevented from being loaded and from being discharged until said lock mechanism is released and whereby said bolt is prevented from being

PR 0293

ET50471

fully drawn for removal from said receiver until said lock mechanism is released.

24. The method of claim 23 further comprising providing means to cause said lock element to retract from said blind hole and said receiver aperture when said lock mechanism is unlocked.

25. A kit for retrofitting a locking mechanism to a firearm having a stock housing a trigger mechanism, a receiver mounted on the upper surface of said stock and a bolt housed within said receiver for reciprocating movement therein, wherein the kit comprises:

a replacement receiver having an aperture cut into the lower wall thereof,

a replacement bolt having a blind hole formed in the lower surface thereof and corresponding substantially to the shape and size of the receiver aperture,

a lock mechanism for implantation into the stock below the receiver and at a point corresponding to the receiver aperture, and

a template positionable on the stock to indicate the location for drilling an aperture in said stock to accommodate the lock mechanism.

26. The kit of claim 25 wherein the template is configured to align with a standard and existing part of the firearm whereby the location of the aperture in the stock for the lock mechanism may be properly located relative to the aperture in the replacement receiver.

27. The kit of claim 25 wherein the lock mechanism comprises a cylinder lock having a lock body telescopically extendable within a lock sleeve and a bolt engaging element on the inner end of said lock body whereby said lock body is extendable within said sleeve whereby said bolt engaging element passes through said receiver aperture and is receivable in said blind hole upon extension of said lock body.

28. The kit of claim 27 further comprising a biasing means on said lock body whereby said lock body is urged to telescopically retract into said lock sleeve when said lock mechanism is unlocked.

29. The kit of claim 25 wherein the lock mechanism comprises a cylinder lock having a lock body within a lock sleeve adapted to be fixedly mounted within said aperture in said stock wherein said lock body comprises a non-rotatable lock shell and a rotatable and lockable tumbler wherein said tumbler includes a locking member capable of traversing said receiver aperture and engaging or disengaging said bolt when said tumbler is rotated between locked and unlocked positions.

* * * * *

PR 0294

ET50472

US005467550A

United States Patent [19]

Mumbleau

[11] Patent Number: 5,467,550

[45] Date of Patent: Nov. 21, 1995

[54] PASSIVE SAFETY MECHANISM FOR FIREARMS

[76] Inventor: Dean W. Mumbleau, 14841 Pine View Dr., Becker, Minn. 55308-9212

[21] Appl. No.: 159,001

[22] Filed: Nov. 29, 1993

[51] Int. Cl.[6] F41A 17/02

[52] U.S. Cl. 42/70.11

[58] Field of Search 42/70.08, 70.11, 42/70.02, 7

[56] References Cited

U.S. PATENT DOCUMENTS

3,673,725	7/1972	Cravener .	
3,882,622	5/1975	Perotto	42/70.11
4,014,123	3/1977	Williams .	
4,136,475	1/1979	Centille .	
4,384,420	5/1983	Von Muller .	
4,532,729	8/1985	Von Muller	42/70.11
4,590,697	5/1986	Ruger et al.	42/70.08
4,726,136	2/1988	Dormans et al.	42/70.08
4,763,431	8/1988	Allan et al. .	
4,768,302	9/1988	Beretta	42/70.08
4,987,693	1/1991	Brooks	42/70.11
5,090,148	2/1992	Brooks .	
5,140,766	8/1992	Brooks .	
5,245,776	9/1993	Dormans	42/70.08

OTHER PUBLICATIONS

Smith & Wesson Centerfire Pistol Exploded View Diagram. 1993 Smith & Wesson Products for Law Enforcement Catalog.

Primary Examiner—Charles T. Jordan
Attorney, Agent, or Firm—Philip G. Alden

[57] ABSTRACT

A passive safety mechanism is shown installed in a semi-automatic pistol. The passive safety mechanism includes a cylindrical body rotatably mounted within the slide assembly which may be rotated between an engaged position and a disengaged position using a key inserted into a keyway in the exposed axial end of the cylindrical body. In the engaged position, a portion of the body blocks the hammer assembly from contacting the firing pin, and a circumferential surface depresses the ejector and magazine depressor lever and firing pin safety lever. Rotation of the cylindrical body within the slide assembly is prevented or resisted through friction and spring tension created by a spring-biased pin carried in a transverse bore in the cylindrical body and riding within a channel in the slide assembly. One or both of the axial ends of the cylindrical body may be recessed from the sides of the slide assembly, polished to further prevent or evidence tampering, and the axial end opposing the keyway may optionally be covered. The semi-automatic pistol thereby has no manual safety lever.

14 Claims, 4 Drawing Sheets

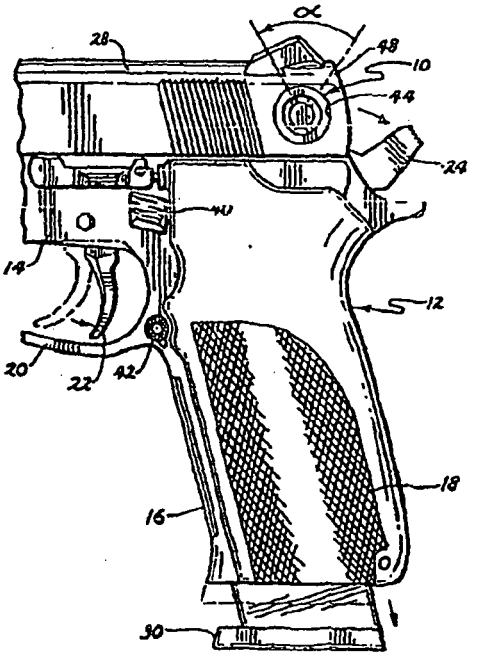

PR 0296

ET50474

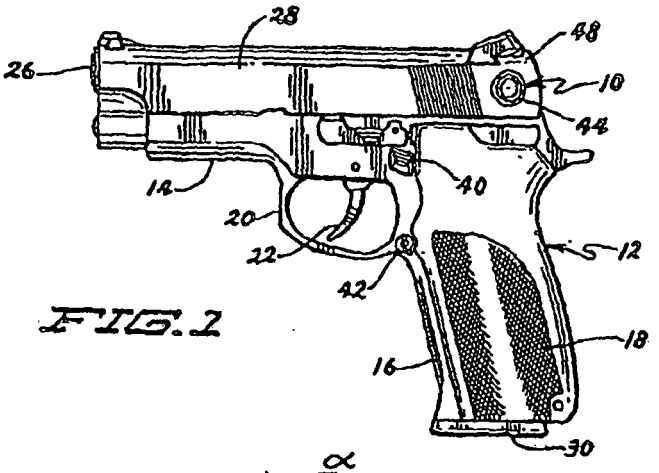

FIG. 1

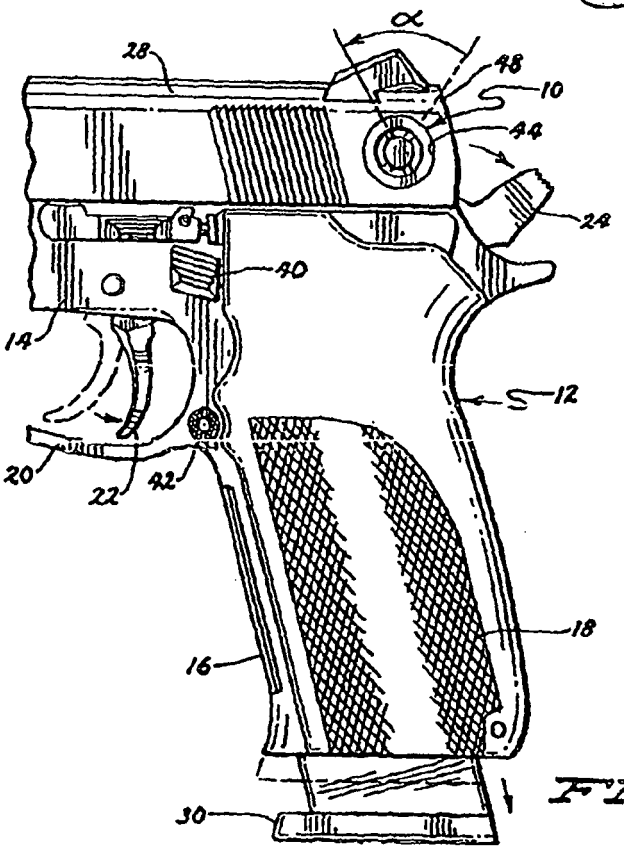

FIG. 2

PR 0297

ET50475

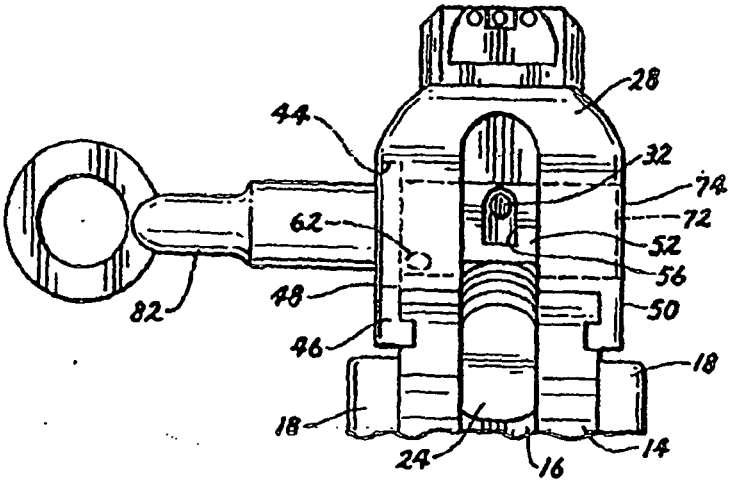

FIG. 3

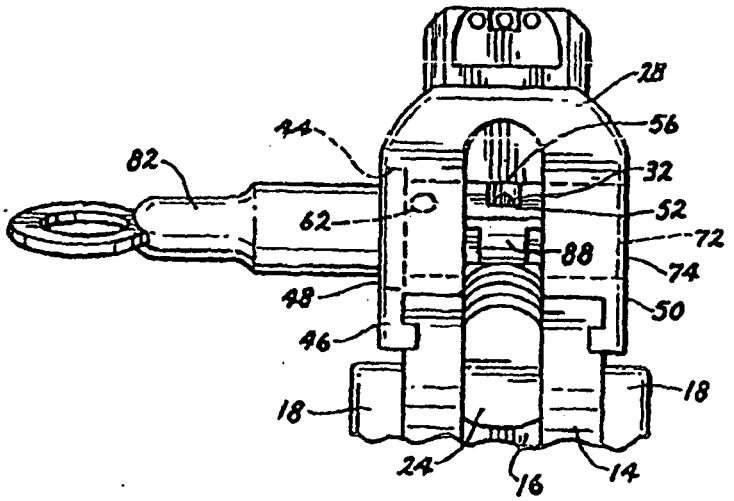

FIG. 4

PR 0298

ET50476

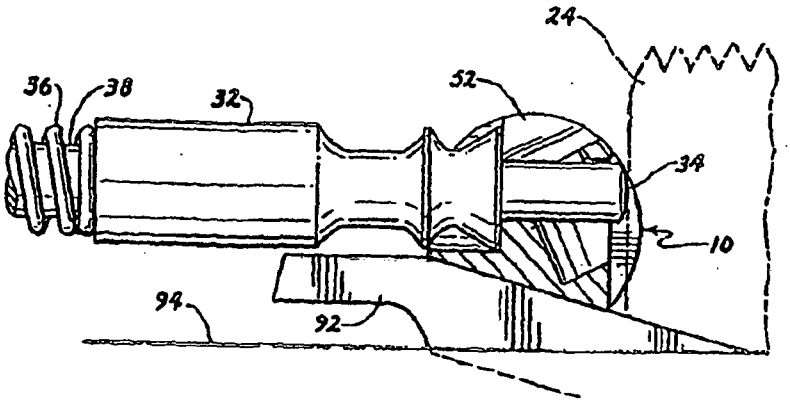

FIG. 5

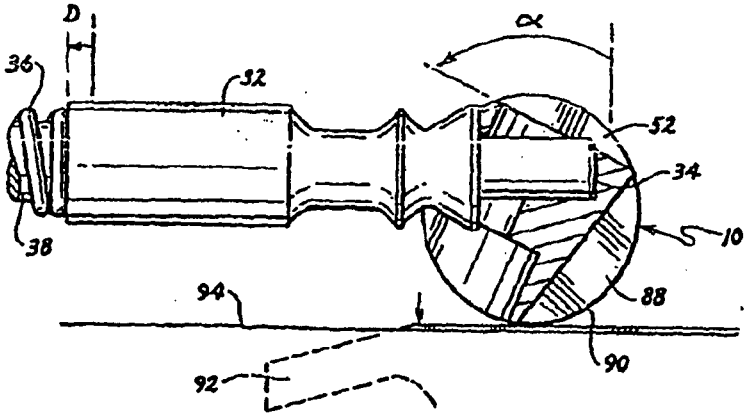

FIG. 6

PR 0299

ET50477

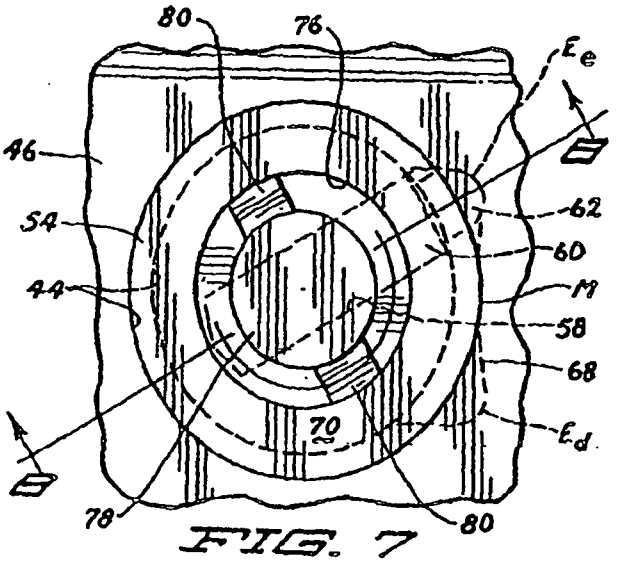

FIG. 7

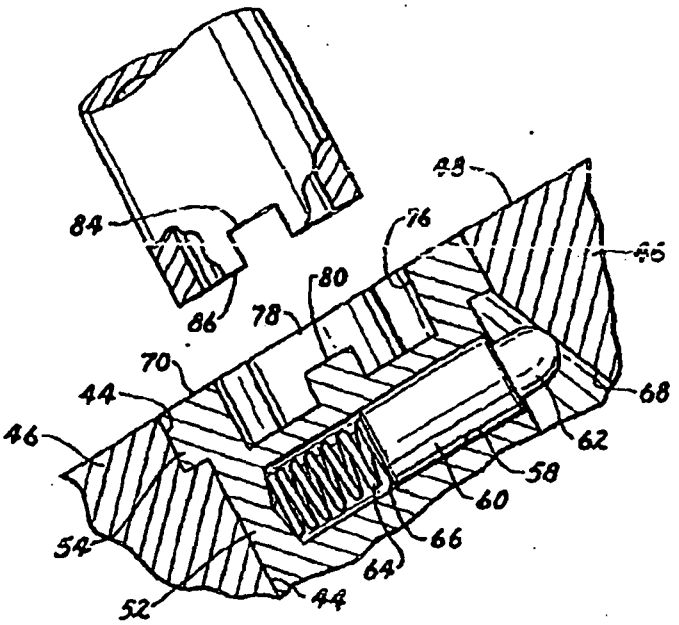

FIG. 8

PR 0300

ET50478

PASSIVE SAFETY MECHANISM FOR FIREARMS

BACKGROUND OF THE INVENTION

1. Field of the Invention

This invention relates generally to devices for preventing the accidental or unintentional discharge of a firearm, and particularly to a passive safety mechanism that provides a locking capability.

2. Prior Art

Various types of active locking mechanisms for firearms are known. These mechanisms include: (1) bore locks which require the insertion of a lockable bar through the bore or barrel of the firearm, (2) trigger guard locks that enclose the trigger guard area to prevent insertion of a finger or block rearward movement of the trigger itself, and (3) frame-mounted locks which integrate an active locking mechanism into one or more operations of the firearm, such as the manual safety, hammer drawback or drop, or magazine insertion.

Representative examples of various frame-mounted active locking mechanisms are shown in U.S. Pat. Nos. 3,673,725 to Cravener; 3,882,622 to Perlotto; 4,014,123 to Williams; 4,136,475 to Centille; 4,384,420 and 4,532,729 to Von Muller; 4,763,431 to Allan; and 5,140,766; 5,090,148; and 4,987,693 to Brooks.

The Perlotto '622 patent discloses a locking mechanism particularly suited for semi-automatic pistols incorporating a hammer-blocking manual safety and a manual de-cocking mechanism, although that reference does not discuss the structure and operation of the "shaft" on which the manual safety lever is carried in relation to its functions in retaining the firing pin, blocking the hammer from contacting the firing pin when the manual safety is "on," interrupting the trigger pull or hammer release mechanisms, and preventing manual insertion or release of the magazine.

The Perlotto '622 active locking mechanism is operated utilizing a key which acts to rotate a cam that has an arcuate circumferential surface aligned with one half of the face of a spring-biased retractable pin. The cam has an angularly-oriented face which defines an orthogonal notch or recess facing the closely confronting end of the shaft and opposing the keyway. (The keyway therefore opposes the thumb-actuated safety lever relative to the frame of the semi-automatic pistol.) The interface between that cam and the confronting end of the shaft is aligned generally along the longitudinal axis of that retractable pin, with one half of that retractable pin being received within a groove or locking recess formed in the semi-circular projection extending from the end of the shaft confronting the cam, and the remaining half of the retractable pin being received within the orthogonal notch. Rotation of the key and cam through a quarter revolution (90°) to the "unlocked" position causes the angularly-oriented face of the cam to depress the retractable pin into the aligned bore in the frame to a point where the face of the retractable pin is at least flush with or spaced apart from the circumferential surface of the shaft on which the manual safety lever is mounted. The manual safety lever may then be pivoted to its "off" position, thus allowing a round of ammunition to be chambered from the magazine and the pistol to be fired. Depressing the retractable pin thereby pushes the retractable pin out of the locking recess to prevent that pin from obstructing the rotation of the shaft, and the manual safety lever can be pivoted back and forth to disengage or engage the safety as desired until the cam is

subsequently rotated to the "locked" position, releasing the retractable pin into the locking recess and obstructing the rotation of the shaft and movement of the manual safety lever. Rotation of the cam to the "locked" position also disposes one surface of the orthogonal notch to a mating position with the corresponding surface on the projecting end of the shaft, further preventing rotation of the shaft.

The Perlotto '622 active locking mechanism does present several noteworthy limitations and drawbacks. First, although Perlotto '622 does constitute an active locking mechanism, the extension from the cam which the key engages is exposed through the keyway and can easily be manipulated or rotated by a person using a pliers, screwdriver, allen wrench, or similar tool depending upon the cross-sectional shape of the extension. As such, the Perlotto '622 locking mechanism is especially susceptible to circumvention or unauthorized use, and the exposed extension invites curiosity.

Perlotto '622 depicts a right-handed embodiment of the active locking mechanism. The keyway must necessarily be disposed on the opposite side of the frame from the thumb-actuated safety lever, thereby placing the keyway on the opposite side of the pistol from the shooter's free left hand. In order to place the key in the keyway and rotate the cam using the left hand while still gripping the pistol in the shooting hand, the pistol must be turned over (thus reversing the orientation for the conventional rotation of the key and lock) or inwardly toward the shooter's torso. These motions require extensive practice to perform smoothly, and can be time-consuming and dangerous in an emergency or life-threatening situation where a person may not think clearly or react calmly. The alternative is to shift the pistol to the non-shooting hand, which is again time consuming and dangerous for a person who lacks the proper training or is involved in an emergency or life-threatening situation.

Moreover, once the active locking mechanism has been disengaged, the firearm is returned to its normal mode of operation and is rendered equivalent to a firearm without a locking mechanism. A person is therefore as apt to engage the manual safety and set the firearm down, or place the firearm in storage without engaging the active locking mechanism, as they would be with a conventional firearm lacking any locking mechanism. To overcome this disadvantage, the active locking mechanism could be modified to lock the firearm each time the manual safety is engaged. However, a person might accidentally or unintentionally engage the manual safety in a situation where the firearm might be needed imminently, and the unlocking operation would then need to be repeated before the firearm could be fired.

The Perlotto '622 active locking mechanism also requires a retaining cap to enclose the elements of the locking mechanism that extend outwardly beyond the side of the slide assembly or frame. This requires either an extensive modification to the slide assembly design or else welding a cap over the locking mechanism, since a threaded cap and aperture could easily be removed to circumvent the locking mechanism.

Finally, the prevailing trend in the manufacture of semi-automatic pistols is to utilize an ambidextrous manual safety, and in many models an integrated de-cocking mechanism. However, the Perlotto '622 active locking mechanism requires that the slide assemblies and manual safeties be completely redesigned and re-tooled for each model of firearm incorporating the locking mechanism. Distinct frames, slide assemblies, and safeties must be fabricated for

PR 0301

ET50479

right- and left-handed firearms, and the orientation of the cam and shaft surfaces would also need to be reversed if the manual safety is disposed on the opposite or left-handed side of the firearm. This greatly increases the cost and complexity of manufacturing and implementing the Perlotto '622 locking mechanism in commercial firearms.

Moreover, the shaft on which the manual safety lever is carried in many semi-automatic pistols is the firing pin retainer, which has surfaces or detents which engage and interact with the firing pin safety lever and the ejector/magazine depressor lever, none of which are shown or discussed in Perlotto '622. Consequently, due to the placement of the firing pin safety lever and the ejector/magazine depressor lever, the Perlotto '622 locking mechanism could not be incorporated into both left- and right-handed firearms of this type without effectively creating two separate "mirror-image" firearms.

In any event, the Perlotto '622 design could not be incorporated into many of these modern semi-automatic pistols because insufficient space is permitted to place the cam and retractable pin in the area of the firing pin retainer. The thin walls of conventional slide assemblies do not permit a bore to be machined to hold the spring and retractable pin while still maintaining the integrity of the slide assembly, and many models of semi-automatic pistols utilize a larger diameter firing pin that consumes most of the free space in the rear block of the slide assembly. The location of the firing pin safety lever and the ejector/magazine depressor lever also prevents the cam and retractable pin from being placed on either side of the firing pin in many semi-automatic pistols.

BRIEF SUMMARY OF THE INVENTION

It is therefore one object of this invention to design a passive safety mechanism for firearms such as semi-automatic pistols which may be incorporated into existing firearm designs without modification of the frames, slide assemblies, or other functional elements of the firearm associated with the chambering mechanisms, firing mechanisms, or ejector mechanisms.

It is a related object of this invention to design the above passive safety mechanism such that it is slide-mounted and may be contained wholly within the existing boundaries of the slide assembly of a semi-automatic pistol.

It is another object of this invention to design the above passive safety mechanism so that it may not be operated manually by a person using their thumb or their thumb and forefinger, but rather requires a key or other actuating device.

It is a distinct object of this invention to design the above passive safety mechanism such that it resists or prevents tampering or circumvention, and will evidence attempts to tamper with or circumvent the passive safety mechanism by an unauthorized user.

It is yet another object of this invention to design the above passive safety mechanism such that the magazine of an semi-automatic pistol equipped with the passive safety mechanism cannot be inserted into an engaged position when the passive safety mechanism is engaged, and further such that a round cannot be stripped from the magazine and chambered by action of the slide assembly when the passive safety mechanism is engaged.

It is yet another object of this invention to design the above passive safety mechanism such that it may be manufactured in a cost effective manner, and permit ambidextrous use without increasing the cost of manufacture.

Briefly described, the preferred embodiment of the passive safety mechanism of this invention comprises a cylindrical body rotatably mounted within the slide assembly of a semi-automatic pistol which may be rotated between an engaged position and a disengaged position using a key inserted into a keyway in the exposed axial end of the cylindrical body. In the engaged position, a portion of the body blocks the hammer assembly from contacting the firing pin, and a circumferential surface depresses the ejector and magazine depressor lever and firing pin safety lever. Rotation of the cylindrical body within the slide assembly is not prevented by an active locking mechanism, however it is resisted by friction and spring tension created by a spring-biased pin carried in a transverse bore in the cylindrical body and riding within a channel in the slide assembly. One or both of the axial ends of the cylindrical body may be recessed from the sides of the slide assembly, polished to further prevent or evidence tampering, and the axial end opposing the keyway may optionally be covered. The semi-automatic pistol thereby has no manual safety lever which may be operated by the user.

BRIEF DESCRIPTION OF THE DRAWINGS

FIG. 1 is a side elevation view of a semi-automatic pistol as further described in the specification incorporating the passive safety mechanism of this invention in the disengaged position;

FIG. 2 is a detail view of rear portion of the semi-automatic pistol of FIG. 1 showing the passive safety mechanism in the engaged position;

FIG. 3 is a rear elevation view of the top portion of the semi-automatic pistol of FIG. 1 showing the passive safety mechanism in the disengaged position;

FIG. 4 is a rear elevation view of the top portion of the semi-automatic pistol of FIG. 1 showing the passive safety mechanism in the engaged position;

FIG. 5 is a partially broken away cross section view of the semi-automatic pistol of FIG. 1 and the passive safety mechanism in the disengaged position;

FIG. 6 is a partially broken away cross section view of the semi-automatic pistol of FIG. 1 and the passive safety mechanism in the engaged position;

FIG. 7 is a side elevation detail view of the passive safety mechanism installed in the semi-automatic pistol of FIG. 1; and

FIG. 8 is a partially broken away cross-sectional view of the passive safety mechanism taken through line 8—8 in FIG. 7.

DESCRIPTION OF THE PREFERRED EMBODIMENTS

The passive safety mechanism for firearms of this invention are shown in FIGS. 1–8 and referenced generally therein by the numeral 10.

The passive safety mechanism 10 is shown for reference and descriptive purposes installed in a semi-automatic pistol 12. Although many types of firearms, handguns, or pistols are suitable for use with or may be modified to accommodate the passive safety mechanism 10, a Smith & Wesson Model 1076 10 mm. semi-automatic pistol 12 is shown as a representative example of the manner and best mode contemplated for utilizing the passive safety mechanism 10 as described herein.

PR 0302

ET50480

Referring particularly to FIGS. 1–3, it may be seen that the semi-automatic pistol 12 includes a frame 14 defining a butt or handgrip region 16 covered on both sides by wood or polymer handgrips 18. The frame 14 defines a trigger guard 20 disposed in front of the handgrip region 16, and protecting a trigger assembly 22 that is pivotally mounted within the frame 14 and movable between a rest position as shown in FIG. 1 and a firing position as shown in FIG. 2. It will be understood by those of skill in the art that the trigger assembly 22 is operatively connected by a series of internal mechanisms (not shown) to a hammer assembly 24 positioned at the rear of the frame 14. The hammer assembly 24 is pivotally mounted within the frame 14 and spring-biased to move between a cocked or ready position as shown in FIG. 2 and a firing or rest position as shown in FIG. 1 in response to the trigger 22 being retracted completely to the firing position.

The semi-automatic pistol 12 may be fired or discharged in one of two ways. A round of ammunition (not shown) is chambered at or within the rear or breach end of the barrel 26 by retracting the slide assembly 28 rearwardly along the frame 14 and then forwardly to strip the round from the top of the clip or magazine 30 and dispose that round within the enclosed firing chamber at the breach end of the barrel 26. The process of chambering the round also draws the hammer assembly 24 rearwardly to the cocked position, at which point the hammer assembly is caught and held by a sear (not shown) while the slide assembly 28 returns to the normal position as shown in FIG. 2. The trigger assembly 22 can then be manually retracted (or "squeezed") until the trigger assembly 22 reaches the firing position, at which point the sear releases the hammer assembly 24 and the hammer assembly 24 pivots forward and strikes the firing pin 32 along its rear face 34. The firing pin 32 is slidably carried within the frame 14 and is spring-biased rearwardly by a compression spring 36. However, the force of the hammer assembly 24 striking the rear face 34 of the firing pin 32 is sufficient to overcome the spring force of the compression spring 36 and propel the firing pin 32 forward until the front section 38 strikes the primer (not shown) in the rear of the round to cause the round to fire. The force of the round discharging serves to propel the round's projectile through the barrel 26 and also drives the slide assembly 28 rearwardly to eject the spent cartridge from the chamber and strip a second round of ammunition from the magazine 30, cock the hammer assembly 24, and place the semi-automatic pistol 12 in position to fire that second round.

Alternately, once the semi-automatic pistol 12 has been cocked by retracting the slide assembly 28 as described above, the semi-automatic pistol 2 may be decocked by pressing the pivotally-mounted and spring-biased decocking lever 40 downwardly, thus causing a decocking mechanism (not shown) to release the sear and controllably lower the hammer assembly 24 toward the slide assembly 28 and firing pin 32. In some semi-automatic pistols 12 such as that shown in FIG. 1, the decocking mechanism lowers the hammer assembly 24 only to a partially cocked or stopped position and prevents contact between the hammer assembly 24 and firing pin 32, with the hammer assembly 24 being manually dropped to the rest position within the rear of the slide assembly 24 by placing rearward tension on the hammer assembly 24 and retracting the trigger assembly 22 slightly.

From this rest position, the semi-automatic pistol 12 of the double-action type may be fired by manually squeezing or retracting the trigger assembly 22 to draw the hammer assembly 24 rearwardly against the spring tension until the trigger assembly 22 reaches the firing position, at which point the sear releases the hammer assembly 24 and the hammer assembly 24 similarly pivots forward and strikes the firing pin 32 to discharge the round in the chamber.

The magazine 30 may be released and withdrawn from the butt or handgrip region 16 of the frame 14 by depressing a spring-biased magazine catch 42 disposed directly behind the trigger guard 20. The magazine 30 can then be slidably removed from within the handgrip region 16, loaded with additional rounds of ammunition, and slidably inserted into its recess within the handgrip region 16 until the magazine catch 42 engages and holds the magazine 30 in position.

Other features and mechanisms of the semi-automatic pistol 12 will be apparent from the description of the structure and operation of the passive safety mechanism 10 which follows, however such features and mechanisms are within the basic understanding of one of ordinary skill in the art, and the incorporation of the passive safety mechanism 10 of this invention into other semi-automatic pistols 12, handguns, or firearms having features or mechanisms which differ structurally or functionally from those described herein may be readily appreciated by those skilled in the art.

Referring particularly to FIGS. 1–4, the passive safety mechanism 10 is shown mounted or installed within the slide assembly 28 of the semi-automatic pistol 12 at the rear end thereof, and closely proximate to the front of the hammer assembly 24. It will be readily appreciated by those skilled in the art that the passive safety mechanism 10 is received within a pair of circular apertures 44 defined in each side wall of the slide assembly 28 normally disposed for receiving the firing pin retainer, and the passive safety mechanism 10 extends substantially between the two opposing sides 48, 50 of the slide assembly 28 and is rotatably mounted therein in substantially the same manner as the firing pin retainer. In the case of a conventional semi-automatic pistol 12 not incorporating the passive safety mechanism 10, one or both ends of the firing pin retainer would be fitted with or define manual safety levers (not shown), with one manual safety lever being disposed on each side of the slide assembly 28 and handgrip region 16 in the case of an ambidextrous manual safety. The manual safety levers are manually pivoted by the user's thumb to rotate the firing pin retainer transversely within the slide assembly 28 to actively engage or disengage the manual safety function of the semi automatic pistol 12.

Referring to FIGS. 1–4, 7, and 8, it may be seen that the passive safety mechanism 10 defines a generally cylindrical body 52 with an outwardly projecting annular collar 54 at one end thereof which is matingly received within the aperture 44 of the side wall 46 of the slide assembly 28, thus requiring that the passive safety mechanism 10 be installed through the aperture 44 from that side 48 of the slide assembly 28.

The body 52 of the passive safety mechanism 10 defines a central aperture 56 having a generally rectangular shape with a semi-circular top, the central aperture 56 extending completely through the diameter of the body 52 and defining a passage through which the rear face 34 of the firing pin 32 extends and may be contacted by the hammer assembly 24, as shown particularly in FIGS. 3 and 5.

The body 52 of the passive safety mechanism 10 further defines a bore 58 disposed closely adjacent to the annular collar 54 and extending partially through the diameter of the body 52, the bore 58 slidably receiving a pin 60 having a rounded head 62 and biased radially outward from the body 52 by a compression spring 64 disposed within the bore 58

PR 0303

ET50481

and received within the base 66 of the pin 60.

The rounded head 62 of the pin 60 extends and is biased outwardly into contact with the surface of a generally square-cornered recess or channel 68 defined by and extending into the rear surface of the side wall 46 of the slide assembly 28, and therefore communicating with the aperture 44 and closely confronting the cylindrical surface of the body 52 of the passive safety mechanism 10. It may be readily appreciated by those of ordinary skill in the art that the pin 60, spring 64, and channel 68 are of the same type, placement, orientation, and configuration as those provided for the manual safety plunger and spring in a conventional semi-automatic pistol 12 not incorporating the passive safety mechanism 10, with the exception of the optional modifications described in greater detail herein.

Referring to FIGS. 7 and 8, it may be seen that the channel 68 defines an angularly oriented surface contacting the rounded head 62 of the pin 60, and is located and oriented such that the surface is tangential or more closely adjacent to the peripheral edge or circumference of the body 52 of the passive safety mechanism 10 at or near the midpoint M thereof, and is deeper or more distantly displaced from peripheral edge or circumference of the body 52 at the opposing ends E_1, E_2 thereof.

Referring again to FIGS. 1–4, 7, and 8, the body 52 of the passive safety mechanism 10 has a first axial end 70 disposed substantially flush with one side 48 of the slide assembly 28, and a second axial end 72 disposed substantially flush with other side 50 of the slide assembly 28. One or both of the axial ends 70, 72 may optionally be recessed slightly into the interior of the slide assembly 28 from the corresponding sides 48, 50 of the slide assembly 28 as shown with reference to the second axial end 72 in FIGS. 3 and 4, in order to further mitigate against any unauthorized use, tampering with, or circumvention of the passive safety mechanism 10. The second axial end 72 may optionally be enclosed by the corresponding side wall 46 of the slide assembly 28, or by a separate cap 74 which extends across and encloses the aperture 44 in the corresponding side wall 46 of the slide assembly 28 in covering relation to the second axial end 72 of the body 52 of the passive safety mechanism 10.

The body 52 of the passive safety mechanism 10 further defines a generally circular concentric keyway 76 extending longitudinally into the first axial end 70 of the body 52 generally parallel with and circumscribing the longitudinal axis or axis of rotation of the body 52 and perpendicular to the first axial face 70. The concentric keyway 76 further defines a central post 78 having a circular cross-section extending longitudinally outward from the body 52 and aligned with the longitudinal axis thereof, and a pair of generally rectangular cross-section flanges 80 extending between the central post 78 and the concentric keyway 76 and diametrically opposed to one another. In a retrofit embodiment of the passive safety mechanism 10, the concentric keyway 76 and central post 78 were formed by machining an annular groove into the first axial face 70 of the body 52, and the flanges 80 were formed by drilling a circular bore transversely through the body 52 and intersecting the annular groove and central post 78 with a rod having three rectangular surfaces cut corresponding to the flanges 80 inserted through the bore so that the rectangular surfaces are disposed within the concentric keyway 76. For production of non-retrofit embodiments, the entire concentric keyway 76, central post 78, and flanges 80 may be machined into the first axial face 70 of the body using an EDM or similar machining process.

A hollow cylindrical or tubular key 82 or other actuating device having a gripping portion and an inner and outer diameter corresponding to the diameter of the concentric keyway 76 and central post 78, respectively, defines a pair of generally rectangular notches 84 aligned to receive and engage the pair of flanges 80 when the distal end 86 of the key 82 is inserted completely into the concentric keyway 76.

Clockwise rotation of the key 82 within the keyway 76 when the flanges 80 are engagingly received within the notches 84 causes clockwise rotation of the body 52 of the passive safety mechanism 10 within the slide assembly 28 through an angle α of approximately 65° between the safety or engaged position shown in FIGS. 2, 4, 6, and 7, and the firing or disengaged position shown in FIGS. 1, 3, and 5.

Referring particularly to FIG. 3–6, it may be seen that counter-clockwise rotation of the body 52 of the passive safety mechanism 10 from the disengaged position to the engaged position causes a semi-circular rear block 88 of the body 52 to be disposed operatively between the hammer assembly 24 and the rear face 34 of the firing pin 32 in separating relation thereto to prevent the hammer assembly 24 from being completely received within the slide assembly 28 and contacting the firing pin 32. Additionally, the body 52 of the passive safety mechanism 10 presses the firing pin 32 a short distance D forward as would normally occur when the manual safety of the semi-automatic pistol 12 were moved to the "on" position, and the cylindrical outer surface 90 of the body 52 of the passive safety mechanism 10 depresses the ejector and magazine depressor lever 92 and/or the firing pin safety lever 92 and slide assembly release (not shown) downwardly to a point flush with the top surface 94 of the frame 14 in the area beneath passive safety mechanism 10 and within the slide assembly 28, to thereby disable magazine catch 42 and the operative connection between the trigger assembly 22 and the sear or hammer assembly 24. (In FIGS. 5 and 6, the lever shown as reference numeral 92 may represent either the ejector and magazine depressor lever 92 or the firing pin safety lever 92 or both, which are normally disposed on opposing sides of the hammer assembly 22 and firing pin 32.)

The semi-circular rear block 88 of the body 52 is described as being "disposed operatively between" the hammer assembly 24 and the rear face 34 of the firing pin 32. In the embodiment shown in FIGS. 3–8 herein, at least a portion of the semi-circular rear block 88 of the body 52 is physically disposed between the hammer assembly 24 and the rear face 34 of the firing pin 32 to prevent firing. In alternate embodiments, a portion of the passive safety mechanism 10 may be operatively disposed between the hammer assembly 24 and the firing pin 32 in any manner that prevents the hammer assembly 24 from contacting the firing pin 32 without necessarily requiring physical interposition between those two elements, but rather by functionally blocking the hammer assembly 24 from the firing pin 32, or functionally disconnecting the hammer assembly 24 from the trigger assembly 22.

In operation, when the passive safety mechanism 10 is rotated to the disengaged position as shown in FIGS. 1, 3, and 5, the semi-automatic pistol 12 may be operated and fired by the user according to any procedure that is normally utilized.

In order to move the passive safety mechanism to the engaged position as shown in FIGS. 2, 4, and 6, the magazine catch 42 must be depressed and the magazine 30 at least partially removed from within the handgrip region 16 of the frame as shown in FIG. 2, and the distal end 86 of

PR 0304

ET50482

the key 82 must be inserted into the concentric keyway 76 until the notches 84 engage the flanges 80 of the passive safety mechanism 10 and is rotated counter-clockwise to the engaged position. This may be performed regardless of whether the hammer assembly 24 is in the cocked position, the rest position, or the partially cocked position, and will have no effect on the movement or positioning of the hammer assembly 24. When the passive safety mechanism 10 is rotated to the engaged position, the trigger assembly 22 cannot be retracted and will not affect the sear or hammer assembly 24, however the hammer assembly 24 may still be lowered to the partially decocked or fully decocked rest position using the decocking lever 40 and corresponding mechanism. Similarly, the slide assembly 28 may be retracted fully to cock the hammer assembly 24. Finally, when the passive safety mechanism 10 is rotated to the engaged position, the magazine 30 cannot be inserted completely into the interior of the handgrip region 16 of the frame 14 so that the magazine catch 42 engages and retains the magazine 30 with a round of ammunition in position to be chambered if the slide assembly 28 is fully retracted to cock the hammer assembly 24, thereby also preventing a round of ammunition from being chambered from the magazine 30 by operation of the slide assembly 28.

The key 82 may then be withdrawn from the concentric keyway 76 of the passive safety mechanism 10 and the passive safety mechanism 10 will remain in the engaged position and will resist rotation of the passive safety mechanism 10 due to the spring tension and frictional resistance caused by the pin 60 and spring 64. The friction and spring tension should be sufficient that a person could not normally grip the opposing first and second axial ends 70, 72 of the body 52 and manually rotate the passive safety mechanism 10, nor grip the substantially smooth axial ends 70, 72 using a pliers or similar tool and manually rotate the passive safety mechanism.

To fire or operate the semi-automatic pistol 12, the key 82 must be reinserted into the concentric keyway 76 and the passive safety mechanism 10 rotated to the disengaged position, whereat the magazine 30 may be inserted completely into the interior of the handgrip region 16 of the frame 14 so that the magazine catch 42 engages and retains the magazine 30, and the semi-automatic pistol 12 is thereafter fully operation for firing according to any procedure normally utilized.

Various modifications may be made to the passive safety mechanism 10 to further mitigate against tampering, unauthorized use, or circumvention of the passive safety mechanism 10 when in the engaged position, including deepening the engaged end E_e of the channel 68, modifying the shape of the rounded head 62 of the pin 60, increasing the spring constant of the compression spring 64, smoothing or polishing the second axial end 72 of the body 52 of the passive safety mechanism 10 in addition to recessing that second axial end 72, and fabricating a more complex configuration for the concentric keyway 76 and key 82 that does not present any exposed or visible flanges 80.

Other embodiments of or modifications to the passive safety mechanism 10 of this invention have been contemplated to be particularly useful or desired for certain applications. One example is a passive safety mechanism 10 in which the body 52 defines a groove in the rear block 88 which receives the ejector and magazine depressor lever 92 regardless of the rotational orientation of the passive safety mechanism 10 (but not the firing pin safety lever), thereby permitting a holstered semi-automatic pistol 12 to have the passive safety mechanism 10 engaged without removing the magazine 30 or disengaging the magazine catch 42.

The passive safety mechanism 10 shows the drawing figures is oriented for a right-handed shooter. For left-handed shooters or ambidextrous operation, the concentric keyway 76 need only be placed on the opposite or second axial end 72 of the body 52, or the body 52 may be equipped with two completely operational concentric keyways 76 at each of the first and second axial ends 70, 72 thereof.

For purposes readily apparent to one of ordinary skill in the art, it is understood that in this specification and the claims appended hereto the slide assembly 28 may be considered as one component of the frame 14, although the slide assembly 28 is more conventionally considered a separate and distinct component from the remainder of the frame 14.

While the preferred embodiments of the above passive safety mechanism 10 have been described in detail with reference to the attached drawing figures, it is understood that various changes and adaptations may be made in the passive safety mechanism 10 without departing from the spirit and scope of the appended claims.

What is claimed is:

1. In a firearm to be used by a person having a thumb and a forefinger, said firearm having a frame, a firing pin, and a hammer, said hammer being mounted on said frame for movement between a cocked position and a firing position in contact with said firing pin, the improvement comprising:

a passive safety mechanism, said passive safety mechanism having a body mounted on the frame, said body being movable between an engaged position and a disengaged position, at least a portion of said body being disposed operatively between the hammer and the firing pin when the passive safety mechanism is in the engaged position such that the hammer is prevented from contacting the firing pin, said passive safety mechanism having at least one surface exposed to the person and including a keyway; and

a key for actuating said passive safety mechanism, said key having an engaging portion configured so as to operatively mate with said keyway, said body being substantially free of and not operatively connected to a surface which may be gripped or engaged by the thumb or the forefinger or both of the person such that the person may not manually move said passive safety mechanism between said engaged position and said disengaged position except by use of said key,

whereby the person may engage the keyway of the passive safety mechanism with the key and move the passive safety mechanism between said engaged position and said disengaged position.

2. The passive safety mechanism of claim 1 wherein the body has a generally cylindrical shape including a first end and a second end, said first end defining the at least one surface exposed to the person and including the keyway, said first end and said second end being disposed on opposing sides of the frame of firearm.

3. The passive safety mechanism of claim 2 wherein the firearm is a semi-automatic pistol and the frame includes a slide assembly, and wherein the body is mounted for rotational movement on said slide assembly.

4. The passive safety mechanism of claim 3 wherein the first end of the body and the second end of the body are disposed on opposing sides of the slide assembly.

5. The passive safety mechanism of claim 4 wherein a portion of the second end of the body is exposed to the person.

PR 0306

ET50484

6. The passive safety mechanism of claim 5 wherein the portion of the second end of the body that is exposed to the person is substantially smooth.

7. The passive safety mechanism of claim 6 wherein the opposing sides of the slide assembly include a first side proximate to the first end of the body and a second side proximate to the second end of the body, and wherein the second end of the body is recessed from said second side of the slide assembly.

8. The passive safety mechanism of claim 1 wherein the body is mounted for rotational movement relative to the frame, and further including means for biasing the body against rotational movement.

9. The passive safety mechanism of claim 1 wherein the body is mounted for rotational movement relative to the frame and is spring-biased against rotational movement by a pin and a compression-type spring, the body defining a bore receiving said compression-type spring and at least a portion of said pin, said frame defining a channel, at least a second portion of said pin being biased toward and into contact with said channel by said compression-type spring, said channel being disposed such that rotational movement of the body relative to the frame presses said pin against said compression-type spring and further into said bore.

10. The passive safety mechanism of claim 9 wherein the spring-bias exerted on the body is sufficient to prevent the person from manually moving the passive safety mechanism from the engaged position to the disengaged position using the thumb or the forefinger or both.

11. The passive safety mechanism of claim 1 wherein the *firearm* has an *ejector* and magazine depressor lever pivotably mounted on the frame for movement between an operative position and an inoperative position, wherein said ejector and magazine depressor lever is pivotably depressed in said inoperative position relative to said operative position, and wherein the body engages and pivotably depresses said ejector and magazine depressor lever relative to the frame such that said ejector and magazine depressor lever is in said inoperative position when the body of the passive safety mechanism is moved to the engaged position.

12. The passive safety mechanism of claim 1 wherein the firearm has a firing pin safety lever pivotably mounted on the frame for movement between an operative position and an inoperative position, wherein the firing pin safety *lever* is pivotably depressed in said inoperative position relative to said operative position, and wherein the body engages and pivotably depresses said firing pin safety lever relative to the frame such that said firing pin safety lever is in said inoperative position when the body of the passive safety mechanism is moved to the engaged position.

13. A method for selectively preventing the firing of a firearm by a person having a thumb and a forefinger, said firearm having a frame, a firing pin, and a hammer, said hammer being mounted on said *frame for* movement between a cocked position and a firing position in contact with said firing pin, said method comprising the steps of:

providing the firearm with a passive safety mechanism, said passive safety mechanism having a body removably mounted on the frame, said body being movable between an engaged position and a disengaged position, at least a portion of said body being disposed operatively between the hammer and the firing pin when the passive safety mechanism is in the engaged position such that the hammer is prevented from contacting the firing pin, said passive safety mechanism having at least one surface exposed to the person and including a keyway; and

providing the person with a removable key for actuating said passive safety mechanism, said key having an engaging portion configured so as to operatively mate with said keyway, said body being substantially free of and not operatively connected to a surface which may be gripped or engaged by the thumb or the forefinger or both of the person such that the person may not manually move said passive safety mechanism between said engaged position and said disengaged position except by use of said key,

whereby the person may selectively engage the keyway of the passive safety mechanism with the key and move the passive safety mechanism between the engaged position and the disengaged position.

14. The method of claim 13 and further including:

removing the key from the keyway after disposing said body in said engaged position

* * * * *

PR 0307

ET50485

US005913666A

United States Patent [19]

Perkins

[11] Patent Number: 5,913,666

[45] Date of Patent: Jun. 22, 1999

[54] SECURITY LOCK FOR FIREARMS

[76] Inventor: Richard E. Perkins, 10526 Willetts Crossing Rd., White Plains, Md. 20695

[21] Appl. No.: 08/931,778

[22] Filed: Sep. 16, 1997

[51] Int. Cl.[6] F41A 17/00

[52] U.S. Cl. 42/70.11; 42/70.08

[58] Field of Search 42/70.11, 70.08

[56] References Cited

U.S. PATENT DOCUMENTS

4,048,741	9/1977	Chiodo et al.	42/1 LP
4,392,318	7/1983	Daniels	41/1
4,961,277	10/1990	Rosenbaum	42/70.11
4,995,180	2/1991	Tucker et al.	42/70.07
5,099,596	3/1992	Butler, Jr.	42/70.11
5,245,776	9/1993	Dornstu	42/70.08
5,419,069	5/1995	Mumbleau et al.	42/70.11
5,446,988	9/1995	Frederick, Jr.	42/70.11
5,465,519	11/1995	Blanck	42/70.11
5,467,550	11/1995	Mumbleau	42/70.11
5,611,164	3/1997	Rassias	42/70.11

Primary Examiner—Charles T. Jordan
Assistant Examiner—Meena Chelliah
Attorney, Agent, or Firm—Kennedy, Davis & Kennedy

[57] ABSTRACT

An apparatus and method for securing a firearm from firing by engaging a security lock to a slide at a butt end of the firearm. The security lock has a housing defined by a pair of sidewalls joined by a top plate that defines a slot for receiving a sight on the slide. A controller extends through a rear plate of the housing. A security member is operatively engaged to the controller for being moved between a first position for installing and removing the housing from the slide of the handgun and a second position in which the security member operatively secures the housing to the slide by being disposed between the rear portion of the slide and the handle of the firearm, thereby holding the slide in a partially rearward position with the firearm out-of-battery and the trigger mechanism of the firearm disengaged from the firing pin mechanism. A method of locking firearms is disclosed. The method discloses using a universal key for the lock.

7 Claims, 3 Drawing Sheets

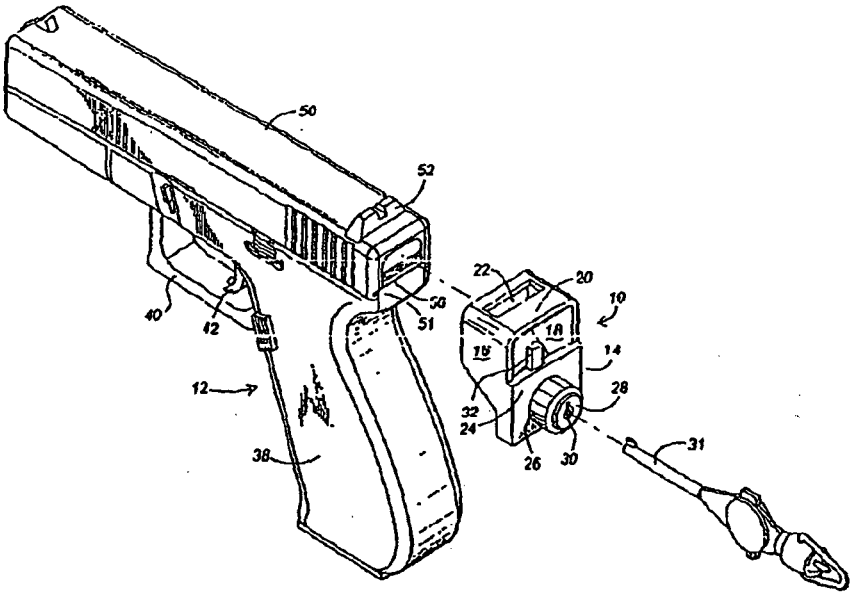

PR 0308

ET50486

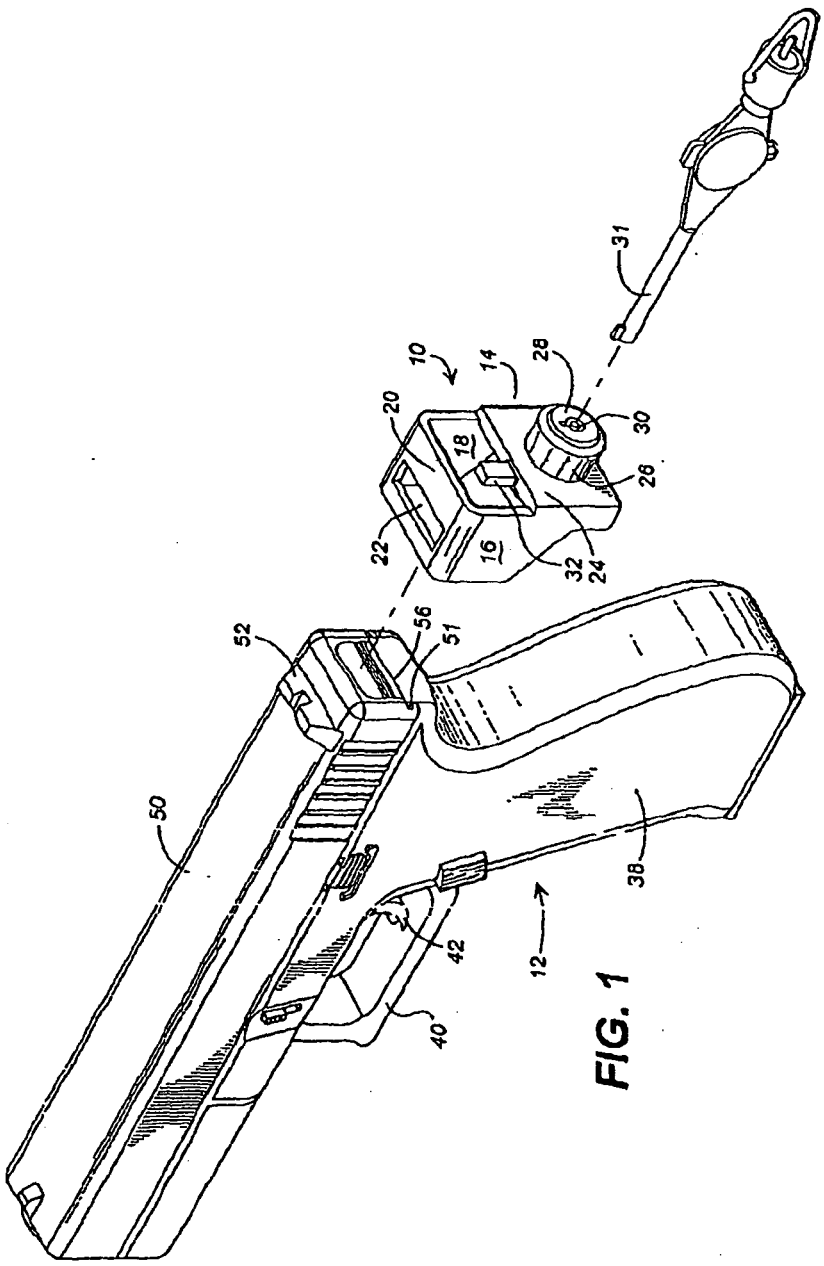

FIG. 1

PR 0309

ET50487

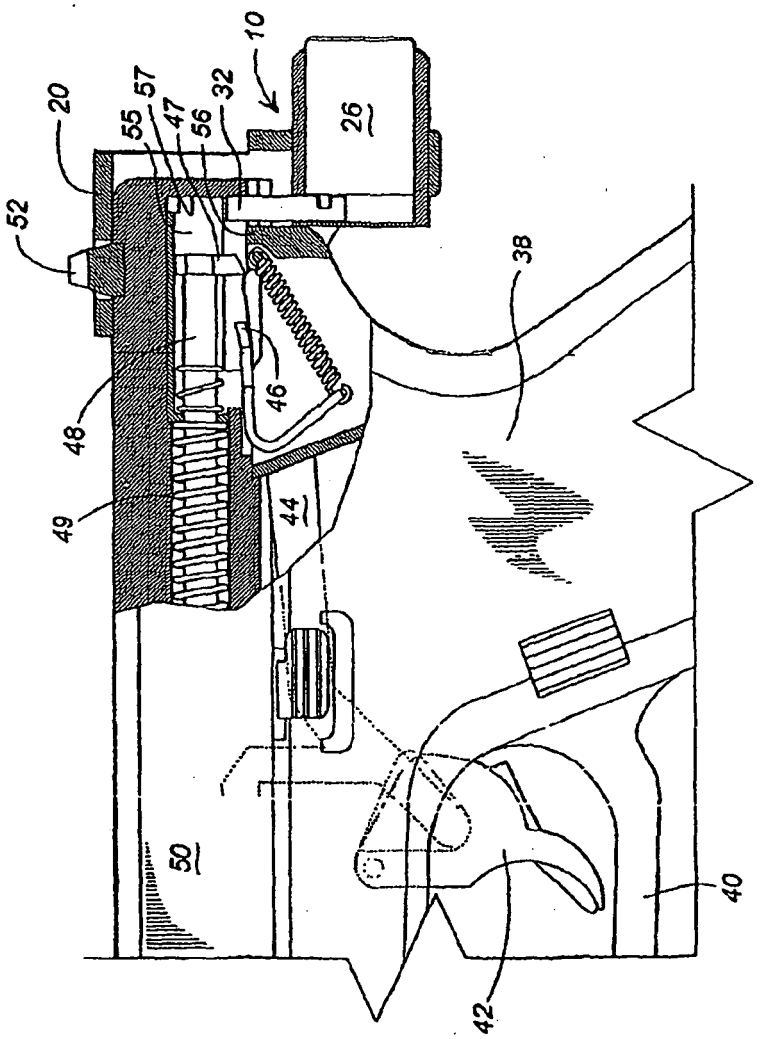

FIG. 2

PR 0310

ET50488

3/3

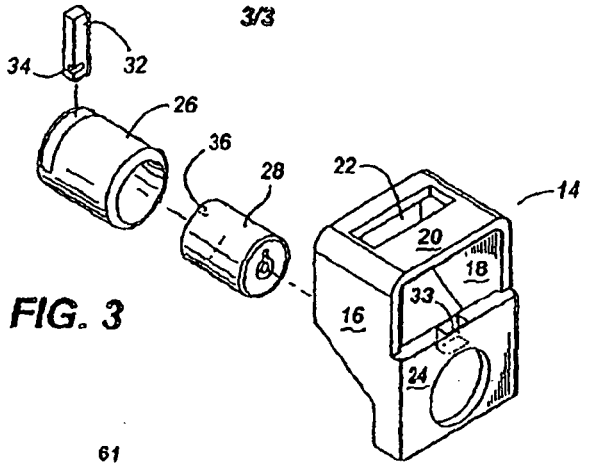

FIG. 3

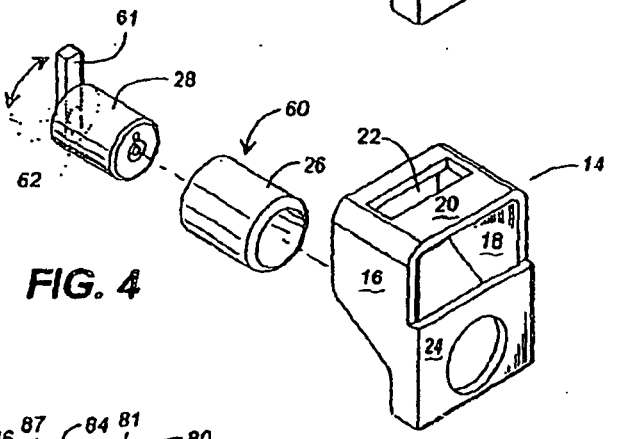

FIG. 4

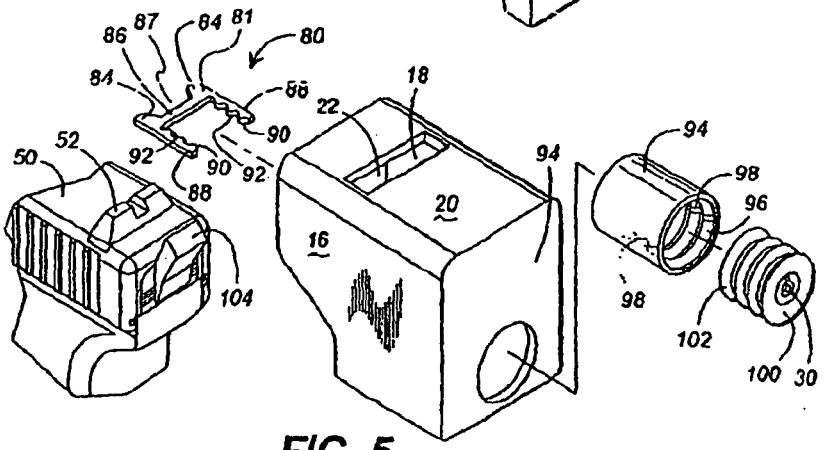

FIG. 5

PR 0311

ET50489

SECURITY LOCK FOR FIREARMS

TECHNICAL FIELD

The present invention relates generally to devices for securing firearms from firing. More particularly, the present invention relates to selectively installed and removed securing device which locks firearm handguns from being fired accidently.

BACKGROUND OF THE INVENTION

Firearm safety is an important issue to persons who are involved in carrying and using firearms. Generally safe handling of firearms consists of proper education, training, and practice in the use, cleaning, and storage of firearms. However, concerns have recently been raised regarding the accessibility of firearms to unauthorized persons, such as children who are living at the home of a firearm owner or visiting such homes. Several legislatures have enacted statutes requiring firearm owners to keep firearms away from children. The purpose is to prevent accidental deaths and injuries to persons arising from the accidental discharge of a firearm by a child.

As a mechanism for reducing the number of such accidental shootings, police agencies are also being required to issue gun locks to officers carrying firearms. The use of the gun lock is mandated for securing the firearm from being fired, particularly while the officer is off-duty at home. The gun lock prevents accidental discharge of the secured firearm and thereby prevent injuries to persons, and prevents unauthorized persons, especially children, from accidently operating the firearm.

Various types of gun locks have been developed to provide a securing device for guns for owners wishing to secure the firearms from being fired accidentally. Among these are devices that engage the muzzle, that engage the trigger guard, and that restrict the slide of a handgun from movement. For example, one device provides a safety strap having a contoured opening which fits snugly over the hammer. The hammer is moved to a cocked position and distal ends of the strap are drawn tightly around the upper portion of the handle of the pistol and around the front of the trigger guard. The free ends of the straps overlap and are snapped together with snap fasteners.

Another quick-release safety device for revolvers has a block that is inserted within the muzzle of a handgun. A strap extends behind the hammer and has extending arms that receive a cap. The cap engages the muzzle block. The strap prevents the hammer from being retracted. Another similar device for immobilizing a revolver-type handgun provides an elastic strap which extends around the hammer. A pin attached to the strap is received within the bore of the muzzle. The device is installed by first wrapping the strap around the hammer, stretchingly elongating the elastic rubber strap and inserting the pin into the muzzle. The strap then retracts, pulling the pin within the muzzle, and preventing the hammer from rearward movement.

Securing devices have also been developed for use with semi-automatic slide-type handguns. One such device provides a locking mechanism which installs in the breech after the slide assembly is fully retracted and held in place by a slide catch. A foot, rotatable by a key-lock mechanism, engages beneath and between cartridge-retaining surfaces at the top of the magazine in order to secure the firearm locking mechanism to the top of the magazine. This device prevents the breech block from closing or the magazine from being removed. Another semi-automatic pistol having a moveable slide includes a built-in safety mechanism which is installed in a rear portion of the slide assembly. Circular apertures in the sidewalls receive a cylindrical body having a semi-circular rear block. Rotation of the body disposes the rear block between the hammer assembly and a rear face of the firing pin to prevent the hammer assembly from being completely received within the slide assembly and contacting the firing pin. The body also presses the firing pin a short distance forward as would normally occur with the manual safety of a semi-automatic pistol were moved to the on position and thereby disabling the operative connection between the trigger assembly and the hammer assembly.

While these devices operate for locking a firearm from firing, there are drawbacks to their use. In particular, some of the prior art devices require handling and manipulation of straps and locks around the trigger of the handgun. This is not in accord with safe firearm practices which preferably instruct a user of a firearm to avoid contacting or handling the trigger unless during an attempt to fire the weapon. Other devices have elastic bands which may stretch and become elongated and thereby defeat the purpose of holding the hammer from being moved pulling the trigger. Still other devices require insertion of components into the bore of the muzzle or the breech block. These devices accordingly engage operating surfaces of the firearm which raise additional risks of damage to the firearm and to the shooter using the firearm

Many of these devices include a key-and-lock feature in order to lock the securing device in position. The lock prevents the device from being removed by unauthorized persons. The keys provided are distinct, whereby the owner of one security lock may not necessarily be able to unlock and release the securing device owned by another person. For law enforcement personnel and security officers, however this adds an additional key which must be carried with the typical many number of keys law enforcement personnel are expected to carry and have readily available.

Accordingly, there remains a need in the art for an improved gun lock for use with firearms. It is to the provision of such that the present invention is directed.

SUMMARY OF THE PRESENT INVENTION

The present invention solves the need in the art by providing a security lock for firearms and particularly for types of firearm handguns having a slide rearwardly displaceable in a direction from a muzzle end towards a butt end of the handgun, when the handgun is fired by pulling the trigger. The security lock comprises a housing having a pair of opposing sidewalls joined together by a top plate. The top plate defines an engagement slot for receiving a sight which extends from a rearward portion of a slide of a handgun. A rear plate attaches to the back edges of the sidewalls. A controller extends through a rear plate of the housing. A security member is operatively engaged to the controller. The security member is movable between a first position in which the housing is installed and removed from the slide of the handgun, and a second position in which the security member operatively secures the housing to the slide in a partially rearward position whereby the trigger mechanism of the handgun is disengaged from a firing pin mechanism to render the firearm out-of-battery. The security member, being disposed between the rear portion of the slide and the handle of the handgun, restricts the slide from returning to an in-battery position and thereby disables the firearm from firing. More particularly described, the controller includes a lock which secures the security member in the second position.

PR 0312

ET50490

The present invention further provides a method of securing firearms from firing. The slide is moved manually slightly rearwardly to disconnect the firearm from being in-battery for firing. The housing is placed over a sight extending from a rearward portion of the slide. The housing has a pair of opposing sidewalls joined together by a top plate at respective distal ends. The top plate defines an engagement slot therein for receiving the sight. The securing member is moved from a disengaged position to an engaged position in order to secure the housing to the slide in the partially rearward position in which the trigger mechanism of the firearm is disengaged from a firing pin mechanism in order to render the firearm out of battery. The securing member in the second position is disposed between the rear portion of the slide and an upper portion of the handle of the firearm. The securing member prevents the slide from returning to an in-battery position and thereby disables the firearm from accidental operation. In another aspect of the method of securing firearms from accidental firing, a lock is provided, whereby the securing member is locked in position to prevent removal of the housing.

In another aspect, the present invention provides a method of securing firearms from firing in which a device to restrict firing of a firearm is operatively engaged to the firearm. The device then is locked with a universal key to secure the device from being removed from the firearm and thereby securing the disablement of the firearm from firing.

Objects, features and advantages of the present invention will become apparent upon reading the following detailed description of the disclosed embodiment of the present invention, in conjunction with the appended drawings and claims.

BRIEF DESCRIPTION OF THE DRAWINGS

FIG. 1 is a perspective view of preferred embodiment of a firearm security lock and key according to the present invention, exploded from a firearm handgun to which the security lock attaches.

FIG. 2 is a side view of the firearm security lock illustrated in FIG. 1 engaged to a butt end of the firearm

FIG. 3 is a perspective exploded view of the firearm security lock illustrated in FIG. 1

FIG. 4 is a perspective exploded view of an alternate embodiment of the firearm security lock illustrated in FIG. 1.

FIG. 5 is a perspective exploded view of an alternate embodiment of the firearm security lock device having a U-shaped yoke, for use with hammer-type firearms.

DETAILED DESCRIPTION OF THE PREFERRED EMBODIMENTS

Referring now in more detail to the drawings in which like parts have like identifiers, FIG. 1 is a perspective view of a firearm security lock 10 according to the present invention exploded away from a butt end of a firearm 12 to which the security lock attaches to secure the firearm for an accidental operation. FIG. 3 illustrates an exploded perspective view of the security lock 10. With continuing reference to FIGS. 1 and 3, the firearm security lock 10 comprises a housing 14 having a pair of opposing sidewalls 16 and 18 joined at distal ends by a top plate 20. The top plate 20 defines a slot 22. The housing 14 also has a back plate 24 from which a lock housing 26 extends laterally A rotatable cylinder 28 is disposed within the lock housing 26 and includes a conventional key slot 30 and internally has a conventional cylinder lock assembly with pins that are selectively actuated by a key 31 for allowing the cylinder 28 to rotate. The cylinder 28 extends through the back plate 24 within the lock housing 26. A securing member 32 operatively connects to the cylinder 28. The securing member 32 is movable between a first position for installing the security lock 10 on the firearm and a second position which holds the security lock to the firearm. The cylinder lock 28 within the lock housing 26 accordingly defines a controller for moving the securing member 32.

In a preferred embodiment, the securing member 32 is an elongated metal bar having a notch 34. A cam pin 36 extends laterally of a distal end of the cylinder 28 and engages the notch 34. The securing member 32 is moveable vertically between a first position and a second position. A slot 33 on the back plate 24 guides the movement of the securing member 32. In the first position, the securing member 32 is retracted away from the top plate 20 whereby the housing 14 can be installed and removed from the firearm 12. In the second position, the securing member 32 is disposed within an interior cavity 55 of the firearm 12 to hold the housing 14 engaged to the firearm 12. The second position is best illustrated in FIG. 2 in which the slide-type firearm 12 is shown in cut-away side view with the firearm security lock 10.

With continuing reference to FIGS. 1 and 2, the firearm 12 is representative of firearms having a trigger assembly that operates a firing pin The illustrated firearm 12 includes a handle 38 with a slide 50 which engages and travels on rails 51 in the handle. A trigger guard 40 covers a trigger 42 that connects through a trigger bar 44 to a sear 46 which operatively engages a tang or nose 47 of a firing pin 48 As the trigger 42 is pulled, the trigger bar 44 causes the sear 46 to move the firing pin 48 rearwardly. The sear 46 reaches its maximum movement and releases from the nose 47 of the firing pin 48. The firing pin 48 releases and is driven by a firing pin spring 49 into engagement with a cartridge in the breech. The slide 50 engages the rails 51 on the handle 38 and is movable longitudinally relative to a muzzle of the firearm 12. The slide 50 includes a rear sight 52.

In FIG. 2, the firearm security lock 10 is shown attached to the slide 50 of the firearm 12. The sight 52 extends through the slot 22 The securing member 32 is in the second position within the cavity 55 at the butt end of the slide 50. The cavity 55 is defined by a rearward upper edge portion 56 of the handle 38 and an interior rearward end 57 of the slide 50. The securing member 32 poises the slide 50 in a slightly rearward position in which the firearm 12 is out-of-battery. By this is meant that the trigger bar 44 is disengaged from the firing pin 48, so that even if the trigger 42 were to be pulled, the firing pin would not be driven into the cartridge.

FIG. 4 is a perspective exploded view of an alternate embodiment 60 of the firearm securing lock 10. In this embodiment, a securing member 61 comprises an elongated metal bar which is connected at a first end 62 to the distal end of the cylinder 28. The securing member 61 is pivotable from a first position (shown in phantom) for installing and removing the housing 14 on the firearm 12 to a second position whereby the securing member 61 is disposed in the cavity 55 of the slide 50.

FIG. 5 is a perspective exploded view of an alternate embodiment of the firearm security lock 10 according to the present invention, particularly for use with conventional hammer-type firearms. In this embodiment, a securing member 80 comprises a plate 81 which defines a generally U-shape yoke 82 The plate 81 has a pair of arms 84 that

PR 0313

ET50491

extend in a first direction from a transverse portion 86. The pair of arms 84 are spaced-apart to define a recess 87 in an edge of the plate 81, for a purpose discussed below. The arms 84 and the recess 87 cooperatively define a generally U-shaped yoke. A pair of guide arms 88 extend in a second direction opposite the first direction in spaced-apart parallel relation. An inside edge 89 of each arm 88 defines a series of circular segments 90, 92 whereby the inside edge has a scalloped or undulated edge, for a purpose discussed below.

A lock housing 94 defines an inner surface 96. The lock housing 94 in the illustrated embodiment is mounted internal to the housing 14, but in an alternate embodiment, (not illustrated) the lock housing 94 is mounted external, similar to the lock housing 26 shown in FIG. 1. A pair of channels 98 are defined in opposing portions of the surface 96. The channels 98 receive the sides of the arms 88 in sliding relation. A cylindrical lock 100 having a threaded exterior 102 is received within the lock housing 94. The exterior 102 matingly engages the inside edge 89 of the arms 88, whereby the segments 90, 92 engage the thread of the lock 100. Rotation of the lock 100 causes the threads to bear against the segments 90, 92 and move the plate 81 relative to the housing 14, as discussed below.

With reference to FIGS. 1–3, the firearm securing lock 10 of the present invention is installed on the butt portion of the firearm 12 to secure the firearm from accidental operation. First, the slide 50 is slightly retracted to open a gap between the rearward upper edge portion 56 of the handle 38 and the interior rearward end 57 of the slide 50. Second, the housing 14 is attached to the slide 50 by inserting the sight 52 through the slot 22 and pivoting the housing downwardly to align the sides 16 and 18 with the sides of the slide. Third, the securing lock is secured to the firearm 12. The key 31 is inserted in the key slot 30 and twisted to rotate the cylinder 28 within the lock housing 26. The cam pin 36, engaged in the notch 34, moves in an arc as the cylinder 28 is rotated. This causes the securing member 32 to move vertically between the first position retracted from the top plate 20 to the second position in the cavity 55. The slot 33 guides the travel of the securing member 32. The key 31 is removed from the cylinder 28. The firearm security lock 10 is thereby secured to the slide 50. The slide 50 is released. The securing member 32 however blocks the complete return travel of the slide 50 and holds the firearm 12 out-of-battery. The trigger 42 and its connecting assembly is disengaged from the firing pin assembly so that even if the tripper were to be pulled, the firing pin 48 would not be driven into a cartridge. The firearm 12 is thereby rendered inoperative and is held out-of-battery by the firearm security lock 10.

In order to remove the security lock 10, the slide 50 is slightly retracted, the key 31 is inserted into the cylinder 28 and rotated. The securing member 32 is thereby moved from the second position to the first position. The housing 14 is grasped on the sides 16 and 18 and with an upward and pivotable movement, the security lock 10 is detached from the firearm 12. The slide 50 is allowed to return forwardly on the firearm 12 and thereby place the firearm in-battery for operation.

In the alternate embodiment illustrated in FIG. 4, the cylinder 28 rotates to pivot the securing member 61 from the first position (shown in phantom) to the second position within the cavity 55 for holding the firearm 12 out-of-battery.

The embodiment illustrated in FIG. 5 is particularly suited for use with hammer-type firearms. The slide 50 is slightly retracted away from the muzzle of the firearm. The housing 14 is placed on the butt end of the slide by inserting the sight 52 into the slot 22 and pivoting the housing 14 towards the handle of the firearm. The hammer 104 of the firearm is received in the recess 87 of the plate 81. The key 31 is received in the key slot 30 of the lock 100. Rotation of the lock 100 causes the threads on the lock 100 to engage the segments 90, 92 of the arms 88 and thereby move the plate 81 axially. The plate 81 moves from a first position retracted within the housing 14 to a second position extended from the housing 14. The distal ends of the arms 84 contact the rails 51 in the upper edge of the handle 38. The key 31 is removed. The security lock 10 is thereby fixed to the slide 50 with the plate 81 extended from the housing 14 to the second position. The slide 50 is released, but the plate 81 being in the extended, or second position, in the housing 14, holds the firearm 12 out-of-battery, whereby the firearm is secured from accidental operation.

The firearm security lock of the embodiment illustrated in FIG. 5 is likewise easily removed by moving the plate 81 from the second position to the first position. This is accomplished by inserting the key 31 into the cylinder lock 100 and rotating in order to retract the plate 81 into the housing 14 to the first position. The security lock 10 is removed from engagement with the butt end of the slide 50 by a pivoting upward movement of the housing 14.

The present invention accordingly provides a firearm security lock which is easily installed and removed, being secured to the firearm by a lock actuated by a key. The present invention interposes a securing member between the rear portions of the slide and the handle to restrain the slide from return travel and thereby holding the firearm out-of-battery. According to the present invention, the cylinder lock is of conventional construction and operation. Because security personnel, police officers, and other individuals carrying firearms typically have a large number of keys they are required to carry, the method of the present invention provides a universal key for locking and unlocking the firearm security lock 10 of the present invention. In particular, the universal key preferably comprises a key that police officers are already carrying for another purpose. In a preferred embodiment, the universal key comprises a conventional handcuff key. In this way, the police officers are encouraged to use the firearm security lock 10 of the present invention, in that a universal key already carried by the officer operates the security lock.

The principles, preferred embodiments, and modes of operation of the present invention have been described in the foregoing specification. The invention is not to be construed as limited to the particular forms disclosed because these are regarded as illustrative rather than restrictive. Moreover, variations and changes may be made by those skilled in the art without departure from the spirit of the invention as described by the following claims.

What is claimed is:

1. A security lock for handguns having a slide rearwardly displaceable in a direction from a muzzle end towards a butt end of the handgun when the handgun is fired with the handgun in-battery, comprising:

a housing having a pair of opposing side walls joined together by a top plate attached to the side walls at respective distal ends, the top plate defining an engagement slot therein for receiving a sight extending from a rearward portion of a slide of a handgun, and a rear plate attached to the side walls at rearward side edges thereof;

a controller extending through the rear plate of the housing,

PR 0314

ET50492

a security member operatively engaged to the controller and movable in response to the controller between a first position in which the housing is installed and removed from a slide of a handgun and a second position in which the security member operatively secures the housing to the slide in a partially rearwardly position in which a trigger mechanism of the handgun is disengaged from a firing pin mechanism to render the handgun out-of-battery,

whereby, the slide, being secured by the security member in the out-of-battery second position is restricted by the security member from returning to an in-battery position and thereby disabling the handgun.

2. The security lock for a handgun as recited in claim 1, further comprising a lock operatively engaged to the controller for securing the security member in the second position.

3. The security lock for a handgun as recited in claim 1, wherein the controller comprises a rotatable cylinder; and

the securing member comprises a bar connected to the rotatable cylinder, whereby rotating the cylinder causes the bar to move from the first position to the second position.

4. The security lock for a handgun as recited in claim 1, wherein the controller comprises a rotatable cylinder having a pin extending from a portion of the cylinder; and

the securing member comprises a bar having a cam surface defined by a groove therein and said pin engaging the cam surface in the bar,

whereby the cylinder, being rotated, moves the bar from the first position to the second position.

5. The security lock for a handgun as recited in claim 1, wherein the security member comprising a U-shaped yoke movable to the second position in which the distal ends of the yoke align with the rails of the slide to hold the handgun out-of-battery.

6. The security lock for a handgun as recited in claim 1 wherein the controller comprises a rotatable cylinder having an external threaded surface; and a housing which receives the rotatable cylinder, the housing defining a pair of spaced-apart channels therein,

and wherein the security member comprises a plate having a pair of spaced-apart arms slidably received in the pair of channels, each of said arms defining an interior edge for mating engagement with the threaded exterior of the cylinder received in the housing, whereby rotation of the cylinder causes the plate to move axially from the first position to the second position.

7. A method of securing firearms from firing, which firearms have a slide rearwardly displaceable in a direction from a muzzle end towards a butt end when fired with the firearm in-battery, comprising the steps of:

(a) moving the slide manually slightly rearwardly to disconnect the firearm from being in-battery for firing;

(b) placing a housing over a sight that extends from a rearward portion of the slide, the housing having a pair of opposing side walls joined together by a top plate at respective distal ends, the top plate defining an engagement slot therein for receiving the sight therethrough;

(c) moving a securing member from a disengaged position to an engaged position which operatively secures the housing to the slide in the partially rearwardly position in which a trigger mechanism of the handgun is disengaged from a firing pin mechanism to render the firearm out-of-battery,

whereby the securing member, being moved to the engaged position after inserting the sight at the rear portion of the slide of the handgun into the engagement slot in the top of the housing, restricts the slide from returning to an in-battery position and thereby holding the firearm disabled from firing.

* * * * *

PR 0315

ET50493

PR 0316

ET50494

US006122851A

United States Patent [19]

Perkins

[11] Patent Number: 6,122,851

[45] Date of Patent: *Sep. 26, 2000

[54] SECURITY LOCK FOR FIREARMS

[76] Inventor: Richard E. Perkins, 10526 Willetts Crossing Rd., White Plains, Md. 20695

[*] Notice: This patent is subject to a terminal disclaimer.

[21] Appl. No.: 09/337,697

[22] Filed: Jun. 21, 1999

Related U.S. Application Data

[63] Continuation of application No. 08/931,778, Sep 16, 1997, Pat. No. 5,913,666.

[51] Int. Cl.[7] F41A 17/02; F41A 17/42

[52] U.S. Cl. 42/70.11; 42/70.08

[58] Field of Search 42/70.08, 70.11, 42/70.01; 89/148

[56] References Cited

U.S. PATENT DOCUMENTS

4,048,741	9/1977	Chodo et al.	42/70.11
4,392,318	7/1983	Daniels	42/70.11
4,961,277	10/1990	Rosenbaum	42/70.11
4,995,180	2/1991	Tucker et al.	42/70.07
5,099,596	3/1992	Butler, Jr.	42/70.11
5,245,776	9/1993	Dornaus	42/70.08
5,261,177	11/1993	Armstrong	42/70.08
5,331,759	7/1994	Marceau et al.	42/70.11
5,419,069	5/1995	Mumbleau et al.	42/70.11
5,446,988	9/1995	Frederick, Jr.	42/70.11
5,465,519	11/1995	Blanck	42/70.11
5,467,550	11/1995	Mumbleau	42/70.11
5,548,915	8/1996	Szarmach et al.	42/70.11
5,611,164	3/1997	Rassias	42/70.11
5,680,723	10/1997	Ruiz	42/70.11
5,732,497	3/1998	Brooks	42/70.08
5,913,666	6/1999	Perkins	42/70.11

Primary Examiner—Stephen M. Johnson
Attorney, Agent, or Firm—Kennedy, Davis & Hodge, LLP

[57] ABSTRACT

An apparatus and method for securing a firearm from firing by engaging a security lock to a slide at a butt end of the firearm. The security lock has a housing defined by a pair of sidewalls joined by a top plate that defines a slot for receiving a sight on the slide. A controller extends through a rear plate of the housing. A security member is operatively engaged to the controller for being moved between a first position for installing and removing the housing from the slide of the handgun and a second position in which the security member operatively secures the housing to the slide by being disposed between the rear portion of the slide and the handle of the firearm, thereby holding the slide in a partially rearward position with the firearm out-of-battery and the trigger mechanism of the firearm disengaged from the firing pin mechanism. A method of locking firearms is disclosed. The method discloses using a universal key for the lock.

12 Claims, 3 Drawing Sheets

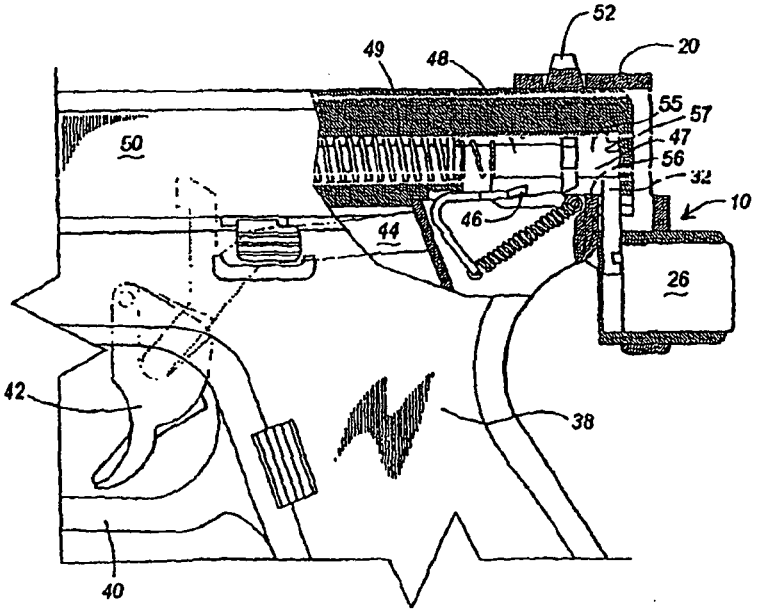

PR 0317

ET50495

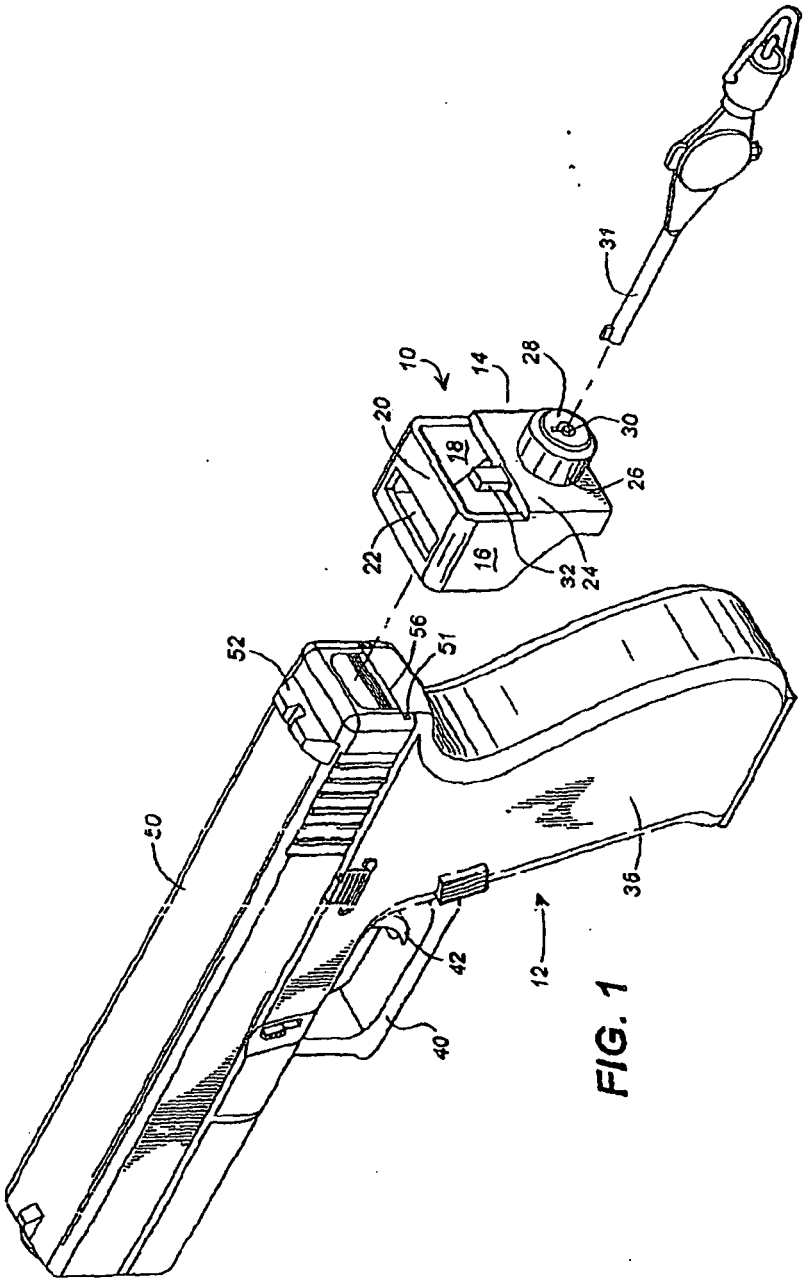

FIG. 1

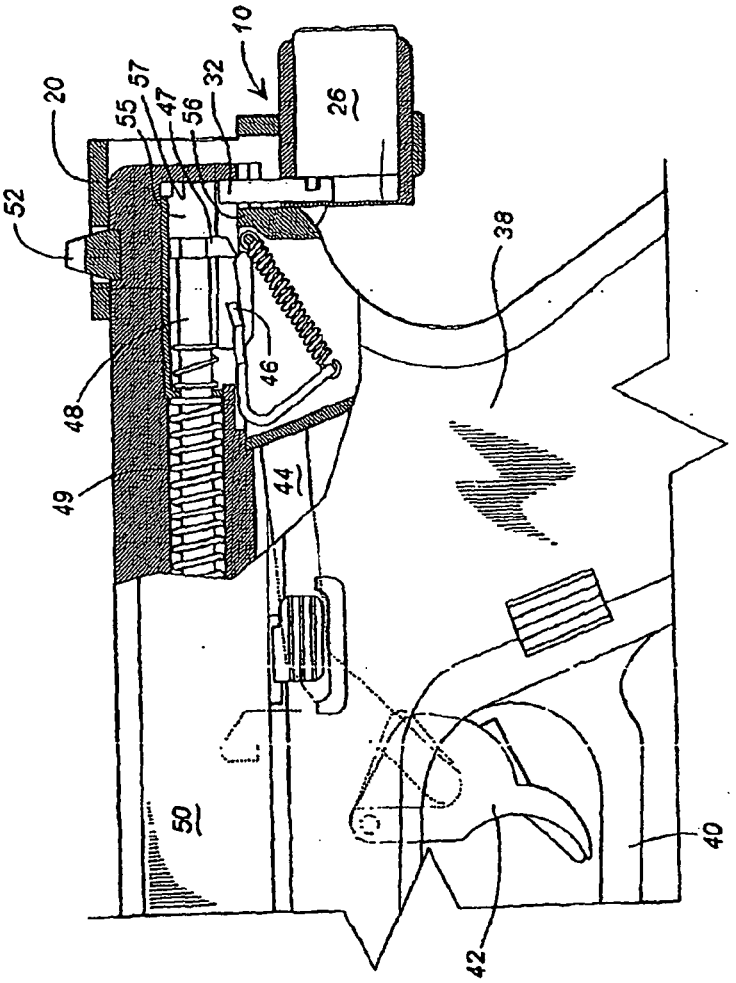

FIG. 2

PR 0319

ET50497

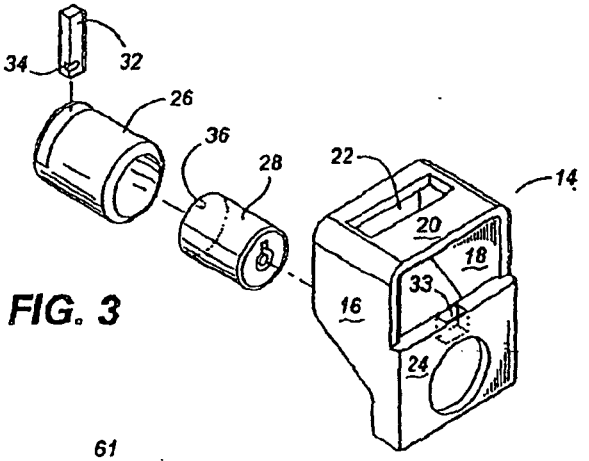

FIG. 3

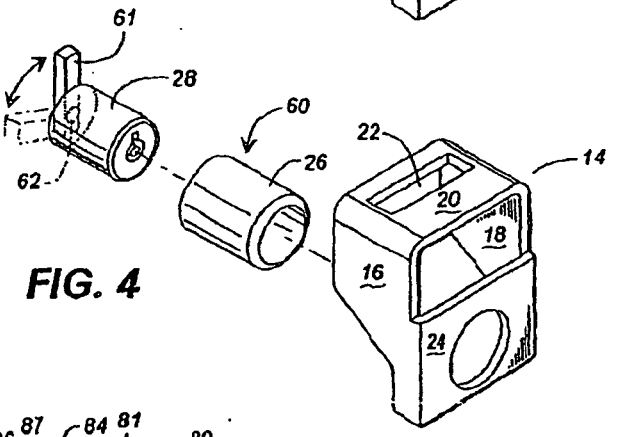

FIG. 4

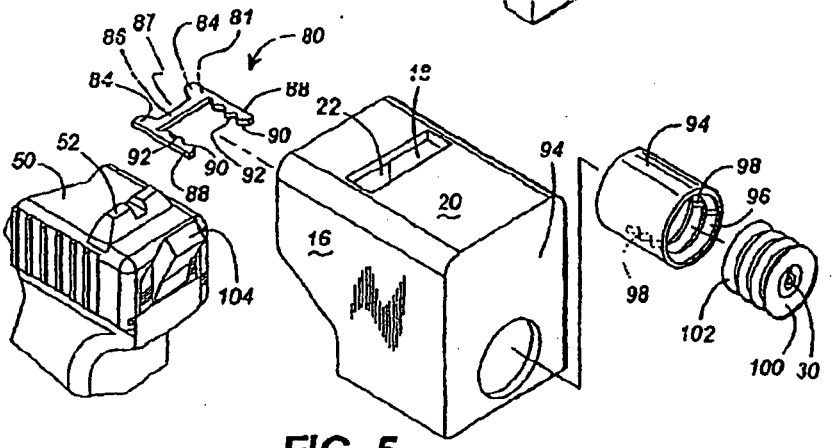

FIG. 5

PR 0320

SECURITY LOCK FOR FIREARMS

This application is a continuation of Ser. No. 08/931,778, filed Sep. 16, 1997, issued as U.S. Pat. No. 5,913,666 on Jun. 22, 1999.

TECHNICAL FIELD

The present invention relates generally to devices for securing firearms from firing. More particularly, the present invention relates to selectively installed and removed securing device which locks firearm handguns from being fired accidently.

BACKGROUND OF THE INVENTION

Firearm safety is an important issue to persons who are involved in carrying and using firearms. Generally safe handling of firearms consists of proper education, training, and practice in the use, cleaning, and storage of firearms. However, concerns have recently been raised regarding the accessibility of firearms to unauthorized persons, such as children who are living at the home of a firearm owner or visiting such homes. Several legislatures have enacted statutes requiring firearm owners to keep firearms away from children. The purpose is to prevent accidental deaths and injuries to persons arising from the accidental discharge of a firearm by a child.

As a mechanism for reducing the number of such accidental shootings, police agencies are also being required to issue gun locks to officers carrying firearms. The use of the gun lock is mandated for securing the firearm from being fired, particularly while the officer is off-duty at home. The gun lock prevents accidental discharge of the secured firearm and thereby prevent injuries to persons, and prevents unauthorized persons, especially children, from accidently operating the firearm.

Various types of gun locks have been developed to provide a securing device for guns for owners wishing to secure the firearms from being fired accidentally. Among these are devices that engage the muzzle, that engage the trigger guard, and that restrict the slide of a handgun from movement. For example, one device provides a safety strap having a contoured opening which fits snugly over the hammer. The hammer is moved to a cocked position and distal ends of the strap are drawn tightly around the upper portion of the handle of the pistol and around the front of the trigger guard. The free ends of the straps overlap and are snapped together with snap fasteners.

Another quick-release safety device for revolvers has a block that is inserted within the muzzle of a handgun. A strap extends behind the hammer and has extending arms that receive a cap. The cap engages the muzzle block. The strap prevents the hammer from being retracted. Another similar device for immobilizing a revolver-type handgun provides an elastic strap which extends around the hammer. A pin attached to the strap is received within the bore of the muzzle. The device is installed by first wrapping the strap around the hammer, stretchingly elongating the elastic rubber strap and inserting the pin into the muzzle. The strap then retracts, pulling the pin within the muzzle, and preventing the hammer from rearward movement.

Securing devices have also been developed for use with semi-automatic slide-type handguns. One such device provides a locking mechanism which installs in the breech after the slide assembly is fully retracted and held in place by a slide catch. A foot, rotatable by a key-lock mechanism, engages beneath and between cartridge-retaining surfaces at

the top of the magazine in order to secure the firearm locking mechanism to the top of the magazine. This device prevents the breech block from closing or the magazine from being removed. Another semi-automatic pistol having a moveable slide includes a built-in safety mechanism which is installed in a rear portion of the slide assembly. Circular apertures in the sidewalls receive a cylindrical body having a semi-circular rear block. Rotation of the body disposes the rear block between the hammer assembly and a rear face of the firing pin to prevent the hammer assembly from being completely received within the slide assembly and contacting the firing pin. The body also presses the firing pin a short distance forward as would normally occur with the manual safety of a semi-automatic pistol were moved to the on position and thereby disabling the operative connection between the trigger assembly and the hammer assembly.

While these devices operate for locking a firearm from firing, there are drawbacks to their use. In particular, some of the prior art devices require handling and manipulation of straps and locks around the trigger of the handgun. This is not in accord with safe firearm practices which preferably instruct a user of a firearm to avoid contacting or handling the trigger unless during an attempt to fire the weapon. Other devices have elastic bands which may stretch and become elongated and thereby defeat the purpose of holding the hammer from being moved pulling the trigger. Still other devices require insertion of components into the bore of the muzzle or the breech block. These devices accordingly engage operating surfaces of the firearm which raise additional risks of damage to the firearm and to the shooter using the firearm.

Many of these devices include a key-and-lock feature in order to lock the securing device in position. The lock prevents the device from being removed by unauthorized persons. The keys provided are distinct, whereby the owner of one security lock may not necessarily be able to unlock and release the securing device owned by another person. For law enforcement personnel and security officers, however this adds an additional key which must be carried with the typical many number of keys law enforcement personnel are expected to carry and have readily available.

Accordingly, there remains a need in the art for an improved gun lock for use with firearms. It is to the provision of such that the present invention is directed.

SUMMARY OF THE PRESENT INVENTION

The present invention solves the need in the art by providing a security lock for firearms and particularly for types of firearm handguns having a slide rearwardly displaceable in a direction from a muzzle end towards a butt end of the handgun, when the handgun is fired by pulling the trigger. The security lock comprises a housing having a pair of opposing sidewalls joined together by a top plate. The top plate defines an engagement slot for receiving a sight which extends from a rearward portion of a slide of a handgun. A rear plate attaches to the back edges of the sidewalls. A controller extends through a rear plate of the housing. A security member is operatively engaged to the controller. The security member is movable between a first position in which the housing is installed and removed from the slide of the handgun, and a second position in which the security member operatively secures the housing to the slide in a partially rearward position whereby the trigger mechanism of the handgun is disengaged from a firing pin mechanism to render the firearm out-of-battery. The security member, being disposed between the rear portion of the slide and the

PR 0321

ET50499

handle of the handgun, restricts the slide from returning to an in-battery position and thereby disables the firearm from firing. More particularly described, the controller includes a lock which secures the security member in the second position.

The present invention further provides a method of securing firearms from firing. The slide is moved manually slightly rearwardly to disconnect the firearm from being in-battery for firing. The housing is placed over a sight extending from a rearward portion of the slide. The housing has a pair of opposing sidewalls joined together by a top plate at respective distal ends. The top plate defines an engagement slot therein for receiving the sight. The securing member is moved from a disengaged position to an engaged position in order to secure the housing to the slide in the partially rearward position in which the trigger mechanism of the firearm is disengaged from a firing pin mechanism in order to render the firearm out of battery. The securing member in the second position is disposed between the rear portion of the slide and an upper portion of the handle of the firearm. The securing member prevents the slide from returning to an in-battery position and thereby disables the firearm from accidental operation. In another aspect of the method of securing firearms from accidental firing, a lock is provided, whereby the securing member is locked in position to prevent removal of the housing.

In another aspect, the present invention provides a method of securing firearms from firing in which a device to restrict firing of a firearm is operatively engaged to the firearm. The device then is locked with a universal key to secure the device from being removed from the firearm and thereby securing the disablement of the firearm from firing.

Objects, features and advantages of the present invention will become apparent upon reading the following detailed description of the disclosed embodiment of the present invention, in conjunction with the appended drawings and claims.

BRIEF DESCRIPTION OF THE DRAWINGS

FIG. 1 is a perspective view of preferred embodiment of a firearm security lock and key according to the present invention, exploded from a firearm handgun to which the security lock attaches.

FIG. 2 is a side view of the firearm security lock illustrated in FIG. 1 engaged to a butt end of the firearm.

FIG. 3 is a perspective exploded view of the firearm security lock illustrated in FIG. 1.

FIG. 4 is a perspective exploded view of an alternate embodiment of the firearm security lock illustrated in FIG. 1.

FIG. 5 is a perspective exploded view of an alternate embodiment of the firearm security lock device having a U-shaped yoke, for use with hammer-type firearms.

DETAILED DESCRIPTION OF THE PREFERRED EMBODIMENTS

Referring now in more detail to the drawings in which like parts have like identifiers, FIG. 1 is a perspective view of a firearm security lock 10 according to the present invention exploded away from a butt end of a firearm 12 to which the security lock attaches to secure the firearm for an accidental operation. FIG. 3 illustrates an exploded perspective view of the security lock 10. With continuing reference to FIGS 1 and 3, the firearm security lock 10 comprises a housing 14 having a pair of opposing sidewalls 16 and 18 joined at distal ends by a top plate 20. The top plate 20 defines a slot 22. The housing 14 also has a back plate 24 from which a lock housing 26 extends laterally. A rotatable cylinder 28 is disposed within the lock housing 26 and includes a conventional key slot 30 and internally has a conventional cylinder lock assembly with pins that are selectively actuated by a key 31 for allowing the cylinder 28 to rotate. The cylinder 28 extends through the back plate 24 within the lock housing 26. A securing member 32 operatively connects to the cylinder 28. The securing member 32 is movable between a first position for installing the security lock 10 on the firearm and a second position which holds the security lock to the firearm. The cylinder lock 28 within the lock housing 26 accordingly defines a controller for moving the securing member 32.

In a preferred embodiment, the securing member 32 is an elongated metal bar having a notch 34. A cam pin 36 extends laterally of a distal end of the cylinder 28 and engages the notch 34. The securing member 32 is moveable vertically between a first position and a second position. A slot 33 on the back plate 24 guides the movement of the securing member 32. In the first position, the securing member 32 is retracted away from the top plate 20 whereby the housing 14 can be installed and removed from the firearm 12. In the second position, the securing member 32 is disposed within an interior cavity 55 of the firearm 12 to hold the housing 14 engaged to the firearm 12. The second position is best illustrated in FIG. 2 in which the slide-type firearm 12 is shown in cut-away side view with the firearm security lock 10.

With continuing reference to FIGS. 1 and 2, the firearm 12 is representative of firearms having a trigger assembly that operates a firing pin. The illustrated firearm 12 includes a handle 38 with a slide 50 which engages and travels on rails 51 in the handle. A trigger guard 40 covers a trigger 42 that connects through a trigger bar 44 to a sear 46 which operatively engages a tang or nose 47 of a firing pin 48. As the trigger 42 is pulled, the trigger bar 44 causes the sear 46 to move the firing pin 48 rearwardly. The sear 46 reaches its maximum movement and releases from the nose 47 of the firing pin 48. The firing pin 48 releases and is driven by a firing pin spring 49 into engagement with a cartridge in the breech. The slide 50 engages the rails 51 on the handle 38 and is movable longitudinally relative to a muzzle of the firearm 12. The slide 50 includes a rear sight 52.

In FIG. 2, the firearm security lock 10 is shown attached to the slide 50 of the firearm 12. The sight 52 extends through the slot 22. The securing member 32 is in the second position within the cavity 55 at the butt end of the slide 50. The cavity 55 is defined by a rearward upper edge portion 56 of the handle 38 and an interior rearward end 57 of the slide 50. The securing member 32 holds the slide 50 in a slightly rearward position in which the firearm 12 is out-of-battery. By this is meant that the trigger bar 44 is disengaged from the firing pin 48, so that even if the trigger 42 were to be pulled, the firing pin would not be driven into the cartridge.

FIG. 4 is a perspective exploded view of an alternate embodiment 60 of the firearm securing lock 10. In this embodiment, a securing member 61 comprises an elongated metal bar which is connected at a first end 62 to the distal end of the cylinder 28. The securing member 61 is pivotable from a first position (shown in phantom) for installing and removing the housing 14 on the firearm 12 to a second position whereby the securing member 61 is disposed in the cavity 55 of the slide 50.

FIG. 5 is a perspective exploded view of an alternate embodiment of the firearm security lock 10 according to the

PR 0322

ET50500

present invention, particularly for use with conventional hammer-type firearms. In this embodiment, a securing member 80 comprises a plate 81 which defines a generally U-shape yoke 82. The plate 81 has a pair of arms 84 that extend in a first direction from a transverse portion 86. The pair of arms 84 are spaced-apart to define a recess 87 in an edge of the plate 81, for a purpose discussed below. The arms 84 and the recess 87 cooperatively define a generally U-shaped yoke. A pair of guide arms 88 extend in a second direction opposite the first direction in space-dapart parallel relation. An inside edge 89 of each arm 88 defines a series of circular segments 90, 92 whereby the inside edge has a scalloped or undulated edge, for a purpose discussed below.

A lock housing 94 defines an inner surface 96. The lock housing 94 in the illustrated embodiment is mounted internal to the housing 14, but in an alternate embodiment, (not illustrated) the lock housing 94 is mounted external, similar to the lock housing 26 shown in FIG. 1. A pair of channels 98 are defined in opposing portions of the surface 96. The channels 98 receive the sides of the arms 88 in sliding relation. A cylindrical lock 100 having a threaded exterior 102 is received within the lock housing 94. The exterior 102 matingly engages the inside edge 89 of the arms 88, whereby the segments 90, 92 engage the thread of the lock 100. Rotation of the lock 100 causes the threads to bear against the segments 90, 92 and move the plate 81 relative to the housing 14, as discussed below.

With reference to FIGS. 1–3, the firearm securing lock 10 of the present invention is installed on the butt portion of the firearm 12 to secure the firearm from accidental operation. First, the slide 50 is slightly retracted to open a gap between the rearward upper edge portion 56 of the handle 38 and the interior rearward end 57 of the slide 50. Second, the housing 14 is attached to the slide 50 by inserting the sight 52 through the slot 22 and pivoting the housing downwardly to align the sides 16 and 18 with the sides of the slide. Third, the securing lock is secured to the firearm 12. The key 31 is inserted in the key slot 30 and twisted to rotate the cylinder 28 within the lock housing 26. The cam pin 36, engaged in the notch 34, moves in an arc as the cylinder 28 is rotated. This causes the securing member 32 to move vertically between the first position retracted from the top plate 20 to the second position in the cavity 55. The slot 33 guides the travel of the securing member 32. The key 31 is removed from the cylinder 28. The firearm security lock 10 is thereby secured to the slide 50. The slide 50 is released. The securing member 32 however blocks the complete return travel of the slide 50 and holds the firearm 12 out-of-battery. The trigger 42 and its connecting assembly is disengaged from the firing pin assembly so that even if the trigger were to be pulled, the firing pin 48 would not be driven into a cartridge. The firearm 12 is thereby rendered inoperative and is held out-of-battery by the firearm security lock 10. In order to remove the security lock 10, the slide 50 is slightly retracted, the key 31 is inserted into the cylinder 28 and rotated. The securing member 32 is thereby moved from the second position to the first position. The housing 14 is grasped on the sides 16 and 18 and with an upward and pivotable movement, the security lock 10 is detached from the firearm 12. The slide 50 is allowed to return forwardly on the firearm 12 and thereby place the firearm in-battery for operation.

In the alternate embodiment illustrated in FIG. 4, the cylinder 28 rotates to pivot the securing member 61 from the first position (shown in phantom) to the second position within the cavity 55 for holding the firearm 12 out-of-battery

The embodiment illustrated in FIG. 5 is particularly suited for use with hammer-type firearms. The slide 50 is slightly retracted away from the muzzle of the firearm. The housing 14 is placed on the butt end of the slide by inserting the sight 52 into the slot 22 and pivoting the housing 14 towards the handle of the firearm. The hammer 104 of the firearm is received in the recess 87 of the plate 81. The key 31 is received in the key slot 30 of the lock 100. Rotation of the lock 100 causes the threads on the lock 100 to engage the segments 90, 92 of the arms 88 and thereby move the plate 81 axially. The plate 81 moves from a first position retracted within the housing 14 to a second position extended from the housing 14. The distal ends of the arms 84 contact the rails 51 in the upper edge of the handle 38. The key 31 is removed. The security lock 10 is thereby fixed to the slide 50 with the plate 81 extended from the housing 14 to the second position. The slide 50 is released, but the plate 81 being in the extended, or second position, in the housing 14, holds the firearm 12 out-of-battery, whereby the firearm is secured from accidental operation.

The firearm security lock of the embodiment illustrated in FIG. 5 is likewise easily removed by moving the plate 81 from the second position to the first position. This is accomplished by inserting the key 31 into the cylinder lock 100 and rotating in order to retract the plate 81 into the housing 14 to the first position. The security lock 10 is removed from engagement with the butt end of the slide 50 by a pivoting upward movement of the housing 14.

The present invention accordingly provides a firearm security lock which is easily installed and removed, being secured to the firearm by a lock actuated by a key. The present invention interposes a securing member between the rear portions of the slide and the handle to restrain the slide from return travel and thereby holding the firearm out-of-battery. According to the present invention, the cylinder lock is of conventional construction and operation. Because security personnel, police officers, and other individuals carrying firearms typically have a large number of keys they are required to carry, the method of the present invention provides a universal key for locking and unlocking the firearm security lock 10 of the present invention. In particular, the universal key preferably comprises a key that police officers are already carrying for another purpose. In a preferred embodiment, the universal key comprises a conventional handcuff key. In this way, the police officers are encouraged to use the firearm security lock 10 of the present invention, in that a universal key already carried by the officer operates the security lock.

The principles, preferred embodiments, and modes of operation of the present invention have been described in the foregoing specification. The invention is not to be construed as limited to the particular forms disclosed because these are regarded as illustrative rather than restrictive. Moreover, variations and changes may be made by those skilled in the art without departure from the spirit of the invention as described by the following claims.

What is claimed is:

1. A method of securing firearms from firing, which firearms have a slide rearwardly displaceable in a direction from a muzzle end towards a butt end when fired with the firearm in-battery, comprising the steps of:

(a) moving the slide manually slightly rearwardly to a partially rearward position to disconnect the firearm from being in-battery for firing;

(b) placing a housing over a sight that extends from a rearward portion of the slide, the housing having a pair of opposing side walls joined together by a top plate at respective distal ends, the top plate defining an engagement slot therein for receiving the sight therethrough;

PR 0323

ET50501

(c) moving a securing member from a disengaged position to an engaged position which operatively secures the housing to the slide in the partially rearward position in which a trigger mechanism of the handgun is disengaged from a firing pin mechanism to render the firearm out-of-battery; and

(d) locking the securing member in the engaged position,

whereby the securing member, being moved to the engaged position after inserting the sight at the rear portion of the slide of the handgun into the engagement slot in the top of the housing, restricts the slide from returning to an in-battery position and thereby holding the firearm disabled from firing.

2. The method for securing firearms as recited in claim 1, wherein the step (d) of locking is accomplished using a universal key.

3. The method for securing firearms as recited in claim 1, wherein the step (d) of locking is accomplished using a handcuff key.

4. A security lock in combination with a handgun with associated slide rearwardly displaceable in a direction from a muzzle end towards a butt end of the handgun when the handgun is fired with the handgun in-battery, comprising:

a housing having a pair of opposing side walls joined together by a top plate attached to the side walls at respective distal ends, the top plate defining an engagement slot therein for receiving a sight extending from a rearward portion of the slide of the handgun, and a rear plate attached to the side walls at rearward side edges thereof;

a security member movable between a first position in which the housing is installed and removed from the slide of the handgun and a second position in which the security member operatively secures the housing to the slide in a partially rearwardly position in which a trigger mechanism of the handgun is disengaged from a firing pin mechanism to render the handgun out-of-battery; and

a lock disposed in the housing and operative in response to a key for securing the security member in the second position,

whereby, the slide, being secured by the security member in the out-of-battery second position is restricted by the security member from returning to an in-battery position and thereby disabling the handgun.

5. The security lock in combination with a handgun as recited in claim 4, wherein the lock is operative for moving between a locked and an unlocked position by a universal key.

6. The security lock in combination with a handgun as recited in claim 5, wherein the universal key is a handcuff key.

7. The security lock in combination with a handgun as recited in claim 4, wherein the lock comprises a rotatable cylinder; and

the securing member comprises a bar connected to the rotatable cylinder, whereby rotating the cylinder causes the bar to move from the first position to the second position.

8. The security lock in combination with a handgun as recited in claim 7, wherein the lock is operative for moving between a locked and an unlocked position by a universal key.

9. The security lock in combination with a handgun as recited in claim 8, wherein the universal key is a handcuff key.

10. The security lock in combination with a handgun as recited in claim 4, wherein the lock comprises a rotatable cylinder having a pin extending from a portion of the cylinder; and

the securing member comprises a bar having a cam surface defined by a groove therein and said pin engaging the cam surface in the bar,

whereby the cylinder, being rotated, moves the bar from the first position to the second position.

11. The security lock in combination with a handgun as recited in claim 10, wherein the lock is operative for moving between a locked and an unlocked position by a universal key.

12. The security lock in combination with a handgun as recited in claim 11, wherein the universal key is a handcuff key.

* * * * *

PR 0324

ET50502

US006260298B1

(12) **United States Patent**
Bubits

(10) **Patent No.: US 6,260,298 B1**
(45) **Date of Patent: Jul. 17, 2001**

(54) **PISTOL HAVING A FIRING BOLT SAFETY DEVICE**

(75) Inventor: Wilhelm Bubits, Brunn/Gebirge (AT)

(73) Assignee: Steyr-Daimler-Puch Aktiengesellschaft, Vienna (AT)

(*) Notice: Subject to any disclaimer, the term of this patent is extended or adjusted under 35 U.S.C. 154(b) by 0 days.

(21) Appl. No.: 09/340,426

(22) Filed: Jun. 28, 1999

(30) Foreign Application Priority Data

Jul. 14, 1998 (AT) ..... A 1213/98

(51) Int. Cl.[7] F41A 17/02; F41A 17/64

(52) U.S. Cl. 42/70.08; 42/70.11

(58) Field of Search 42/70.08, 70.01

(56) References Cited

U.S. PATENT DOCUMENTS

4,021,955	*	5/1977	Curtis	42/70 F
4,555,861	*	12/1985	Khowry	42/70 F
4,658,529		4/1987	Bertolini	42/70.08
4,726,136	*	2/1988	Dornaus et al	42/70.08
4,843,748	*	7/1989	Tuma	42/70.08
5,419,069	*	5/1995	Mumbleau et al	42/70.11
5,438,784	*	8/1995	Lenkarski et al.	42/70.02

FOREIGN PATENT DOCUMENTS

4013124 10/1991 (DE).

* cited by examiner

Primary Examiner—Charles T. Jordan
Assistant Examiner—Kyongtack K. Mun
(74) *Attorney, Agent, or Firm*—Bachman & LaPointe, P.C.

(57) ABSTRACT

A pistol, comprising a housing which contains a trigger device and a slide which slides on this housing and contains a barrel and a breech, in which case the breech is provided with a firing bolt which can be driven by a mainspring. In order to provide entirely safe protection against access, the breech has a hole which runs transversely with respect to the firing direction, in which hole a locking bolt can be moved and can be rotated, which locking bolt has a head which is accessible from the outside and, in the locked position, projects into the movement path of the firing bolt. To this end, the head of the locking bolt has at least one tab on its external circumference, and the breech has at least one recess on the internal circumference of the hole, which recess holds the tab when the locking bolt is in the open position.

9 Claims, 3 Drawing Sheets

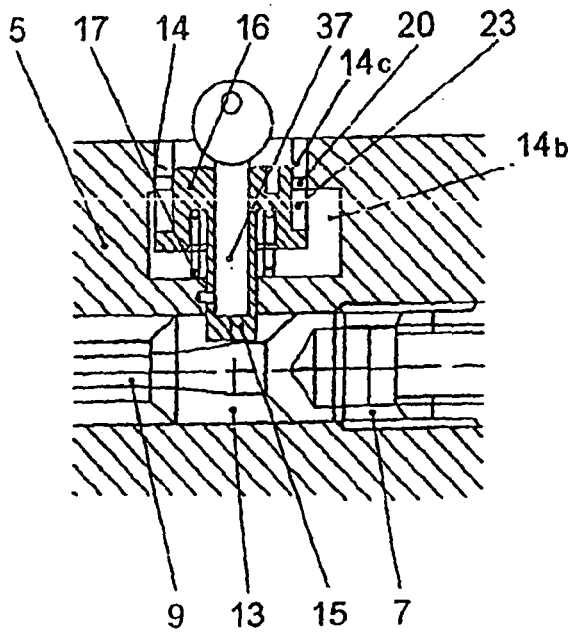

PR 0326

ET50504

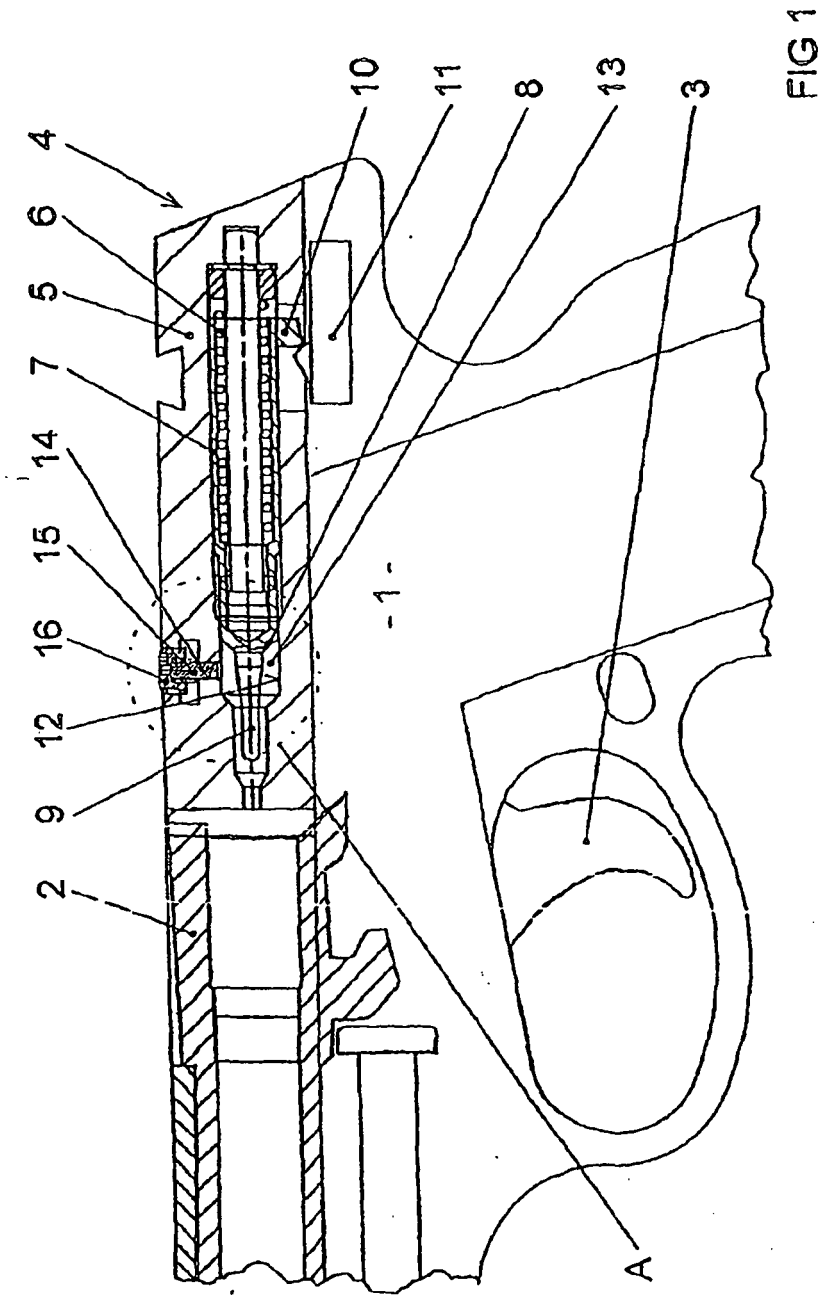

FIG 1

PR 0327

ET50505

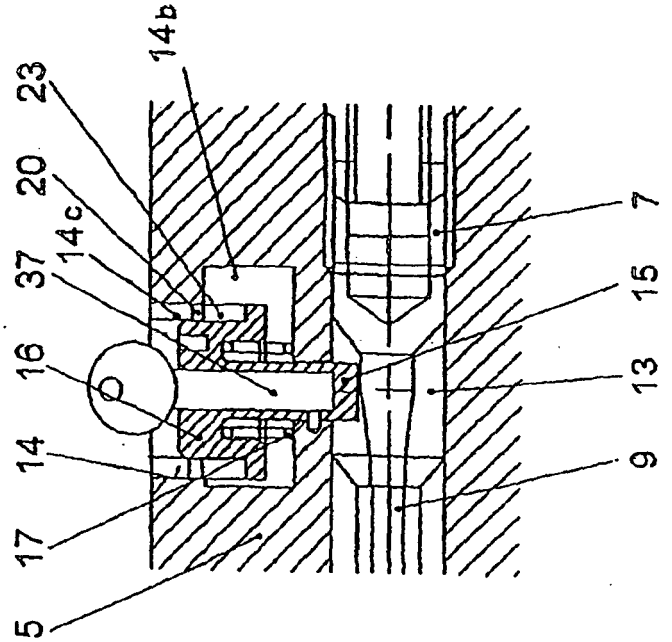

FIG 3

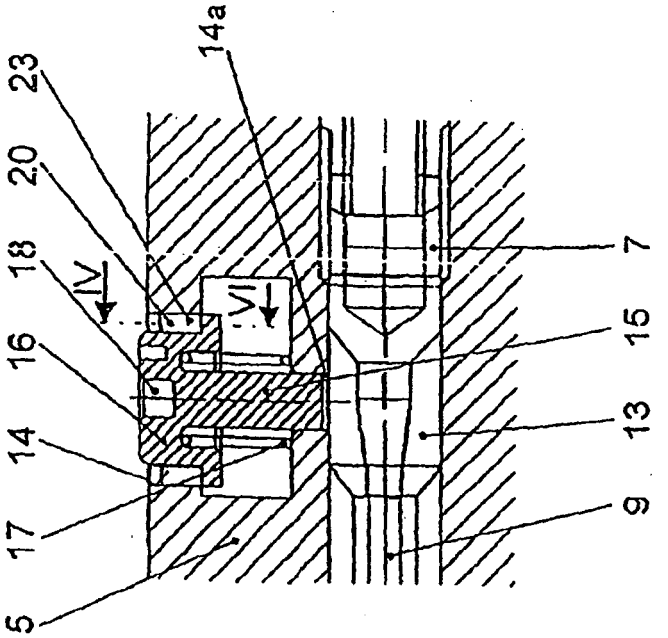

FIG 2

PR 0328

ET50506

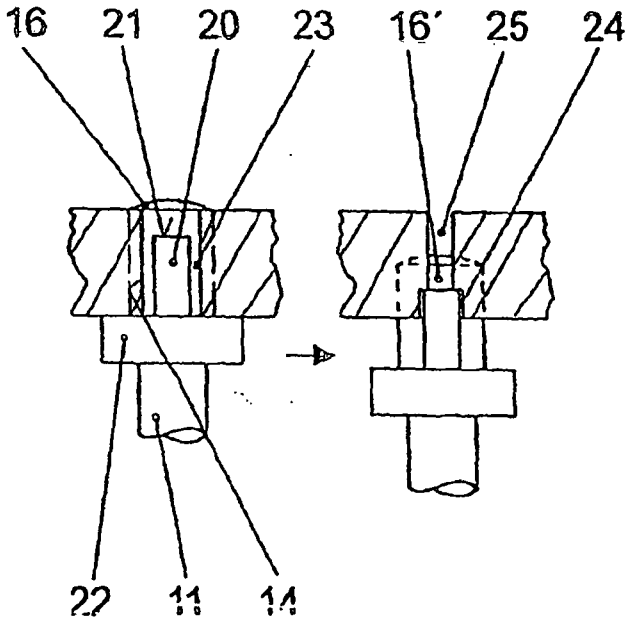

FIG 4

PR 0329

ET50507

PISTOL HAVING A FIRING BOLT SAFETY DEVICE

BACKGROUND OF THE INVENTION

The invention relates to a pistol which comprises a housing which contains a trigger device and a slide which slides on the housing and contains a barrel and a breech, in which case the breech is provided with a firing bolt which can be driven by a mainspring, and a trigger is operatively connected to the trigger device such that, when the trigger is operated, the firing bolt is released, and the breech of the pistol has a hole which runs transversely with respect to the firing direction and in which a locking bolt can be moved and can be rotated, which locking bolt has a head which is accessible from the outside and, in the locked position, projects into the movement path of the firing bolt.

Owing to the repeated incidence of accidents and incidents, in which children or youths use fire arms without permission, even the lawmakers are increasingly demanding that access to firearms be made more difficult. Long guns are normally stored in boxes that can be locked, but it has not been possible to implement this for pistols, which are frequently kept in desks or bedside tables. The usual solution thus comprises additional devices which enclose and fill out the trigger guard, and which are locked by means of a lock, thus making it impossible to move the trigger. Apart from the fact that such devices are bulky and impractical, they do not provide complete safety. Since there are intermediate elements between the trigger and the firing bolt, the firing bolt can nevertheless be released, for example if the pistol is dropped. Furthermore, this does not prevent the slide from being removed and a shot being fired. There is therefore a requirement for a real firing bolt lock with final safety, which also involves protection against access.

In the case of a pistol which is disclosed in DE 40 13 124 A1, drop protection is provided in the form of a locking piece which can be moved transversely with respect to the firing direction. However, this method of operation means that the firing bolt has to be able to move in the vertical direction, and, furthermore, it is not positively locking.

U.S. Pat. No. 4,658,529 A discloses a pistol in which a locking bolt, which is arranged in the transverse direction and can be moved, has an oblique rib which, when locked, engages in a cutout on the shank of the firing bolt. Owing to the rib, the locking movement of the locking bolt is considerable and the locking bolt cannot be rotated, so that it cannot be fixed in the locked position. In consequence, protection against access can be achieved only with major effort. Furthermore, this relates to a pistol with a hammer action, in which the mainspring acts against the firing direction. This firing bolt protection device cannot be used in a pistol having a mainspring that acts in the firing direction.

The object of the present invention is to provide a means of protection against access for pistols of this generic type, which avoids all the disadvantages mentioned and which offers a very high level of safety against use by unauthorized persons, with very little physical complexity.

SUMMARY OF THE INVENTION

The foregoing object is achieved according to the present invention wherein the locking bolt can be locked in the locked position by turning it, and in that the head of the locking bolt has at least one tab on its external circumference, and the breech has at least one recess on the internal circumference of the hole, which recess holds the tab when the locking bolt is in the open position.

Since the locking bolt can be turned, there are no movement problems involved with its operation and it can be accommodated in a very small space, as a result of which the movement of the locking bolt need be only very short. The tab on the head of the locking bolt and the recess on the internal circumference of the hole allow the locking bolt to be fixed in the locked position safely, cheaply, and in a particularly space-saving manner.

Within the context of the invention, the recess may extend over the entire depth of the hole, and the tab may have a paint mark on its outward-facing side. It is thus possible to see whether or not the weapon is locked. In this case, it is practical for manufacture and use for the head to have a collar internally, adjacent to the tab.

It is a major advantage of the invention that, owing to its indifference with regard to movement, it can be used with widely differing pistols and in various arrangements. Operation is particularly convenient if the hole runs vertically from the top of the breech. The weapon can then be locked from above, in which case the safety of a cylinder lock can easily be made use of. Installation in the bolt has in this case been found to be particularly space-saving.

BRIEF DESCRIPTION OF THE DRAWINGS

The invention will be described and explained in the following text with reference to illustrations, in which.

FIG. 1 shows a side view of a pistol according to the invention,

FIG. 2 shows the detail A from FIG. 1, in the open position,

FIG. 3 shows the detail A from FIG. 1, in the locked position,

FIG. 4 shows a cross section along IV—IV, enlarged and developed.

DETAILED DESCRIPTION

FIG 1 shows the essential part of a pistol according to the invention, to be precise a grip 1, made, for example, of plastic, above which a slide 4 with a barrel 2 is guided such that it can be moved. A trigger 3 projects downward out of the upper part of the grip 1. The trigger 3 is mounted in the interior of the grip 1 such that it can pivot. Inside the slide, there is a breech 5, in whose interior a firing bolt 7 (on which a mainspring 6 acts) can be moved in the longitudinal direction. This firing bolt 7 merges at the front, into a shoulder 8, into the firing pin 9 and has a downwardly projecting lug 10 which, in order to fire a shot, is released by means 11 which are operated by the trigger 3, may differ widely, and are thus not shown in detail.

The firing bolt 7 is guided in a longitudinal hole 12 and, in its cocked position, there is a free space 13 in front of its shoulder 8. A transverse hole 14 comprising lower portion 14*a*, enlarged middle portion 14*b* and upper portion 14*c* originates from this free space 13 and is provided with a locking bolt 15 which has a head 16 (which is accessible from the outside), and can be moved in front of the shoulder 8 into the free space 13 in order to form a firing bolt protection device.

FIG. 2 shows the locking bolt 15, with its head 16, enlarged. The transverse hole 14 in the breech 5 may be arranged vertically (as in FIG. 2), but may just as well be arranged horizontally. The locking bolt 15 and the transverse hole 14 interact like a bayonet fitting. The head 16 is pushed outward by a compression spring 17. A hole 18 of any desired shape is provided in the head 16, into which an appropriate key can be inserted, in order to operate the lock.

PR 0330

ET50508

The bayonet-fitting-like interaction of the head 16 with the upper portion 14c of hole 14 is evident in conjunction with the schematic FIG. 4, in which the head 16 is shown in the open position on the left-hand side, and the same head 16' is shown in the closed position on the right-hand side. The head 16 has at least one tab 20, but preferably, as in the illustrated exemplary embodiment, two tabs offset through 180 degrees. Their outward-pointing corner surface 21 has a red paint mark. The cylindrical part of the head 16 is provided with a collar 22 before its transition into the locking bolt 15. Two recesses 23, which are likewise offset through 180 degrees and extend over the entire depth of the upper portion 14c of the transverse hole 14, are provided in said transverse hole 14. If the head 16 is now turned until the tabs 20 are no longer opposite the recess 23, but are opposite a further recess 24 that is considerably shallower, then this angular position is associated with a different travel position of the bolt 15, namely the locked position (FIG. 3). The only purpose of the small opening 25 is to make the red part 21 of the tab visible from the outside. The further recess 24 is not required, but is used for accurate positioning in the locked position.

In FIG. 3, in contrast to FIG. 2, a cylinder lock 37 is provided instead of the hole 18 in the head 16, which cylinder lock 37 can be locked with a key and interacts in a known manner with a corresponding recess in the transverse hole 14.

It is to be understood that the invention is not limited to the illustrations described and shown herein, which are deemed to be merely illustrative of the best modes of carrying out the invention, and which are susceptible of modification of form, size, arrangement of parts and details of operation. The invention rather is intended to encompass all such modifications which are within its spirit and scope as defined by the claims.

What is claimed is:

1. A pistol, comprising a housing which contains a trigger device, a slide which slides on the housing, the slide contains a barrel and a breech, wherein the breech is provided with a firing bolt driven by a mainspring, a trigger operatively connected to the trigger device for releasing the firing bolt along a movement path in a firing direction, the breech having a transverse hole which runs transversely with respect to the firing direction of the firing bolt, and in which a locking bolt can be moved, which locking bolt includes a head which is accessible from outside the slide and is selectively movable first rotatably and thereafter axially from a locked position wherein the locking bolt projects into the movement path of the firing bolt to an unlocked position wherein the locking bolt is retracted from the movement path, wherein the locking bolt has at least one tab selectively received in a recess in the transverse hole when the locking bolt is in the unlocked position.

2. The pistol as claimed in claim 1, wherein the hole includes an upper portion and the recess extends over the entire depth of the upper portion, and the tab has a paint mark on its outward-facing side.

3. The pistol as claimed in claim 1, wherein the hole runs vertically from the top of the breech.

4. The pistol as claimed in claim 1, wherein the locking bolt holds a locking cylinder of a cylinder lock.

5. The pistol as claimed in claim 1 wherein said transverse hole comprises an upper portion in which the head is axially moved and an enlarged portion in which the head is rotatably moved.

6. The pistol as claimed in claim 5, wherein the upper portion is provided with the recess and the head is provided with the at least one tab which is received in the recess when the head is moved axially.

7. The pistol as claimed in claim 1, wherein the head has a collar, internally and adjacent to the tab.

8. The pistol as claimed in claim 7, wherein the hole includes a middle portion and the collar is located in the middle portion when the locking bolt is in the locked position.

9. The pistol claimed in claim 8, wherein the locking bolt is spring loaded for biasing the locking bolt away from the movement path.

* * * * *

PR 0331

ET50509

13

PR 0332

ET50510

US006338217B1

(12) **United States Patent**
Viani

(10) Patent No.: **US 6,338,217 B1**
(45) Date of Patent: **Jan. 15, 2002**

(54) **FIRING PIN LOCKING SYSTEM**

(76) Inventor: Arthur Viani, 12219 SW. 131 Ave., Miami, FL (US) 33186

(*) Notice: Subject to any disclaimer, the term of this patent is extended or adjusted under 35 U.S.C. 154(b) by 0 days.

(21) Appl. No.: 09/662,578

(22) Filed: Sep. 15, 2000

(51) Int. Cl.[7] F41A 17/02
(52) U.S. Cl. 42/70.08; 42/70.11
(58) Field of Search 42/1.01, 70.01, 42/70.08, 70.11; 89/148, 174, 18

(56) **References Cited**

U.S. PATENT DOCUMENTS

1,842,847 A	*	1/1932	Stange	42/70.01
4,014,123 A	*	3/1977	Williams	42/1 LP
4,512,099 A	*	4/1985	Mathew	42/1 LP
4,726,136 A	*	2/1988	Domans et al.	42/70.08
5,913,666 A	*	6/1999	Perkins	42/70.11
6,240,670 B1	*	6/2001	Findlay	42/70.03

FOREIGN PATENT DOCUMENTS

GB	2215822 A	*	9/1989	F41C/17/08

* cited by examiner

Primary Examiner—Michael J. Carone
Assistant Examiner—Gabriel S Sukman
(74) *Attorney, Agent, or Firm*—J. Sanchelima; A. Bordas

(57) **ABSTRACT**

A firing pin locking mechanism that can be used on firearms. Controlled by a key, the internal locking device blocks all movement of the firing pin assembly striker, rendering the firing arm from discharging. The mechanism primarily comprises a spacer sleeve and a slide cover key plate. Utilizing the key, the authorized user has the ability to set the firearm in a "unlocked" or "locked" mode, even while in a holster. The internal locking mechanism is utilized as a means to prevent the movement of a firearm's firing pin assembly when activated by the trigger mechanism, regardless of the status of the firearm. The present invention is primarily utilized with semi-automatic firearms that have an enclosed striker assembly.

6 Claims, 3 Drawing Sheets

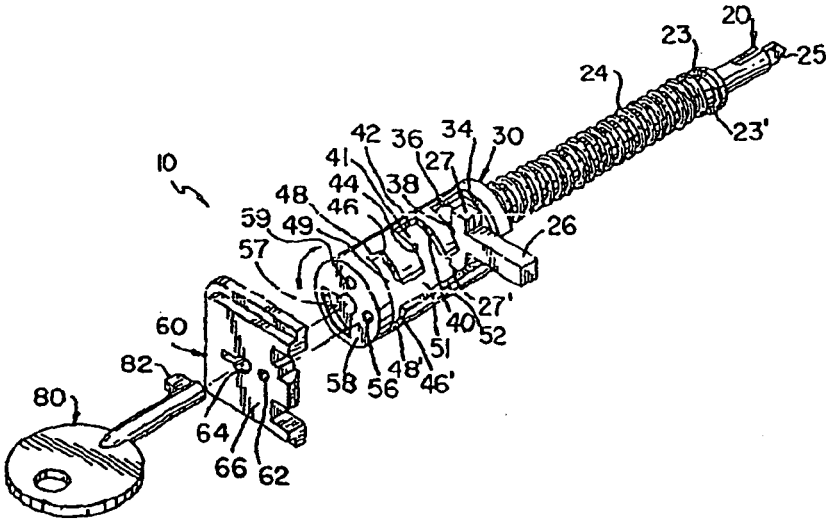

PR 0333

ET50511

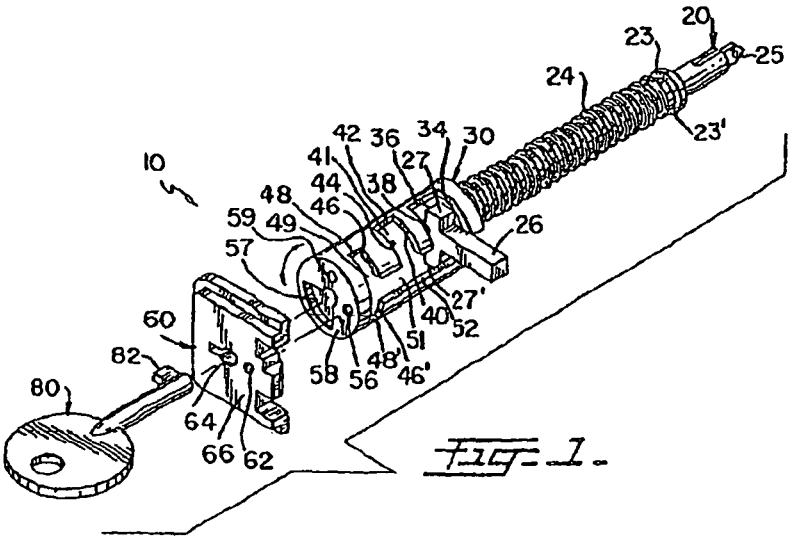

Fig. 1.

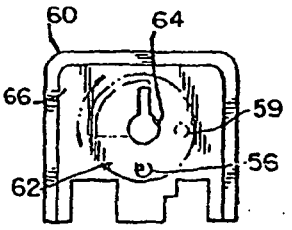

Fig. 2a.

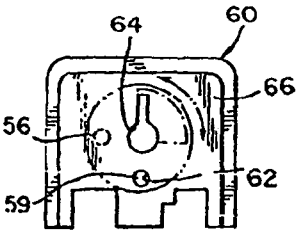

Fig. 2b.

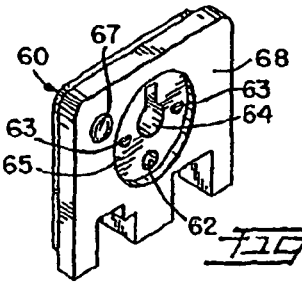

Fig. 2c.

PR 0334

ET50512

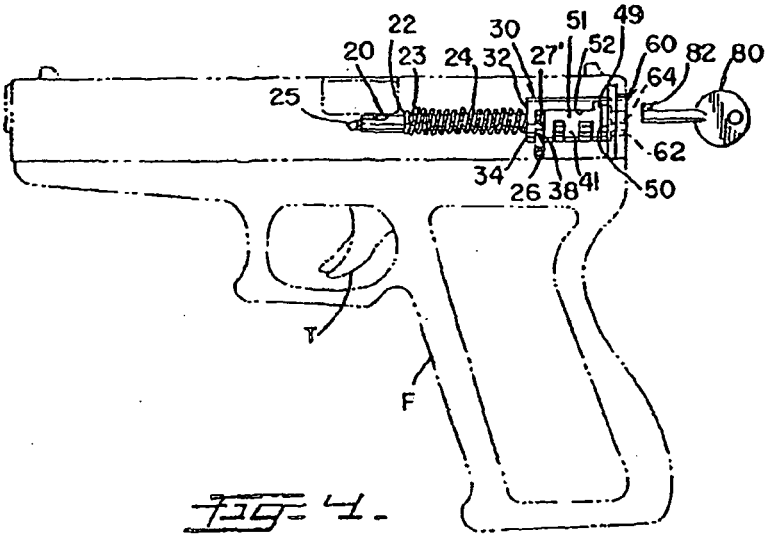

Fig. 4.

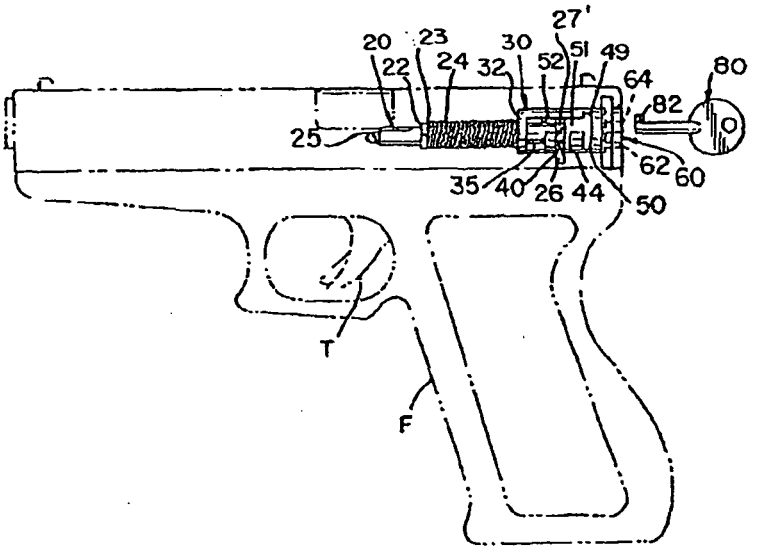

Fig. 3.

PR 0335

ET50513

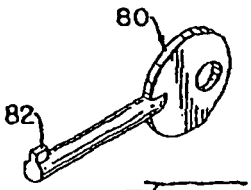

FIG. 6.

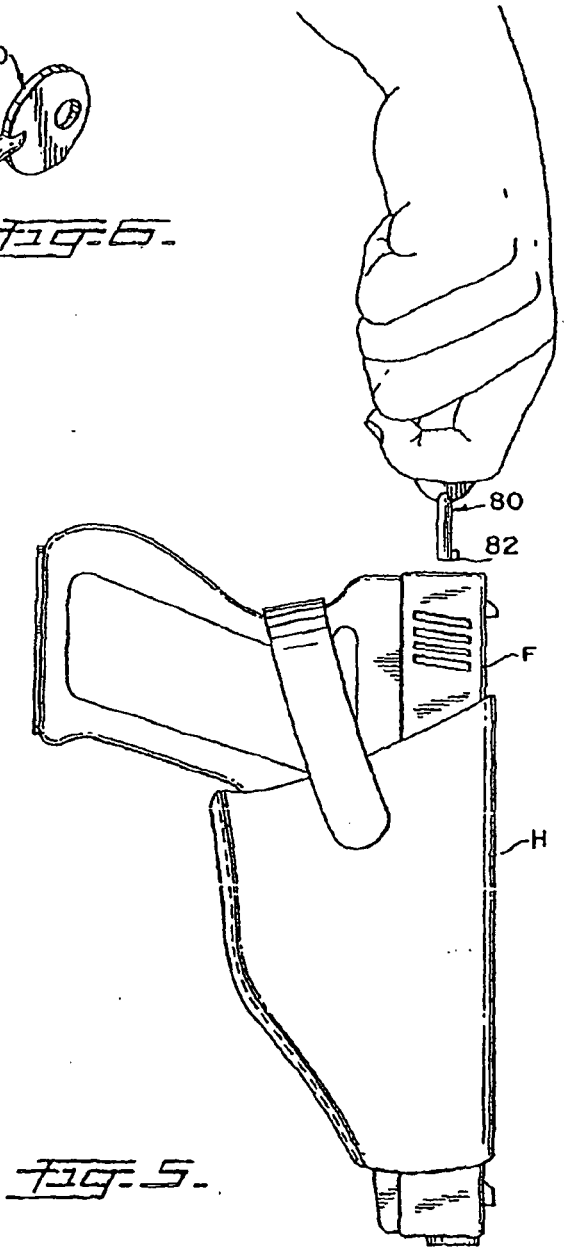

FIG. 5.

PR 0336

ET50514

FIRING PIN LOCKING SYSTEM

BACKGROUND OF THE INVENTION

1. Field of the Invention

The present invention relates to a turn-key locking mechanism for weapons, and more particularly, to an internal locking mechanism for firearms.

2. Description of the Related Art

Weapons and firearms are very dangerous. Many firearm locking mechanisms have been introduced to reduce the possibility of injury when unauthorized users discharge them, especially children. Presently, most firearms are manufactured with built-in safety mechanisms for triggers and firing pin assembles, as well as mechanisms to prevent discharge in the event of an accidental drop. However, there is a need to place firearms in an "unlocked" or "locked" mode notwithstanding the firearm in cocked or fired position. This would allow the authorized user to activate the firearm to "unlock" or deactivate the firearm to "locked" mode, even while set in a holster. There is a need for a practical and inexpensive assembly that can be incorporated into firearms without major structural changes to lock a firearm irrespective of the firearm status.

There are no similar internal locking mechanisms to the best of applicant's knowledge, that may be utilized to lock a firearm regardless of the firearm status, with a key that does not require movement of a firearm slide

SUMMARY OF THE INVENTION

It is one of the main objects of the present invention to provide an internal locking mechanism for firearms to lock the firing mechanism, regardless of the firearm status.

It is another object of the present invention to provide a key to set the firearm in a "unlocked" or "locked" mode even if the firearm is secured in a holster.

It is still another object of this invention to provide a locking mechanism for firearms that includes a key, an internal locking device and a slide cover key plate.

It is yet another object of this invention to provide a locking mechanism for firearms in which the internal locking mechanism is utilized as a means to prevent the movement of a firearm firing pin assembly when activated by the trigger mechanism, regardless of the firearm status.

It is still another object of the present invention to provide an internal locking mechanism utilized with semi automatic firearms that have an enclosed striker assembly.

It is yet another object of this invention to provide such a device that is inexpensive to manufacture and maintain while retaining its effectiveness.

Further objects of the invention will be brought out in the following part of the specification, wherein detailed description is for the purpose of fully disclosing the invention without placing limitations thereon.

BRIEF DESCRIPTION OF THE DRAWINGS

With the above and other related objects in view, the invention consists in the details of construction and combination of parts as will be more fully understood from the following description, when read in conjunction with the accompanying drawings in which:

FIG. 1 represents an exploded view of the internal locking mechanism in the unlocked mode.

FIG. 2a shows an elevational view of the slide cover key plate indicating the firearm is in the unlocked mode.

FIG. 2b shows an elevational view of the slide cover key plate indicating the firearm is in locked mode.

FIG. 2c shows an elevational view of the rear side of the slide cover key plate.

FIG. 3 illustrates an elevational view of a firearm in phantom showing the present invention in the cocked and locked position.

FIG. 4 illustrates an elevational view of a firearm in phantom showing the present invention in the fired and locked position.

FIG. 5 illustrates an elevational view of a firearm in a holster.

FIG. 6 illustrates a perspective view of a key.

DETAILED DESCRIPTION OF THE PREFERRED EMBODIMENT

Referring now to the drawings, where the present invention is generally referred to with numeral 10, it can be observed that it basically includes spacer sleeve assembly 30, key plate assembly 60, and key 80.

As seen in FIG. 1, firing pin assembly 20 slidably journals within longitudinal channel 51 of spacer sleeve assembly 30. Longitudinal channel 51 has fired notch 35, seen in FIG 3, cocked notch 41, and assembly notch 49.

Fired notch 35 is defined by side edge 36 establishing a parallel and spaced apart relationship between front edge 34 and rear edge 38 in the preferred embodiment. While firing leg 26 fills fired notch 35, firing leg 26 is biased against front edge 34 due to the spring force exerted by spring 24 against edge 32, seen in FIG. 3. Cocked notch 41 is defined by side edge 42 establishing a parallel and spaced apart relationship between front edge 40 and rear edge 44 in the preferred embodiment. While firing leg 26 fills cocked notch 41, firing leg 26 is biased against front edge 40 due to the spring force exerted by spring 24. Assembly notch 49 allows for assembly of firing pin assembly 20 onto spacer sleeve assembly 30. To insert firing pin assembly 20 within spacer sleeve assembly 30, end 25 of firing pin assembly 20 is inserted at a predetermined angle along longitudinal channel 51 of spacer sleeve assembly 30 without spring 24 and spring cups 23 and 23'. Ends 27 and 27' are respectively aligned with assembly notch 49, defined by side edges 48 and 48' establishing a parallel and spaced apart relationship between front edges 46 and 46' respectively and rear edge 50 in the preferred embodiment, seen in FIG. 3. Once received by spacer sleeve assembly 30, firing pin assembly leg 26 is slid against front edge 34 where spring 24 is placed over end 25 and retained by spring cups 23 and 23' against stopper surface 22, seen in FIG. 3.

Cylindrical spacer sleeve assembly 30 is manufactured from a durable material such as stainless steel, or a material of similar characteristics.

Key plate assembly 60 has exterior face 66 and interior face 68, seen in FIG. 2c. Key hole 64 allows access for an authorized user to trespass key plate assembly 60 with key 80. Key end 82 cooperatively fits into recess 57 of rear exterior surface 58 Through hole 62, provides notice when indicator 56 is properly aligned, indicating that the firearm is ready to discharge, as depicted in FIG. 2a. Additionally, through hole 62, provides notice when indicator 59 is properly aligned, indicating that the firearm is locked and will not discharge, as depicted in FIG 2b.

While in the unlocked mode, as presently depicted, firing leg 26 slidably journals within spacer sleeve assembly 30 biased against longitudinal edge 52. During operation of the

PR 0337

ET50515

firearm, firing pin leg 26 slidably journals along longitudinal channel 51, thus cycling between front edge 34 after the firearm is discharged to a predetermined distance approaching rear edge 44 when cocked.

Seen in FIG. 2*a* is a representation of slide cover key plate assembly 60 in the unlocked mode, as represented in FIG. 1. Indicator 56, seen through through-hole 62 is of sufficient contrast to exterior face 66, to allow an authorized user to visually determine that firearm F, seen in FIG. 3, is ready to discharge. Key hole 64 allows access of key 80, shown in FIG. 1.

Seen in FIG. 2*b* is a representation of slide cover key plate assembly 60 in the locked mode, as represented in FIG. 3. Indicator 59, seen through through-hole 62 is of sufficient contrast to exterior face 66, to allow an authorized user to visually determine that firearm F, seen in FIG. 3, is locked and will not discharge. Key hole 64 allows access of key 80, shown in FIG. 1.

Seen in FIG. 2*c* is a representation of the rear side of key plate assembly 60. Interior face 68 has recess 65 shaped to cooperatively receive rear exterior surface 58 of spacer sleeve assembly 30, seen in FIG. 1. Recess 65 has protrusions 63 axially mounted thereon having mating cooperative characteristics with recess 57 to provide notice to the user by way of a slight resistance when the user rotates spacer sleeve assembly 30 selectively from an unlocked mode, as seen in FIG. 2*a*, to a cocked and locked or fired and locked mode, as seen in FIG. 2*b*, and vice-a-versa. Firearm F, seen in FIG. 3, has a protrusion, not seen, that aligns with recess 67 for additional key plate assembly 60 stability.

As seen in FIG. 3, firearm F is in the cocked and locked position. An authorized user utilizes key 80, inserting it into key hole 64 of key plate assembly 60. Key 80 is shaped to cooperatively fit into recess 57, seen in FIG. 1, of spacer sleeve assembly 30. The user inserts key 80, then turns in a clockwise direction, thereby rotating spacer sleeve assembly 30 to a locked mode position wherefore firing pin assembly leg 26 rests in cocked notch 41, upon side edge 42, seen in FIG. 1, between front edge 40 and rear edge 44, thereby preventing the movement of firing pin assembly 20 when activated by trigger T of firearm F. To remove key 80, seen in FIG. 1, the user turns the key in a counter-clockwise direction until key end 82 is aligned with key hole 64 and removed. The user may acknowledge the locked position of firearm F, by viewing indicator 59 through through-hole 62 as seen in FIG. 2*b*.

When firearm F is in the unlocked mode, firing leg 26 slidably journals within spacer sleeve assembly 30 along longitudinal channel 51, biased against longitudinal edge 52. To place in the unlocked mode, the user inserts key 80, then turns in a counter-clockwise direction, thereby rotating spacer sleeve assembly 30 to an unlocked mode position, thereby allowing for the movement of firing pin assembly 20 when activated by trigger T of firearm F. To remove key 80, seen in FIG. 1, the user turns the key in a clockwise direction until key end 82 is aligned with key hole 64 and removed. The user may acknowledge the unlocked position of firearm F, by viewing indicator 56 through through-hole 62 as seen in FIG 2*a*

Firearm F may be of any variety of semi-automatic firearms that have an enclosed striker assembly. Such a firearm may be a "GLOCK", without limitation to this specific brand.

As seen in FIG. 4, firearm F is in the fired and locked position. Similar to the sequence performed when placing the firearm in a cocked and locked position, an authorized user utilizes key 80, inserting it into key hole 64 of key plate assembly 60. Key 80 is shaped to cooperatively fit into recess 57, as seen in FIG. 1, of spacer sleeve assembly 30. The user inserts key 80, then turns in a clockwise direction, thereby rotating spacer sleeve assembly 30 to a locked mode position wherefore firing pin assembly leg 26 rests in fired notch 35, upon side edge 36, seen in FIG. 1, between front edge 34 and rear edge 38, thereby preventing the movement of firing pin assembly 20 when activated by trigger T of firearm F. To remove key 80, seen in FIG. 1, the user turns the key in a counter-clockwise direction until key end 82 is aligned with key hole 64 and removed. The user may acknowledge the locked position of firearm F, by viewing indicator 59 through through-hole 62 as seen in FIG. 2*b*.

As seen in FIG. 5, firearm F is set in holster H. Without removing firearm F from holster H, the authorized user may place firearm F in an unlocked or locked mode.

As seen in FIG. 6, key 80 has key end 82. Key end 82 may be of any shape or design to complement recess 57 of spacer sleeve assembly 30 shown in FIG. 1.

The foregoing description conveys the best understanding of the objectives and advantages of the present invention. Different embodiments may be made of the inventive concept of this invention. It is to be understood that all matter disclosed herein is to be interpreted merely as illustrative, and not in a limiting sense.

What is claimed is:

1. An internal locking mechanism for firearms having an enclosed striker assembly, comprising:

A) a spacer sleeve assembly having first and second ends, between said first and second end a longitudinal channel, said longitudinal channel extending from a first predetermined distance from said first end towards said second end a second predetermined distance without reaching said second end, said longitudinal channel having third and fourth ends, includes a first notch closest to said third end, a second notch located at a third predetermined distance from said third end, and a third notch closest to said fourth end, said first end including a first recess;

B) a firing pin assembly having a shaft with fifth and sixth ends, said fifth end having a leg extending radially outwardly a fourth predetermined distance and said sixth end including a firing pin, said firing pin assembly further includes a stopper surface mounted at a fifth predetermined distance from said fifth end without reaching said sixth end and a spring member partially housing said shaft, said spring member includes seventh and eighth ends, said seventh end coacts against said second end that in turn coacts with said leg, keeping said spring biased towards said second end, said second end having cooperative dimensions to coact with said spring and selectively causing said spring member to compress against said stopper surface;

C) a key plate assembly having inner and outer walls, said key plate having a first through opening, said inner wall including a second recess with mating cooperative characteristics to receive said first end of said spacer sleeve assembly; and

D) means for rotating said spacer sleeve assembly through said first through opening so that said leg is selectively brought in alignment with said second or third notch thereby restricting the travel of said shaft, and in alignment with said longitudinal channel having unobstructed travel that permits the operation of said firearm.

PR 0338

ET50516

2. The internal locking mechanism for firearms having an enclosed striker assembly set forth in claim 1, wherein said means includes a key, insertable through said first through opening of said key plate to said first recess so that a user exerting an inwardly and rotational force, rotates said spacer sleeve assembly selectively from an unlocked mode to a cocked and locked or fired and locked mode and vice-a-versa.

3. The internal locking mechanism for firearms having an enclosed striker assembly set forth in claim 2, wherein said first end of said spacer sleeve assembly has at least one indicating mark.

4. The internal locking mechanism for firearms having an enclosed striker assembly set forth in claim 3, wherein said key plate assembly has a second through opening to allow for visual identification of said indicating mark

5. The internal locking mechanism for firearms having an enclosed striker assembly set forth in claim 2, wherein said second recess has at least one protrusion axially mounted thereon having mating cooperative characteristics with said first recess to provide notice when said user rotates said spacer sleeve assembly selectively from an unlocked mode to a cocked and locked or fired and locked mode and vice-a-versa.

6. The internal locking mechanism for firearms having an enclosed striker assembly set forth in claim 2, wherein said firearm may be placed locked or unlocked mode while in a holster regardless of whether said firearm is in a cocked or fired position

* * * * *

PR 0339

ET50517

Remington Arms Company, Inc.

Bolt-Action Bolt-Lock Safety Modification Program

Original guns – original parts ONLY!

Offer to Consumers the opportunity to convert their pre-1982 Bolt Lock Centerfire Guns to operate like a Post-1982 Bolt Action Centerfire Guns (in which it does not have to be in the "fire" postion to lift the bolt, the safety can be on.)

20 for 20 (plus shipping and handling)
$20 to fix and get a $20 coupon to use toward safety product

No matter how many guns, $20 for $20.

US and Canada – ONLY

Guns will have the same original parts unless we find a problem with the gun.
Trigger will be set back to original manufacturer setting.

Model 600, 660 and XP-100 Recall 1979 – only 30% of guns came in
(Pre-1982 bolt handle can never come up with bolt lock with safety on.)

If Model 600, 660 or XP-100 has the "V" on the trigger, the gun has been modified.

If they question about:

DuPont – no comment!

Hester – no comment!

Potential people to call in:

Tom Flynn – CBS

Kathleen O'Toole – Boseman Chronicle

John Robinson – Ran Class Action Lawsuit on Garza

Guns made after 1982 do not have a bolt-lock.

*If not the original owner – Always have the gun checked out by an authorized repair center.

IMPORTANT
READ THIS BOOK BEFORE USING THE FIREARM

INSTRUCTION BOOK
Model 700
Bolt Action,
Center Fire Rifle

Ce livret contient une version francaise.
Este libro incluye la versión en español.
Dieses Buch enthält die deutsche Fassung.

Bob

I WAS NOT GIVEN THESE PAGES BEFORE. THEY ARE OUR STANDARD 10 WARNINGS,

PR 0343

MODEL 700 CENTER FIRE RIFLE

Congratulations on your choice of a Remington. With proper care, it should give you many years of dependable use and enjoyment.

For best results, we recommend that you use Remington Ammunition – the ammunition used in factory testing your firearm against our exacting function and performance standards.

Picture 1

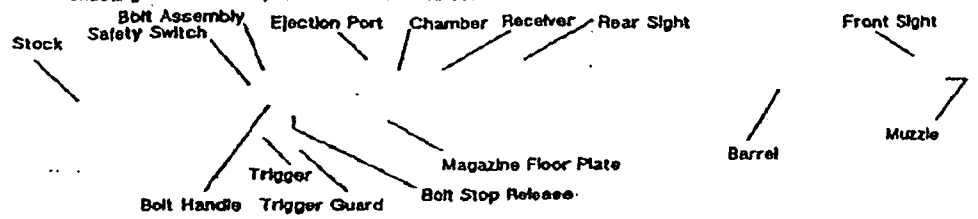

This picture shows the main parts of the REMINGTON MODEL 700 BOLT ACTION RIFLE. The picture will aid in understanding the instructions in this book.

Picture 2
Ammunition

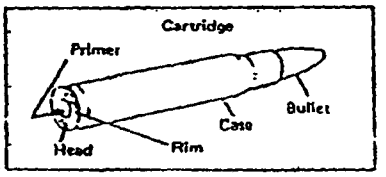

This picture shows the parts of the ammunition.

SAFETY RULES

WARNING

READ THESE BASIC SAFETY RULES. Learn how to handle your firearm safely. Failure to read, understand and obey these rules can result in serious personal injuries. Only you can prevent accidents.

KNOW YOUR FIREARM. To use it correctly and safely, read and follow the instructions in the enclosed firearm safety booklet and this instruction book. Copies are available free on request from Remington Arms Company, Inc.

TREAT EVERY FIREARM AS IF IT WERE LOADED. Don't rely on the safety switch. Use it as shown in this book. Even when the safety switch is engaged, careless handling can cause the firearm to fire. The safety switch may not actually be engaged; the internal mechanism may be altered, disabled or broken; or the safety switch may have become disengaged by careless handling of the firearm.

NEVER MAKE ADJUSTMENTS. Do not make changes or alterations to any parts of a firearm. Use only REMINGTON parts. Never make an adjustment to the trigger, or change the shape or size of the sear, sear notch, or other parts.

MAKE YOURSELF SAFE. Wear eye protection, such as eyeglasses, shooting glasses or sunglasses, when shooting. Wear ear protection, such as ear plugs or muffs, when target shooting or plinking. Repeated exposure to shooting noise can cause permanent hearing loss. The rare ruptured case or firearm malfunction may damage hearing or vision. Never shoot when your ability is impaired by alcohol or medication.

TAKE CARE OF YOUR FIREARM. Keep the barrel clean and free of obstructions. Clean and have the firearm checked periodically to make sure it is mechanically correct. Worn, damaged or missing parts may be dangerous.

WATCH YOUR MUZZLE. Always keep the firearm pointed in a safe direction.

SAFETY RULES

NEVER USE THE WRONG AMMUNITION. Only use ammunition that exactly matches the caliber or gauge markings on your firearm. Careless or incorrect handloading is dangerous. Improperly-made handloads may cause the barrel or breech of any hand-held firearm to burst, which can result in serious personal injury.

LOAD YOUR FIREARM SAFELY. Never load a firearm until you are in a location where it is safe to shoot, and you are ready to shoot.

KNOW YOUR TARGET. Before you pull the trigger, make sure you can see the target clearly, and the path of the bullet, slug, or shot charge beyond the target. Never shoot at water, rocks, or any hard surface. Bullets may glance off such surfaces and cause injuries.

KNOW THE RANGE OF YOUR FIREARM. Remember, shotgun pellets can travel 500 yards and shotgun slugs have a range of more than one-half mile. Rimfire bullets can travel more than 1 1/2 miles. Centerfire bullets can travel up to 5 miles.

IF FIREARM FAILS TO FIRE keep it pointed in a safe direction, then unload carefully avoiding exposure to breech. If firearm fires but report or recoil seems weak, unload and then make sure the barrel is not obstructed.

UNLOAD YOUR FIREARM WHENEVER YOU ARE NOT SHOOTING. Never carry or store a loaded firearm in a building or a vehicle. Unload your firearm before crossing or climbing up or down any obstacle that may prevent you from keeping full control over the firearm, such as a fallen tree, fence, tree stand, or slippery area.

STORE YOUR FIREARM SAFELY. Keep firearms and ammunition away from children. Lock unloaded firearms and ammunition securely in separate locations.

WARNING: Discharging firearms in poorly ventilated areas, cleaning firearms, or handling ammunition may result in exposure to lead, a substance known to cause birth defects, reproductive harm, and other serious physical injury. Have adequate ventilation at all times. Wash hands thoroughly after exposure.

IMPORTANT PARTS OF THE FIREARM

THE SAFETY SWITCH

The safety switch provides protection against accidental or unintentional discharge under normal usage when properly engaged and in good working order.

To engage the safety switch, put the switch in the 'S' position. See Picture 3.

Always put the safety switch in the 'S' position before handling, loading or unloading the firearm.

When you are ready to fire the firearm, put the safety switch in the 'F' position to disengage the safety switch. See Picture 4.

Do not touch the trigger while moving the safety switch.

Never pull the trigger when the safety switch is in the 'S' position.

WARNING: The firearm will fire when the trigger is pulled and the safety switch is in the 'F' position.

Even when the safety switch is in the 'S' position, careless handling can cause the firearm to fire. See Safety Rules on Page 2.

Picture 3

Picture 4

THE BOLT ASSEMBLY

The bolt assembly locks the cartridge into the chamber.

TO INSTALL THE BOLT ASSEMBLY:

1. Point the firearm in a safe direction.
2. Put the safety switch in the 'S' position.
3. Align the lugs on the bolt assembly with the receiver. See Picture 5.
4. Slide the bolt assembly into the receiver and push all the way in.
5. To place the bolt assembly in closed position, push the bolt handle down.

TO REMOVE THE BOLT ASSEMBLY:

1. Point the firearm in a safe direction.
2. Put the safety switch in the 'S' position.
3. Do not touch the trigger while moving the safety switch.
4. Raise the bolt handle.
5. Pull the bolt handle all the way back.
6. Push the bolt stop release. See Picture 5.
7. As you push the bolt stop release, slide the bolt from the firearm.

Picture 5

THE TRIGGER ASSEMBLY:

Pulling the trigger fires the firearm.

The trigger is adjusted at the factory. All adjustments to the trigger must be made by the factory or a REMINGTON RECOMMENDED GUNSMITH.

WARNING: NEVER remove the trigger mechanism, or make adjustments to the trigger or trigger assembly.

WARNING: NEVER put your finger on the trigger unless you are going to fire the firearm.

19710-1800
10.6
Trigger Assembly Check

RD-49-B

REMINGTON ARMS COMPANY, INC.

INTER-DEPARTMENTAL CORRESPONDENCE

Remington DUPONT PETERS DUPONT

"CONFINE YOUR LETTER TO ONE SUBJECT ONLY"

April 25, 1994

TO: SAM RENSI

FROM: KEN GREEN

Re: Weekly TAC Status - W/E 4/21/94

Progress continues to be good on this project. Larger group of newly identified owners has temporarily increased backlog of phone calls. Fifty percent of guns now accounted for.

KDG:tpp
att.

xc: Anne Cohen
Bob Lyman

PR 0349

TRIGGER ASSEMBLY CHECK (TAC)

WEEKLY PROGRESS REPORT - WEEK ENDING: 4/21/94

Telephone Data

- o We are averaging 58 calls per day on the incoming 800 lines.
- o Outgoing calls for the week averaged 96.2 calls per day.
- o Customers were reached on an average of 41.7 of the outgoing calls, or 43.4%.
- o Time per call is averaging 2.7 minutes/call.

Mailings

We have now sent 413 letters to people who could not be reached by telephone.

Check/Repair Data

- All firearms which could have been effectively checked in the field have now been checked, with 782 total guns being checked.
- Our in-house people now feel that all in-house guns have been checked.
- Arms Service has received 2969 guns and checked 2784 of the guns received.
- Overall Trigger Assembly replacement rate is at 19.8%.
- The attached TAC report breaks down details of TAC progress.

Personnel

There were no significant personnel issues or highlights.

Bob Lyman
R.K. Lyman

TRIGGER ASSEMBLY CHECK (TAC) REPORT - 4/21/94
(% = PERCENT OF TOTAL, 7193)

O FIREARMS SHIPPED:	7202	
O ORIGINAL SHIP POINT VERIFIED - PHONE CALLS TO 1ST SALES POINT:	6844	% 95.0
O NUMBER TO BE RETURNED AS A RESULT OF 1ST PHONE CALL:	775	% 10.8
O NUMBER TO BE RETURNED - CALLS TO 2ND SALES POINT:	3864	% 53.6
O TOTAL PROMISED TO BE RETURNED:	4639	% 64.4
O OUTSTANDING PHONE CALLS (DEALER LISTS OF CUSTOMERS RETURNED - 2ND SALES POINT CALLS NOW BEING MADE):	912	% 12.6
O LETTERS MUST BE SENT (REFUSED, ETC.)	106	% 1.5
O LETTERS SENT (NO PHONE, CAN'T REACH, ETC.):	413	% 5.7
O FIREARMS RECEIVED AT ILION:	2969	% 41.2
O FIREARMS CHECKED AT ILION:	2784	% 38.6
O FIREARMS CHECKED BY FIELD CONTRACTOR:	782	% 10.9
O TOTAL FIREARMS CHECKED:	3566	% 49.5
O FIREARMS NOT TO BE CHECKED (REFUSED, STOLEN, ETC):	41	% 0.5
~~O FIREARMS CHECKED/ACCOUNTED FOR:~~	~~3607~~	~~% 50.0~~
O FIREARMS REMAINING TO BE CHECKED:	3595	% 50.0
O FIREARMS REMAINING TO BE ACCOUNTED FOR (7193 MINUS PROMISED RETURNS, CHECKED BY FIELD CONTRACTOR, AND NOT TO BE CHECKED):	1740	% 24.2

Bob Lyman - 26.8

PR 0351

TRIGGER ASSEMBLY CHECK

FIREARMS ACCOUNTED FOR

(PROMISED RETURNS + CHECKED IN FIELD + NOT TO BE CHECKED)

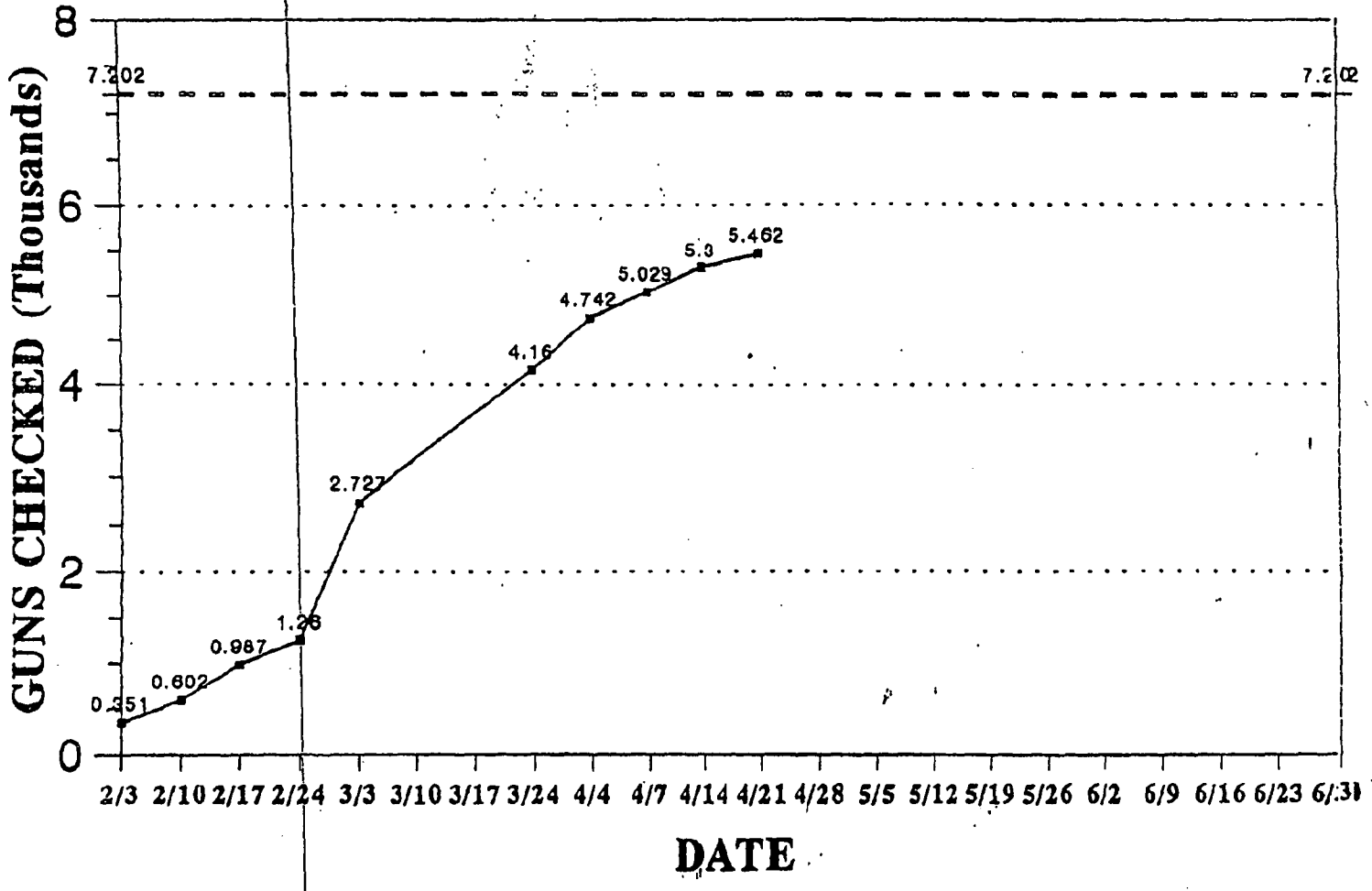

April 21, 1994

TRIGGER ASSEMBLY CHECK

FIREARMS CHECKED (ALL)

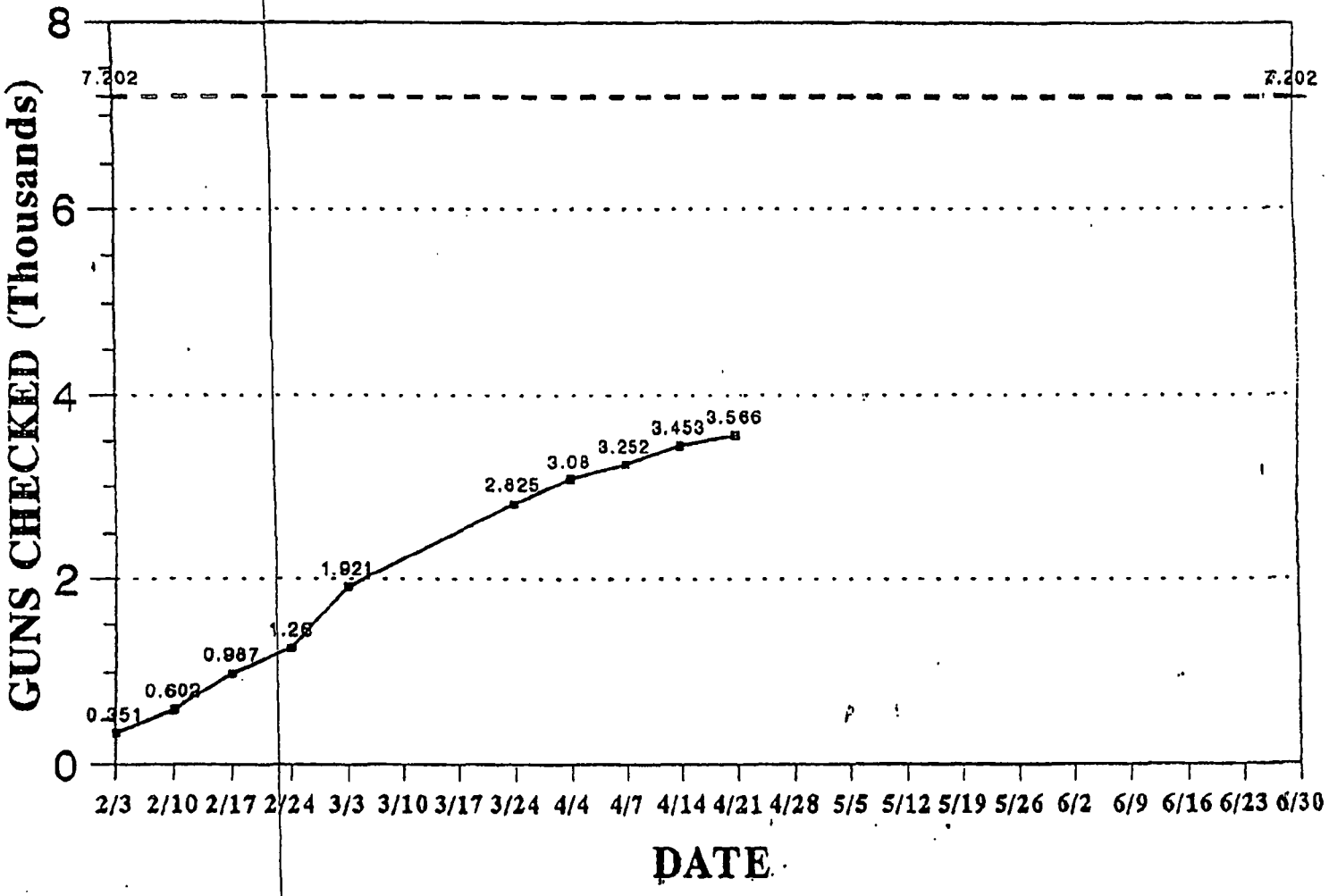

April 21, 1994

RD-69-B

REMINGTON ARMS COMPANY, INC.

INTER-DEPARTMENTAL CORRESPONDENCE

Remington DU PONT PETERS DU PONT

"CONFINE YOUR LETTER TO ONE SUBJECT ONLY"

April 25, 1994

Drawer w/ Ken

TO: SAM RENSI

FROM: KEN GREEN

Re: Weekly TAC Status - W/E 4/21/94

Progress continues to be good on this project. Larger group of newly identified owners has temporarily increased backlog of phone calls. Fifty percent of guns now accounted for.

KDG:tpp
att.

xc: Anne Cohen
Bob Lyman

VENDOR
Connecticut Spring
Burr on connector

Looking was serving - connectors were being produced that were thickening. Connecticut corrected thickening but left a burr. Recall guns made 6/1 Oct 1 Dec. 8 1983

Q. A. Purchase appr. Investigation
To be addressed

PR 0354

TRIGGER ASSEMBLY CHECK (TAC)

WEEKLY PROGRESS REPORT - WEEK ENDING: 4/21/94

Telephone Data

- o We are averaging 58 calls per day on the incoming 800 lines.
- o Outgoing calls for the week averaged 96.2 calls per day.
- o Customers were reached on an average of 41.7 of the outgoing calls, or 43.4%.
- o Time per call is averaging 2.7 minutes/call.

Mailings

We have now sent 413 letters to people who could not be reached by telephone.

Check/Repair Data

- All firearms which could have been effectively checked in the field have now been checked, with 782 total guns being checked.
- Our in-house people now feel that all in-house guns have been checked.
- Arms Service has received 2969 guns and checked 2784 of the guns received.
- Overall Trigger Assembly replacement rate is at 19.8%.
- The attached TAC report breaks down details of TAC progress.

Personnel

There were no significant personnel issues or highlights.

Bob Lyman
R.K. Lyman

26.4

TRIGGER ASSEMBLY CHECK (TAC) REPORT - 4/21/94
(% = PERCENT OF TOTAL, 7193)

0 FIREARMS SHIPPED:	7202	
0 ORIGINAL SHIP POINT VERIFIED - PHONE CALLS TO 1ST SALES POINT:	6844	% 95.0
0 NUMBER TO BE RETURNED AS A RESULT OF 1ST PHONE CALL:	775	% 10.8
0 NUMBER TO BE RETURNED - CALLS TO 2ND SALES POINT:	3864	% 53.6
0 TOTAL PROMISED TO BE RETURNED:	4639	% 64.4
0 OUTSTANDING PHONE CALLS (DEALER LISTS OF CUSTOMERS RETURNED - 2ND SALES POINT CALLS NOW BEING MADE):	912	% 12.6
0 LETTERS MUST BE SENT (REFUSED, ETC.)	106	% 1.5
0 LETTERS SENT (NO PHONE, CAN'T REACH, ETC.):	413	% 5.7
0 FIREARMS RECEIVED AT ILION:	2969	% 41.2
0 FIREARMS CHECKED AT ILION:	2784	% 38.6
0 FIREARMS CHECKED BY FIELD CONTRACTOR:	782	% 10.9
0 TOTAL FIREARMS CHECKED:	3566	% 49.5
0 FIREARMS NOT TO BE CHECKED (REFUSED, STOLEN, ETC):	41	% 0.5
~~0 FIREARMS CHECKED/ACCOUNTED FOR:~~	~~3607~~	~~% 50.0~~
0 FIREARMS REMAINING TO BE CHECKED:	3595	% 50.0
0 FIREARMS REMAINING TO BE ACCOUNTED FOR (7193 MINUS PROMISED RETURNS, CHECKED BY FIELD CONTRACTOR, AND NOT TO BE CHECKED):	1740	% 24.2

Bob Lyman - 26.8

PR 0356

TRIGGER ASSEMBLY CHECK

FIREARMS ACCOUNTED FOR

(PROMISED RETURNS + CHECKED IN FIELD + NOT TO BE CHECKED)

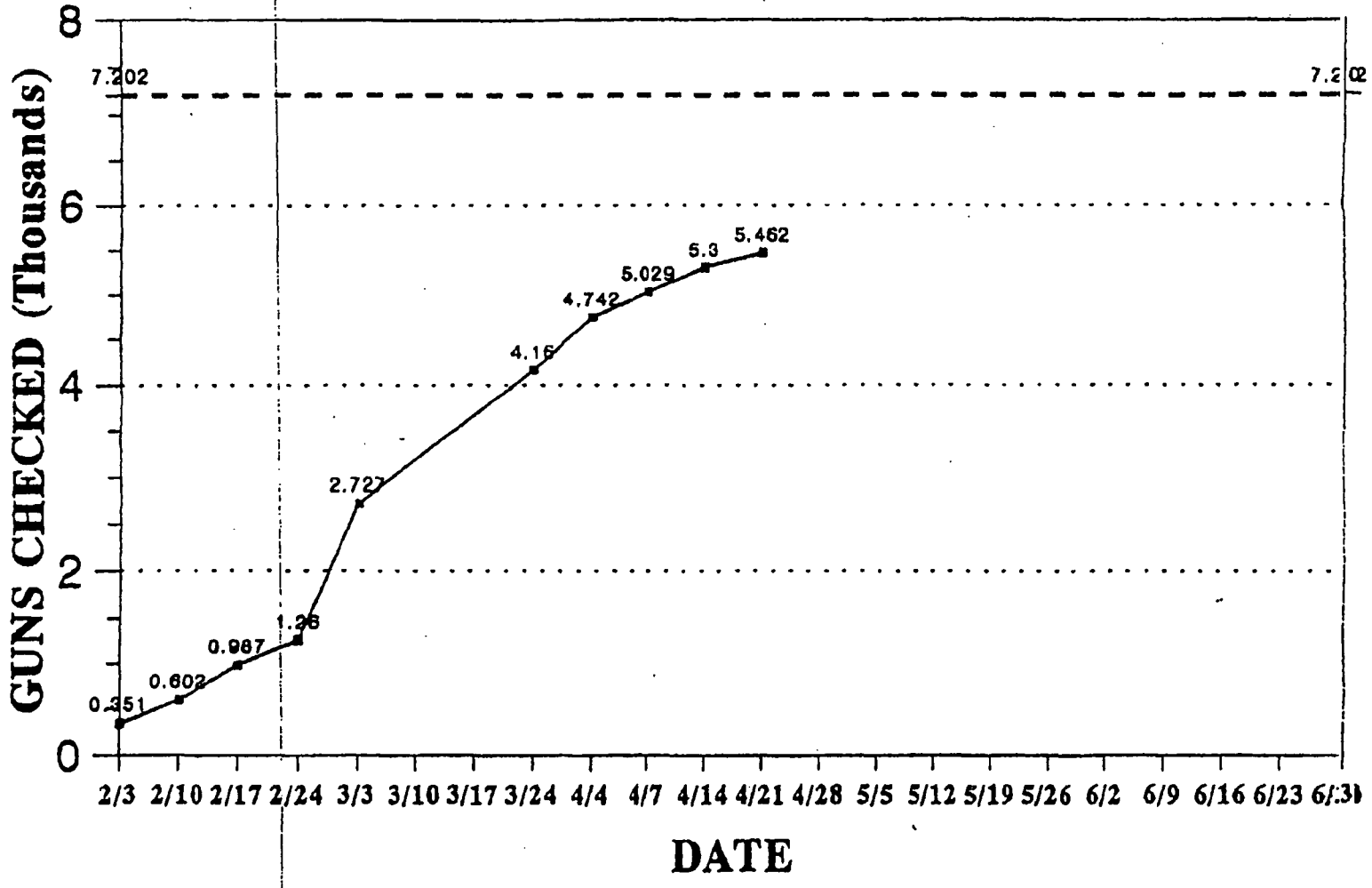

April 21, 1994

TRIGGER ASSEMBLY CHECK

FIREARMS CHECKED (ALL)

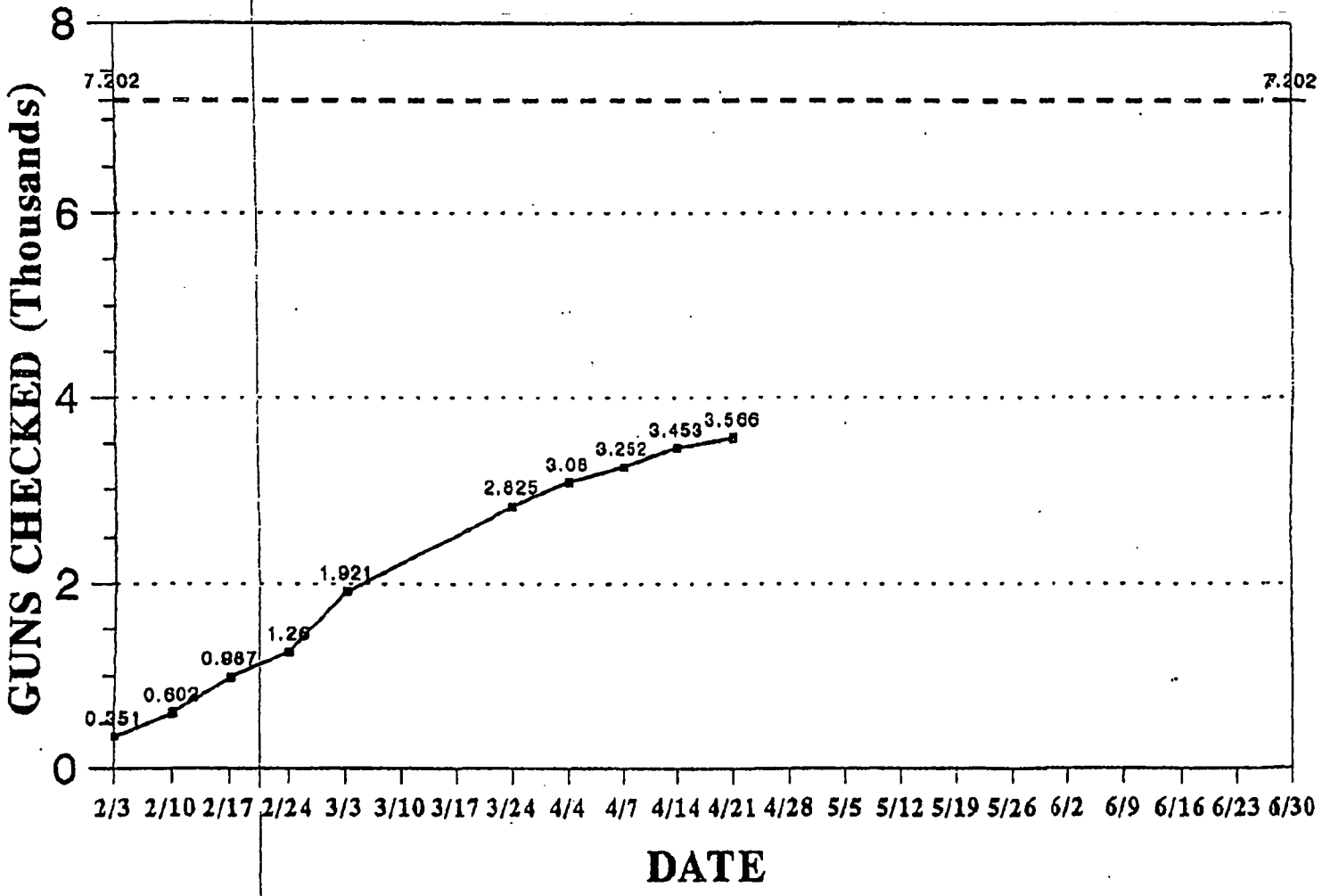

April 21, 1994

REMINGTON ARMS COMPANY, INC.

INTER-DEPARTMENTAL CORRESPONDENCE

Remington DU PONT PETERS DU PONT

"CONFINE YOUR LETTER TO ONE SUBJECT ONLY"

May 2, 1994

TO: SAM RENSI

FROM: KEN GREEN

RE: LEGAL ISSUES FOR PRODUCT SERVICE

Attached is a list of the legal issues for Product Service:

- Listing of our 1988 to-date recalls/call-backs. In addition, the M/3200 and M/600 recalls are still active.

- Trigger assembly check (TAC). This campaign concerns the trigger connector in the Model 700 rifle. The rifles affected total 7202. As of 5/2/94, 53.4 percent of the guns are accounted for. The campaign continues to make good progress.

INCLUDE A SAFETY ASPECTS FACTOR.

- Peerless connector check. We have identified the guns potentionally affected at 1075. This includes guns produced from Jan 1, 1994 to April 21, 1994. The retrieval campaign is well under way. Details of the retrieval are still being worked out.

- Computerized files. Product Service is computerizing all customer concerns received in the department. This includes all allegations of personal injury or property damage caused by our full-line products. In addition, presidential concerns and other generally unhappy customers will be included. Progress to date has been the acquisition of hardware and sofeware for the system. All 1988-1993 personal injury, presidential and property damage complaints have been input. Regular complaints are now being reviewed and entered.

KDG:tpp
att.

PR 0359

CONFIDENTIAL

OPEN PRODUCT RECALLS/CALL-BACKS

ACCOUNT NUMBER	DATE ANNOUNCED	TYPE	DESCRIPTION OF PRODUCT/PROBLEM	% COMPLETED (IF KNOWN)
100412	1/88	RECALL	700 TRIGGER ASSEMBLY (TARP)	97.4
100414	4/88	CALLBACK	N/66 CHAMBER (BARP JR.)	(?)
100415	2/88	CALLBACK	11-87/870 TRAP GUN/BBL. BORE	(?)
100418	10/88	CALLBACK	XP-100 INCOMPLETE OPERATION	98.9
100419	7/88	RECALL	SPOOBK AMMO POWDER PROBLEM	(?)
100425	11/89	RECALL	700 .17 CAL. BBL. PROBLEM	81.5
100431	3/90	CALLBACK	700 SOFT SEAR CAM	97.3
100432	3/90	CALLBACK	M/024 (SWS) SEAR PROBLEM	(?)
100433	4/90	CALLBACK	700 SOFT FIRING PIN HEAD	74.3
100451	3/92	CALLBACK	11-87 LIGHT CONTOUR BBL. WALLS	(?)
100453	7/92	CALLBACK	700 SS TRIGGER PROBLEM	97.5
100454	8/92	CALLBACK	700 SOFT FIRING PIN HEAD II	89.7
100457	12/92	RECALL	R243W3 AMMO POWDER PROBLEM	(?)
3401	1/94	CALLBACK	700 CONN. (TAC) PROBLEM	52.6
N/A	N/A	CALLBACK	M/320 PEERLESS CONNECTOR	0.

NOTE: There is also one case in pre-litigation which has potential liability. A man named Foster had 25-06 Cal. ammunition malfunction (blown primer) and received particles in his eye.

RKL
4/29/94
25.76

PR 0360

RD-00-B

REMINGTON ARMS COMPANY, INC.

INTER-DEPARTMENTAL CORRESPONDENCE

Remington DUPONT PETERS DUPONT

"CONFINE YOUR LETTER TO ONE SUBJECT ONLY"

May 3, 1994

TO: SAM RENSI
ANNE COHEN

FROM: KEN GREEN

RE: TAC STATUS AS OF 4/28/94

The attached status shows that we have fixed or accounted for more than 50% of the guns. Outgoing and incoming activity continues at a good pace.

KDG:tpp
att.

xc: Bob Haskins

PR 0361

TRIGGER ASSEMBLY CHECK (TAC) REPORT - 4/28/94
(% = PERCENT OF TOTAL, 7193)

0 FIREARMS SHIPPED:	7202	
0 ORIGINAL SHIP POINT VERIFIED - PHONE CALLS TO 1ST SALES POINT:	6844	% 95.0
0 NUMBER TO BE RETURNED AS A RESULT OF 1ST PHONE CALL:	775	% 10.8
0 NUMBER TO BE RETURNED - CALLS TO 2ND SALES POINT:	4085	% 56.7
0 TOTAL PROMISED TO BE RETURNED:	4860	% 67.5
0 OUTSTANDING PHONE CALLS (DEALER LISTS OF CUSTOMERS RETURNED - 2ND SALES POINT CALLS NOW BEING MADE):	1056	% 14.7
0 LETTERS MUST BE SENT (REFUSED, ETC.)	109	% 1.5
0 LETTERS SENT (NO PHONE, CAN'T REACH, ETC.):	432	% 6.0
0 FIREARMS RECEIVED AT ILION:	3099	% 43.0
0 FIREARMS CHECKED AT ILION:	3043	% 42.2
0 FIREARMS CHECKED BY FIELD CONTRACTOR:	727	% 10.1
0 TOTAL FIREARMS CHECKED:	3770	% 52.3
0 FIREARMS NOT TO BE CHECKED (REFUSED, STOLEN, ETC):	41	% 0.6
0 FIREARMS CHECKED/ACCOUNTED FOR:	3811	% 52.9
0 FIREARMS REMAINING TO BE CHECKED:	3391	% 47.1
0 FIREARMS REMAINING TO BE ACCOUNTED FOR (7193 MINUS PROMISED RETURNS, CHECKED BY FIELD CONTRACTOR, AND NOT TO BE CHECKED):	1574	% 21.8

Bob Lyman - 26.8

FIREARMS ACCOUNTED FOR.

(PROMISED RETURNS + CHECKED IN FIELD + NOT TO BE CHECKED)

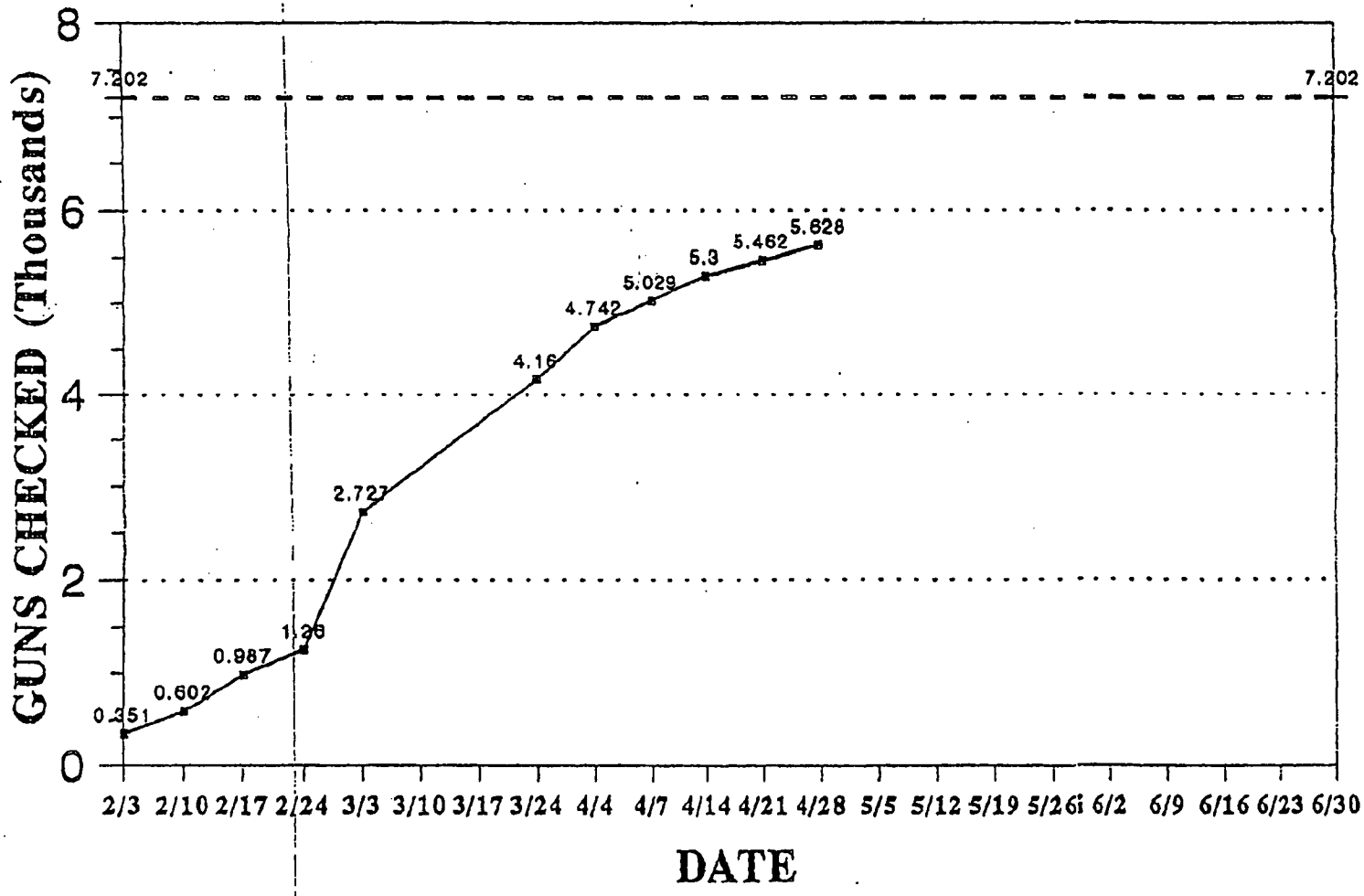

April 28, 1994

FIREARMS CHECKED (ALL)

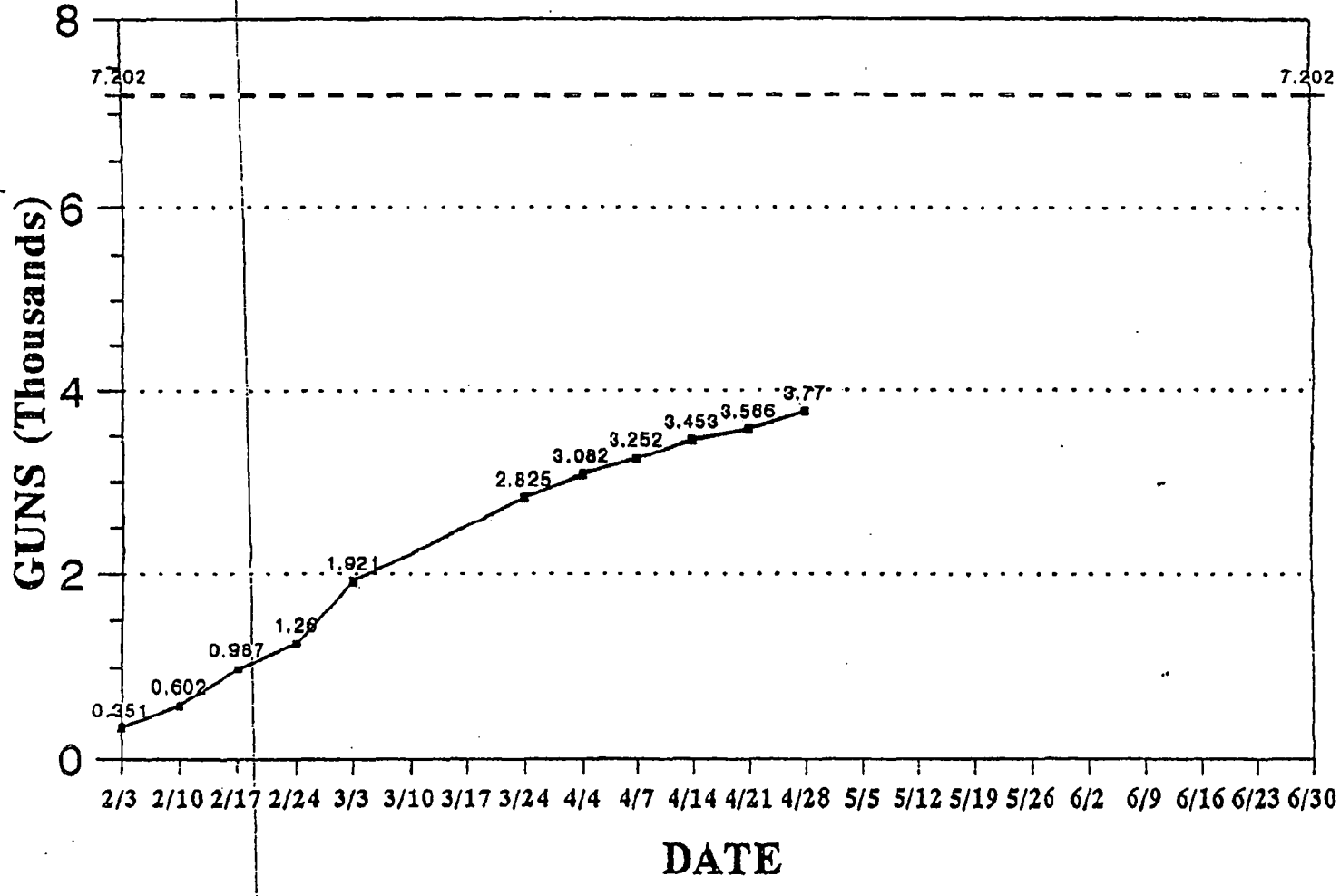

April 28, 1994

IGGER ASSEMBLY CHECK (TAC)

WEEKLY PROGRESS REPORT - WEEK ENDING: 4/28/94

Telephone Data

o We are averaging 46.2 calls per day on the incoming 800 lines.

o Outgoing calls for the week averaged 61.0 calls per day. Outgoing calls were down due to problems encountered attempting to secure customer lists from distributors/dealers who have not yet sent such lists.

o Customers were reached on an average of 52.6 of the outgoing calls, or 86.2%.

o Time per call is averaging 2.6 minutes/call.

Note: We have now received a computer run which lists all customers whose TAC firearms have not yet been sent to Remington for check/repair. In reviewing the numbers on this list versus the number of firearms customers have promised to return, we find that 32.2% of customers who promised to return their firearms for check have not yet done so.

Mailings

We have now sent 432 letters to people who could not be reached by telephone.

Check/Repair Data

- All firearms which could have been effectively checked in the field have now been checked, with 727 total guns being checked and 151 Trigger Assemblies being replaced, or 20.8%.

- In-house, 3290 firearms were checked and 558 Trigger Assemblies were replaced, or 17.0%. This total is not part of the TAC 7202 total.

- Arms Service has received 3099 guns and checked 3043 of the guns received. Trigger Assembly replacement rate is running at 24.7%.

- Overall Trigger Assembly replacement rate is at 20.8%.

- The attached TAC report breaks down details of TAC progress.

Personnel

There were no significant personnel issues or highlights.

Bob Lyman
R.K. Lyman

26.4

PR 0365

Remington®

QUALITY SERVICE: THE KEY TO CUSTOMER LOYALTY

Remington Arms Company, Inc.
Product Service Division
Ilion, New York - 13357
Fax (315) 895-3237
Tel. (315) 895-3477

DATE: 6-16-94 TIME: 10 30 A

TO: BOB HASKIN

(BLDG./ROOM NO.)

302 993-8611 FAX (PHONE)

FROM: KEN GREEN

(BLDG./ROOM NO.)

315 895 3407 (PHONE)

TOTAL NUMBER OF PAGES, INCLUDING THIS SHEET: 2

RECEIPT VERIFICATION CALL REQUIRED? (YES/NO)

COMMENTS: WE HAVE REACHED THE POINT WHERE PHONE CALLS ARE NOT PRODUCING ENOUGH RESPONSE. I SUGGEST WE START THE LETTER CAMPAIGN. PLEASE REVIEW DRAFT

Remington®

REMINGTON ARMS COMPANY, INC.

SPORTING ARMS-AMMUNITION-TARGETS-TRAPS

ILION, NEW YORK 13357

TELEPHONE (315) 895-3200

June 13, 1994

SAFETY NOTICE

Dear Remington Customer:

Remington has previously contacted you concerning a problem that may develop with your Model 700, Model Seven, or Model 40X rifle. The model and serial number of the involved rifle(s) is listed on the enclosed sheet.

You have not yet responded to our contacts by sending in your rifle(s). This safety notice is being sent to be sure you understand that your Model 700, Model Seven or Model 40X rifle must be sent back to the Remington factory so that we may inspect the Trigger Assembly for possible repair/replacement.

It is very important that the rifle is returned to our factory immediately. Please send (UPS, C.O.D.) the rifle to:

Remington Arms Company, Inc.
DEPT. DSV
14 Hoefler Ave
Ilion, NY 13357

Please mark the end flaps on the box: "Dept. DSV", which will insure that your rifle receives expedited service.

Remington wishes to be of service to you and prevent ~~you from being held liable for~~ any problem or injury that may be caused by your or other people's use of the rifle(s) described in this letter. Please help us be of service by either sending us the described rifle(s) or by calling our toll free number: 1-800-634-2459.

If you have already sent the rifle(s) to us, please disregard this notice and thank you for your cooperation.

Very Truly Yours,

Kenneth D. Green
Manager - Technical & Consumer Services

27.29

PR 0373

Remington®

QUALITY SERVICE: THE KEY TO CUSTOMER LOYALTY

Remington Arms Company, Inc.
Product Service Division
Ilion, New York – 13357
Fax (315) 895-3237
Tel. (315) 895-3477

DATE: 6-16-94 TIME: 10 30 A

TO: BOB HASKIN

(BLDG./ROOM NO.)

302 993-8611 FAX (PHONE)

FROM: KEN GREEN

(BLDG./ROOM NO.)

315 895 3407 (PHONE)

TOTAL NUMBER OF PAGES, INCLUDING THIS SHEET: 2

RECEIPT VERIFICATION CALL REQUIRED? (YES/NO)

COMMENTS: WE HAVE REACHED THE POINT WHERE PHONE CALLS ARE NOT PRODUCING ENOUGH RESPONSE. I SUGGEST WE START THE LETTER CAMPAIGN. PLEASE REVIEW DRAFT

TO BE APPROVED

Bob Lyman

REMIN ANY, INC.

Dear Remington Customer:

Remington has previously contacted you concerning a problem that may develop with your Model 700, Model Seven, or Model 40X rifle. The model and serial number of the involved rifle(s) is listed on the enclosed sheet.

You have not yet responded to our contacts by sending in your rifle(s). This safety notice is being sent to be sure you understand that if your Model 700, Model Seven or Model 40X rifle is loaded, the gun may accidently fire when you move the safety from the "safe" position to the "fire" position, or when you close the bolt.

It is very important that the rifle is returned to our factory immediately, so that we may inspect the rifle and replace the Trigger Assembly, if necessary. Please send (UPS C.O.D.) the rifle to:

Remington Arms Company, Inc.
DEPT. DSV
14 Hoefler Ave
Ilion, NY 13357

Please mark the end flaps on the box: "Dept. DSV", which will insure that your rifle receives expedited service.

Remington wishes to be of service to you and prevent you from being held liable for any problem or injury that may be caused by your or other people's use of the rifle(s) described in this letter. Please help us be of service by either sending us the described rifle(s) or by calling our toll free number: 1-800-634-2459.

If you have already sent the rifle(s) to us, please disregard this notice and thank you for your cooperation.

Very Truly Yours,

PR 0375

Kenneth D. Green
Manager - Technical & Consumer Services

27.29

PRIVILEGED & CONFIDENTIAL
ATTORNEY/CLIENT COMMUNICATION

September 1, 1994

TO: R. HASKIN

FROM: K. KEN

RE: MULTI-LINGUAL INSTRUCTION BOOK

It has been decided to put a multi-lingual instruction book in most of our gun boxes. The first application is for the detachable magazine M/700. I have reviewed the text for the English version which is basically a repeat of our existing 700 book with additions to cover the detachable magazine. Smart Communications of New York City prepared the translations of French, German and Spanish.

Blue proofs are due at Ilion shortly. Upon approval, the printer can give us books quickly so we can warehouse the guns.

Please review the English version to see if we need to correct any gross errors. In addition, do we need to have someone else review the translated versions?

KDG:tpp

xc: S. Rensi

PR 0380

IMPORTANT
READ THIS BOOK BEFORE USING THE FIREARM

INSTRUCTION BOOK
Model 700
Bolt Action,
Center Fire Rifle

Ce livret contient une version française.
Este libro incluye la versión en español.
Dieses Buch enthält die deutsche Fassung.

Bob

I WAS NOT GIVEN THESE PAGES BEFORE. THEY ARE OUR STANDARD 10 WARNINGS,

PR 0381

MODEL 700 CENTER FIRE RIFLE

Congratulations on your choice of a Remington. With proper care, it should give you many years of dependable use and enjoyment.

For best results, we recommend that you use Remington Ammunition – the ammunition used in factory testing your firearm against our exacting function and performance standards.

Picture 1

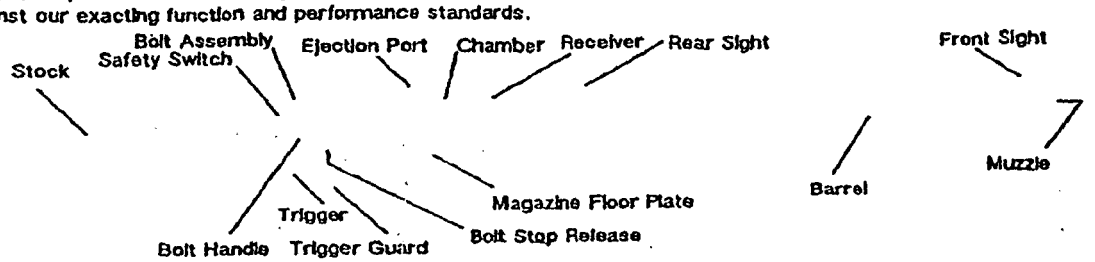

This picture shows the main parts of the REMINGTON MODEL 700 BOLT ACTION RIFLE. The picture will aid in understanding the instructions in this book.

Picture 2
Ammunition

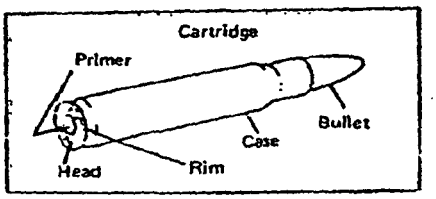

This picture shows the parts of the ammunition.

SAFETY RULES

WARNING

READ THESE BASIC SAFETY RULES. Learn how to handle your firearm safely. Failure to read, understand and obey these rules can result in serious personal injuries. Only you can prevent accidents.

KNOW YOUR FIREARM. To use it correctly and safely, read and follow the instructions in the enclosed firearm safety booklet and this instruction book. Copies are available free on request from Remington Arms Company, Inc.

TREAT EVERY FIREARM AS IF IT WERE LOADED. Don't rely on the safety switch. Use it as shown in this book. Even when the safety switch is engaged, careless handling can cause the firearm to fire. The safety switch may not actually be engaged; the internal mechanism may be altered, disabled or broken; or the safety switch may have become disengaged by careless handling of the firearm.

NEVER MAKE ADJUSTMENTS. Do not make changes or alterations to any parts of a firearm. Use only REMINGTON parts. Never make an adjustment to the trigger, or change the shape or size of the sear, sear notch, or other parts.

MAKE YOURSELF SAFE. Wear eye protection, such as eyeglasses, shooting glasses or sunglasses, when shooting. Wear ear protection, such as ear plugs or muffs, when target shooting or plinking. Repeated exposure to shooting noise can cause permanent hearing loss. The rare ruptured case or firearm malfunction may damage hearing or vision. Never shoot when your ability is impaired by alcohol or medication.

TAKE CARE OF YOUR FIREARM. Keep the barrel clean and free of obstructions. Clean and have the firearm checked periodically to make sure it is mechanically correct. Worn, damaged or missing parts may be dangerous.

WATCH YOUR MUZZLE. Always keep the firearm pointed in a safe direction.

SAFETY RULES

NEVER USE THE WRONG AMMUNITION. Only use ammunition that exactly matches the caliber or gauge markings on your firearm. Careless or incorrect handloading is dangerous. Improperly-made handloads may cause the barrel or breech of any hand-held firearm to burst, which can result in serious personal injury.

LOAD YOUR FIREARM SAFELY. Never load a firearm until you are in a location where it is safe to shoot, and you are ready to shoot.

KNOW YOUR TARGET. Before you pull the trigger, make sure you can see the target clearly, and the path of the bullet, slug, or shot charge beyond the target. Never shoot at water, rocks, or any hard surface. Bullets may glance off such surfaces and cause injuries.

KNOW THE RANGE OF YOUR FIREARM. Remember, shotgun pellets can travel 500 yards and shotgun slugs have a range of more than one-half mile. Rimfire bullets can travel more than 1 1/2 miles. Centerfire bullets can travel up to 5 miles.

IF FIREARM FAILS TO FIRE keep it pointed in a safe direction, then unload carefully avoiding exposure to breech. If firearm fires but report or recoil seems weak, unload and then make sure the barrel is not obstructed.

UNLOAD YOUR FIREARM WHENEVER YOU ARE NOT SHOOTING. Never carry or store a loaded firearm in a building or a vehicle. Unload your firearm before crossing or climbing up or down any obstacle that may prevent you from keeping full control over the firearm, such as a fallen tree, fence, tree stand, or slippery area.

STORE YOUR FIREARM SAFELY. Keep firearms and ammunition away from children. Lock unloaded firearms and ammunition securely in separate locations.

WARNING: Discharging firearms in poorly ventilated areas, cleaning firearms, or handling ammunition may result in exposure to lead, a substance known to cause birth defects, reproductive harm, and other serious physical injury. Have adequate ventilation at all times. Wash hands thoroughly after exposure.

IMPORTANT PARTS OF THE FIREARM

THE SAFETY SWITCH

The safety switch provides protection against accidental or unintentional discharge under normal usage when properly engaged and in good working order.

To engage the safety switch, put the switch in the 'S' position. See Picture 3.

Always put the safety switch in the 'S' position before handling, loading or unloading the firearm.

When you are ready to fire the firearm, put the safety switch in the 'F' position to disengage the safety switch. See Picture 4.

Do not touch the trigger while moving the safety switch.

Never pull the trigger when the safety switch is in the 'S' position.

WARNING: The firearm will fire when the trigger is pulled and the safety switch is in the 'F' position.

Even when the safety switch is in the 'S' position, careless handling can cause the firearm to fire. See Safety Rules on Page 2.

Picture 3

Picture 4

THE BOLT ASSEMBLY

The bolt assembly locks the cartridge into the chamber.

TO INSTALL THE BOLT ASSEMBLY:

1. Point the firearm in a safe direction.
2. Put the safety switch in the 'S' position.
3. Align the lugs on the bolt assembly with the receiver. See Picture 5.
4. Slide the bolt assembly into the receiver and push all the way in.
5. To place the bolt assembly in closed position, push the bolt handle down.

TO REMOVE THE BOLT ASSEMBLY:

1. Point the firearm in a safe direction.
2. Put the safety switch in the 'S' position.
3. Do not touch the trigger while moving the safety switch.
4. Raise the bolt handle.
5. Pull the bolt handle all the way back.
6. Push the bolt stop release. See Picture 5.
7. As you push the bolt stop release, slide the bolt from the firearm.

Picture 5

THE TRIGGER ASSEMBLY:

Pulling the trigger fires the firearm.

The trigger is adjusted at the factory. All adjustments to the trigger must be made by the factory or a REMINGTON RECOMMENDED GUNSMITH.

WARNING: NEVER remove the trigger mechanism, or make adjustments to the trigger or trigger assembly.

WARNING: NEVER put your finger on the trigger unless you are going to fire the firearm.

PRIVILEGED & CO. IDENTIAL
ATTORNEY/CLIENT COMMUNICATION

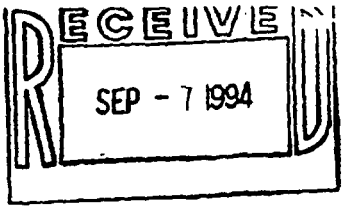

September 1, 1994

TO: R. HASKIN

FROM: K. KEN

RE: MULTI-LINGUAL INSTRUCTION BOOK

It has been decided to put a multi-lingual instruction book in most of our gun boxes. The first application is for the detachable magazine M/700. I have reviewed the text for the English version which is basically a repeat of our existing 700 book with additions to cover the detachable magazine. Smart Communications of New York City prepared the translations of French, German and Spanish.

Blue proofs are due at Ilion shortly. Upon approval, the printer can give us books quickly so we can warehouse the guns.

Please review the English version to see if we need to correct any gross errors. In addition, do we need to have someone else review the translated versions?

KDG:tpp

xc: S. Rensi

missing pages 1-3

PR 0387

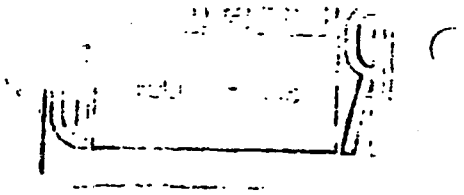

PR 0388

IMPORTANT PARTS OF THE FIREARM

THE SAFETY SWITCH

The safety switch provides protection against accidental or unintentional discharge under normal usage when properly engaged and in good working order.

To engage the safety switch, put the switch in the 'S' position. See Picture 3.

Always put the safety switch in the 'S' position before handling, loading or unloading the firearm.

When you are ready to fire the firearm, put the safety switch in the 'F' position to disengage the safety switch. See Picture 4.

Do not touch the trigger while moving the safety switch.

Never pull the trigger when the safety switch is in the 'S' position.

WARNING: The firearm will fire when the trigger is pulled and the safety switch is in the 'F' position.

Even when the safety switch is in the 'S' position, careless handling can cause the firearm to fire. See Safety Rules on Page 2.

Picture 3

Picture 4

THE BOLT ASSEMBLY

The bolt assembly locks the cartridge into the chamber.

TO INSTALL THE BOLT ASSEMBLY:

1. Point the firearm in a safe direction.
2. Put the safety switch in the 'S' position.
3. Align the lugs on the bolt assembly with the receiver. See Picture 5.
4. Slide the bolt assembly into the receiver and push all the way in.
5. To place the bolt assembly in closed position, push the bolt handle down.

TO REMOVE THE BOLT ASSEMBLY:

1. Point the firearm in a safe direction.
2. Put the safety switch in the 'S' position.
3. Do not touch the trigger while moving the safety switch.
4. Raise the bolt handle.
5. Pull the bolt handle all the way back.
6. Push the bolt stop release. See Picture 5.
7. As you push the bolt stop release, slide the bolt from the firearm.

Picture 5

THE TRIGGER ASSEMBLY:

Pulling the trigger fires the firearm.

The trigger is adjusted at the factory. All adjustments to the trigger must be made by the factory or a REMINGTON RECOMMENDED GUNSMITH.

WARNING: NEVER remove the trigger mechanism, or make adjustments to the trigger or trigger assembly.

WARNING: NEVER put your finger on the trigger unless you are going to fire the firearm.

THE BARREL

The inside of the barrel must be clean and free of obstructions.

I. TO CHECK THE INSIDE OF THE BARREL:

1. Point the firearm in a safe direction.
2. Put the safety switch in the 'S' position.
3. Raise the bolt handle.
4. Pull the bolt all the way back.
5. Remove any ammunition from the chamber or magazine. See Page 8.
6. Remove the bolt. See Page 5.
7. Look through the inside of the barrel from the chamber end to the muzzle. See Picture 1.

II. TO REMOVE OBJECT FROM INSIDE THE BARREL:

1. Use the correct size cleaning rod.
2. Push the cleaning rod from the chamber end all the way through the barrel, until the rod comes out of the muzzle.
3. If an object cannot be easily pushed out of the barrel with a cleaning rod, return the firearm to the factory or a REMINGTON RECOMMENDED GUNSMITH.

WARNING: NEVER try to remove an object from the barrel by loading another cartridge and firing. This may cause the barrel to burst or a cartridge case to rupture and cause serious personal injury.

III. TO CLEAN THE BARREL FOLLOW INSTRUCTIONS SHOWN ON PAGE 10.

Before loading the firearm, make sure the inside of the barrel is free of dirt or other obstructions.

SPECIAL NOTICE

MODEL 700 .220 SWIFT LOADING INSTRUCTIONS

Unlike other cartridges which are chambered in the Model 700, the .220 SWIFT is a semi-rimmed cartridge. Therefore, to ensure proper feeding, make sure that the rim of the top cartridge is ahead of the rim of the cartridge below.

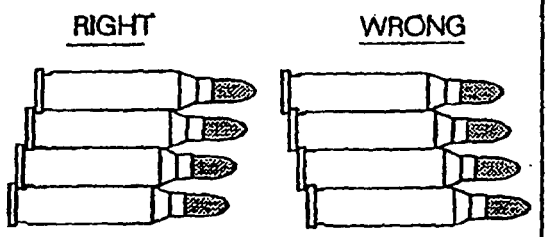

TO LOAD THE FIREARM

There are three types of Model 700 rifles: one with a FLOOR PLATE, one without a FLOOR PLATE and one with a DETACHABLE MAGAZINE BOX.

I. TO LOAD ONE CARTRIDGE ONLY:

1. Point the firearm in a safe direction.
2. Put the safety switch in the 'S' position.
3. Raise the bolt handle.
4. Pull the bolt handle all the way back.
5. Put one cartridge of the correct caliber on the magazine follower or in the chamber. See Picture 6.
6. Slide the bolt handle forward, then push the bolt handle down to lock the cartridge into the chamber.

THE FIREARM IS NOW LOADED.

7. To fire the firearm put the safety switch in the 'F' position.

THE FIREARM IS READY TO FIRE.

II. TO LOAD THE CHAMBER AND MAGAZINE:

1. Point the firearm in a safe direction.
2. Put the safety switch in the 'S' position.
3. Raise the bolt handle.
4. Pull the bolt handle all the way back.
5. Push four cartridges of the correct caliber, one at a time, into the magazine. If the firearm is a magnum, you can only load three cartridges. If the firearm is a 17, 222, or 223 caliber, the magazine will hold five cartridges. Keep the bullets aligned toward the chamber. See Picture 6.
6. Put one cartridge into the chamber.
7. Use your fingers to push the cartridges in the magazine all the way down. Slowly slide the bolt assembly forward, so that the bolt slides over the top of the cartridges in the magazine.
8. Push the bolt handle down.

THE CHAMBER AND MAGAZINE ARE NOW FULLY LOADED.

9. To fire the firearm put the safety switch in the 'F' position.

THE FIREARM IS READY TO FIRE.

WARNING: Always check the cartridge for the correct caliber before loading the firearm.

Picture 6

ALTERNATE METHOD TO LOAD THE CHAMBER AND MAGAZINE: (FOR MODEL 700 WITH A DETACHABLE MAGAZINE BOX)

1. Point the firearm in a safe direction.
2. Put the safety switch in the 'S' position.
3. Raise the bolt handle.
4. Pull the bolt handle all the way back.
5. Press both magazine latches inward and pull the magazine box from the firearm. See Picture 7.
6. Push four cartridges of the correct caliber, one at a time, into the magazine box, pushing the cartridges to the rear of the magazine. If the firearm is a magnum, you can only load three cartridges. Keep the bullets aligned toward the chamber. See Picture 7.
7. Place the magazine box into the trigger guard opening and push it until both latches snap into the fully latched position.

THE MAGAZINE IS NOW FULLY LOADED.

8. Put one cartridge of the correct caliber into the chamber. See Picture 6.
9. Use your fingers to push the cartridges in the magazine box all the way down. Slowly slide the bolt assembly forward, so that the bolt assembly slides over the top of the cartridges in the magazine box.
10. Push the bolt handle down to lock the cartridge into the chamber.

THE CHAMBER AND MAGAZINE ARE NOW FULLY LOADED.

11. To fire the firearm put the safety switch in the 'F' position.
THE FIREARM IS READY TO FIRE.

WARNING: Always check the cartridge for the correct caliber before loading the firearm.

Picture 7

TO UNLOAD THE FIREARM

There are three types of Model 700 rifles: one with a FLOOR PLATE, one without a FLOOR PLATE and one with a DETACHABLE MAGAZINE BOX.

INSTRUCTIONS FOR THE MODELS WITH A FLOOR PLATE:

1. Point the muzzle of the firearm in a safe direction.
2. Put the safety switch in the 'S' position.
3. Raise the bolt handle.
4. Put one hand over the top of the ejection port.
5. Slowly pull the bolt handle back with your other hand to remove the cartridge from the chamber.
6. Hold cartridge and remove it from the firearm.
7. Put your hand under the floor plate.

8. Push the floor plate latch to release the floor plate. See Picture 8. The magazine spring and follower will be released from the magazine.

Picture 8

9. Remove released cartridges.
10. Push in the magazine follower, then close the floor plate.

WARNING: Check the chamber and the magazine to make sure there are no cartridges in the firearm.

INSTRUCTIONS FOR THE MODELS WITHOUT A FLOOR PLATE:

1. Repeat Steps 1 through 6 above.
2. Keep the muzzle pointed in a safe direction. Push the bolt handle slowly forward until a cartridge is released from the magazine. CAUTION: The cartridge may slide into the chamber if the bolt is pushed too far forward. See Note below.
3. Pull the bolt handle fully back and remove the cartridge from the ejection port.
4. Repeat Steps 2 and 3 until the magazine is empty.

WARNING: Check the chamber and the magazine to make sure there are no cartridges in the firearm.

NOTE: If the bolt is pushed all the way forward, and a cartridge slides into the chamber, the gun can be fired. Normally, the cartridges will slide out of the chamber when the bolt is pulled back. If the cartridge remains in the chamber, point the muzzle in a safe direction, slide the bolt forward all the way and push the bolt handle down to close the bolt. Then repeat Steps 1 through 4 above.

INSTRUCTIONS FOR THE MODELS WITH A DETACHABLE MAGAZINE BOX:

1. Point the firearm in a safe direction.
2. Put the safety switch in the 'S' position.
3. Raise the bolt handle.
4. Put one hand over the top of the ejection port.
5. Slowly pull the bolt handle back with your other hand to remove the cartridge from the chamber.
6. Press both magazine latches inward and pull the magazine box from the firearm. See Picture 7.
7. Remove the cartridges from the magazine box.
8. Replace the magazine box.

WARNING: Check the chamber and the magazine box to make sure there are no cartridges in the firearm.

TO ADJUST THE SIGHTS

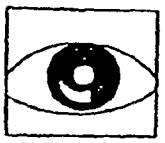

All models with sights are adjusted at the factory to hit a target at 100 yards.

TO ADJUST ~~THE REAR~~ SIGHT:

Move the rear sight in the same direction as you need, to move the bullet on the target.

Picture 9

NOTE: For more information on ballistics and trajectory, see the REMINGTON catalog.

TELESCOPIC SIGHTS:
The top of the receiver has holes for the installation of telescopic sights.

POSITION ON TARGET	ADJUSTMENTS
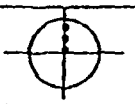 Bullet hits above the center.	a. Loosen the elevation screw on the rear sight. b. Slide the rear sight down (backward) on the ramp. c. Tighten the elevation screw.
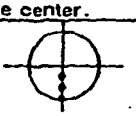 Bullet hits below the center.	a. Loosen the elevation screw on the rear sight. b. Slide the rear sight up (forward) on the ramp. c. Tighten the elevation screw.
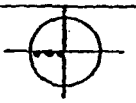 Bullet hits to the left.	a. Loosen the windage screw on the rear sight. b. Slide the rear sight aperture to the right. c. Tighten the windage screw.
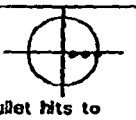 Bullet hits to the right.	a. Loosen the windage screw on the rear sight. b. Slide the rear sight aperture to the left. c. Tighten the windage screw.

Q. opposite direction
i.e. If shooting to the right
move rear site to the left
(if need to move bullet to the left.
move rear sight to the ~~right~~ left.

LUBRICATION AND MAINTENANCE

LUBRICATION:
Over-lubrication should be avoided at all times. A thin coat of Rem™ Oil helps to prevent rusting. See Note below.

When the firearm is to be stored, it should be carefully cleaned and thoroughly oiled. Outside surfaces should be wiped with a light coat of Rem™ Oil occasionally.

When firearm is to be reused, all excess lubrication must be removed. The chamber and bore must be thoroughly wiped dry.

NOTE: Remington Rem™ Oil with DuPont Teflon® Wet Lubricant is available from your local dealer. If your dealer is out of stock, ask him to order Rem™ Oil from his Remington distributor.

TO CLEAN THE BARREL:

WARNING: Check the chamber and magazine to make sure there are no cartridges in the firearm.

1. Use the equipment provided in a good cleaning kit. For recommendations, see your Remington Authorized Gunsmith.
2. Remove the bolt assembly. See instructions on Page 5.
3. Select the correct caliber cleaning brush and attach the brush to the cleaning rod.
4. Put the cleaning brush into the gun cleaning solvent.

NOTE: Barrel should lay horizontally with the ejection port facing down during cleaning. Always clean the barrel from the chamber end to the muzzle.

5. Push the cleaning brush through the barrel several times.
6. Remove brush from rod, attach tip with patch, and push through the bore.
7. Repeat several times, using a new cleaning patch each time, until the patch is not dirty.
8. Push a clean patch saturated with Rem™ Oil through the barrel.
9. Push a clean dry patch through the barrel to remove excess lubricant.
10. Apply a thin coat of Rem™ Oil to the outside of the barrel with a soft clean cloth.
11. After cleaning the barrel, clean the receiver and the trigger assembly.

WARNING: This firearm should be checked periodically by the Remington Arms Company, Inc. or a REMINGTON RECOMMENDED GUNSMITH. This will ensure proper inspection and any necessary replacement of worn or damaged parts.

TO CLEAN THE RECEIVER AND TRIGGER ASSEMBLY:

1. Put the safety switch in the 'S' position.
2. Remove the bolt assembly. See instructions on Page 5.
3. Turn the rifle upside down.
4. Remove the screws from the trigger guard. See Picture 10.

Picture 10

5. Lift the stock away from the receiver and trigger assembly.

MODELS WITHOUT A FLOOR PLATE ONLY:

Remove the magazine spring and follower from the receiver.

NOTE: Clean the receiver and trigger assembly as a unit with Rem™ Oil.

6. Spray the receiver and the four points of the trigger assembly with Rem™ Oil. See Picture 11. Let stand for 15 minutes. Spray again to wash off the components. Shake off excess lubricant.

Picture 11

WARNING: Excessive use of a non-recommended lubricant could cause serious function problems possibly leading to accidental firing.

TO ASSEMBLE MODELS WITHOUT A FLOOR PLATE:

1. Put the magazine follower and the spring into the magazine.
2. Put the stock over the receiver and trigger assembly.
3. Replace and tighten the screws on the trigger guard.

WARNING: Before you replace the bolt asssembly, make sure the barrel is free of obstructions.

4. Replace the bolt assembly. See Instructions on Page 5.

TO ASSEMBLE MODELS WITH A FLOOR PLATE ONLY:

Put the magazine all the way into the bottom of the receiver.

MODELS WITH FLOOR PLATE OR DETACHABLE MAGAZINE:

1. Assemble the trigger guard assembly on the stock.
2. Put the stock over the receiver and trigger assembly.
3. Replace and tighten the trigger guard screws.
4. Close the floor plate or replace detachable magazine.

WARNING: Before you replace the bolt assembly, make sure the barrel is free of obstructions.

5. Replace the bolt assembly. See Instructions on Page 5.

WARNING: After cleaning the trigger assembly, check the chamber and magazine to make sure there are no cartridges in the firearm. Put the safety switch in the 'F' position. Close the bolt smartly. The firing pin must remain cocked. To check, pull the trigger. The firing pin must fall. Repeat the test at least ten times. If the firing pin will not remain cocked when the bolt is closed smartly, return the firearm to the factory, or a REMINGTON RECOMMENDED GUNSMITH.

Point the firearm in a safe direction.

CLEANING FREQUENCY:

1. Before and after long term storage.
2. When the rifle has been subjected to adverse conditions such as shooting in the rain, snow, sleet, or salt water areas.
3. When the rifle is exposed to dirty conditions such as lying on the ground outdoors, being dropped in mud, etc.

NOTE: While the Model 700 Stainless Synthetic Rifle has been designed and manufactured to provide improved corrosion protection, only proper care will keep your firearm in good operating condition and maintain its appearance. After extensive use, the protective coating on plated parts may be worn sufficiently to reduce corrosion protection. Such worn parts should be replaced to assure integrity of the corrosion protection.

WARNING: After each use, follow the lubrication and maintenance direction in this instruction book. If the firearm is immersed, it must be thoroughly cleaned and lubricated as soon as possible. In case of salt water immersion, first flush all parts with fresh water, then dry, clean and lubricate the firearm. If the firearm does not function properly, have it corrected by a competent gunsmith before further use. Failure to obey this warning may lead to firearm malfunctions which could result in serious personal injuries.

INSTRUCTIONS FOR CLEANING THE BOLT ASSEMBLY

TO DISASSEMBLE THE BOLT ASSEMBLY:

1. Remove the bolt assembly from the firearm. See instructions on Page 5.
2. Put the notch on the firing pin head over a metal edge. Pull the bolt assembly away from the firing pin. Put a coin into the slot near the back edge of the firing pin head. See Picture 12.
3. Hold the bolt assembly and turn the bolt plug counter clockwise until the firing pin assembly can be removed from the bolt assembly.

CAUTION: Clean the firing pin assembly as a unit.

4. Clean all parts with gun cleaning solvent. Dry with a clean cloth.
5. Apply a thin coat of Rem™ Oil.

TO ASSEMBLE:

1. Put the firing pin assembly into the rear of the bolt assembly.
2. Tighten the bolt plug into the bolt assembly with your hand.
3. Pull the coin from the slot in the firing pin head.
4. Turn the bolt plug until the firing pin head goes into the small notch on the rear rim of the bolt. The bolt is now cocked. See Picture 13.

NOTE: The bolt must be cocked to be assembled into the rifle.

5. Assemble the bolt assembly into the rifle. See instructions on Page 5.

Picture 12

Picture 13

HOW TO ORDER PARTS FROM THE REMINGTON FACTORY

TO ORDER PARTS:

NOTE: Many Remington dealers carry a full line of parts.

1. Use the information on Pages 16 and 17 to find the correct part name and number.
2. Write the model and serial number of your firearm, and the part name and number on the parts order.
3. Send or fax parts order to:
   Arms Service Division
   Remington Arms Company, Inc.
   Ilion, New York 13357-1888

   Parts Department: 315-895-7493
   Parts Department Fax: 315-895-3659
4. When calling an order in, please have your Visa or Mastercard ready. If you wish to pre-pay by check or money order, an exact quote will be given to you over the phone.
5. Sorry, no C.O.D.'s.

WARNING: Use only Remington parts in Remington firearms.

TO ORDER FACTORY SERVICE:

1. Write a short description of the problem and include the model number, serial number and daytime telephone number.
2. Attach a copy to the firearm and another in an envelope on the outside of the box.

WARNING: Make sure gun and magazine are unloaded before shipping.

3. Send by either United Parcel Service or Parcel Post.
4. Get insurance for the firearm.
5. Record the serial number. It is required when calling factory to inquire if firearm has been received for repairs.
6. Send firearms for factory service to:
   Arms Service Division
   Remington Arms Company, Inc.
   Ilion, New York 13357-1888

   Service Department: 315-895-7791
   Service Department Fax: 315-895-3659

INSTRUCTION BOOKS AND GUNSMITH LIST:

To get an instruction book for any Remington firearm, a firearms safety booklet, and a list of recommended gunsmiths, write to Remington Arms Company, Inc., Arms Service Division, Ilion, New York 13357. Give the model, serial number, gauge or caliber.

MODEL 700
Bolt Action Center Fire Rifle

HOW TO ORDER PARTS AND SERVICE

MODEL 700 PARTS LIST

PARTS SUBJECT TO CHANGE WITHOUT NOTICE:
FOB ILION, NEW YORK

VIEW NO.	NAME OF PART
	NOTE: Basic 30-06 Caliber listed below. See Exploded View for proper identity of parts.
1	Barrel Assembly
2	Bolt Assembly
3	Bolt Plug
4	Bolt Stop (Restricted)
5	Bolt Stop Pin (Restricted)
6	Bolt Stop Spring (Restricted)
7	Butt Plate Frame (New Style Not Shown).
	Butt Plate Insert (New Style Not Shown)
8	Butt Plate Spacer BDL Grade
9	Butt Plate Screw
10	Center Guard Screw ADL Grade
11	Ejector
12	Ejector Pin
13	Ejector Spring
14	Extractor
16	Firing Pin Assembly
17	Firing Pin Cross Pin
18	Floor Plate Latch, BDL Grade
19	Floor Plate Latch Pin, BDL Grade
20	Floor Plate Latch Spring, BDL Grade
21	Floor Plate Pivot Pin, BDL Grade
22	Front Guard Screw (BDL)
23	Front Guard Screw Bushing, ADL Grade
24	Front Sight
	Front Sight (Low)
25	Front Sight Ramp BDL
26	Front Sight Ramp Screw
27	Front Sight Hood

VIEW NO.	NAME OF PART
29	Front Swivel Screw
	Grip Cap, BDL Grade (Not Shown)
	Grip Cap Spacer (Not Shown)
30	Magazine, ADL Grade
30a	Magazine Assembly, BDL
	(Detachable Magazine Not Shown)
	Magazine, BDL Grade (Not Shown)
31	Magazine Follower, ADL
	Magazine Follower, BDL
	Magazine Tab Screw, ADL Grade
32	Magazine Spring, ADL Grade
	Magazine Spring, BDL Grade
33	Main Spring
34	Rear Guard Screw
35	Rear Sight Aperture
	Rear Sight Assembly
	Rear Sight Base
37	Rear Sight Base Screw (2)
38	Rear Sight Slide
39	Elevation Screw
40	Rear Swivel
41	Receiver Plug Screw
42	Sear Pin (Restricted)
44	Stock Assembly, ADL Grade
	Stock Assembly, BDL Grade
46	Trigger Assembly (Restricted)
47	Trigger Guard, ADL Grade
48	Trigger Guard Assembly, BDL Grade
	Trigger Guard, (Detachable Magazine Not Shown)
49	Windage Screw

IMPORTANT

LIRE CE LIVRET AVANT TOUTE UTILISATION DE LA CARABINE

LIVRET D'INSTRUCTIONS

Carabine à culasse mobile à percussion centrale
Modèle 700

PR 0403

Carabine modèle 700 à percussion centrale

Félicitations sur votre choix d'une carabine Remington. Avec un bon entretien, elle vous servira pendant de longues années.

Pour obtenir les meilleurs résultats, nous préconisons les munitions de marque Remington. Ce sont elles qui servent, lors des essais en usine, à vérifier la conformité à nos normes exigeantes de fonctionnement et de performances

Illustration 1

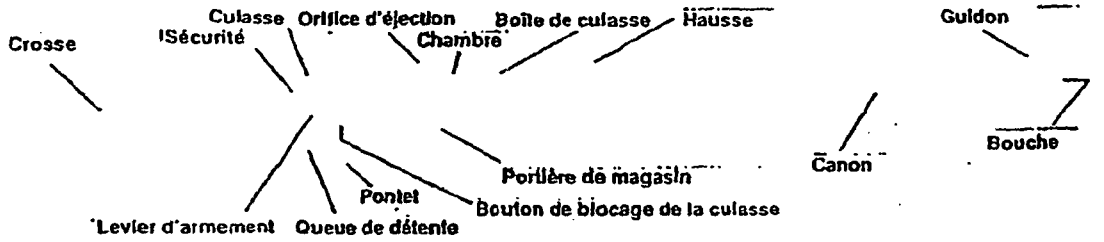

L'illustration ci-dessus représente les éléments principaux de la CARABINE MODELE 700 À PERCUSSION CENTRALE. Elle est destinée à faciliter la compréhension des instructions du présent manuel.

Illustration 2 - Munition

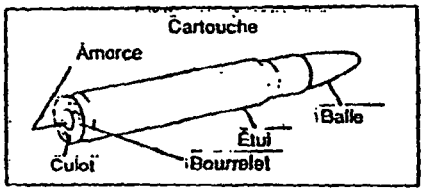

Cette illustration représente les différents éléments de la munition .

REGLES DE SÉCURITÉ

ATTENTION DANGER

VEUILLEZ LIRE ATTENTIVEMENT LES REGLES DE SÉCURITÉ CI-DESSOUS. Apprenez à manipuler votre arme en toute sécurité. La non-observation des règles de sécurité risque de causer des dommages corporels graves. Vous êtes le seul responsable de la prévention des accidents.

CONNAISSEZ VOTRE ARME A FOND. Pour sa bonne utilisation, respectez les instructions du livret de sécurité (inclus) et du présent manuel. Des exemplaires supplémentaires gratuits sont disponibles sur demande auprès de votre revendeur Remington.

TRAITEZ SYSTÉMATIQUEMENT UNE ARME COMME SI ELLE ÉTAIT CHARGÉE. Ne vous fiez pas à la sécurité. Utilisez-la conformément au présent manuel. Même avec la sécurité en place, une manipulation sans soins peut causer un tir. La sécurité peut ne pas être en place ; son mécanisme peut avoir été modifié, mis hors service ou être cassé, ou la sécurité peut avoir été dégagée par une manipulation peu soigneuse de l'arme.

RÉGLAGES INTERDITS. Ne jamais changer ou altérer une pièce d'une arme. N'utiliser que des pièces d'origine REMINGTON. Ne jamais apporter une modification au mécanisme de détente, ni à la gâchette, ni au cran d'armé ou aucune autre pièces.

VEILLEZ A VOTRE SÉCURITÉ. Lors des séances de tir, protégez systématiquement vos yeux (à l'aide lunettes de vue, de soleil ou de tir). Protégez également vos oreilles (casque antibruit) pendant les séances de tir. Les expositions répétées au coups de feu cause une réduction des fonctions auditives. Dans les cas rares de rupture d'un étui ou de mauvais fonctionnement de l'arme il y a risque de dommages à l'ouïe ou à la vision. Ne jamais utiliser une arme à feu si vos réactions sont diminuées par l'absorption d'alcool ou de médicaments.

PRENEZ SOIN DE VOTRE ARME A FEU. Veillez à maintenir la propreté du canon. Nettoyez le fusil et faites-le vérifier régulièrement pour veiller à son bon état mécanique. Une pièce usée, endommagée ou manquante présente un danger.

ATTENTION AU CANON

ATTENTION AU CANON. Une arme doit toujours être braquée dans une direction sûre.

REGLES DE SÉCURITÉ

NE JAMAIS EMPLOYER UNE MUNITION IMPROPRE. N'utilisez que des munitions correspondant exactement au calibre (chambrage) de votre arme. Le chargement manuel, effectué mal ou sans précautions, est dangereux. Un chargement manuel mal fait est susceptible de causer une rupture du canon ou de la culasse d'une arme à feu, avec des risques de blessures graves.

CHARGEZ VOTRE ARME DE FAÇON SURE. Ne chargez jamais une arme à feu si vous n'êtes pas à un endroit permettant de tirer sans danger. Gardez la sûreté en position « S » (Sûre) tant que vous n'êtes pas prêt à tirer.

SACHEZ SUR QUOI VOUS TIREZ. Avant d'appuyer sur la détente, assurez-vous que vous voyez clairement votre cible et la trajectoire de la balle ou de la charge de plombs derrière celle-ci. Ne tirez jamais sur de l'eau, des rochers ou une surface dure : les balles risquent de ricocher dessus et de causer des blessures.

CONNAISSEZ LA PORTÉE DE VOTRE ARME A FEU. N'oubliez pas qu'un plomb peut parcourir 500 mètres, et une balle peut parcourir près d'un kilomètre. Une balle de munition à amorçage latéral peut parcourir plus de 2500 m. Une balle de munition à amorçage central peut parcourir 8000 m.

EN CAS DE RATÉ, maintenez votre arme à feu dirigée dans une direction sans danger, puis déchargez-la avec précaution en vous tenant hors de l'axe de la culasse. Si le coup part mais que le recul semble faible, déchargez votre arme et vérifiez que son canon n'est pas obstrué.

DÉCHARGEZ SYSTÉMATIQUEMENT VOTRE ARME A FEU QUAND VOUS NE TIREZ PAS. Ne portez ni ne rangez jamais une arme à feu chargée dans un véhicule ou un bâtiment. Déchargez votre arme à feu avant de franchir un obstacle risquant de vous faire perdre ne serai-ce que de façon minime le contrôle de votre arme (arbre tombé, clôture, zone glissante, etc).

RANGEZ VOTRE ARME A FEU EN LIEU SUR. Gardez les armes et munitions hors d'atteinte des enfants. Placez les armes à feu déchargées et les munitions sous clef à des endroits différents.

ATTENTION DANGER : Le tir d'une arme à feu dans une enceinte mal aérée, le nettoyage d'une arme à feu ou la manipulation de munitions est susceptible de causer une exposition au plomb. Ce métal est à l'origine de défauts congénitaux, est nuisible à l'appareil reproducteur et cause des maladies graves. Veillez à une bonne aération en permanence. Se laver les mains soigneusement après manipulation.

Pièces importantes de l'arme à feu

Sécurité

La sécurité assure la protection contre les tirs accidentels ou inintentionnels sous utilisation normal, sous réserve qu'elle soit bien armée et en bon état.

Pour armer la sécurité, la mettre sur la position « S » (Sûre). Voir la figure 3.

Toujours mettre la sécurité sur la position « S » avant de manipuler, de charger ou de décharger l'arme.

Quand vous êtes prêts à tirer, mettez la sécurité sur la position « F » (Tir) pour la désarmer. Voir la figure 4.

Ne pas toucher à la queue de détente lors d'une manoeuvre de la sécurité.

Ne jamais actionner la queue de détente quand sécurité est en position « S ».

ATTENTION DANGER : L'arme à feu tire quand on tire la queue de détente avec la sécurité en position « F ».

Même si la sécurité est sur la position «S» une manipulation brutale de l'arme peut en déclencher le tir. Voir les Règles de sécurité page 2.

Position « S » (Sûre)

Figure 3

Position « F » (Tir)

Figure 4

CULASSE

La culasse sert à verrouiller la cartouche dans la chambre.

MONTAGE DE LA CULASSE :

1. Diriger l'arme à feu dans une direction sans danger.
2. Mettez la sécurité sur la position « S ».
3. Aligner les pattes de la culasse avec la boîte de culasse. Voir la figure 5.
4. Enfoncer la culasse à fond dans la boîte de culasse.
5. Pour fermer la culasse, appuyer vers le bas sur son levier. 5.

DÉMONTAGE DE LA CULASSE :

1. Diriger l'arme à feu dans une direction sans danger.
2. Mettre la sécurité sur la position « S ».
3. Ne pas toucher la queue de détente pendant le déplacement de la sécurité.
4. Lever le levier de culasse.
5. Tirer le levier de culasse à fond vers l'arrière.
6. Appuyer sur le bouton de blocage de la culasse. Voir la figure 5.
7. Tout en appuyant sur le bouton de blocage, extraire la culasse de l'arme à feu.

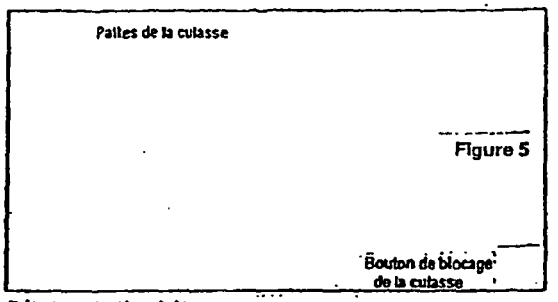

Figure 5

Détente et mise à feu :

Le fait d'appuyer sur la queue de détente déclenche le tir.

Le mécanisme de la queue de détente est réglé en usine.

Tout réglage éventuel doit obligatoirement être effectué en usine ou par un ARMURIER AGRÉÉ PAR REMINGTON.

ATTENTION DANGER : NE JAMAIS déposer le mécanisme de détente, ni ne modifier la queue de détente ou son mécanisme.

ATTENTION DANGER : NE JAMAIS toucher la queue de détente sauf au moment précis du tir.

CANON

L'intérieur du canon doit obligatoirement être propre et exempt d'obstructions.

I. POUR VÉRIFIER L'ÉTAT DE L'INTÉRIEUR DU CANON

1. Diriger l'arme à feu dans une direction sans danger.
2. Mettez la sécurité sur la position « S ».
3. Lever le levier d'armement.
4. Tirer le levier d'armement à fond en arrière.
5. Enlever toute munition se trouvant dans la chambre ou dans le chargeur. Voir la page 8.
6. Enlever la culasse. Voir la page 5.
7. Regarder dans le canon depuis la chambre et vers la bouche. Voir la page 1.

II. COMMENT EXTRAIRE UN OBJET SE TROUVANT A L'INTÉRIEUR DU CANON

1. Prendre une baguette de la taille appropriée.
2. Pousser la baguette à l'intérieur du canon à partir de la chambre jusqu'à ce qu'elle ressorte par la bouche.
3. Si un objet s'avère difficile à extraire du canon en le poussant à l'aide d'une baguette, retourner l'arme en usine ou à un ARMURIER AGRÉÉ PAR REMINGTON.

ATTENTION DANGER : NE JAMAIS essayer d'extraire un objet du canon en chargeant une cartouche dans l'arme et en faisant feu. Il y aurait danger d'explosion du canon ou de la cartouche, et risque de blessures graves.

III. POUR NETTOYER LE CANON, RESPECTER LES INSTRUCTIONS DE LA PAGE 10

Avant de charger l'arme à feu, assurez-vous que l'intérieur du canon est exempt d'impuretés et autres obstructions.

REMARQUE SPÉCIALE
INSTRUCTIONS DE CHARGEMENT DES CARTOUCHES 220 SWIFT

A la différence des autres cartouches chambrées dans la carabine Modèle 700, la .220 SWIFT est une cartouche à demi-bourrelet. De ce fait, pour assurer une bonne alimentation, veillez à ce que le bourrelet de la cartouche supérieure soit toujours en avant de celui de la cartouche inférieure.

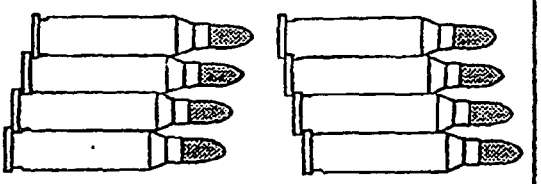

PR 0409

COMMENT CHARGER L'ARME À FEU

Il existe trois types de carabines Modèle 700 : L'une avec une PORTIERE DE MAGASIN, une autre sans PORTIERE DE MAGASIN et une autre munie d'un CHARGEUR AMOVIBLE.

I. POUR CHARGER UNE SEULE CARTOUCHE :

1. Diriger l'arme à feu dans une direction sans danger.
2. Mettez la sécurité sur la position « S ».
3. Lever le levier de culasse.
4. Tirer le levier de culasse à fond vers l'arrière.
5. Introduire une cartouche du bon calibre sur le plateau de chargeur ou dans la chambre. Voir la figure 6.
6. Repousser le levier d'armement vers l'avant, puis l'appuyer vers le bas pour verrouiller la cartouche dans la chambre.

L'ARME A FEU EST DÉSORMAIS CHARGÉE

7. Pour pouvoir tirer, mettre la sécurité sur la position « F ».

L'ARME A FEU EST DÉSORMAIS PRETE A TIRER

II. COMMENT CHARGER LA CHAMBRE ET LE MAGASIN :

1. Diriger l'arme à feu dans une direction sans danger.
2. Mettez la sécurité sur la position « S ».
3. Lever le levier de culasse.
4. Tirer le levier de culasse à fond vers l'arrière.
5. Introduire 4 cartouches du bon calibre (une à la fois) dans la magasin. Si l'arme à feu est un magnum, on ne peut introduire que 3 cartouches. Si l'arme à feu est de calibre 17, 222 ou 223 le magasin peut recevoir 5 cartouches. Maintenez les cartouches dirigées vers la chambre. Voir la figure 6.
6. Mettre une cartouche dans la chambre.
7. Avec vos doigts, appuyez sur les cartouches pour les enfoncer à fond dans la magasin. Repousser la culasse lentement vers l'avant, de façon qu'elle passe au-dessus des cartouches du magasin.
8. Appuyer le levier d'armement vers le bas.

LA CHAMBRE ET LE MAGASIN SONT COMPLETEMENT CHARGÉS

9. Pour pouvoir tirer, mettre la sécurité sur la position « F ».

L'ARME A FEU EST DÉSORMAIS PRETE A TIRER

ATTENTION DANGER : TOUJOURS vérifier que le calibre des cartouches est correct avant de charger l'arme.

Introduire les cartouches comme indiqué.

Figure 6

Autre méthode de chargement de la chambre et du magasin : (pour les carabines Modèle 700 équipées d'un chargeur amovible)

1. Diriger l'arme à feu dans une direction sans danger.
2. Mettez la sécurité sur la position « S ».
3. Lever le levier de culasse.
4. Tirer le levier de culasse à fond vers l'arrière.
5. Appuyer simultanément (vers l'intérieur) sur les deux loquets du chargeur et extraire ce dernier de l'arme. Voir la figure 7.
6. Introduire 4 cartouches du bon calibre (une à la fois) dans le chargeur, vers l'arrière de ce dernier. Si l'arme est un magnum, on ne peut introduire que 3 cartouches. Maintenez les cartouches dirigées vers la chambre. Voir la figure 7.
7. Introduire le chargeur dans l'ouverture du pontet et enfoncez-le jusqu'à ce que les deux loquets soient complètement encliquetés.

LE MAGASIN EST COMPLETEMENT CHARGÉ

8. Mettez une cartouche du bon calibre dans la chambre. Voir la figure 6.
9. Avec vos doigts, appuyez sur les cartouches pour les enfoncer à fond dans la magasin. Repousser la culasse lentement vers l'avant, de façon qu'elle passe au-dessus des cartouches du magasin.
10. Appuyer le levier d'armement vers le bas pour verrouiller la cartouche dans la chambre.

LA CHAMBRE ET LE MAGASIN SONT COMPLETEMENT CHARGÉS

11. Pour pouvoir tirer, mettre la sécurité sur la position « F ».

L'ARME A FEU EST PRETE A TIRER

ATTENTION DANGER : TOUJOURS vérifier que le calibre des cartouches est correct avant de charger l'arme.

Figure 7

Appuyer (vers l'intérieur) sur les deux loquets du chargeur

COMMENT DÉCHARGER L'ARME

Il existe trois types de carabines Modèle 700 : L'une avec une PORTIERE DE MAGASIN, une autre sans PORTIERE DE MAGASIN et une autre munie d'un CHARGEUR AMOVIBLE.

INSTRUCTIONS POUR LES MODELES MUNIS D'UNE PORTIERE DE MAGASIN :

1. Diriger l'arme à feu dans une direction sans danger.
2. Mettez la sécurité sur la position « S ».
3. Lever le levier de culasse.
4. Mettre une main au-dessus de la fenêtre d'éjection.
5. Tirer lentement le levier d'armement vers l'arrière à l'aide de l'autre main pour pouvoir extraire la cartouche de la chambre.
6. Saisissez la cartouche et extrayez-la de l'arme.
7. Mettez une main sous la portière de magasin.

8. Appuyez sur le verrou de portière pour ouvrir celle-ci. Voir la figure 8. Le ressort d'apport et le plateau de chargeur vont tomber du magasin.

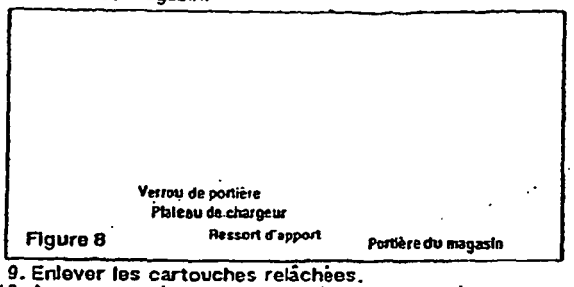

Figure 8

9. Enlever les cartouches relâchées.
10. Appuyer sur le transporteur de chargeur puis fermer la plaque d'appui.

ATTENTION DANGER : Vérifiez qu'il ne reste de cartouche ni dans la chambre ni dans le magasin.

INSTRUCTIONS POUR LES MODELES NON MUNIS D'UNE PORTIERE DE MAGASIN :

1. Exécuter les étapes 1 à 6 ci-dessus.
2. Maintenez la bouche dirigée dans une direction sans danger. Appuyez lentement sur le levier d'armement pour faire sortir une cartouche du magasin. ATTENTION : Si le levier est trop poussé, la cartouche risque de s'enfoncer dans la chambre. Voir le Nota ci-dessous.
3. Tirer à fond sur le levier d'armement et extraire la cartouche de la fenêtre d'éjection.
4. Répéter les étapes 2 et 3 jusqu'à ce que le magasin soit complètement vidé.

ATTENTION DANGER : Vérifiez qu'il ne reste de cartouche ni dans la chambre ni dans le magasin.

NOTA : Si la culasse est poussée à fond vers l'avant, l'arme peut tirer. Normalement, le fait d'actionner la culasse vers l'arrière fait sortir les cartouches de la chambre. Toutefois, si la cartouche reste dans la chambre, diriger l'arme dans une direction sans danger, actionner la culasse à fond vers l'avant et abaisser le levier pour la culasse. Ensuite, répéter les étapes 1 à 4 ci-dessus.

INSTRUCTIONS POUR LES MODELES MUNIS D'UN CHARGEUR AMOVIBLE :

1. Diriger l'arme à feu dans une direction sans danger.
2. Mettez la sécurité sur la position « S ».
3. Lever le levier de culasse.
4. Mettre une main au-dessus de la fenêtre d'éjection.
5. Tirer lentement le levier d'armement vers l'arrière à l'aide de l'autre main pour pouvoir extraire la cartouche de la chambre.
6. Appuyer simultanément (vers l'intérieur) sur les deux loquets du chargeur et extraire ce dernier de l'arme. Voir la figure 7.
7. Extraire les cartouches du chargeur.
8. emettre le chargeur en place.

ATTENTION DANGER : Vérifiez qu'il ne reste de cartouche ni dans la chambre ni dans le chargeur.

COMMENT RÉGLER LE DISPOSITIF DE VISÉE

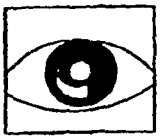

Tous les modèles munis d'une hausse et d'un guidon sont réglés en usine pour toucher une cible à 90 m.

RÉGLAGE DE LA HAUSSE :

Déplacer la hausse dans le sens désiré pour mettre la balle dans la cible.

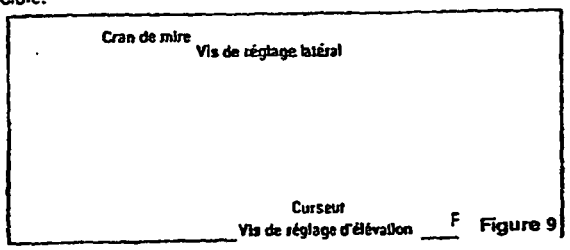

Figure 9

NOTA : On trouvera des éléments de balistique et de trajectoires dans le catalogue REMINGTON.

LUNETTE DE VISÉE

Le dessus de la boîte de culasse est muni de trous prévus pour la pose d'une lunette de visée.

POSITION SUR LA CIBLE	RÉGLAGES
Les balles touchent au-dessus du centre	a. Desserrer la vis de réglage de hausse b. Déplacer la hausse vers l'arrière c. Resserrer la vis de réglage de hausse
Les balles touchent au-dessous du centre	a. Desserrer la vis de réglage de hausse b. Déplacer la hausse vers l'avant c. Resserrer la vis de réglage de hausse
Les balles touchent à gauche du centre	a. Desserrer la vis de réglage latéral b. Déplacer le cran de mire vers la droite c. Resserrer la vis de réglage latéral
Les balles touchent à droite du centre	a. Desserrer la vis de réglage latéral b. Déplacer le cran de mire vers la gauche c. Resserrer la vis de réglage latéral

GRAISSAGE ET ENTRETIEN

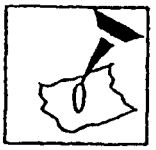

GRAISSAGE : Il importe de systématiquement éviter de trop graisser la carabine. Une fine pellicule d'huile Rem™ aide à éviter la rouille. Voir le NOTA ci-dessous.

Avant de ranger votre arme, il est important de la nettoyer et de la graisser avec soin. On appliquera ensuite de temps à autre une fine couche d'huile Rem™ sur les surfaces extérieures.

Avant de réutiliser votre arme, on devra obligatoirement éliminer toute huile se trouvant sur les parois de la chambre et de l'âme du canon, qui devront être parfaitement secs.

NOTA : Vous trouverez chez votre armurier l'huile spéciale Rem™ contenant du Téflon® spécial. S'il n'en dispose pas, demandez-lui de passer commande d'huile Rem™ auprès de son fournisseur.

COMMENT NETTOYER LE CANON

ATTENTION DANGER : Vérifiez qu'il ne reste de cartouche ni dans la chambre ni dans le chargeur.

1. Employez les outils d'un nécessaire de nettoyage de bonne qualité. Pour toutes recommandations, demandez conseil auprès de votre distributeur Remington.
2. Déposez la culasse. Voir les instructions page 5.
3. Choisissez un écouvillon de taille convenable et fixez-le à la baguette de nettoyage.
4. Trempez l'écouvillon dans la solvant de nettoyage.

NOTA : Pendant le nettoyage, le canon devra être en position horizontale, la fenêtre d'éjection vers le dessous. Le canon doit obligatoirement être nettoyé à partir de la chambre vers la bouche.

5. Enfoncez plusieurs fois la baguette dans le canon.
6. Détachez l'écouvillon de la baguette, fixez à celle-ci l'embout muni d'un coussinet et enfoncez celui-ci dans la canon.
7. Répéter l'opération plusieurs fois, en changeant le coussinet à chaque fois jusqu'à ce qu'il ressorte propre.
8. Faites passer dans toute la longueur du canon un coussinet imbibé d'huile Rem™.
9. Faites passer dans le canon un coussinet propre pour éliminer l'huile en excès.
10. A l'aide d'un chiffon doux propre, appliquez une fine couche d'huile Rem™ sur l'extérieur du canon.
11. Après le canon, nettoyez la boîte de culasse et le mécanisme de détente.

ATTENTION DANGER : une arme à feu doit être contrôlée régulièrement par un armurier agréé par Remington, afin de s'assurer de son bon état et du remplacement de toute pièce usée ou en mauvais état.

PR 0414

COMMENT NETTOYER LA BOITE DE CULASSE ET LE MÉCANISME DE DÉTENTE

1. Mettez la sécurité sur la position «S»
2. Éposez la culasse. Voir les instructions page 5.
3. Mettez la carabine la crosse en l'air.
4. Enlevez les vis du pontet. Voir la figure 10.

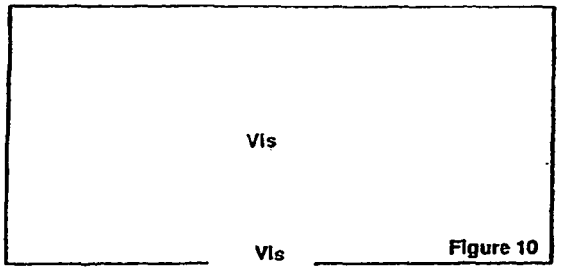

Figure 10

5. Extraire la crosse de l'ensemble culasse/détente.

UNIQUEMENT POUR LES MODELES NON MUNIS D'UNE PORTIERE DE MAGASIN :

Déposez le ressort d'apport et le plateau de chargeur de la culasse.

NOTA : On nettoiera l'ensemble culasse/détente assemblé à l'aide d'huile Rem™.

6. Spray the receiver and the four points of the trigger

6. Pulvérisez de l'huile Rem™ sur la culasse et les 4 points du mécanisme de détente. Voir la figure 11. Laissez l'huile agir pendant 15 minutes. Pulvérisez de nouveau pour nettoyer les pièces. Secouez l'ensemble pour éliminer l'huile en excès.

nents. Shake off excess lubricant.

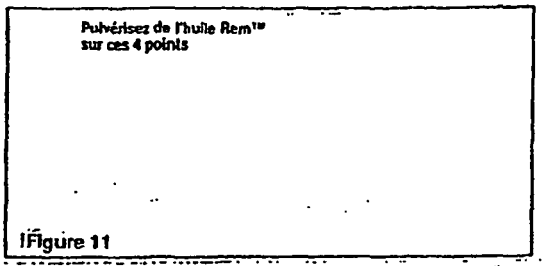

Figure 11

ATTENTION DANGER : L'emploi excessif d'une huile non préconisée est susceptible d'entrainer de graves incidents de fonctionnement, et en particulier des tirs accidentels.

REMONTAGE DES MODELES NON MUNIS D'UNE PORTIERE DE MAGASIN :

1. Remettez le plateau de chargeur et le ressort d'apport dans le magasin.
2. Remettez la crosse sur l'ensemble culasse/détente.
3. Remettez les vis du pontet et serrez-les.

ATTENTION DANGER : Avant de remonter la culasse, assurez-vous que le canon est exempt d'obstructions.

PR 0415

4. Remontez la culasse. Voir les instructions page 5.

COMMENT REMONTER LES MODELES MUNIS D'UNE PORTIERE DE MAGASIN :

Enfoncez le chargeur à fond dans la culasse.

MODELES MUNIS D'UNE PORTIERE DE MAGASIN OU D'UN CHARGEUR AMOVIBLE :

1. Montez le pontet sur la crosse.
2. Remettez la crosse sur l'ensemble culasse/détente.
3. Remettez les vis du pontet et serrez-les.
4. Fermez la portière de magasin ou remontez le chargeur.

ATTENTION DANGER : Avant de remonter la culasse, assurez-vous que le canon est exempt d'obstructions.

5. Remontez la culasse. Voir les instructions page 5.

ATTENTION DANGER : Après le nettoyage du mécanisme de détente, vérifiez l'absence de cartouches dans la chambre et dans le magasin. Mettez la sécurité sur « F ». Fermez la culasse énergiquement. Le percuteur doit obligatoirement rester armé. Pour le vérifier, appuyez sur la queue de détente. Le percuteur doit avancer. Répéter ce test un minimum de 10 fois. Si le percuteur ne reste pas en position armée après avoir fermé la culasse énergiquement, faites réviser l'arme par un ARMURIER AGRÉÉ PAR REMINGTON.

FRÉQUENCE DES NETTOYAGES

1. Avant et après tout rangement prolongé.
2. Chaque fois que la carabine aura été soumise à des conditions difficiles (tir sous la pluie, la neige, en bord de mer, etc.).
3. Chaque fois que la carabine aura été exposée à de la saleté (chute dans la boue, posée par terre à l'extérieur, etc.).

NOTA : Bien que l'huile Model 700 *Stainless Synthetic Rifle* soit étudié et produite pour assurer une meilleure résistance à la corrosion, seul un entretien soigneux assurera le bon état et le bon aspect de votre arme. Après un emploi intensif, il se peut toutefois que l'usure du revêtement protecteur de certaines pièces soit insuffisant pour résister à la corrosion. Il sera alors nécessaire de remplacer les pièces concernées pour rétablir l'intégrité de la résistance à la corrosion.

ATTENTION DANGER : Après chaque utilisation de l'arme, appliquez les instructions de graissage et d'entretien du présent livret. Si l'arme a été submergée, elle doit obligatoirement être nettoyée et graisser soigneusement le plus tôt possible. Si elle est tombée dans de l'eau de mer, en rincer soigneusement toutes les pièces à l'eau douce, avant de les sécher, puis de nettoyer et de graisser l'arme. Si l'arme ne fonctionne pas bien, faites la réparer par un armurier compétent avant tout emploi. A défaut, il y aurait risque de mauvais fonctionnement, susceptible d'entraîner des blessures.

COMMENT NETTOYER LA CULASSE

COMMENT DÉMONTER LA CULASSE :

1. Déposez la culasse de la carabine. Voir les instructions page 5.
2. Appuyez l'épaulement du percuteur sur un bord métallique, puis tirez sur la culasse pour la séparer du percuteur. Mettez une pièce de monnaie dans la fente située près du bord arrière du percuteur. Voir la figure 12.
3. Tout en maintenant la culasse, faites tourner le culot de culasse en sens inverse des aiguilles d'une montre jusqu'à pouvoir extraire le percuteur équipé.

ATTENTION : Le percuteur équipé devra obligatoirement être nettoyé comme une seule pièce, sans démontage.

4. Nettoyez toutes les pièces avec du solvant de nettoyage, puis séchez-les à l'aide d'un chiffon propre.
5. Appliquez une fine couche d'huile Rem™.

MONTAGE :

1. Remettez le percuteur équipé dans l'arrière de la culasse.
2. Serrer le culot de culasse à la main dans la culasse.
3. Levez la pièce de monnaie de la fente arrière du percuteur.
4. Faites tourner le culot de culasse jusqu'à ce que la tête du percuteur entre dans la petite ouverture de l'épaulement arrière de la culasse. La culasse est maintenant armée. Voir la figure 13.

NOTA : La culasse doit obligatoirement être armée pour pouvoir être remise en place.

5. Remettez la culasse dans la carabine. Voir les instructions page 5.

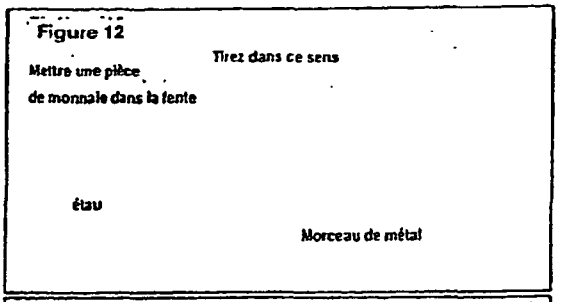

Figure 12

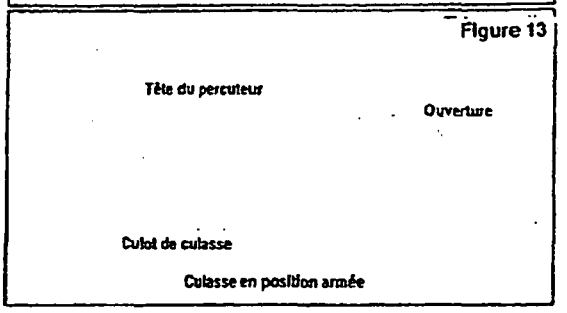

Figure 13

PR 0417

COMMENT PASSER COMMANDE DE PIÈCES DE RECHANGE ET FAIRE EFFECTUER DES RÉPARATIONS

COMMANDE DE PIÈCES DE RECHANGE ET FAIRE EFFECTUER DES RÉPARATIONS

Vous pouvez vous procurer les pièces de rechange figurant à la liste de pièces détachées auprès d'un revendeur agréé Remington dont une liste est incluse avec votre carabine.

Si la liste des revendeurs agréés manque, faites une demande du document intitulé «*Remington Authorized Gunsmiths*» à l'adresse suivante :

Customer Service Division
Remington Arms Company, Inc.
Ilion, New York 13357-1888
United States of America

ou par télécopie au (USA) 315-895-3659

Toute correspondance adressée à un revendeur agréé Remington doit obligatoirement comporter le modèle et le numéro de série de votre carabine, son calibre ainsi que le nom de la pièce désirée telle qu'elle apparait à la liste de pièces de rechange ci-dessous. Votre revendeur agréé Remington pourra vous faire part de leur prix, des frais de réparation (main d'oeuvre), ainsi que des frais d'expédition, d'assurance et taxes applicables.

Entretien :

Pour toute intervention d'entretien sur votre carabine Remington, adressez-vous à un revendeur agréé Remington (voir la liste). Pour votre sécurité et celle d'autrui, ne faites effectuer l'entretien de votre carabine que chez un revendeur agréé Remington.

Tout envoi de votre carabine devra comporter son modèle, numéro de série et calibre, ainsi qu'une description du problème. N'oubliez pas de mentionner vos nom et adresse, code postal et numéro de téléphone et de télécopie le cas échéant.

Joignez les renseignements ci-dessus dans une enveloppe à l'intérieur de l'emballage d'expédition qui devra être conforme aux instructions de votre revendeur agréé Remington.

Pour votre sécurité et celle d'autrui, veillez à bien décharger votre carabine et NE METTEZ JAMAIS de munitions dans un envoi.

Liste de pièces de rechanges de la carabine Modèle 700

Pièces soumises à modification sans préavis
FOB Ilion (État de New York, États-Unis).

Repère	Nom de la pièce	Repère	Nom de la pièce
	NOTA : La liste ci-dessous s'applique à la carabine Calibre 30-06 de base. Consulter l'éclaté pour la bonne dénomination des pièces.	29	Vis d'anneau grenadière avant
			Capuchon, qualité BDL (non représenté)
1	Canon équipé		Entretoise de capuchon (non représenté)
2	Culasse équipée	30	Magasin (qualité ADL)
3	Culot de culasse	30a	Magasin équipé (BDL)
4	Butée de culasse (non disponible en rechange)		(chargeur amovible non représenté)
5	Axe de butée de culasse (non disponible en rechange)		Magasin (qualité BDL) (non représenté)
6	Ressort de butée de culasse (non disponible en rechange)	31	Plateau de chargeur, ADL
7	Cadre de plaque de couche (nouveau style non représenté)		Plateau de chargeur, BDL
	Plaque de couche (nouveau style non représenté)		Vis de magasin (qualité ADL)
8	Entretoise de Plaque de couche (qualité BDL)	32	Ressort d'apport (qualité ADL)
9	Vis de plaque de couche		Ressort d'apport (qualité BDL)
10	Vis centrale de pontet (qualité ADL)	33	Ressort du percuteur
11	Éjecteur	34	Vis arrière du pontet
12	Axe d'éjecteur	35	Cran de mire
13	Ressort d'éjecteur		Hausse équipée
14	Extracteur		Embase de hausse
16	Percuteur équipé	37	Vis de fixation d'embase de hausse (2)
17	Goupille transversale de percuteur	38	Curseur
18	Verrou de portière de magasin (qualité BDL)	39	Vis de réglage de hausse
19	Axe de verrou de portière de magasin (qualité BDL)	40	Axe arrière
20	Ressort de verrou de portière de magasin (qualité BDL)	41	Vis de boîte de culasse
21	Axe de portière de magasin (qualité BDL)	42	Goupille de gâchette (non disponible en rechange)
22	Vis avant du pontet (BDL)	44	Crosse équipée (qualité ADL)
23	Bague de vis avant du pontet (qualité ADL)		Crosse équipée (qualité BDL)
24	Guidon	46	Mécanisme de détente (non disponible en rechange)
	Guidon (bas)	47	Pontet (qualité ADL)
25	Embase de guidon (BDL)	48	Pontet équipé (qualité BDL)
26	Vis d'embase de guidon		Pontet (chargeur amovible non représenté)
27	Couvre-guidon	49	Vis de réglage latéral

PR 0420

IMPORTANTE

LEA ESTE FOLLETO ANTES DE UTILIZAR EL ARMA DE FUEGO

FOLLETO DE INSTRUCCIONES
Rifle de cerrojo de percusión central
Modelo 700

PR 0421

RIFLE DE PERCUSION CENTRAL MODELO 700

¡Felicidades por su elección de un Remington!
Con el cuidado adecuado, este rifle le proporcionará muchos años de uso confiable y placentero.

Se recomienda utilizar municiones Remington a fin de obtener resultados óptimos - en las pruebas de fábrica del rifle se utiliza este tipo de munición a fin conformarse con las normas más exigentes de funcionamiento y desempeño.

Ilustración 1

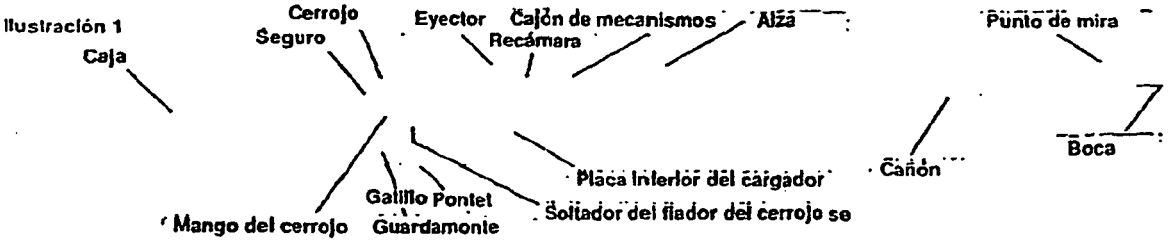

Esta ilustración muestra las principales piezas del RIFLE DE CERROJO REMINGTON MODELO 700.
La ilustración facilitará la comprensión de las instrucciones en este manual.

Ilustración 2
Munición

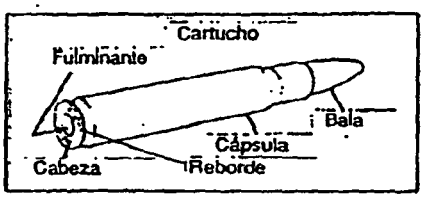

Esta ilustración muestra las partes de la munición.

REGLAS DE SEGURIDAD

ADVERTENCIA

LEA ESTAS REGLAS DE SEGURIDAD BASICA. Aprenda a manejar el arma de manera segura. Emplear el arma sin haber leído, comprendido ni obedecido estas reglas de seguridad conlleva riesgos de graves lesiones corporales. Sólo usted puede evitar los accidentes.

CONOZCA SU ARMA. Para utilizar el arma correcta y seguramente, lea y obedezca las instrucciones en el folleto adjunto de seguridad en el uso de armas de fuego y en este manual de instrucciones. Pueden obtenerse ejemplares gratis solicitándolos a Remington Arms Company, Inc.

TRATE TODA ARMA DE FUEGO COMO SI ESTUVIESE CARGADA. No dependa del seguro. Opérela de la manera indicada en este manual. Incluso con el seguro engranado, el arma puede dispararse si se maneja sin cuidado. Es posible que el seguro no esté bien engranado; que su mecanismo interno esté alterado, desactivado o averiado; o que el seguro se haya desengranado al manejar el arma sin cuidado.

NUNCA REALICE AJUSTES. Nunca cambie ni modifique ninguna pieza de un arma de fuego. Utilice sólo piezas REMINGTON. Nunca efectúe ajustes en el gatillo ni cambie la forma ni el tamaño del fiador, muesca del fiador u otras piezas.

PROTEJASE A SI MISMO. Al disparar proteja sus ojos con lentes, lentes de tiro o gafas de sol. Al disparar al blanco o tirotear, proteja sus oídos con tapones o tapaorejas. El oído puede sufrir daños permanentes con la exposición repetida a las detonaciones de los disparos. En el inusual caso que la caja se rompiera o fallara el arma, puede sufrirse daños al oído o la vista. Nunca dispare luego de beber bebidas alcohólicas o tomar medicamentos.

CUIDE SU ARMA DE FUEGO. Mantenga el cañón limpio y sin obstrucciones. Limpie y haga revisar el arma periódicamente para asegurar que sus mecanismos funcionan correctamente. Es peligroso utilizar el arma con piezas desgastadas, dañadas o faltantes.

VIGILE LA BOCA DEL CAÑON. Siempre mantenga el arma apuntada en una dirección que no represente peligro.

REGLAS DE SEGURIDAD

NUNCA UTILICE LA MUNICION INDEBIDA. Utilice únicamente municiones del calibre exacto o que correspondan a las marcas de calibre o diámetro del arma. Es peligroso cargar manualmente los cartuchos de manera descuidada o incorrecta. Cartuchos mal cargados pueden hacer explotar el cañón o la recámara de cualquier arma de fuego de mano, resultando en graves lesiones corporales.

CARGUE EL ARMA SIN PELIGRO. Nunca cargue un arma de fuego hasta encuentrarse en un lugar donde pueda disparar sin peligro y esté listo para disparar.

CONOZCA SU BLANCO. Antes de tirar del gatillo asegúrese que pueda ver claramente tanto el blanco como la trayectoria de la bala, plomo o perdigón más allá del blanco. Nunca dispare contra agua, piedras ni superficies dura. Las balas podrían rebotar y causar heridas.

CONOZCA EL ALCANCE DE SU ARMA. Los perdigones de escopeta pueden viajar hasta 460 metros y los plomos pueden tener un alcance de 800 metros. Las balas de percusión anular llegan a más de 2 1/2 kilómetros. Las balas de percusión central alcanzan hasta 8 kilómetros.

SI EL ARMA NO DISPARA, apúntela en una dirección sin peligro y descárguela con cuidado para no exponerse a la recámara. Si el arma dispara pero la detonación o el retroceso pareciera débil, descárguela y compruebe que el cañón no se encuentre obstruido.

DESCARGUE EL ARMA CUANDO NO ESTÉ DISPARANDO. Nunca lleve ni guarde un arma cargada en un edificio o vehículo. Descargue el arma antes de cruzar, subir o bajar cualquier obstáculo que pueda impedir el control total del arma, como árboles caídos, cercas, troncos de árboles o zonas resbalosas.

GUARDE EL ARMA EN UN LUGAR SEGURO. Mantenga las armas de fuego y municiones fuera del alcance de los niños. Guarde las armas descargadas y las municiones bajo llave y en lugares separados.

ADVERTENCIA. Tanto la descarga de armas de fuego como su limpieza y el manejo de municiones en lugares mal ventilados, implica un riesgo de exposición al plomo, el cual es una substancia que causa defectos de nacimiento, daños reproductivos y otras lesiones corporales graves. Mantenga siempre una buena ventilación. Lávese bien las manos luego de estas actividades.

PIEZAS IMPORTANTES DEL ARMA

EL SEGURO

En condiciones normales de empleo y cuando se encuentra correctamente engranado y en buen estado de funcionamiento, el seguro protege contra la descarga accidental o involuntaria del arma.

Para engranar el seguro, colóquelo en la posición «S». Ver la Figura 3.

Durante el manejo, carga y descarga del arma, mantenga siempre el seguro en la posición «S».

Cuando esté listo para disparar, coloque el seguro en la posición «F» para desengranarlo. Vea la Figura 4.

No toque el gatillo mientras mueve el seguro.

Nunca tire del gatillo cuando el seguro se encuentra en la posición «S».

ADVERTENCIA: El arma disparará si se tira del gatillo mientras el seguro está en la posición «F».

Incluso con el seguro en la posición «S», el arma puede dispararse si se maneja sin cuidado. Por favor lea las Reglas de Seguridad en la página 2.

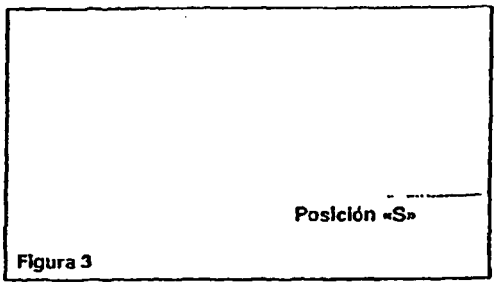

Figura 3

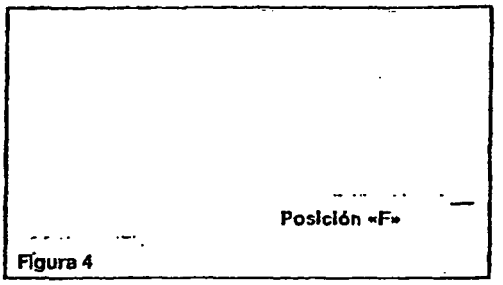

Figura 4

EL CERROJO

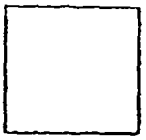

El cerrojo fija el cartucho en la recámara.

INSTALACION DEL CERROJO

1. Apunte el arma en una dirección sin peligro.
2. Coloque el seguro en la posición «S».
3. Alinee los tetones del cerrojo con el cajón de mecanismos. Vea la Figura 5.
4. Deslice el cerrojo dentro del cajón de mecanismos empujando hasta el fondo.
5. Para cerrar el cerrojo empuje el mango del cerrojo hacia abajo.

PARA DESARMAR EL CERROJO:

1. Apunte el arma en una dirección sin peligro
2. Ponga el seguro en la posición «S».
3. Mantenga su dedo alejado del gatillo mientras mueve el seguro.
4. Levante el mango del cerrojo
5. Tire del mango del cerrojo totalmente hacia atrás. Vea la Figura 5.
6. Oprima el soltador del fiador del cerrojo. Vea la Figura 5.
7. Mientras empuja el soltador del fiador del cerrojo, retire el cerrojo del arma.

Figura 5

EL GATILLO:

El arma se dispara al apretar el gatillo.

El gatillo viene regulado de fábrica.

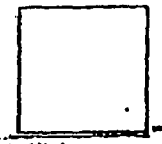

Cualquier ajuste del gatillo debe efectuarse en la fábrica o con un ARMERO RECOMENDADO POR REMINGTON.

ADVERTENCIA: NUNCA desarme el mecanismo del gatillo ni haga ajustes al gatillo ni al mecanismo del gatillo.

ADVERTENCIA: NUNCA coloque su dedo en el gatillo si no tiene intención de disparar el arma.

EL CAÑON

El interior del cañón debe estar siempre limpio y libre de obstrucciones.

I. INSPECCION DEL INTERIOR DEL CAÑON

1. Apunte el arma en una dirección sin peligro.
2. Coloque el seguro en la posición «S».
3. Levante el mango del cerrojo.
4. Corra el cerrojo completamente hacia atrás.
5. Retire la munición de la recámara y el cargador. Vea la página 8.
6. Retire el cerrojo. Vea la página 5.
7. Mire por el interior del cañón desde la recámara hasta la boca. Vea la Figura 1.

II. EXTRACCION DE OBJETOS DEL INTERIOR DEL CAÑON:

1. Emplee la baqueta del tamaño correcto.
2. Introduzca la baqueta desde el extremo de la recámara pasándola por todo el cañón hasta que salga por la boca.
3. Si no se puede sacar fácilmente un objeto del cañón con la baqueta, envíe el arma a la fábrica o donde un ARMERO RECOMENDADO POR REMINGTON.

ADVERTENCIA: NUNCA trate de sacar un objeto del cañón cargando otro cartucho y disparando. Esto puede causar graves lesiones corporales al explotar el cañón o romperse el casquillo de un cartucho.

III. PARA LIMPIAR EL CAÑON SIGA LAS INSTRUCCIONES EN LA PAGINA 10.

Antes de cargar el arma compruebe que el interior del cañón se encuentre libre de suciedad u otras obstrucciones.

AVISO ESPECIAL
INSTRUCCIONES DE CARGA DEL CARTUCHO SWIFT .220 EN EL MODELO 700

A diferencia de otro tipo de cartuchos aceptados en la recámara del Modelo 700, el cartucho SWIFT .220 es un cartucho semirebordeado. En consecuencia, para asegurar una alimentación correcta, compruebe que el reborde del cartucho superior se encuentre por delante del reborde del cartucho más abajo.

CORRECTO INCORRECTO

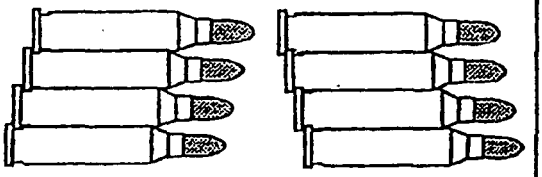

PR 0427

CARGA DEL ARMA

Existen tres tipos de rifles Modelo 700: uno con PLACA INFERIOR de cargador, otro sin PLACA INFERIOR y otro con CAJA DE CARGADOR DESMONTABLE.

I. CARGA DE UN SOLO CARTUCHO:

1. Apunte el arma en una dirección sin peligro.
2. Coloque el seguro en la posición «S».
3. Levante el mango del cerrojo.
4. Tire completamente hacia atrás el mango del cerrojo.
5. Coloque un cartucho del calibre correctó en el seguidor del cargador o en la recámara. Vea la Figura 6.
6. Corra el mango del cerrojo hacia adelante y empújelo luego hacia abajo para fijar el cartucho en la recámara.

EL ARMA SE ENCUENTRA AHORA CARGADA.

7. Para disparar el arma coloque el seguro en la posición «F».

EL ARMA ESTA LISTA PARA SER DISPARADA.

II. CARGA DE LA RECAMARA Y DEL CARGADOR:

1. Apunte el arma en una dirección sin peligro.
2. Coloque el seguro en la posición «S».
3. Levante el mango del cerrojo.
4. Tire completamente hacia atrás el mango del cerrojo.
5. Introduzca en el cargador cuatro cartuchos del calibre correcto, uno a la vez. Si el cargador es magnum, sólo podrá cargar tres cartuchos. Si el arma es de calibre 17, 222 ó 223, el cargador tiene capacidad para cinco cartuchos. Vea la Figura 6.
6. Coloque un cartucho en la recámara.
7. Emplee los dedos para empujar los cartuchos en el cargador completamente hacia abajo. Empuje lentamente hacia adelante el mecanismo del cerrojo de manera que el cerrojo se deslice por encima de los cartuchos en el cargador.
8. Empuje hacia abajo el mango del cerrojo.

LA RECAMARA Y EL CARGADOR ESTAN AHORA COMPLETAMENTE CARGADOS.

9. Para disparar el arma coloque el seguro en la posición «F».

EL ARMA ESTA LISTA PARA SER DISPARADA.

ADVERTENCIA: Antes de cargar el arma verifique siempre que el cartucho sea del calibre correcto.

CARGUE EL CARTUCHO DE LA MANERA ILUSTRADA

Figura 6

METODO ALTERNATIVO PARA CARGAR LA RECAMARA Y EL CARGADOR: (PARA EL MODELO 700 CON CAJA DE CARGADOR DESMONTABLE)

1. Apunte el arma en una dirección sin peligro.
2. Coloque el seguro en la posición «S».
3. Levante el mango del cerrojo.
4. Tire completamente hacia atrás el mango del cerrojo.
5. Oprima hacia dentro los dos sujetadores del cargador y retire del arma la caja del cargador. Vea la Figura 7.
6. Coloque cuatro cartuchos del calibre correcto, uno después del otro, en la caja del cargador, empujando los cartuchos hacia la parte posterior del cargador. Si el arma es magnum, sólo podrá cargar tres cartuchos. Mantenga las balas alineadas hacia la recámara, Vea la Figura 7.
7. Coloque la caja del cargador en la abertura del guardamonte y empújela hasta que los dos sujetadores se enganchen en la posición totalmente fija.

EL CARGADOR ESTA AHORA COMPLETAMENTE CARGADO.

8. Coloque un cartucho del calibre correcto en la recámara. Vea la Figura 6.
9. Emplee los dedos para empujar los cartuchos completamente hacia abajo en la caja del cargador. Deslice lentamente hacia adelante el mecanismo del cerrojo de manera que el cerrojo se deslice por encima de los cartuchos en la caja del cargador.
10. Empuje hacia abajo el mango del cerrojo para fijar el cartucho en la recámara.

LA RECAMARA Y EL CARGADOR ESTAN AHORA COMPLETAMENTE CARGADOS.

11. Para disparar el arma coloque el seguro en la posición «F».

EL ARMA ESTA LISTA PARA DISPARAR.

ADVERTENCIA: Antes de cargar el arma verifique siempre que el cartucho sea del calibre correcto.

Figura 7

OPRIMA HACIA ADENTRO LOS DOS SUJETADORES DEL CARGADOR

DESCARGA DEL ARMA

Existen tres tipos de rifles Modelo 700: uno con PLACA INFERIOR de cargador, otro sin PLACA INFERIOR y otro con CAJA DE CARGADOR DESMONTABLE.

INSTRUCCIONES PARA LOS MODELOS CON UNA PLACA INFERIOR:

1. Apunte la boca del arma en dirección sin peligro.
2. Coloque el seguro en la posición «S».
3. Levante el mango del cerrojo.
4. Coloque una mano sobre la parte superior de la salida del extractor.
5. Con la otra mano, corra lentamente el mango del cerrojo hacia atrás para sacar el cartucho de la recámara.
6. Sostenga el cartucho y retírelo del arma.
7. Coloque su mano bajo la placa inferior.

8. Empuje el sujetador de la placa inferior a fin de liberarla. Vea la Figura 8. El resorte y seguidor del cargador se soltarán del cargador.

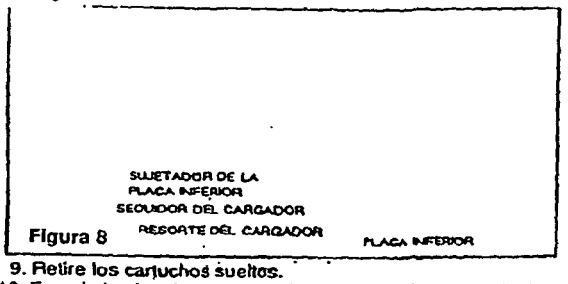

Figura 8

9. Retire los cartuchos sueltos.
10. Empuje hacia adentro el seguidor del cargador y cierre la placa inferior.

ADVERTENCIA: Inspeccione la recámara y el cargador para asegurarse que no queden cartuchos en el arma.

INSTRUCCIONES PARA LOS MODELOS SIN UNA PLACA INFERIOR:

1. Repita los pasos 1 a 6 anteriores.
2. Mantenga la boca del cañón apuntada en una dirección sin peligro. Empuje lentamente hacia adelante el mango del cerrojo hasta que un cartucho se suelte del cargador.

PRECAUCION: El cartucho puede deslizarse dentro de la recámara si se empuja el cerrojo demasiado hacia adelante. Vea la observación más abajo.

3. Tire completamente hacia atrás el mango del cerrojo y retire el cartucho de la salida de eyección.

4. Repita los pasos 2 y 3 hasta vaciar el cargador.

ADVERTENCIA: Inspeccione la recámara y el cargador para asegurarse que no queden cartuchos en el arma.

OBSERVACION: El arma puede dispararse si se empuja el cerrojo completamente hacia adelante y se introduce un cartucho en la recámara. Normalmente, los cartuchos saldrán de la recámara cuando se retira el cerrojo. Si el cartucho se queda en la recámara, apunte el rifle en una dirección sin peligro, corra el cerrojo completamente hacia adelante y empuje el mango hacia abajo para cerrar el cerrojo. Repita luego los pasos 1 a 4 anteriores.

INSTRUCCIONES PARA LOS MODELOS CON UNA CAJA DE CARGADOR DESMONTABLE:

1. Apunte el arma en una dirección sin peligro.
2. Coloque el seguro en la posición «S».
3. Levante el mango del cerrojo.
4. Coloque una mano sobre la parte superior de la salida del extractor.
5. Con la otra mano, corra lentamente el mango del cerrojo hacia atrás para sacar el cartucho de la recámara.
6. Oprima hacia adentro los dos sujetadores del cargador y retire del arma la caja del cargador. Vea la Figura 7.
7. Saque los cartuchos de la caja del cargador.
8. Instale la caja del cargador.

ADVERTENCIA: Inspeccione la recámara y la caja del cargador para asegurarse que no queden cartuchos en el arma.

AJUSTE DE MIRAS

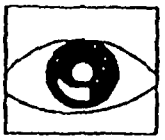

Todos los modelos con miras son ajustados en fábrica para un blanco a 92 metros.

AJUSTE DEL ALZA:

Mueva el alza en la misma dirección que necesita mover la bala en el blanco.

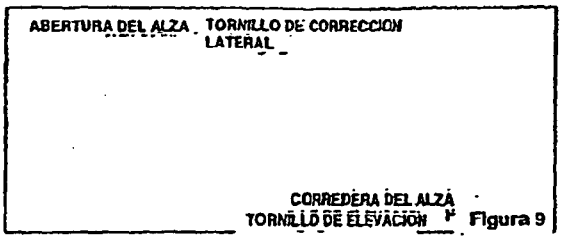

Figura 9

OBSERVACION: Para obtener mayor información sobre balística y trayectoria, vea el catálogo de REMINGTON.

MIRAS TELESCOPICAS: La parte superior del cajón de mecanismos tiene orificios para instalar miras telescópicas.

POSICION EN EL BLANCO	AJUSTES
La bala golpea encima del centro.	a. Afloje el tornillo de elevación en el alza. b. Corra el alza hacia abajo(hacia atrás) en la rampa. c. Ajuste el tornillo de elevación.
La bala golpea debajo del centro.	a. Afloje el tornillo de elevación en el alza. b. Corra el alza hacia arriba(hacia adelante) en la rampa. c. Ajuste el tornillo de elevación.
La bala golpea a la izquierda	a. Afloje el tornillo de corrección lateral en el alza. b. Corra hacia la derecha la abertura del alza. c. Ajuste el tornillo de corrección lateral.
La bala golpea a la derecha.	a. Afloje el tornillo de corrección lateral en el alza. b. Corra hacia la izquierda la abertura del alza. c. Ajuste el tornillo de corrección lateral.

LUBRICACION Y MANTENIMIENTO

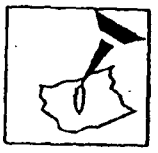

LUBRICACION:
Evite siempre el exceso de lubricación. Sólo se requiere una capa delgada de aceite Rem™ para prevenir la corrosión. Vea la Observación más abajo.

Antes de guardar el arma límpiela y acéitela completamente. Las superficies exteriores deben recibir una capa fina ocasional de aceite Rem™.

Antes de volver a utilizar el arma debe eliminarse el exceso de aceite. Limpie completamente la recámara y la superficie interior del cañón.

OBSERVACION: Tanto el aceite Rem™ de Remington como el lubricante húmedo Teflon® de DuPont pueden obtenerse donde su distribuidor local. Si las existencias del distribuidor se han agotado, pídale que ordene aceite Rem™ del distribuidor de Remington.

LIMPIEZA DEL CAÑON:

ADVERTENCIA: Inspeccione la recámara y el cargador para comprobar que no queden cartuchos en el arma.

1. Emplee el equipo provisto en un juego de limpieza de buena calidad. Puede obtener sugerencias donde un armero autorizado de Remington.
2. Desmonte el cerrojo. Lea las instrucciones en la página 5.
3. Seleccione la escobilla de limpieza del calibre correcto e instálela en la baqueta.
4. Introduzca la escobilla de limpieza en el solvente de limpieza del arma.

OBSERVACION: Durante la limpieza, el cañón debe descansar horizontalmente con la salida de eyección hacia abajo. Limpie siempre el cañón desde el extremo de la recámara hasta la boca.

5. Corra la escobilla por el cañón varias veces.
6. Retire la escobilla de la baqueta, coloque la punta con la estopa de limpieza y pásela por el interior del cañón.
7. Repita esto varias veces utilizando cada vez una nueva estopa de limpieza y hasta que salga limpia.
8. Pase por el cañón una estopa limpia saturada con aceite Rem™.
9. Pase por el cañón una estopa limpia y seca para eliminar el exceso de aceite.
10. Con una estopa limpia y suave, aplique una capa delgada de aceite Rem™ sobre la superficie exterior del cañón.
11. Después de limpiar el cañón, limpie el cajón de mecanismos y el mecanismo del gatillo.

ADVERTENCIA: Remington Arms Company, Inc. o un ARMERO RECOMENDADO POR REMINGTON debe revisar el arma periódicamente. De esta manera se garantiza una inspección correcta y el reemplazo de cualquier pieza desgastada o dañada.

LIMPIEZA DEL CAJON DE MECANISMOS Y MECANISMO DEL GATILLO

1. Coloque el seguro en la posición -S-.
2. Desmonte el cerrojo. Lea las instrucciones en la página 5
3. Coloque el rifle con el gatillo hacia arriba.
4. Retire los tornillos del guardamonte del gatillo. Vea la Figura 10.

TORNILLOS

TORNILLOS

Figura 10

5. Levante la caja separándola del cajón de mecanismos y mecanismo del gatillo.

SOLO PARA MODELOS SIN PLACA INFERIOR:

Retire del cajón de mecanismos el resorte y el seguidor del cargador.

OBSERVACION: Limpie con aceite Rem™ el cajón y el mecanismo del gatillo como una sola unidad.

6. Rocíe con aceite Rem™ el cajón de mecanismos y los cuatro puntos del mecanismo del gatillo. Vea la Figura 11. Deje reposar durante 15 minutos. Rocíe otra vez para lavar los componentes. Sacúdalos para eliminar el exceso de lubricante.

nents. Shake off excess lubricant.

ROCIE LOS 4 PUNTOS CON ACEITE Rem™

Figura 11

ADVERTENCIA: El empleo excesivo de un lubricante no recomendado puede causar graves problemas de funcionamiento que podrían conducir a la descarga accidental del arma.

ARMADO DE LOS MODELOS SIN PLACA INFERIOR:

1. Instale el seguidor del cargador y el resorte en el cargador.
2. Coloque la caja del rifle sobre el cajón de mecanismos y el mecanismo del gatillo.
3. Instale y ajuste los tornillos en el guardamonte.

ADVERTENCIA: Compruebe que el cañón se encuentre libre de obstrucciones antes de instalar el cerrojo.

4. Instale el cerrojo. Lea las instrucciones en la página 5.

ARMADO DE LOS MODELOS SOLO CON PLACA INFERIOR:

Introduzca completamente el cargador hasta el fondo del cajón de mecanismos.

MODELOS CON PLACA INFERIOR O CARGADOR DESMONTABLE:

1. Instale el guardamonte sobre la caja del rifle.
2. Coloque la caja sobre el cajón de mecanismos y el mecanismo del gatillo.
3. Instale y ajuste los tornillos del guardamonte.
4. Cierre la placa inferior o instale el cargador desmontable.

ADVERTENCIA: Compruebe que el cañón se encuentre libre de obstrucciones antes de instalar el cerrojo.

5. Instale el cerrojo. Lea las instrucciones en la página 5.

ADVERTENCIA: Después de limpiar el mecanismo del gatillo, revise tanto la recámara como el cargador comprobando que no queden cartuchos en el arma. Coloque el seguro en la posición «F». Cierre bien el cerrojo. El percutor debe quedar armado. Para comprobarlo, tire del gatillo. El percutor debe caer. Repita la prueba por lo menos diez veces. Si el percutor no queda armado luego de cerrar bien el cerrojo, envíe el arma a la fábrica o a un ARMERO RECOMENDADO POR REMINGTON.

FRECUENCIA DE LIMPIEZA:

1. Antes y después de estar guardada por mucho tiempo.
2. Cuando se ha sometido el rifle a condiciones adversas tales como disparar bajo la lluvia, nieve, granizo o áreas de agua salada.
3. Cuando se ha expuesto el rifle a la suciedad, como al dejarlo sobre la tierra, al caer en el lodo, etc.

OBSERVACION: Aunque el rifle *Modelo 700 Stainless Synthetic* ha sido diseñado y fabricado con el fin de prestar una mejor protección contra la corrosión, únicamente el cuidado adecuado mantendrá el arma en buenas condiciones de funcionamiento a la vez que se conserva su apariencia. Luego de un uso extensivo, la capa protectora en las piezas enchapadas puede desgastarse lo suficiente para disminuir la protección anticorrosiva. Tales piezas desgastadas deben reemplazarse a fin de asegurar la integridad de la protección anticorrosiva.

ADVERTENCIA: Siga las instrucciones de lubricación y mantenimiento en este manual de instrucción luego de utilizar el arma. Si se ha sumergido el arma en agua, debe limpiarse y lubricarse completamente tan pronto como sea posible. En caso de inmersión en agua salada, lave primero bien todas las piezas en agua dulce y luego seque, limpie y lubrique el arma. Si el rifle no funciona correctamente, hágalo reparar por un armero calificado antes de volverla a utilizar. El hacer caso omiso de esta advertencia puede causar desperfectos que podrían resultar en lesiones corporales graves.

INSTRUCCIONES DE LIMPIEZA DEL MECANISMO DEL CERROJO

PARA DESARMAR EL CERROJO

1. Desmonte el cerrojo del arma. Lea las instrucciones en la página 5.
2. Coloque la muesca en la cabeza del percutor sobre un borde de metal. Tire del mecanismo del cerrojo separándolo del percutor. Inserte una moneda en la ranura junto al extremo posterior de la cabeza del percutor. Vea la Figura 12.
3. Sostenga el mecanismo del cerrojo y gire el obturador del cerrojo hacia la izquierda hasta que se pueda retirar el percutor del mecanismo del cerrojo.

PRECAUCION: Limpie el mecanismo del percutor como una unidad.

4. Limpie todas las piezas con un solvente de limpieza de armas. Séquelas con una tela limpia.
5. Aplique una capa fina de aceite Rem™.

ARMADO:

1. Introduzca el mecanismo del percutor en la parte posterior del mecanismo del cerrojo.
2. Ajuste manualmente el obturador dentro del mecanismo del cerrojo.
3. Retire la moneda de la ranura en la cabeza del percutor.
4. Gire el obturador del cerrojo hasta que la cabeza del percutor entre en la muesca pequeña en el borde posterior del cerrojo. El cerrojo se encuentra ahora armado. Vea la Figura 13.

OBSERVACION: El cerrojo debe armarse para poder instalarlo en el rifle.

5. Instale en el rifle el mecanismo del cerrojo. Vea las instrucciones en la página 5.

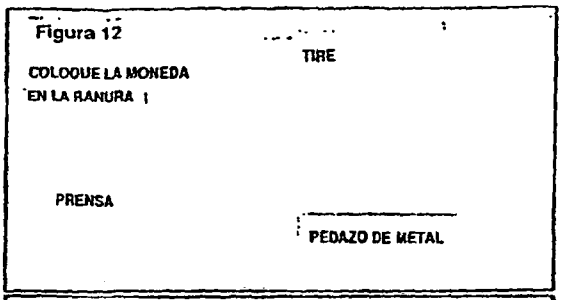

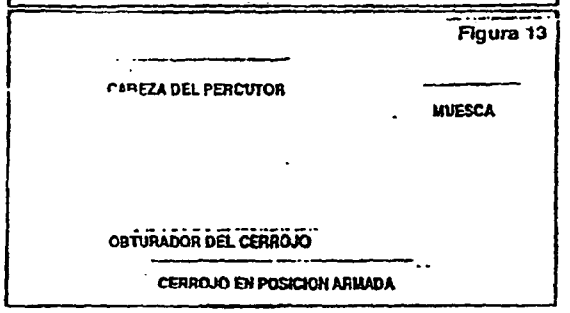

PR 0435

PEDIDO DE PIEZAS Y SERVICIO DE REMINGTON

PEDIDO DE PIEZAS Y SERVICIO DE REMINGTON

Las piezas de repuesto representadas en las ilustraciones pueden comprarse donde cualquier distribuidor Remington en su país. Junto con el arma se incluye una lista completa de los distribuidores Remington autorizados.

Si no encuentra la lista, pida el libreto:
«Remington Authorized Gunsmiths»
(Armeros autorizados por Remington)

A: Remington Arms Company, Inc.
Ilion, New York 13357-1888
United States of America

O envíe su pedido por fax al: (EE.UU.) 315-895-3659

La correspondencia con el distribuidor Remington autorizado debe incluir el número de modelo, número de serie, calibre o diámetro, nombre de la pieza exactamente como aparecen en las páginas siguientes. El distribuidor Remington autorizado tendrá mucho gusto de informarle el precio de las piezas, mano de obra, envío, seguro e impuestos.

Reparación de armas:

Para obtener reparaciones para su arma donde un armero autorizado por Remington, refiérase al folleto «Remington Authorized Gunsmiths» (Armeros autorizados por Remington). Por su seguridad, es importante que sólo un armero autorizado por Remington repare su arma.

Para enviar el arma, incluya el modelo, número de serie, calibre o diámetro. Incluya una nota en la cual se describa el problema y escriba su nombre, dirección, código postal, país, números de teléfono y fax con los códigos correspondientes a la ciudad y país.

Coloque esta información en un sobre dentro de la caja de envío. Siga cualquier otra instrucción de envío proporcionada por el armero autorizado por Remington.

Por seguridad, descargue siempre el arma. NUNCA incluya munición junto con el arma.

MODELO 700

Rifle de cerrojo de percusión central

PEDIDO DE PIEZAS Y SERVICIO

LISTA DE PIEZAS DEL MODELO 700

LAS PIEZAS ESTAN SUJETAS A CAMBIOS SIN PREVIO AVISO: FOB ILION, NUEVA YORK, EE.UU.

Vista No.	NOMBRE DE LA PIEZA	Vista No.	NOMBRE DE LA PIEZA
	OBSERVACION: A continuación se lista el calibre 30-06 básico. Vea la vista ampliada para la identificación correcta de las piezas.	29	Tornillo giratorio delantero
			Tapa de la empuñadura, Grado BDL (no ilustrada)
1	Cañón		Espaciador de la tapa de la empuñadura (no ilustrada)
2	Mecanismo del cerrojo	30	Cargador, Grado ADL
3	Obturador del cerrojo	30a	Mecanismo del cargador, BDL
4	Fiador del cerrojo (restringido)		(Cargador desmontable no ilustrado)
5	Pasador del fiador del cerrojo (restringido)		Cargador, Grado BDL (no ilustrado)
6	Resorte del fiador del cerrojo (restringido)	31	Seguidor del cargador, ADL
7	Marco de la placa de culata (no se ilustra el nuevo estilo)		Seguidor del cargador, BDL
	Inserto de la placa de culata (no se ilustra el nuevo estilo)		Tornillo de la lengüeta del cargador, Grado ADL
8	Espaciador de la placa de culata grado BDL	32	Resorte del cargador, Grado ADL
9	Tornillo de la placa de culata		Resorte del cargador, Grado BDL
10	Tornillo de guarda central grado ADL 1 Eyector	33	Muelle principal
11	Eyector	34	Tornillo de guarda posterior
12	Pasador del eyector	35	Abertura del alza
13	Resorte del eyector		Mecanismo del alza
14	Extractor		Base del alza
16	Mecanismo del percutor	37	Tornillo de la base del alza (2)
17	Pasador del percutor	38	Corredera del alza
18	Sujetador de la placa inferior, Grado BDL	39	Tornillo de elevación
19	Pasador del sujetador de la placa inferior, Grado BDL	40	Tornillo giratorio posterior
20	Resorte del sujetador de la placa inferior, Grado BDL	41	Tornillo sin cabeza del cajón de mecanismos
21	Pasador-pivote de la placa inferior, Grado BDL	42	Pasador del fiador (restringido)
22	Tornillo de guarda delantero (BDL)	44	Caja, Grado ADL
23	Casquillo del tornillo de guarda delantero, Grado ADL		Caja, Grado BDL
24	Punto de mira	46	Mecanismo del gatillo (restringido)
	Punto de mira (bajo)	47	Guardamonte, Grado ADL
25	Rampa del punto de mira, BDL	48	Ensamble del guardamonte, Grado BDL
26	Tornillo de rampa del punto de mira		Guardamonte, (Cargador desmontable no ilustrado)
27	Cubierta del punto de mira	49	Tornillo de corrección lateral

WICHTIG

Dieses Heft lesen, bevor Sie die Schußwaffe in Gebrauch nehmen

GEBRAUCHSANWEISUNGEN

Modell 700 Gewehr mit Bolzenverschluß, Mittenfeuerung

PR 0439

Modell 700 Gewehr mit Bolzenverschluß, Mittenfeuerung

Wir gratulieren! Ihr Remington-Gewehr wird Ihnen bei sachgemäßer Pflege lange Jahre zuverlässigen Dienst leisten.

Um die besten Ergebnisse zu erzielen, empfehlen wir den Gebrauch von Remington-Munition. Diese Munition wurde bei der Werksprüfung Ihrer Schußwaffe, bei der unsere strengen Funktions- und Leistungsnormen eingehalten wurden, benutzt.

Abbildung 1

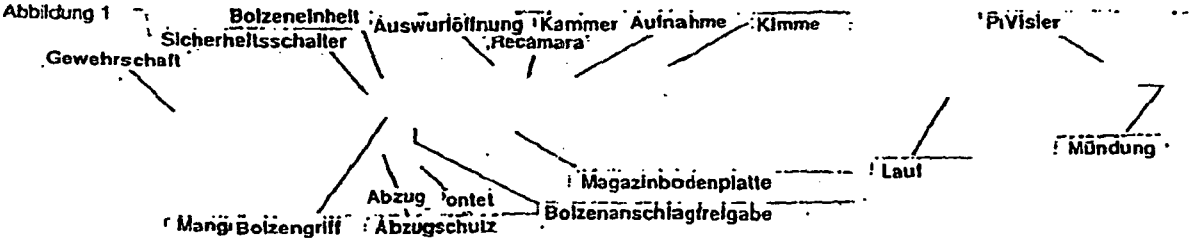

In der Abbildung werden die wichtigsten Teile des Remington- Gewehrs Modell 700 mit Bolzenverschluß dargestellt. Diese Abbildung verhilft Ihnen zu einem besseren Verständnis der Anweisungen.

Abbildung 2
Munition

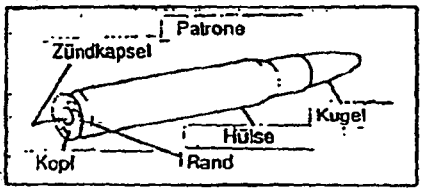

Diese Abbildung zeigt die Teile der Munition.

Sicherheitsregeln

ACHTUNG

Diese Sicherheitsregeln aufmerksam lesen. Lernen Sie den sicheren Umgang mit Ihrer Schußwaffe. Wenn Sie es versäumen, diese Sicherheitsregeln zu lesen, zu verstehen und zu befolgen, kann daraus schwere Verletzung entstehen. Nur Sie selbst können Unfälle verhindern.

Machen Sie sich mit der Schußwaffe vertraut. Um sie richtig und sicher zu benutzen, sind die Anweisungen in dem beiliegenden Sicherheitshandbuch für Schußwaffen und in diesen Gebrauchsanweisungen aufmerksam zu lesen und zu befolgen. Zusätzliche Exemplare sind kostenlos auf Anfrage von Remington Arms Company, Inc. erhältlich.

Jede Schußwaffe ist so zu handhaben, als ob sie geladen wäre. Verlassen Sie sich nicht auf den Sicherheitsschalter. Dieser ist den Anweisungen in diesem Heft gemäß zu gebrauchen. Auch wenn der Sicherheitsschalter betätigt ist, kann unsachgemäße Handhabung dazu führen, daß die Schußwaffe feuert. Möglicherweise ist der Sicherheitsschalter nicht wirklich eingerastet, vielleicht ist der interne Mechanismus beschädigt, außer Betrieb gesetzt oder abgeändert, oder vielleicht wurde der Sicherheitsschalter durch unsachgemäße Handhabung inaktiviert.

Niemals Einstellungen vornehmen. Keine Abänderungen oder Modifikationen irgendwelcher Teile der Schußwaffe vornehmen. Nur Ersatzteile von REMINGTON verwenden. Niemals eine Einstellung am Abzug vornehmen, oder die Größe oder Form der Verschlußstange, der Verschlußstangenkerbe oder anderer Teile ändern.

Sichern Sie sich selbst ab. Tragen Sie beim Schießen Augenschutz, wie z.B. Brille, Schutzbrille oder Sonnenbrille. Tragen Sie beim Scheibenschießen bzw. Übungsschießen Gehörschutz wie z.B. Ohrenpropfen oder Ohrenkappen. Wiederholte Exposition an Schußlärm kann permanenten Gehörverlust verursachen. Fehlfunktion der Schußwaffe oder Versagen der Hülse, auch wenn das seltene Ereignisse sind, kann zu Gehörschaden oder Augenverletzung führen. Niemals schießen, wenn Ihre Fähigkeit dazu durch Alkohol oder Arzneimittel beeinträchtigt ist.

Pflegen Sie Ihre Schußwaffe. Der Lauf ist immer sauber und von Blockierungen frei zu halten. Die Schußwaffe ist regelmäßig zu putzen und auf mechanische Funktion überprüfen zu lassen. Abgenutzte, beschädigte oder fehlende Teile können gefährlich sein.

Achten Sie auf die Laufmündung. Die Schußwaffe ist immer in eine Richtung zu richten, in der sie niemanden gefährdet.

Sicherheitsregeln

Niemals die falsche Munition gebrauchen. Nur die Munition gebrauchen, die genau den Kalibermarkierungen Ihrer Schußwaffe entspricht. Unaufmerksames oder falsches Laden per Hand ist gefährlich. Bei falschem Laden per Hand besteht die Gefahr, daß der Lauf oder der Verschluß einer handgehaltenen Schußwaffe bersten könnte, was zu schwerer Verletzung führen kann.

Laden Sie die Schußwaffe auf sichere Weise. Die Schußwaffe niemals laden, bis Sie sich an einer Stelle befinden, wo das Schießen keine Gefahr darstellt, und bis Sie zum Schießen bereit sind.

Achten Sie genau auf das Ziel. Bevor Sie den Abzug drücken, vergewissern Sie sich, daß Sie das Ziel und den Weg der Kugel oder der Schrotkugeln hinter dem Ziel klar vor Augen haben. Niemals auf Wasser, Steine oder eine harte Oberfläche schießen. Die Kugeln können von solchen Oberflächen abprallen und Verletzungen verursachen.

Behalten Sie die Reichweite Ihrer Schußwaffe im Sinn. Nicht zu vergessen: Flintenschrotkorn kann bis zu 500 Meter erreichen, Flintenschrotkugeln mehr als 800 Meter. Kugeln mit Randfeuerung erreichen mehr als 2,5 km und Kugeln mit Mittenfeuerung bis zu 8 km.

Falls die Schußwaffe nicht feuert, ist sie so zu halten, daß sie in eine sichere Richtung gerichtet ist, dann vorsichtig zu entladen, wobei Berührung des Verschlusses zu vermeiden ist. Falls die Schußwaffe feuert aber der Knall oder Rückstoß schwach erscheint, entladen und dann sicherstellen, daß der Lauf nicht blockiert ist.

Die Schußwaffe immer entladen, wenn Sie nicht schießen. Eine geladene Schußwaffe niemals tragen oder in einem Gebäude oder Fahrzeug aufbewahren. Die Schußwaffe immer entladen, bevor Sie irgendein Hindernis, wie z.B. einen Baumstamm, Zaun, Baumstand oder unsicheren Boden überqueren oder hoch- bzw. herunterklettern, wobei Sie verhindert sind, die Schußwaffe vollständig unter Kontrolle zu behalten.

Die Schußwaffe sicher aufbewahren. Schußwaffen und Munition für Kinder unzugänglich aufbewahren. Ungeladene Schußwaffen und Munition nicht an derselben Stelle sondern getrennt aufbewahren.

ACHTUNG: Das Feuern von Schußwaffen in schlecht belüfteten Bereichen, das Putzen von Schußwaffen und die Handhabung von Munition kann zu Exposition an Blei führen. Diese Substanz ist dafür bekannt, daß sie Geburtsfehler, Beschädigung der Fortpflanzungsorgane und weiteren schweren Körperschaden verursachen kann. Es ist immer ausreichende Belüftung vorzusehen. Nach der Exposition gründlich die Hände waschen.

PR 0442

Wichtige Komponenten der Schußwaffe

Der Sicherheitsschalter

Der Sicherheitsschalter bietet Schutz gegen versehentliches oder unbeabsichtigtes Abfeuern bei normalem Gebrauch, wenn er richtig eingerastet ist und gut funktioniert.

Um den Sicherheitsschalter zu betätigen, ist er in die "S"- Stellung zu bringen. Siehe Abbildung 3.

Der Sicherheitsschalter ist immer in die "S"-Stellung zu bringen, bevor die Schußwaffe gehandhabt, geladen oder entladen wird.

Wenn Sie bereit sind, die Schußwaffe zu feuern, ist der Sicherheitsschalter in die "F"-Stellung zu bringen, um ihn zu inaktivieren. Siehe Abbildung 4.

Den Abzug nicht anrühren, während der Sicherheitsschalter bewegt wird.

Den Abzug niemals drücken, während der Sicherheitsschalter sich in der "S"-Stellung befindet.

ACHTUNG: Die Schußwaffe feuert, wenn der Abzug gedrückt wird und der Sicherheitsschalter sich in der "F"-Stellung befindet.

Auch wenn der Sicherheitsschalter sich in der "S"-Stellung befindet, kann unsachgemäße Handhabung dazu führen, daß die Schußwaffe feuert. Siehe Sicherheitsregeln auf Seite 2

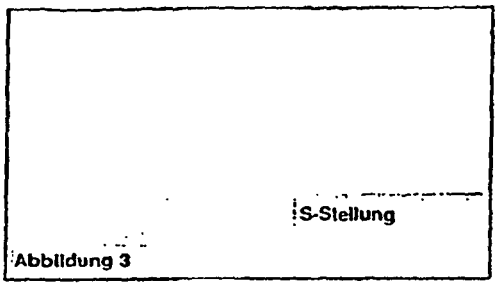

Abbildung 3

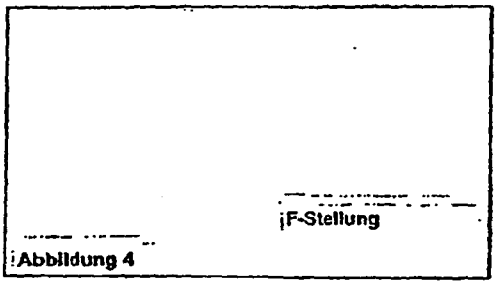

Abbildung 4

PR 0443

Die Bolzeneinheit

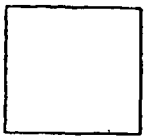

Die Bolzeneinheit verriegelt die Patrone in der Kammer.

Einlegen der Bolzeneinheit:

1. Die Schußwaffe in eine sichere Richtung richten.
2. Den Sicherheitsschalter in die "S"-Stellung bringen.
3. Die Ansätze der Bolzeneinheit mit der Aufnahme ausrichten. Siehe Abbildung 5.
4. Die Bolzeneinheit in die Aufnahme gleiten lassen und ganz eindrücken.
5. Um die Bolzeneinheit in die geschlossene Stellung zu bringen, den Bolzengriff herunterdrücken.

Entfernen der Bolzeneinheit:

1. Die Schußwaffe in eine sichere Richtung richten.
2. Den Sicherheitsschalter in die "S"-Stellung bringen.
3. Den Abzug nicht berühren, während Sie den Sicherheitsschalter bewegen.
4. Den Bolzengriff anheben.
5. Den Bolzengriff ganz zurückziehen.
6. Bolzenanschlagfreigabe drücken. Siehe Abbildung 5.
7. Beim Drücken der Bolzenanschlagfreigabe den Bolzen aus der Schußwaffe herausziehen.

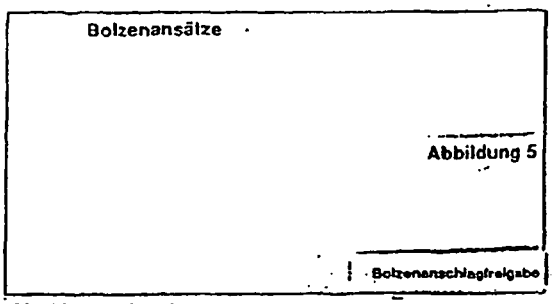

Abbildung 5

Die Abzugseinheit:

Die Schußwaffe wird durch Druck auf den Abzug gefeuert.

Der Abzug wird im Werk eingestellt.

Alle Einstellungen des Abzugs müssen im Werk oder von einem VON REMINGTON EMPFOHLENEN BÜCHSENMACHER vorgenommen werden.

ACHTUNG: NIEMALS den Abzugsmechanismus ausbauen oder Einstellungen des Abzugs oder der Abzugseinheit vornehmen.

ACHTUNG: NIEMALS den Finger auf den Abzug legen, wenn Sie nicht beabsichtigen, die Schußwaffe zu feuern.

Der Lauf

Der Lauf muß innen sauber und von Blockierungen frei sein.

I. Überprüfen des Laufs von innen:

1. Die Schußwaffe in eine sichere Richtung richten.
2. Den Sicherheitsschalter in die "S"-Stellung bringen.
3. Den Bolzengriff anheben.
4. Den Bolzen ganz zurückziehen.
5. Munition aus der Kammer oder dem Magazin entfernen. Siehe Seite 8.
6. Bolzen entfernen. Siehe Seite 5.
7. Innen durch den Lauf hindurch sehen, von der Kammer bis zur Mündung. Siehe Abbildung 1.

II. Entfernen von Gegenständen aus dem Lauf:

1. Eine Putzstange der richtigen Größe gebrauchen.
2. Die Putzstange von dem Kammerende ganz durch den Lauf schieben, bis sie aus der Mündung austritt.
3. Wenn ein Gegenstand nicht leicht mit einer Putzstange aus dem Lauf herausgeschoben werden kann, ist die Schußwaffe an das Werk oder an einen VON REMINGTON EMPFOHLENEN BUCHSENMACHER zu senden.

ACHTUNG: NIEMALS versuchen, einen Gegenstand aus dem Lauf zu entfernen, indem Sie eine Patrone laden und abfeuern. Dabei besteht die Gefahr, daß der Lauf oder die Patronenhülse bersten könnte, was zu schwerer Verletzung führen kann.

III. Putzen des Gewehrlaufes, siehe Seite 10.

Bevor Sie die Schußwaffe laden ist sicherzustellen, daß der Lauf von innen sauber und nicht blockiert ist.

Besonders zu beachten:
Modell 700 Ladeanweisungen für .220 SWIFT-Patronen

Im Gegensatz zu anderen Patronen, die in die Kammer der Schußwaffe Modell 700 geladen werden, sind die .220 SWIFT- Patronen mit Halbrand versehen. Um also richtigen Vorschub sicherzustellen muß der Rand der oberen Patrone vor dem Rand der darunterliegenden Patrone liegen.

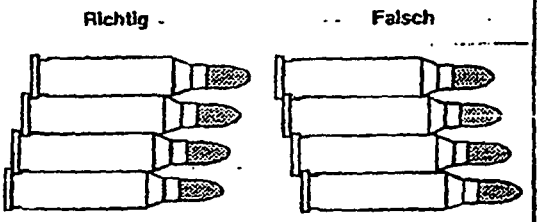

Laden der Schußwaffe

Es gibt drei Arten der Gewehre Modell 700: Eine mit Bodenplatte, eine ohne Bodenplatte und eine mit abnehmbarem Magazinkasten.

I. Laden einer einzigen Patrone:

1. Die Schußwaffe in eine sichere Richtung richten.
2. Den Sicherheitsschalter in die "S"-Stellung bringen.
3. Den Bolzengriff anheben.
4. Den Bolzengriff ganz zurückziehen.
5. Eine Patrone des richtigen Kalibers auf den Kammeraufhalter oder in die Kammer legen. Siehe Abbildung 6.
6. Den Bolzengriff nach vorne gleiten lassen, dann herunterdrücken, um die Patrone in der Kammer zu verriegeln.

Die Schußwaffe ist jetzt geladen.

7. Um die Schußwaffe zu feuern, den Sicherheitsschalter in die "F"-Stellung bringen.

Die Schußwaffe ist jetzt bereit zu feuern.

II. Laden der Kammer und des Magazins:

1. Die Schußwaffe in eine sichere Richtung richten.
2. Den Sicherheitsschalter in die "S"-Stellung bringen.
3. Den Bolzengriff anheben.
4. Den Bolzengriff ganz zurückziehen.
5. Vier Patronen des richtigen Kalibers eine zur Zeit in das Magazin laden. Wenn die Schußwaffe ein Modell Magnum ist, können nur drei Patronen geladen werden. Wenn die Schußwaffe ein Modell Kaliber 17, 222 oder 223, können fünf Patronen in das Magazin geladen werden. Die Kugeln in Richtung auf die Kammer ausrichten. Siehe Abbildung 6.
6. Eine Patrone in die Kammer einlegen.
7. Die Patronen im Magazin mit den Fingern ganz nach unten drücken. Die Bolzeneinheit langsam nach vorne gleiten lassen, damit der Bolzen über die Patronen im Magazin hinweg gleitet.
8. Den Bolzengriff herunterdrücken.

Die Kammer und das Magazin sind jetzt völlig geladen.

9. Um die Schußwaffe zu feuern, den Sicherheitsschalter in die "F"-Stellung bringen.

Die Schußwaffe ist jetzt bereit zu feuern.

ACHTUNG: Die Patronen immer auf richtigen Kaliber überprüfen, bevor die Schußwaffe geladen wird.

Patrone wie dargestellt laden

Abbildung 6

PR 0446

Alternativverfahren zum Laden der Kammer und des Magazins: (Bei Modell 700 mit abnehmbarem Magazinkasten)

1. Die Schußwaffe in eine sichere Richtung richten.
2. Den Sicherheitsschalter in die "S"-Stellung bringen.
3. Den Bolzengriff anheben.
4. Den Bolzengriff ganz zurückziehen.
5. Beide Magazinverriegelungen nach innen drücken und den Magazinkasten aus der Schußwaffe herausnehmen. Siehe Abbildung 7.
6. Vier Patronen des richtigen Kalibers eine zur Zeit in den Magazinkasten laden, dabei die Patronen in Richtung auf die Rückseite des Magazins schieben. Wenn die Schußwaffe ein Modell Magnum ist, können nur drei Patronen geladen werden. Die Kugeln in Richtung auf die Kammer ausrichten. Siehe Abbildung 7.
7. Den Magazinkasten in die Abzugschutzöffnung legen und drücken, bis beide Verriegelungen in der ganz verriegelten Stellung einrasten.

Das Magazin ist jetzt völlig geladen.

8. Eine Patrone des richtigen Kalibers in die Kammer einlegen. Siehe Abbildung 6.
9. Die Patronen im Magazin mit den Fingern ganz nach unten drücken. Die Bolzeneinheit langsam nach vorne gleiten lassen, damit der Bolzen über die Patronen im Magazin hinweg gleitet.
10. Den Bolzengriff herunterdrücken, um die Patrone in der Kammer zu verriegeln.

Die Kammer und das Magazin sind jetzt völlig geladen.

11. Um die Schußwaffe zu feuern, den Sicherheitsschalter in die "F"-Stellung bringen.

Die Schußwaffe ist jetzt bereit zu feuern.

ACHTUNG: Die Patronen immer auf richtigen Kaliber überprüfen, bevor die Schußwaffe geladen wird.

Abbildung 7

Beide Magazinverriegelungen nach innen drücken

Entladen der Schußwaffe

Es gibt drei Arten der Gewehre Modell 700: Eine mit Bodenplatte, eine ohne Bodenplatte und eine mit abnehmbarem Magazinkasten.

Anweisungen für Modelle mit Bodenplatte:

1. Die Schußwaffe in eine sichere Richtung richten.
2. Den Sicherheitsschalter in die "S"-Stellung bringen.
3. Den Bolzengriff anheben.
4. Eine Hand über die Auswurföffnung legen.
5. Den Bolzengriff mit der anderen Hand langsam zurückziehen, um die Patrone aus der Kammer zu entfernen.
6. Die Patrone festhalten und aus der Schußwaffe herausnehmen.
7. Die Hand unter die Bodenplatte legen.

8. Die Bodenplattenverriegelung drücken, um die Bodenplatte freizugeben. Siehe Abbildung 8. Die Magazinfeder und der Aufhalter werden aus dem Magazin freigegeben.

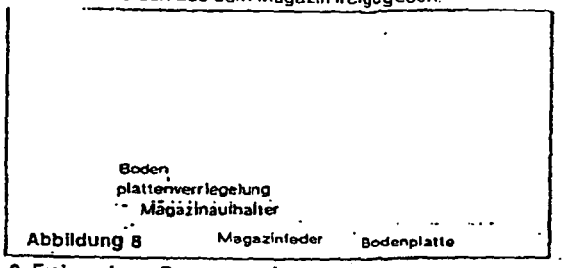

Abbildung 8

9. Freigegebene Patronen entfernen.
10. Den Magazinaufhalter eindrücken, dann die Bodenplatte schließen.

ACHTUNG: Die Kammer und das Magazin überprüfen, um sicherzustellen, daß sich keine Patronen mehr in der Schußwaffe befinden.

Anweisungen für Modelle ohne Bodenplatte:

1. Die obigen Schritte 1 bis 6 wiederholen.
2. Die Mündung weiterhin in eine sichere Richtung richten. Den Bolzengriff langsam nach vorne schieben, bis eine Patrone aus dem Magazin freigegeben wird. VORSICHT: Die Patrone kann in die Kammer rutschen, falls der Bolzen zu weit geschoben wird. Siehe Hinweis unten.
3. Den Bolzengriff ganz zurückziehen und die Patrone aus der Auswurföffnung herausnehmen.
4. Schritte 2 und 3 wiederholen, bis das Magazin leer ist.

ACHTUNG: Die Kammer und das Magazin überprüfen, um sicherzustellen, daß sich keine Patronen mehr in der Schußwaffe befinden.

ZU BEACHTEN: Falls der Bolzen ganz nach vorne gedrückt wird und eine Patrone in die Kammer rutscht, kann die Schußwaffe gefeuert werden. Normalerweise gleiten die Patronen aus der Kammer, wenn der Bolzen zurückgezogen wird. Wenn eine Patrone in der Kammer bleibt, ist die Mündung in eine sichere Richtung zu richten, der Bolzen ganz nach vorne zu schieben und der Bolzengriff zu drücken, um den Bolzen zu schließen. Dann die obigen Schritte 1 bis 4 wiederholen.

Anweisungen für Modelle mit abnehmbarem Magazinkasten:

1. Die Schußwaffe in eine sichere Richtung richten.
2. Den Sicherheitsschalter in die "S"-Stellung bringen.
3. Den Bolzengriff anheben.
4. Eine Hand über die Auswurföffnung legen.
5. Den Bolzengriff mit der anderen Hand langsam zurückziehen, um die Patrone aus der Kammer zu entfernen.
6. Beide Magazinverriegelungen nach innen drücken und den Magazinkasten aus der Schußwaffe herausnehmen. Siehe Abbildung 7.
7. Die Patronen aus dem Magazinkasten entfernen.
8. Den Magazinkasten wieder einlegen.

ACHTUNG: Die Kammer und das Magazin überprüfen, um sicherzustellen, daß sich keine Patronen mehr in der Schußwaffe befinden.

Einstellen der Kimme und des Visiers

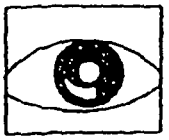

Alle Modelle mit Kimme bzw. Visier werden im Werk so eingestellt, daß sie ein Ziel auf 90 Meter treffen.

Einstellen der Kimme:

Die Kimme in der Richtung bewegen, die nötig ist, um die Kugel auf das Ziel auftreffen zu lassen.

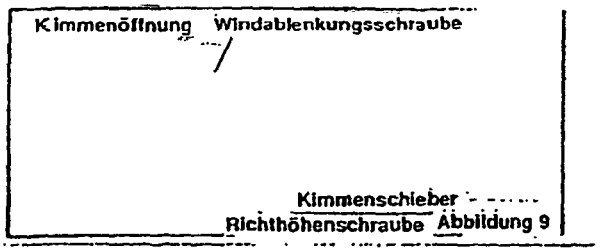

Abbildung 9

ZU BEACHTEN: Um zusätzliche Informationen bezüglich Ballistik und Schußlinie zu erhalten, siehe den REMINGTON-Katalog.

Visierfernrohr: Oben in der Aufnahme befinden sich Löcher zur Visierfernrohr- Montage.

Aufschlag auf Ziel	Einstellungen
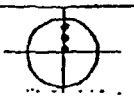 Kugel trifft über der	a. Richthöhenschraube der Kimme Mitte auf. lockern. b. Kimme nach unten (hinten) auf der Rampe gleiten lassen. c. Richthöhenschraube festziehen.
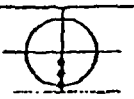 Kugel trifft unter der	a. Richthöhenschraube der Kimme Mitte auf. lockern. b. Kimme nach oben (vorne) auf der Rampe gleiten lassen. c. Richthöhenschraube festziehen.
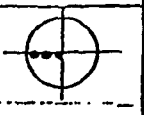 Kugel trifft links	a. Windablenkungsschraube der Kimme neben der Mitte auf. lockern. b. Kimmenöffnung nach rechts gleiten lassen. c. Windablenkungsschraube festziehen.
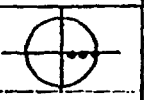 Kugel trifft rechts	a. Windablenkungsschraube der Kimme neben der Mitte auf. lockern. b. Kimmenöffnung nach links gleiten lassen. c. Windablenkungsschraube festziehen.

PR 0449

Schmieren und Wartung

Schmieren: Übermäßiges Schmieren ist unbedingt zu vermeiden. Ein dünner Film Rem™-Öl verhindert Rost. Siehe Hinweis unten.

Wenn die Schußwaffe weggelegt werden soll, ist sie sorgfältig zu putzen und gründlich zu ölen. Die Außenflächen sind gelegentlich mit einem dünnen Film Rem™-Öl abzuwischen.

Wenn die Schußwaffe wieder in Gebrauch genommen wird, sind überschüssige Schmiermittel zu entfernen. Die Kammer und die Bohrung müssen gründlich trockengewischt werden.

ZU BEACHTEN: Remington Rem™-Öl mit DuPont Teflon® Naßschmiermittel ist von Ihrem örtlichen Fachhändler erhältlich. Wenn dieser das Öl nicht auf Lager hat, bitten Sie ihn, dieses vom Remington-Distributoren zu bestellen.

Lauf putzen:

ACHTUNG: Die Kammer und das Magazin überprüfen, um sicherzustellen, daß sich keine Patronen in der Schußwaffe befinden.

1. Die mit einer hochwertigen Putzausrüstung mitgelieferten Vorrichtungen gebrauchen. Empfehlungen können Sie von Ihrem von Remington genehmigten Büchsenmacher einholen.
2. Die Bolzeneinheit entfernen. Siehe Anweisungen auf Seite 5.
3. Die Putzbürste des richtigen Kalibers auswählen und die Bürste an die Putzstange befestigen.
4. Die Putzbürste in das Gewehr-Putzmittel tauchen.

ZU BEACHTEN: Beim Putzen sollte der Lauf waagerecht liegen und die Auswurföffnung nach unten gerichtet sein. Den Lauf immer von der Kammer aus in Richtung auf die Mündung putzen.

5. Die Putzbürste mehrmals durch den Lauf schieben.
6. Die Bürste von der Stange abnehmen, Spitze mit Putzlappen befestigen und durch die Bohrung schieben.
7. Mehrmals wiederholen, wobei jedesmal ein frischer Putzlappen zu verwenden ist, bis der Lappen keinen Schmutz aufweist.
8. Einen sauberen mit Rem™-Öl getränkten Putzlappen durch den Lauf schieben.
9. Einen sauberen, trockenen Putzlappen durch den Lauf schieben, um überschüssiges Schmiermittel zu entfernen.
10. Mit einem weichen, sauberen Tuch einen dünnen Film Rem™-Öl außen auf den Lauf auftragen.
11. Nachdem der Lauf geputzt wurde, die Aufnahme und die Abzugseinheit putzen.

ACHTUNG: Diese Schußwaffe ist regelmäßig von der Remington Arms Company, Inc. oder einem VON REMINGTON EMPFOHLENEN BÜCHSENMACHER zu überprüfen. Dadurch wird richtige Kontrolle und der nötige Ersatz abgenutzter oder beschädigter Teile sichergestellt.

Aufnahme und Abzugseinheit putzen:

1. Den Sicherheitsschalter in die "S"-Stellung bringen.
2. Die Bolzeneinheit entfernen. Siehe Anweisungen auf Seite 5.
3. Das Gewehr auf den Kopf stellen.
4. Die Schrauben von dem Abzugschutz entfernen. Siehe Abbildung 10.

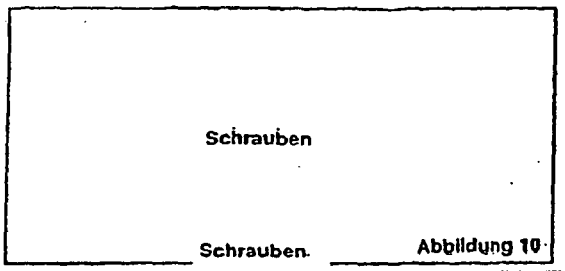

Abbildung 10

5. Den Gewehrschaft von der Aufnahme und der Abzugseinheit abheben

Nur für Modelle ohne Bodenplatte:

Die Magazinfeder und den Aufhalter von der Aufnahme entfernen.

ZU BEACHTEN: Die Aufnahme und die Abzugseinheit als Einheit mit Rem™-Öl putzen.

6. Die Aufnahme und die vier Spitzen der Abzugseinheit mit Rem™-Öl besprühen. Siehe Abbildung 11. 15 Minuten lang stehen lassen. Nochmals besprühen, um die Komponenten abzuspülen. Überschüssigen Schmierstoff abschütteln.

nents. Shake off excess lubricant.

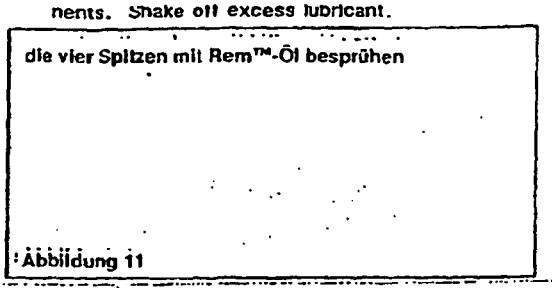

Abbildung 11

ACHTUNG: Übermäßiger Gebrauch eines nicht empfohlenen Schmiermittels kann zu bedeutender Funktionsstörung und möglicherweise zu versehentlicher Feuerung führen.

Montage von Modellen ohne Bodenplatte:

1. Den Magazinaufhalter und die Feder in das Magazin legen.
2. Den Gewehrschaft über die Aufnahme und die Abzugseinheit legen.
3. Die Abzugschutzschrauben wieder einlegen und festziehen.

ACHTUNG: Bevor die Bolzeneinheit wieder eingesetzt wird, sicherstellen, daß sich im Lauf keine Blockierungen befinden.

4. Die Bolzeneinheit wieder einlegen. Siehe Anweisungen auf Seite 5.

Nur für Modelle mit Bodenplatte:

Das Magazin ganz nach unten in die Aufnahme legen.

Modelle mit Bodenplatte oder abnehmbarem Magazin:

1. Die Abzugschutzeinheit auf den Gewehrschaft montieren.
2. Den Gewehrschaft über die Aufnahme und die Abzugseinheit legen.
3. Die Abzugschutzschrauben wieder einlegen und festziehen.
4. Die Bodenplatte schließen bzw. das abnehmbare Magazin wieder einlegen.

ACHTUNG: Bevor die Bolzeneinheit wieder eingesetzt wird, sicherstellen, daß sich im Lauf keine Blockierungen befinden.

5. Die Bolzeneinheit wieder einlegen. Siehe Anweisungen auf Seite 5.

ACHTUNG: Nachdem die Abzugseinheit geputzt wurde, sind die Kammer und das Magazin zu überprüfen, um sicherzustellen, daß sich keine Patronen in der Schußwaffe befinden. Den Sicherheitsschalter in die "F"-Stellung bringen. Den Bolzen zuschnappen. Der Zündstift muß gespannt bleiben. Um das zu überprüfen ist der Abzug zu drücken. Der Zündstift muß fallen. Dieser Test ist mindestens zehnmal zu wiederholen. Falls der Zündstift nicht gespannt bleibt, wenn der Bolzen zugeschnappt wird, ist die Schußwaffe an das Werk oder an einen VON REMINGTON EMPFOHLENEN BÜCHSENMACHER einzusenden.

Putzintervalle:

1. Vor und nach längerer Lagerung.
2. Wenn das Gewehr harten Bedingungen ausgesetzt war, wie z.B. Schießen im Regen, Schnee, Eisregen oder in Salzwasserbereichen.
3. Wenn das Gewehr schmutzigen Bedingungen ausgesetzt war, z.B. es hat draußen auf der Erde gelegen, wurde in Schlamm fallengelassen, usw.

ZU BEACHTEN: Obwohl das Gewehr Modell 700 aus Edelstahl und Kunststoff so konstruiert und hergestellt wurde, daß es besseren Korrosionsschutz bietet, ist angemessene Pflege erforderlich, damit Ihre Schußwaffe weiterhin gute Funktion und gutes Aussehen bietet. Nach längerem Gebrauch ist die Schutzschicht auf galvanisch behandelten Teilen möglicherweise so weit abgenutzt, daß der Korrosionsschutz verringert ist. Solche abgenutzten Teile sind zu ersetzen, um die Integrität des Korrosionsschutzes sicherzustellen.

ACHTUNG: Nach jedem Gebrauch sind die in diesem Handbuch angegebenen Anweisungen bezüglich Schmieren und Wartung zu befolgen. Wenn die Schußwaffe in Wasser eingetaucht wurde, ist sie sobald wie möglich gründlich zu putzen und zu schmieren. Falls sie in Salzwasser eingetaucht wurde, zuerst alle Teile mit frischem Wasser spülen, dann die Schußwaffe trocknen, putzen und schmieren. Wenn die Schußwaffe nicht richtig funktioniert, ist sie von einem qualifizierten Büchsenmacher zu reparieren, bevor sie wieder in Gebrauch genommen wird. Bei Mißachten dieses Warnhinweises kann Fehlfunktion der Schußwaffe eintreten, die zu schwerer Verletzung führen kann.

Anweisungen zum Putzen der Bolzeneinheit

Demontage der Bolzeneinheit:

1. Die Bolzeneinheit von der Schußwaffe entfernen. Siehe Anweisungen auf Seite 5.
2. Die Kerbe am Zündstift über eine Metallkante legen. Die Bolzeneinheit vom Zündstift wegziehen. In den Schlitz in der Nähe der rückwärtigen Kante des Zündstiftkopfes eine Münze einstecken. Siehe Abbildung 12.
3. Die Bolzeneinheit festhalten und den Bolzenstöpsel gegen den Uhrzeigersinn drehen, bis die Zündstifteinheit aus der Bolzeneinheit herausgezogen werden kann.

VORSICHT: Die Zündstifteinheit als Einheit putzen.

4. Alle Teile mit Gewehr-Putzmittel reinigen. Mit einem sauberen Tuch trocknen.
5. Einen dünnen Film Rem™-Öl auftragen.

Montage:

1. Die Zündstifteinheit hinten in die Bolzeneinheit einlegen.
2. Den Bolzenstöpsel per Hand in der Bolzeneinheit festziehen.
3. Die Münze aus dem Schlitz im Zündstiftkopf herausziehen.
4. Den Bolzenstöpsel drehen, bis der Zündstiftkopf in der kleinen Kerbe am hinteren Rand des Bolzens einrastet. Der Bolzen ist jetzt gespannt. Siehe Abbildung 13.

ZU BEACHTEN: Der Bolzen muß gespannt sein, um in das Gewehr montiert zu werden.

5. Die Bolzeneinheit in das Gewehr montieren. Siehe Anweisungen auf Seite 5.

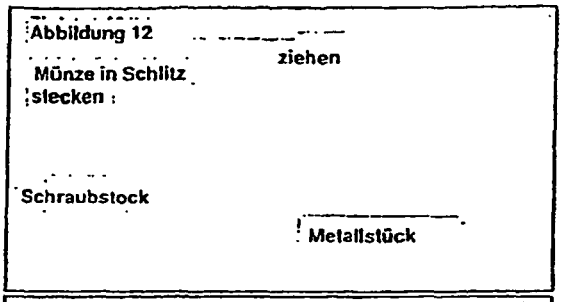

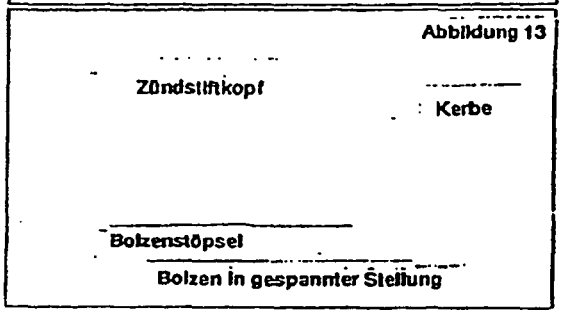

PR 0453

Wie man Ersatzteile und Service von REMINGTON erhält

Wie man Ersatzteile und Service von REMINGTON erhält

Sie können die in den Zeichnungen dargestellten Ersatzteile von jedem von Remington zugelassenen Vertriebsvertreter erhalten. Eine Liste aller von Remington zugelassenen Vertriebshändler wird mit der Schußwaffe mitgeliefert.

Falls die Liste fehlt, bestellen Sie das Heft:
«Remington Authorized Gunsmiths»
(Von Remington zugelassene Büchsenmacher)

von:

Customer Service Division
Remington Arms Company, Inc.
Ilion, New York 13357-1888
United States of America

oder senden Sie Ihre Anfrage per Fax an: (USA) 315-895-3659

Bei Korrespondenz an einen von Remington zugelassenen Vertriebshändler geben Sie bitte die Modellnummer, die Seriennummer, das Kaliber und die Ersatzteilbezeichnung, wie sie auf den folgenden Seiten erscheint, an. Der Vertriebshändler steht gerne bereit, Ihnen die Kosten für diese Ersatzteile, Arbeit, Versand, Versicherung und Steuern zu nennen.

Service:

Um Ihre Schußwaffe von einem von Remington zugelassenen Büchsenmacher warten zu lassen, beziehen Sie sich auf das Heft «Remington Authorized Gunsmiths» (Von Remington zugelassene Büchsenmacher). Aus Sicherheitsgründen ist es unabdingbar, daß Sie Ihre Schußwaffe nur durch einen von Remington zugelassenen Büchsenmacher warten lassen.

Wenn Sie Ihre Schußwaffe einsenden, geben Sie bitte das Modell, die Seriennummer und das Kaliber an. Legen Sie eine kurze Beschreibung des Problems bei, und geben Sie Ihren Namen, Ihre Adresse mit Postleitzahl und Land, sowie Ihre Telefon- bzw. Telefaxnummer mit Land- und Stadtvorwahl an.

Diese Informationen sind in einem Umschlag in den Versandkarton zu legen. Befolgen Sie die Versandanweisungen, die Sie von Ihrem von Remington zugelassenen Büchsenmacher erhalten.

Aus Sicherheitsgründen ist die Schußwaffe vor dem Versand zu entladen. NIEMALS Munition mit der Schußwaffe verpacken.

Modell 700

Gewehr mit Bolzenverschluß, Mittenfeuerung

Bestellen von Ersatzteilen und Service

MODELL 700, ERSATZTEILLISTE

Ersatzteile können ohne vorherige Bekanntgabe geändert werden:
FOB Ilion, New York, U.S.A.

ANSICHT-NR.	ERSATZTEILBEZEICHNUNG
	ZU BEACHTEN: Kaliber 30-06, Grundausstattung, wird nachstehend aufgeführt. Siehe perspektivische Darstellung der Einzelteile zur richtigen Bezeichnung der Teile.
1	Laufeinheit
2	Bolzeneinheit
3	Bolzenstöpsel
4	Bolzenanschlag (Verfügbarkeit eingeschränkt)
5	Bolzenstöpselstift (Verfügbarkeit eingeschränkt)
6	Bolzenanschlagfeder (Verfügbarkeit eingeschränkt)
7	Kolbenblechgestell (neuer Typ nicht dargestellt
	Kolbenblecheinsatz (neuer Typ nicht dargestellt)
8	Kolbenblechdistanzhalter
9	Kolbenblechschraube
10	Mittenschutzschraube, Qualität ADL
11	Auswerfer
12	Auswerferstift
13	Auswerferfeder
14	Abziehvorrichtung
16	Zündstifteinheit
17	Zündstiftkreuzstift
18	Bodenplattenverriegelung, Qualität BDL
19	Bodenplattenverriegelungsstift, Qualität BDL
20	Bodenplattenverriegelungsfeder, Qualität BDL
21	Bodenplattenschwenkstift, Qualität BDL
22	Vorderschutzschraube (BDL)
23	Vorderschutzschraubenbüchse, Qualität ADL
24	Visier Visier (niedrig)
25	Visierrampe, BDL
26	Visierrampenschraube
27	Visierhaube

ANSICHT-NR.	ERSATZTEILBEZEICHNUNG
29	Vorderschwenkschraube
	Griffkappe, Qualität BDL (nicht dargestellt)
	Griffkappendistanzhalter (nicht dargestellt)
30	Magazin, Qualität ADL
30a	Magazineinheit, BDL
	(abnehmbares Magazin nicht dargestellt)
	Magazin, Qualität BDL (nicht dargestellt)
31	Magazinaufhalter, ADL
	Magazinaufhalter, BDL
	Magazinlaschenschraube, Qualität ADL
32	Magazinfeder, Qualität ADL
	Magazinfeder, Qualität BDL
33	Hauptfeder
34	Hinterschutzschraube
35	Kimmenöffnung
	Kimmeneinheit
	Kimmensockel
37	Kimmensockelschraube (2)
38	Kimmenschieber
39	Richthöhenschraube
40	Hintere Schwenkstelle
41	Aufnahmestöpselschraube
42	Verschlußstangenstift (Verfügbarkeit eingeschränkt)
44	Gewehrschalteinheit, Qualität ADL
	Gewehrschalteinheit, Qualität ADL
46	Abzugseinheit (Verfügbarkeit eingeschränkt)
47	Abzugschutz, Qualität ADL
48	Abzugschutzeinheit, Qualität BDL
	Abzugschutz (abnehmbares Magazin, nicht dargestellt)
49	Windablenkungsschraube

PR 0456

BLANK

Printed in U.S.A.

Form RD 5461
Rev. 994

PRIVILEGED & CO. IDENTIAL
ATTORNEY/CLIENT COMMUNICATION

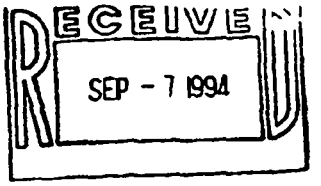

September 1, 1994

TO: R. HASKIN

FROM: K. KEN

RE: MULTI-LINGUAL INSTRUCTION BOOK

It has been decided to put a multi-lingual instruction book in most of our gun boxes. The first application is for the detachable magazine M/700. I have reviewed the text for the English version which is basically a repeat of our existing 700 book with additions to cover the detachable magazine. Smart Communications of New York City prepared the translations of French, German and Spanish.

Blue proofs are due at Ilion shortly. Upon approval, the printer can give us books quickly so we can warehouse the guns.

Please review the English version to see if we need to correct any gross errors. In addition, do we need to have someone else review the translated versions?

KDG:tpp

xc: S. Rensi

Missing page 1-3

PR 0459

IMPORTANT PARTS OF THE FIREARM

THE SAFETY SWITCH

The safety switch provides protection against accidental or unintentional discharge under normal usage when properly engaged and in good working order.

To engage the safety switch, put the switch in the 'S' position. See Picture 3.

Always put the safety switch in the 'S' position before handling, loading or unloading the firearm.

When you are ready to fire the firearm, put the safety switch in the 'F' position to disengage the safety switch. See Picture 4.

Do not touch the trigger while moving the safety switch.

Never pull the trigger when the safety switch is in the 'S' position.

WARNING: The firearm will fire when the trigger is pulled and the safety switch is in the 'F' position.

Even when the safety switch is in the 'S' position, careless handling can cause the firearm to fire. See Safety Rules on Page 2.

Picture 3

Picture 4

THE BOLT ASSEMBLY

The bolt assembly locks the cartridge into the chamber.

TO INSTALL THE BOLT ASSEMBLY:

1. Point the firearm in a safe direction.
2. Put the safety switch in the 'S' position.
3. Align the lugs on the bolt assembly with the receiver. See Picture 5.
4. Slide the bolt assembly into the receiver and push all the way in.
5. To place the bolt assembly in closed position, push the bolt handle down.

TO REMOVE THE BOLT ASSEMBLY:

1. Point the firearm in a safe direction.
2. Put the safety switch in the 'S' position.
3. Do not touch the trigger while moving the safety switch.
4. Raise the bolt handle.
5. Pull the bolt handle all the way back.
6. Push the bolt stop release. See Picture 5.
7. As you push the bolt stop release, slide the bolt from the firearm.

Picture 5

THE TRIGGER ASSEMBLY:

Pulling the trigger fires the firearm.

The trigger is adjusted at the factory. All adjustments to the trigger must be made by the factory or a REMINGTON RECOMMENDED GUNSMITH.

WARNING: NEVER remove the trigger mechanism, or make adjustments to the trigger or trigger assembly.

WARNING: NEVER put your finger on the trigger unless you are going to fire the firearm.

THE BARREL

The inside of the barrel must be clean and free of obstructions.

I. TO CHECK THE INSIDE OF THE BARREL:

1. Point the firearm in a safe direction.
2. Put the safety switch in the 'S' position.
3. Raise the bolt handle.
4. Pull the bolt all the way back.
5. Remove any ammunition from the chamber or magazine. See Page 8.
6. Remove the bolt. See Page 5.
7. Look through the inside of the barrel from the chamber end to the muzzle. See Picture 1.

II. TO REMOVE OBJECT FROM INSIDE THE BARREL:

1. Use the correct size cleaning rod.
2. Push the cleaning rod from the chamber end all the way through the barrel, until the rod comes out of the muzzle.
3. If an object cannot be easily pushed out of the barrel with a cleaning rod, return the firearm to the factory or a REMINGTON RECOMMENDED GUNSMITH.

WARNING: NEVER try to remove an object from the barrel by loading another cartridge and firing. This may cause the barrel to burst or a cartridge case to rupture and cause serious personal injury.

III. TO CLEAN THE BARREL FOLLOW INSTRUCTIONS SHOWN ON PAGE 10.

Before loading the firearm, make sure the inside of the barrel is free of dirt or other obstructions.

SPECIAL NOTICE

MODEL 700 .220 SWIFT LOADING INSTRUCTIONS

Unlike other cartridges which are chambered in the Model 700, the .220 SWIFT is a semi-rimmed cartridge. Therefore, to ensure proper feeding, make sure that the rim of the top cartridge is ahead of the rim of the cartridge below.

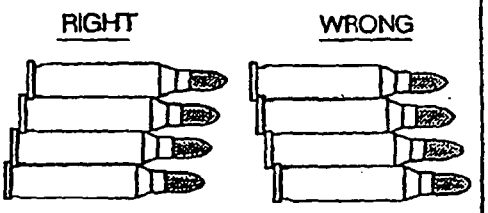

TO LOAD THE FIREARM

There are three types of Model 700 rifles: one with a FLOOR PLATE, one without a FLOOR PLATE and one with a DETACHABLE MAGAZINE BOX.

I. TO LOAD ONE CARTRIDGE ONLY:

1. Point the firearm in a safe direction.
2. Put the safety switch in the 'S' position.
3. Raise the bolt handle.
4. Pull the bolt handle all the way back.
5. Put one cartridge of the correct caliber on the magazine follower or in the chamber. See Picture 6.
6. Slide the bolt handle forward, then push the bolt handle down to lock the cartridge into the chamber.

THE FIREARM IS NOW LOADED.

7. To fire the firearm put the safety switch in the 'F' position.

THE FIREARM IS READY TO FIRE.

II. TO LOAD THE CHAMBER AND MAGAZINE:

1. Point the firearm in a safe direction.
2. Put the safety switch in the 'S' position.
3. Raise the bolt handle.
4. Pull the bolt handle all the way back.
5. Push four cartridges of the correct caliber, one at a time, into the magazine. If the firearm is a magnum, you can only load three cartridges. If the firearm is a 17, 222, or 223 caliber, the magazine will hold five cartridges. Keep the bullets aligned toward the chamber. See Picture 6.
6. Put one cartridge into the chamber.
7. Use your fingers to push the cartridges in the magazine all the way down. Slowly slide the bolt assembly forward, so that the bolt slides over the top of the cartridges in the magazine.
8. Push the bolt handle down.

THE CHAMBER AND MAGAZINE ARE NOW FULLY LOADED.

9. To fire the firearm put the safety switch in the 'F' position.

THE FIREARM IS READY TO FIRE.

WARNING: Always check the cartridge for the correct caliber before loading the firearm.

Picture 6

ALTERNATE METHOD TO LOAD THE CHAMBER AND MAGAZINE: (FOR MODEL 700 WITH A DETACHABLE MAGAZINE BOX)

1. Point the firearm in a safe direction.
2. Put the safety switch in the 'S' position.
3. Raise the bolt handle.
4. Pull the bolt handle all the way back.
5. Press both magazine latches inward and pull the magazine box from the firearm. See Picture 7.
6. Push four cartridges of the correct caliber, one at a time, into the magazine box, pushing the cartridges to the rear of the magazine. If the firearm is a magnum, you can only load three cartridges. Keep the bullets aligned toward the chamber. See Picture 7.
7. Place the magazine box into the trigger guard opening and push it until both latches snap into the fully latched position.

THE MAGAZINE IS NOW FULLY LOADED.

8. Put one cartridge of the correct caliber into the chamber. See Picture 6.
9. Use your fingers to push the cartridges in the magazine box all the way down. Slowly slide the bolt assembly forward, so that the bolt assembly slides over the top of the cartridges in the magazine box.
10. Push the bolt handle down to lock the cartridge into the chamber.

THE CHAMBER AND MAGAZINE ARE NOW FULLY LOADED.

11. To fire the firearm put the safety switch in the 'F' position.
THE FIREARM IS READY TO FIRE.

WARNING: Always check the cartridge for the correct caliber before loading the firearm.

Picture 7

TO UNLOAD THE FIREARM

There are three types of Model 700 rifles: one with a FLOOR PLATE, one without a FLOOR PLATE and one with a DETACHABLE MAGAZINE BOX.

INSTRUCTIONS FOR THE MODELS WITH A FLOOR PLATE:

1. Point the muzzle of the firearm in a safe direction.
2. Put the safety switch in the 'S' position.
3. Raise the bolt handle.
4. Put one hand over the top of the ejection port.
5. Slowly pull the bolt handle back with your other hand to remove the cartridge from the chamber.
6. Hold cartridge and remove it from the firearm.
7. Put your hand under the floor plate.

8. Push the floor plate latch to release the floor plate. See Picture 8. The magazine spring and follower will be released from the magazine.

Picture 8

9. Remove released cartridges.
10. Push in the magazine follower, then close the floor plate.

WARNING: Check the chamber and the magazine to make sure there are no cartridges in the firearm.

INSTRUCTIONS FOR THE MODELS WITHOUT A FLOOR PLATE:

1. Repeat Steps 1 through 6 above.
2. Keep the muzzle pointed in a safe direction. Push the bolt handle slowly forward until a cartridge is released from the magazine. CAUTION: The cartridge may slide into the chamber if the bolt is pushed too far forward. See Note below.
3. Pull the bolt handle fully back and remove the cartridge from the ejection port.
4. Repeat Steps 2 and 3 until the magazine is empty.

WARNING: Check the chamber and the magazine to make sure there are no cartridges in the firearm.

NOTE: If the bolt is pushed all the way forward, and a cartridge slides into the chamber, the gun can be fired. Normally, the cartridges will slide out of the chamber when the bolt is pulled back. If the cartridge remains in the chamber, point the muzzle in a safe direction, slide the bolt forward all the way and push the bolt handle down to close the bolt. Then repeat Steps 1 through 4 above.

INSTRUCTIONS FOR THE MODELS WITH A DETACHABLE MAGAZINE BOX:

1. Point the firearm in a safe direction.
2. Put the safety switch in the 'S' position.
3. Raise the bolt handle.
4. Put one hand over the top of the ejection port.
5. Slowly pull the bolt handle back with your other hand to remove the cartridge from the chamber.
6. Press both magazine latches inward and pull the magazine box from the firearm. See Picture 7.
7. Remove the cartridges from the magazine box.
8. Replace the magazine box.

WARNING: Check the chamber and the magazine box to make sure there are no cartridges in the firearm.

TO ADJUST THE SIGHTS

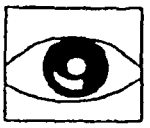

All models with sights are adjusted at the factory to hit a target at 100 yards.

TO ADJUST THE REAR SIGHT:

Move the rear sight in the same direction as you need, to move the bullet on the target.

Picture 9

NOTE: For more information on ballistics and trajectory, see the REMINGTON catalog.

TELESCOPIC SIGHTS:
The top of the receiver has holes for the installation of telescopic sights.

POSITION ON TARGET	ADJUSTMENTS
 Bullet hits above the center.	a. Loosen the elevation screw on the rear sight. b. Slide the rear sight down (backward) on the ramp. c. Tighten the elevation screw.
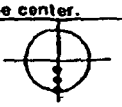 Bullet hits below the center.	a. Loosen the elevation screw on the rear sight. b. Slide the rear sight up (forward) on the ramp. c. Tighten the elevation screw.
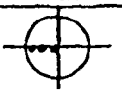 Bullet hits to the left.	a. Loosen the windage screw on the rear sight. b. Slide the rear sight aperture to the right. c. Tighten the windage screw.
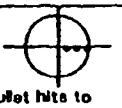 Bullet hits to the right.	a. Loosen the windage screw on the rear sight. b. Slide the rear sight aperture to the left. c. Tighten the windage screw.

Q. opposite direction
i.e. if shooting to the right
move rear site to the left
(if need to move bullet to the left.
move rear sight to the ~~right~~ left.

PR 0466

LUBRICATION AND MAINTENANCE

LUBRICATION:
Over-lubrication should be avoided at all times. A thin coat of Rem™ Oil helps to prevent rusting. See Note below.

When the firearm is to be stored, it should be carefully cleaned and thoroughly oiled. Outside surfaces should be wiped with a light coat of Rem™ Oil occasionally.

When firearm is to be reused, all excess lubrication must be removed. The chamber and bore must be thoroughly wiped dry.

NOTE: Remington Rem™ Oil with DuPont Teflon® Wet Lubricant is available from your local dealer. If your dealer is out of stock, ask him to order Rem™ Oil from his Remington distributor.

TO CLEAN THE BARREL:

WARNING: Check the chamber and magazine to make sure there are no cartridges in the firearm.

1. Use the equipment provided in a good cleaning kit. For recommendations, see your Remington Authorized Gunsmith.
2. Remove the bolt assembly. See instructions on Page 5.
3. Select the correct caliber cleaning brush and attach the brush to the cleaning rod.
4. Put the cleaning brush into the gun cleaning solvent.

NOTE: Barrel should lay horizontally with the ejection port facing down during cleaning. Always clean the barrel from the chamber end to the muzzle.

5. Push the cleaning brush through the barrel several times.
6. Remove brush from rod, attach tip with patch, and push through the bore.
7. Repeat several times, using a new cleaning patch each time, until the patch is not dirty.
8. Push a clean patch saturated with Rem™ Oil through the barrel.
9. Push a clean dry patch through the barrel to remove excess lubricant.
10. Apply a thin coat of Rem™ Oil to the outside of the barrel with a soft clean cloth.
11. After cleaning the barrel, clean the receiver and the trigger assembly.

WARNING: This firearm should be checked periodically by the Remington Arms Company, Inc. or a REMINGTON RECOMMENDED GUNSMITH. This will ensure proper inspection and any necessary replacement of worn or damaged parts.

TO CLEAN THE RECEIVER AND TRIGGER ASSEMBLY:

1. Put the safety switch in the 'S' position.
2. Remove the bolt assembly. See instructions on Page 5.
3. Turn the rifle upside down.
4. Remove the screws from the trigger guard. See Picture 10.

Picture 10

5. Lift the stock away from the receiver and trigger assembly.

MODELS WITHOUT A FLOOR PLATE ONLY:

Remove the magazine spring and follower from the receiver.

NOTE: Clean the receiver and trigger assembly as a unit with Rem™ Oil.

6. Spray the receiver and the four points of the trigger assembly with Rem™ Oil. See Picture 11. Let stand for 15 minutes. Spray again to wash off the components. Shake off excess lubricant.

Picture 11

WARNING: Excessive use of a non-recommended lubricant could cause serious function problems possibly leading to accidental firing.

TO ASSEMBLE MODELS WITHOUT A FLOOR PLATE:

1. Put the magazine follower and the spring into the magazine.
2. Put the stock over the receiver and trigger assembly.
3. Replace and tighten the screws on the trigger guard.

WARNING: Before you replace the bolt asssembly, make sure the barrel is free of obstructions.

4. Replace the bolt assembly. See Instructions on Page 5.

TO ASSEMBLE MODELS WITH A FLOOR PLATE ONLY:

Put the magazine all the way into the bottom of the receiver.

MODELS WITH FLOOR PLATE OR DETACHABLE MAGAZINE:

1. Assemble the trigger guard assembly on the stock.
2. Put the stock over the receiver and trigger assembly.
3. Replace and tighten the trigger guard screws.
4. Close the floor plate or replace detachable magazine.

WARNING: Before you replace the bolt assembly, make sure the barrel is free of obstructions.

5. Replace the bolt assembly. See Instructions on Page 5.

WARNING: After cleaning the trigger assembly, check the chamber and magazine to make sure there are no cartridges in the firearm. Put the safety switch in the 'F' position. Close the bolt smartly. The firing pin must remain cocked. To check, pull the trigger. The firing pin must fall. Repeat the test at least ten times. If the firing pin will not remain cocked when the bolt is closed smartly, return the firearm to the factory or a REMINGTON RECOMMENDED GUNSMITH.

Point the firearm in a safe direction.

CLEANING FREQUENCY:

1. Before and after long term storage.
2. When the rifle has been subjected to adverse conditions such as shooting in the rain, snow, sleet, or salt water areas.
3. When the rifle is exposed to dirty conditions such as lying on the ground outdoors, being dropped in mud, etc.

NOTE: While the Model 700 Stainless Synthetic Rifle has been designed and manufactured to provide improved corrosion protection, only proper care will keep your firearm in good operating condition and maintain its appearance. After extensive use, the protective coating on plated parts may be worn sufficiently to reduce corrosion protection. Such worn parts should be replaced to assure integrity of the corrosion protection.

WARNING: After each use, follow the lubrication and maintenance direction in this instruction book. If the firearm is immersed, it must be thoroughly cleaned and lubricated as soon as possible. In case of salt water immersion, first flush all parts with fresh water, then dry, clean and lubricate the firearm. If the firearm does not function properly, have it corrected by a competent gunsmith before further use. Failure to obey this warning may lead to firearm malfunctions which could result in serious personal injuries.

INSTRUCTIONS FOR CLEANING THE BOLT ASSEMBLY

TO DISASSEMBLE THE BOLT ASSEMBLY:

1. Remove the bolt assembly from the firearm. See instructions on Page 5.
2. Put the notch on the firing pin head over a metal edge. Pull the bolt assembly away from the firing pin. Put a coin into the slot near the back edge of the firing pin head. See Picture 12.
3. Hold the bolt assembly and turn the bolt plug counter clockwise until the firing pin assembly can be removed from the bolt assembly.

CAUTION: Clean the firing pin assembly as a unit.

4. Clean all parts with gun cleaning solvent. Dry with a clean cloth.
5. Apply a thin coat of Rem™ Oil.

TO ASSEMBLE:

1. Put the firing pin assembly into the rear of the bolt assembly.
2. Tighten the bolt plug into the bolt assembly with your hand.
3. Pull the coin from the slot in the firing pin head.
4. Turn the bolt plug until the firing pin head goes into the small notch on the rear rim of the bolt. The bolt is now cocked. See Picture 13.

NOTE: The bolt must be cocked to be assembled into the rifle.

5. Assemble the bolt assembly into the rifle. See instructions on Page 5.

Picture 12

Picture 13

HOW TO ORDER PARTS FROM THE REMINGTON FACTORY

TO ORDER PARTS:

NOTE: Many Remington dealers carry a full line of parts.

1. Use the information on Pages 16 and 17 to find the correct part name and number.
2. Write the model and serial number of your firearm, and the part name and number on the parts order.
3. Send or fax parts order to:
   Arms Service Division
   Remington Arms Company, Inc.
   Ilion, New York 13357-1888

   Parts Department: 315-895-7493
   Parts Department Fax: 315-895-3659
4. When calling an order in, please have your Visa or Mastercard ready. If you wish to pre-pay by check or money order, an exact quote will be given to you over the phone.
5. Sorry, no C.O.D.'s.

WARNING: Use only Remington parts in Remington firearms.

TO ORDER FACTORY SERVICE:

1. Write a short description of the problem and include the model number, serial number and daytime telephone number.
2. Attach a copy to the firearm and another in an envelope on the outside of the box.

WARNING: Make sure gun and magazine are unloaded before shipping.

3. Send by either United Parcel Service or Parcel Post.
4. Get insurance for the firearm.
5. Record the serial number. It is required when calling factory to inquire if firearm has been received for repairs.
6. Send firearms for factory service to:
   Arms Service Division
   Remington Arms Company, Inc.
   Ilion, New York 13357-1888

   Service Department: 315-895-7791
   Service Department Fax: 315-895-3659

INSTRUCTION BOOKS AND GUNSMITH LIST:

To get an instruction book for any Remington firearm, a firearms safety booklet, and a list of recommended gunsmiths, write to Remington Arms Company, Inc., Arms Service Division, Ilion, New York 13357. Give the model, serial number, gauge or caliber.

MODEL 700
Bolt Action Center Fire Rifle

HOW TO ORDER PARTS AND SERVICE

MODEL 700 PARTS LIST

PARTS SUBJECT TO CHANGE WITHOUT NOTICE:
FOB ILION, NEW YORK

VIEW NO.	NAME OF PART	VIEW NO.	NAME OF PART
	NOTE: Basic 30-06 Caliber listed below. See Exploded View for proper identity of parts.	29	Front Swivel Screw
1	Barrel Assembly		Grip Cap, BDL Grade (Not Shown)
2	Bolt Assembly		Grip Cap Spacer (Not Shown)
3	Bolt Plug	30	Magazine, ADL Grade
4	Bolt Stop (Restricted)	30a	Magazine Assembly, BDL
5	Bolt Stop Pin (Restricted)		(Detachable Magazine Not Shown)
6	Bolt Stop Spring (Restricted)		Magazine, BDL Grade (Not Shown)
7	Butt Plate Frame (New Style Not Shown)	31	Magazine Follower, ADL
	Butt Plate Insert (New Style Not Shown)		Magazine Follower, BDL
8	Butt Plate Spacer BDL Grade		Magazine Tab Screw, ADL Grade
9	Butt Plate Screw	32	Magazine Spring, ADL Grade
10	Center Guard Screw ADL Grade		Magazine Spring, BDL Grade
11	Ejector	33	Main Spring
12	Ejector Pin	34	Rear Guard Screw
13	Ejector Spring	35	Rear Sight Aperture
14	Extractor		Rear Sight Assembly
16	Firing Pin Assembly		Rear Sight Base
17	Firing Pin Cross Pin	37	Rear Sight Base Screw (2)
18	Floor Plate Latch, BDL Grade	38	Rear Sight Slide
19	Floor Plate Latch Pin, BDL Grade	39	Elevation Screw
20	Floor Plate Latch Spring, BDL Grade	40	Rear Swivel
21	Floor Plate Pivot Pin, BDL Grade	41	Receiver Plug Screw
22	Front Guard Screw (BDL)	42	Sear Pin (Restricted)
23	Front Guard Screw Bushing, ADL Grade	44	Stock Assembly, ADL Grade
24	Front Sight		Stock Assembly, BDL Grade
	Front Sight (Low)	46	Trigger Assembly (Restricted)
25	Front Sight Ramp BDL	47	Trigger Guard, ADL Grade
26	Front Sight Ramp Screw	48	Trigger Guard Assembly, BDL Grade
27	Front Sight Hood		Trigger Guard, (Detachable Magazine Not Shown)
		49	Windage Screw

IMPORTANT

LIRE CE LIVRET AVANT TOUTE UTILISATION DE LA CARABINE

LIVRET D'INSTRUCTIONS

Carabine à culasse mobile à percussion centrale
Modèle 700

PR 0474

Carabine modèle 700 à percussion centrale

Félicitations sur votre choix d'une carabine Remington. Avec un bon entretien, elle vous servira pendant de longues années.

Pour obtenir les meilleurs résultats, nous préconisons les munitions de marque Remington. Ce sont elles qui servent, lors des essais en usine, à vérifier la conformité à nos normes exigeantes de fonctionnement et de performances

Illustration 1

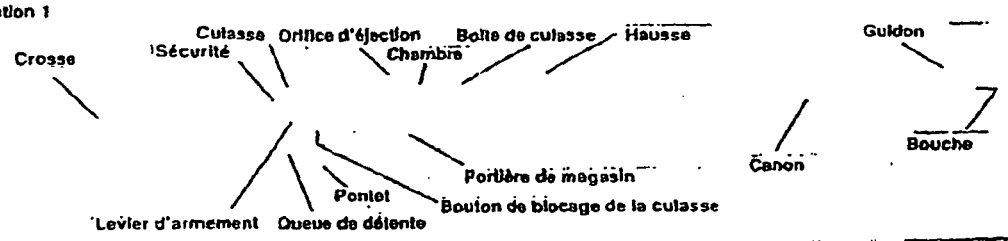

L'illustration ci-dessus représente les éléments principaux de la CARABINE MODELE 700 À PERCUSSION CENTRALE. Elle est destinée à faciliter la compréhension des instructions du présent manuel.

Illustration 2 - Munition

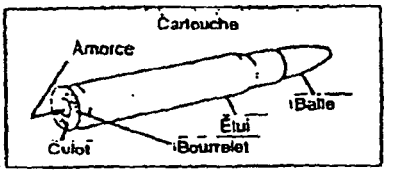

Cette illustration représente les différents éléments de la munition .

REGLES DE SÉCURITÉ

ATTENTION DANGER

VEUILLEZ LIRE ATTENTIVEMENT LES REGLES DE SÉCURITÉ CI-DESSOUS. Apprenez à manipuler votre arme en toute sécurité. La non-observation des règles de sécurité risque de causer des dommages corporels graves. Vous êtes le seul responsable de la prévention des accidents.

CONNAISSEZ VOTRE ARME A FOND. Pour sa bonne utilisation, respectez les instructions du livret de sécurité (inclus) et du présent manuel. Des exemplaires supplémentaires gratuits sont disponibles sur demande auprès de votre revendeur Remington.

TRAITEZ SYSTÉMATIQUEMENT UNE ARME COMME SI ELLE ÉTAIT CHARGÉE. Ne vous fiez pas à la sécurité. Utilisez-la conformément au présent manuel. Même avec la sécurité en place, une manipulation sans soins peut causer un tir. La sécurité peut ne pas être en place ; son mécanisme peut avoir été modifié, mis hors service ou être cassé, ou la sécurité peut avoir été dégagée par une manipulation peu soigneuse de l'arme.

RÉGLAGES INTERDITS. Ne jamais changer ou altérer une pièce d'une arme. N'utiliser que des pièces d'origine REMINGTON. Ne jamais apporter une modification au mécanisme de détente, ni à la gâchette, ni au cran d'armé ou aucune autre pièces.

VEILLEZ A VOTRE SÉCURITÉ. Lors des séances de tir, protégez systématiquement vos yeux (à l'aide lunettes de vue, de soleil ou de tir). Protégez également vos oreilles (casque antibruit) pendant les séances de tir. Les expositions répétées au coups de feu cause une réduction des fonctions auditives. Dans les cas rares de rupture d'un étui ou de mauvais fonctionnement de l'arme il y a risque de dommages à l'ouïe ou à la vision. Ne jamais utiliser une arme à feu si vos réactions sont diminuées par l'absorption d'alcool ou de médicaments.

PRENEZ SOIN DE VOTRE ARME A FEU. Veillez à maintenir la propreté du canon. Nettoyez le fusil et faites-le vérifier régulièrement pour veiller à son bon état mécanique. Une pièce usée, endommagée ou manquante présente un danger.

ATTENTION AU CANON

ATTENTION AU CANON. Une arme doit toujours être braquée dans une direction sûre.

PR 0476

REGLES DE SÉCURITÉ

NE JAMAIS EMPLOYER UNE MUNITION IMPROPRE. N'utilisez que des munitions correspondant exactement au calibre (chambrage) de votre arme. Le chargement manuel, effectué mal ou sans précautions, est dangereux. Un chargement manuel mal fait est susceptible de causer une rupture du canon ou de la culasse d'une arme à feu, avec des risques de blessures graves.

CHARGEZ VOTRE ARME DE FAÇON SURE. Ne chargez jamais une arme à feu si vous n'êtes pas à un endroit permettant de tirer sans danger. Gardez la sûreté en position « S » (Sûre) tant que vous n'êtes pas prêt à tirer.

SACHEZ SUR QUOI VOUS TIREZ. Avant d'appuyer sur la détente, assurez-vous que vous voyez clairement votre cible et la trajectoire de la balle ou de la charge de plombs derrière celle-ci. Ne tirez jamais sur de l'eau, des rochers ou une surface dure : les balles risquent de ricocher dessus et de causer des blessures.

CONNAISSEZ LA PORTÉE DE VOTRE ARME A FEU. N'oubliez pas qu'un plomb peut parcourir 500 mètres, et une balle peut parcourir près d'un kilomètre. Une balle de munition à amorçage latéral peut parcourir plus de 2500 m. Une balle de munition à amorçage central peut parcourir 8000 m.

EN CAS DE RATÉ, maintenez votre arme à feu dirigée dans une direction sans danger, puis déchargez-la avec précaution en vous tenant hors de l'axe de la culasse. Si le coup part mais que le recul semble faible, déchargez votre arme et vérifiez que son canon n'est pas obstrué.

DÉCHARGEZ SYSTÉMATIQUEMENT VOTRE ARME A FEU QUAND VOUS NE TIREZ PAS.
Ne portez ni ne rangez jamais une arme à feu chargée dans un véhicule ou un bâtiment. Déchargez votre arme à feu avant de franchir un obstacle risquant de vous faire perdre ne serai-ce que de façon minime le contrôle de votre arme (arbre tombé, clôture, zone glissante, etc).

RANGEZ VOTRE ARME A FEU EN LIEU SUR. Gardez les armes et munitions hors d'atteinte des enfants. Placez les armes à feu déchargées et les munitions sous clef à des endroits différents.

ATTENTION DANGER : Le tir d'une arme à feu dans une enceinte mal aérée, le nettoyage d'une arme à feu ou la manipulation de munitions est susceptible de causer une exposition au plomb. Ce métal est à l'origine de défauts congénitaux, est nuisible à l'appareil reproducteur et cause des maladies graves. Veillez à une bonne aération en permanence. Se laver les mains soigneusement après manipulation.

PR 0477

Pièces importantes de l'arme à feu

Sécurité

La sécurité assure la protection contre les tirs accidentels ou inintentionnels sous utilisation normal, sous réserve qu'elle soit bien armée et en bon état.

Pour armer la sécurité, la mettre sur la position « S » (Sûre). Voir la figure 3.

Toujours mettre la sécurité sur la position « S » avant de manipuler, de charger ou de décharger l'arme.

Quand vous êtes prêts à tirer, mettez la sécurité sur la position « F » (Tir) pour la désarmer. Voir la figure 4.

Ne pas toucher à la queue de détente lors d'une manoeuvre de la sécurité.

Ne jamais actionner la queue de détente quand sécurité est en position « S ».

ATTENTION DANGER : L'arme à feu tire quand on tire la queue de détente avec la sécurité en position « F ».

Même si la sécurité est sur la position «S» une manipulation brutale de l'arme peut en déclencher le tir. Voir les Règles de sécurité page 2.

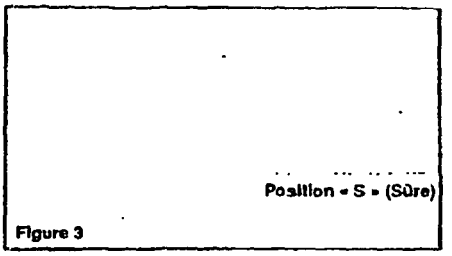

Figure 3

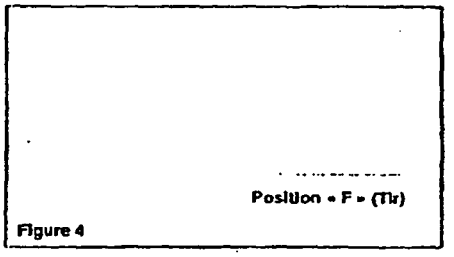

Figure 4

CULASSE

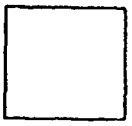

La culasse sert à verrouiller la cartouche dans la chambre.

MONTAGE DE LA CULASSE :

1. Diriger l'arme à feu dans une direction sans danger.
2. Mettez la sécurité sur la position « S ».
3. Aligner les pattes de la culasse avec la boîte de culasse. Voir la figure 5.
4. Enfoncer la culasse à fond dans la boîte de culasse.
5. Pour fermer la culasse, appuyer vers le bas sur son levier. 5.

DÉMONTAGE DE LA CULASSE :

1. Diriger l'arme à feu dans une direction sans danger.
2. Mettre la sécurité sur la position « S ».
3. Ne pas toucher la queue de détente pendant le déplacement de la sécurité.
4. Lever le levier de culasse.
5. Tirer le levier de culasse à fond vers l'arrière.
6. Appuyer sur le bouton de blocage de la culasse. Voir la figure 5.
7. Tout en appuyant sur le bouton de blocage, extraire la culasse de l'arme à feu.

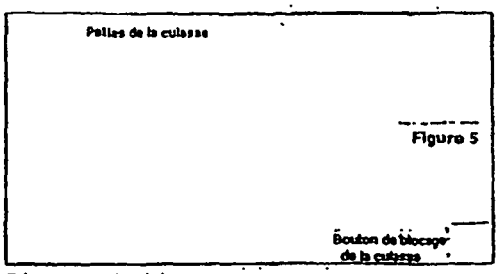

Figure 5

Détente et mise à feu :

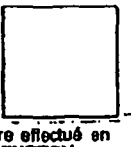

Le fait d'appuyer sur la queue de détente déclenche le tir.

Le mécanisme de la queue de détente est réglé en usine.

Tout réglage éventuel doit obligatoirement être effectué en usine ou par un ARMURIER AGRÉÉ PAR REMINGTON.

ATTENTION DANGER : NE JAMAIS déposer le mécanisme de détente, ni ne modifier la queue de détente ou son mécanisme.

ATTENTION DANGER : NE JAMAIS toucher la queue de détente sauf au moment précis du tir.

CANON

L'intérieur du canon doit obligatoirement être propre et exempt d'obstructions.

I. POUR VÉRIFIER L'ÉTAT DE L'INTÉRIEUR DU CANON

1. Diriger l'arme à feu dans une direction sans danger.
2. Mettez la sécurité sur la position « S ».
3. Lever le levier d'armement.
4. Tirer le levier d'armement à fond en arrière.
5. Enlever toute munition se trouvant dans la chambre ou dans le chargeur. Voir la page 8.
6. Enlever la culasse. Voir la page 5.
7. Regarder dans le canon depuis la chambre et vers la bouche. Voir la page 1.

II. COMMENT EXTRAIRE UN OBJET SE TROUVANT A L'INTÉRIEUR DU CANON

1. Prendre une baguette de la taille appropriée.
2. Pousser la baguette à l'intérieur du canon à partir de la chambre jusqu'à ce qu'elle ressorte par la bouche.
3. Si un objet s'avère difficile à extraire du canon en le poussant à l'aide d'une baguette, retourner l'arme en usine ou à un ARMURIER AGRÉÉ PAR REMINGTON.

ATTENTION DANGER : NE JAMAIS essayer d'extraire un objet du canon en chargeant une cartouche dans l'arme et en faisant feu. Il y aurait danger d'explosion du canon ou de la cartouche, et risque de blessures graves.

III. POUR NETTOYER LE CANON, RESPECTER LES INSTRUCTIONS DE LA PAGE 10

Avant de charger l'arme à feu, assurez-vous que l'intérieur du canon est exempt d'impuretés et autres obstructions.

REMARQUE SPÉCIALE
INSTRUCTIONS DE CHARGEMENT DES CARTOUCHES 220 SWIFT

A la différence des autres cartouches chambrées dans la carabine Modèle 700, la .220 SWIFT est une cartouche à demi-bourrelet. De ce fait, pour assurer une bonne alimentation, veillez à ce que le bourrelet de la cartouche supérieure soit toujours en avant de celui de la cartouche inférieure.

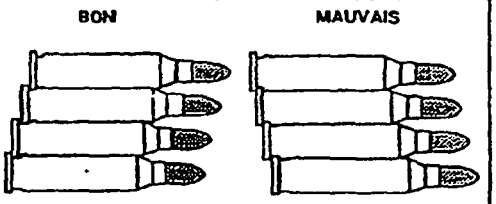

PR 0480

COMMENT CHARGER L'ARME À FEU

Il existe trois types de carabines Modèle 700 : L'une avec une PORTIERE DE MAGASIN, une autre sans PORTIERE DE MAGASIN et une autre munie d'un CHARGEUR AMOVIBLE.

I. POUR CHARGER UNE SEULE CARTOUCHE :

1. Diriger l'arme à feu dans une direction sans danger.
2. Mettez la sécurité sur la position « S ».
3. Lever le levier de culasse.
4. Tirer le levier de culasse à fond vers l'arrière.
5. Introduire une cartouche du bon calibre sur le plateau de chargeur ou dans la chambre. Voir la figure 6.
6. Repousser le levier d'armement vers l'avant, puis l'appuyer vers le bas pour verrouiller la cartouche dans la chambre.

L'ARME A FEU EST DÉSORMAIS CHARGÉE

7. Pour pouvoir tirer, mettre la sécurité sur la position « F ».

L'ARME A FEU EST DÉSORMAIS PRETE A TIRER

II. COMMENT CHARGER LA CHAMBRE ET LE MAGASIN :

1. Diriger l'arme à feu dans une direction sans danger.
2. Mettez la sécurité sur la position « S ».
3. Lever le levier de culasse.
4. Tirer le levier de culasse à fond vers l'arrière.
5. Introduire 4 cartouches du bon calibre (une à la fois) dans la magasin. Si l'arme à feu est un magnum, on ne peut introduire que 3 cartouches. Si l'arme à feu est de calibre 17, 222 ou 223 le magasin peut recevoir 5 cartouches. Maintenez les cartouches dirigées vers la chambre. Voir la figure 6.
6. Mettre une cartouche dans la chambre.
7. Avec vos doigts, appuyez sur les cartouches pour les enfoncer à fond dans la magasin. Repousser la culasse lentement vers l'avant, de façon qu'elle passe au-dessus des cartouches du magasin.
8. Appuyer le levier d'armement vers le bas.

LA CHAMBRE ET LE MAGASIN SONT COMPLETEMENT CHARGÉS

9. Pour pouvoir tirer, mettre la sécurité sur la position « F ».

L'ARME A FEU EST DÉSORMAIS PRETE A TIRER

ATTENTION DANGER : TOUJOURS vérifier que le calibre des cartouches est correct avant de charger l'arme.

Introduire les cartouches comme indiqué.

Figure 6

Autre méthode de chargement de la chambre et du magasin : (pour les carabines Modèle 700 équipées d'un chargeur amovible)

1. Diriger l'arme à feu dans une direction sans danger.
2. Mettez la sécurité sur la position « S ».
3. Lever le levier de culasse.
4. Tirer le levier de culasse à fond vers l'arrière.
5. Appuyer simultanément (vers l'intérieur) sur les deux loquets du chargeur et extraire ce dernier de l'arme. Voir la figure 7.
6. Introduire 4 cartouches du bon calibre (une à la fois) dans le chargeur, vers l'arrière de ce dernier. Si l'arme est un magnum, on ne peut introduire que 3 cartouches. Maintenez les cartouches dirigées vers la chambre. Voir la figure 7.
7. Introduire le chargeur dans l'ouverture du pontet et enfoncez-le jusqu'à ce que les deux loquets soient complètement encliquetés.

LE MAGASIN EST COMPLETEMENT CHARGÉ

8. Mettez une cartouche du bon calibre dans la chambre. Voir la figure 6.
9. Avec vos doigts, appuyez sur les cartouches pour les enfoncer à fond dans la magasin. Repousser la culasse lentement vers l'avant, de façon qu'elle passe au-dessus des cartouches du magasin.
10. Appuyer le levier d'armement vers le bas pour verrouiller la cartouche dans la chambre.

LA CHAMBRE ET LE MAGASIN SONT COMPLETEMENT CHARGÉS

11. Pour pouvoir tirer, mettre la sécurité sur la position « F ».

L'ARME A FEU EST PRETE A TIRER

ATTENTION DANGER : TOUJOURS vérifier que le calibre des cartouches est correct avant de charger l'arme.

Figure 7

Appuyer (vers l'intérieur) sur les deux loquets du chargeur

COMMENT DÉCHARGER L'ARME

Il existe trois types de carabines Modèle 700 : L'une avec une PORTIERE DE MAGASIN, une autre sans PORTIERE DE MAGASIN et une autre munie d'un CHARGEUR AMOVIBLE.

INSTRUCTIONS POUR LES MODELES MUNIS D'UNE PORTIERE DE MAGASIN :

1. Diriger l'arme à feu dans une direction sans danger.
2. Mettez la sécurité sur la position « S ».
3. Lever le levier de culasse.
4. Mettre une main au-dessus de la fenêtre d'éjection.
5. Tirer lentement le levier d'armement vers l'arrière à l'aide de l'autre main pour pouvoir extraire la cartouche de la chambre.
6. Saisissez la cartouche et extrayez-la de l'arme.
7. Mettez une main sous la portière de magasin.

PR 0482

8. Appuyez sur le verrou de portière pour ouvrir celle-ci. Voir la figure 8. Le ressort d'apport et le plateau de chargeur vont tomber du magasin.

Verrou de portière
Plateau de chargeur
Ressort d'apport
Portière du magasin

Figure 8

9. Enlever les cartouches relâchées.
10. Appuyer sur le transporteur de chargeur puis fermer la plaque d'appui.

ATTENTION DANGER : Vérifiez qu'il ne reste de cartouche ni dans la chambre ni dans le magasin.

INSTRUCTIONS POUR LES MODELES NON MUNIS D'UNE PORTIERE DE MAGASIN :

1. Exécuter les étapes 1 à 6 ci-dessus.
2. Maintenez la bouche dirigée dans une direction sans danger. Appuyez lentement sur le levier d'armement pour faire sortir une cartouche du magasin. ATTENTION : Si le levier est trop poussé, la cartouche risque de s'enfoncer dans la chambre. Voir le Nota ci-dessous.
3. Tirer à fond sur le levier d'armement et extraire la cartouche de la fenêtre d'éjection.
4. Répéter les étapes 2 et 3 jusqu'à ce que le magasin soit complètement vidé.

ATTENTION DANGER : Vérifiez qu'il ne reste de cartouche ni dans la chambre ni dans le magasin.

NOTA : Si la culasse est poussée à fond vers l'avant, l'arme peut tirer. Normalement, le fait d'actionner la culasse vers l'arrière fait sortir les cartouches de la chambre. Toutefois, si la cartouche reste dans la chambre, diriger l'arme dans une direction sans danger, actionner la culasse à fond vers l'avant et abaisser le levier pour la culasse. Ensuite, répéter les étapes 1 à 4 ci-dessus.

INSTRUCTIONS POUR LES MODELES MUNIS D'UN CHARGEUR AMOVIBLE :

1. Diriger l'arme à feu dans une direction sans danger.
2. Mettez la sécurité sur la position « S ».
3. Lever le levier de culasse.
4. Mettre une main au-dessus de la fenêtre d'éjection.
5. Tirer lentement le levier d'armement vers l'arrière à l'aide de l'autre main pour pouvoir extraire la cartouche de la chambre.
6. Appuyer simultanément (vers l'intérieur) sur les deux loquets du chargeur et extraire ce dernier de l'arme. Voir la figure 7.
7. Extraire les cartouches du chargeur.
8. Remettre le chargeur en place.

ATTENTION DANGER : Vérifiez qu'il ne reste de cartouche ni dans la chambre ni dans le chargeur.

PR 0483

COMMENT RÉGLER LE DISPOSITIF DE VISÉE

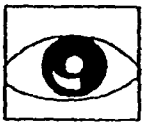

Tous les modèles munis d'une hausse et d'un guidon sont réglés en usine pour toucher une cible à 90 m.

RÉGLAGE DE LA HAUSSE :

Déplacer la hausse dans le sens désiré pour mettre la balle dans la cible.

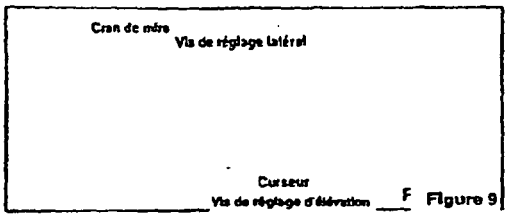

Figure 9

NOTA : On trouvera des éléments de balistique et de trajectoires dans le catalogue REMINGTON.

LUNETTE DE VISÉE

Le dessus de la boîte de culasse est muni de trous prévus pour la pose d'une lunette de visée.

POSITION SUR LA CIBLE	RÉGLAGES
Les balles touchent au-dessus du centre	a. Desserrer la vis de réglage de hausse b. Déplacer la hausse vers l'arrière c. Resserrer la vis de réglage de hausse
Les balles touchent au-dessous du centre	a. Desserrer la vis de réglage de hausse b. Déplacer la hausse vers l'avant c. Resserrer la vis de réglage de hausse
Les balles touchent à gauche du centre	a. Desserrer la vis de réglage latéral b. Déplacer le cran de mire vers la droite c. Resserrer la vis de réglage latéral
Les balles touchent à droite du centre	a. Desserrer la vis de réglage latéral b. Déplacer le cran de mire vers la gauche c. Resserrer la vis de réglage latéral

GRAISSAGE ET ENTRETIEN

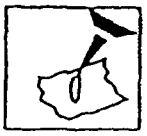

GRAISSAGE : Il importe de systématiquement éviter de trop graisser la carabine. Une fine pellicule d'huile Rem™ aide à éviter la rouille. Voir le NOTA ci-dessous.

Avant de ranger votre arme, il est important de la nettoyer et de la graisser avec soin. On appliquera ensuite de temps à autre une fine couche d'huile Rem™ sur les surfaces extérieures.

Avant de réutiliser votre arme, on devra obligatoirement éliminer toute huile se trouvant sur les parois de la chambre et de l'âme du canon, qui devront être parfaitement secs.

NOTA : Vous trouverez chez votre armurier l'huile spéciale Rem™ contenant du Téflon® spécial. S'il n'en dispose pas, demandez-lui de passer commande d'huile Rem™ auprès de son fournisseur.

COMMENT NETTOYER LE CANON

ATTENTION DANGER : Vérifiez qu'il ne reste de cartouche ni dans la chambre ni dans le chargeur.

1. Employez les outils d'un nécessaire de nettoyage de bonne qualité. Pour toutes recommandations, demandez conseil auprès de votre distributeur Remington.
2. Déposez la culasse. Voir les instructions page 5.
3. Choisissez un écouvillon de taille convenable et fixez-le à la baguette de nettoyage.
4. Trempez l'écouvillon dans le solvant de nettoyage.

NOTA : Pendant le nettoyage, le canon devra être en position horizontale, la lenêtre d'éjection vers le dessous. Le canon doit obligatoirement être nettoyé à partir de la chambre vers la bouche.

5. Enfoncez plusieurs fois la baguette dans le canon.
6. Détachez l'écouvillon de la baguette, fixez à celle-ci l'embout muni d'un coussinet et enfoncez celui-ci dans la canon.
7. Répéter l'opération plusieurs fois, en changeant le coussinet à chaque fois jusqu'à ce qu'il ressorte propre.
8. Faites passer dans toute la longueur du canon un coussinet imbibé d'huile Rem™.
9. Faites passer dans le canon un coussinet propre pour éliminer l'huile en excès.
10. A l'aide d'un chiffon doux propre, appliquez une fine couche d'huile Rem™ sur l'extérieur du canon.
11. Après le canon, nettoyez la boîte de culasse et le mécanisme de détente.

ATTENTION DANGER : une arme à feu doit être contrôlée régulièrement par un armurier agréé par Remington, afin de s'assurer de son bon état et du remplacement de toute pièce usée ou en mauvais état.

PR 0485

COMMENT NETTOYER LA BOITE DE CULASSE ET LE MÉCANISME DE DÉTENTE

1. Mettez la sécurité sur la position «S»
2. Éposez la culasse. Voir les instructions page 5.
3. Mettez la carabine la crosse en l'air.
4. Enlevez les vis du pontet. Voir la figure 10.

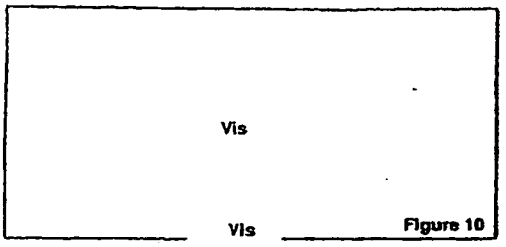

Figure 10

5. Extraire la crosse de l'ensemble culasse/détente.

UNIQUEMENT POUR LES MODELES NON MUNIS D'UNE PORTIERE DE MAGASIN :

Déposez le ressort d'apport et le plateau de chargeur de la culasse.

NOTA : On nettoiera l'ensemble culasse/détente assemblé à l'aide d'huile Rem™.

6. Spray the receiver and the four points of the trigger

6. Pulvérisez de l'huile Rem™ sur la culasse et les 4 points du mécanisme de détente. Voir la figure 11. Laissez l'huile agir pendant 15 minutes. Pulvérisez de nouveau pour nettoyer les pièces. Secouez l'ensemble pour éliminer l'huile en excès.

nents. Shake off excess lubricant.

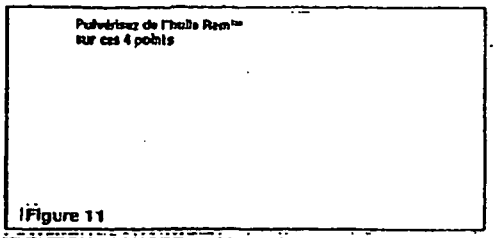

Figure 11

ATTENTION DANGER : L'emploi excessif d'une huile non préconisée est susceptible d'entraîner de graves incidents de fonctionnement, et en particulier des tirs accidentels.

REMONTAGE DES MODELES NON MUNIS D'UNE PORTIERE DE MAGASIN :

1. Remettez le plateau de chargeur et le ressort d'apport dans le magasin.
2. Remettez la crosse sur l'ensemble culasse/détente.
3. Remettez les vis du pontet et serrez-les.

ATTENTION DANGER : Avant de remonter la culasse, assurez-vous que le canon est exempt d'obstructions.

PR 0486

4. Remontez la culasse. Voir les instructions page 5.

COMMENT REMONTER LES MODELES MUNIS D'UNE PORTIERE DE MAGASIN :

Enfoncez le chargeur à fond dans la culasse.

MODELES MUNIS D'UNE PORTIERE DE MAGASIN OU D'UN CHARGEUR AMOVIBLE :

1. Montez le pontet sur la crosse.
2. Remettez la crosse sur l'ensemble culasse/détente.
3. Remettez les vis du pontet et serrez-les.
4. Fermez la portière de magasin ou remontez le chargeur.

ATTENTION DANGER : Avant de remonter la culasse, assurez-vous que le canon est exempt d'obstructions.

5. Remontez la culasse. Voir les instructions page 5.

ATTENTION DANGER : Après le nettoyage du mécanisme de détente, vérifiez l'absence de cartouches dans la chambre et dans le magasin. Mettez la sécurité sur « F ». Fermez la culasse énergiquement. Le percuteur doit obligatoirement rester armé. Pour le vérifier, appuyez sur la queue de détente. Le percuteur doit avancer. Répéter ce test un minimum de 10 fois. Si le percuteur ne reste pas en position armée après avoir fermé la culasse énergiquement, faites réviser l'arme par un ARMURIER AGRÉÉ PAR REMINGTON.

FRÉQUENCE DES NETTOYAGES

1. Avant et après tout rangement prolongé.
2. Chaque fois que la carabine aura été soumise à des conditions difficiles (tir sous la pluie, la neige, en bord de mer, etc.).
3. Chaque fois que la carabine aura été exposée à de la saleté (chute dans la boue, posée par terre à l'extérieur, etc.).

NOTA : Bien que l'huile Model 700 *Stainless Synthetic Rifle* soit étudié et produite pour assurer une meilleure résistance à la corrosion, seul un entretien soigneux assurera le bon état et le bon aspect de votre arme. Après un emploi intensif, il se peut toutefois que l'usure du revêtement protecteur de certaines pièces soit insuffisant pour résister à la corrosion. Il sera alors nécessaire de remplacer les pièces concernées pour rétablir l'intégrité de la résistance à la corrosion.

ATTENTION DANGER : Après chaque utilisation de l'arme, appliquez les instructions de graissage et d'entretien du présent livret. Si l'arme a été submergée, elle doit obligatoirement être nettoyée et graissée soigneusement le plus tôt possible. Si elle est tombée dans de l'eau de mer, en rincer soigneusement toutes les pièces à l'eau douce, avant de les sécher, puis de nettoyer et de graisser l'arme. Si l'arme ne fonctionne pas bien, faites la réparer par un armurier compétent avant tout emploi. A défaut, il y aurait risque de mauvais fonctionnement, susceptible d'entraîner des blessures.

COMMENT NETTOYER LA CULASSE

COMMENT DÉMONTER LA CULASSE :

1. Déposez la culasse de la carabine. Voir les instructions page 5.
2. Appuyez l'épaulement du percuteur sur un bord métallique, puis tirez sur la culasse pour la séparer du percuteur. Mettez une pièce de monnaie dans la fente située près du bord arrière du percuteur. Voir la figure 12.
3. Tout en maintenant la culasse, faites tourner le culot de culasse en sens inverse des aiguilles d'une montre jusqu'à pouvoir extraire le percuteur équipé.

ATTENTION : Le percuteur équipé devra obligatoirement être nettoyé comme une seule pièce, sans démontage.

4. Nettoyez toutes les pièces avec du solvant de nettoyage, puis séchez-les à l'aide d'un chiffon propre.
5. Appliquez une fine couche d'huile Rem™.

MONTAGE :

1. Remettez le percuteur équipé dans l'arrière de la culasse.
2. Serrer le culot de culasse à la main dans la culasse.
3. Levez la pièce de monnaie de la fente arrière du percuteur.
4. Faites tourner le culot de culasse jusqu'à ce que la tête du percuteur entre dans la petite ouverture de l'épaulement arrière de la culasse. La culasse est maintenant armée. Voir la figure 13.

NOTA : La culasse doit obligatoirement être armée pour pouvoir être remise en place.

5. Remettez la culasse dans la carabine. Voir les instructions page 5.

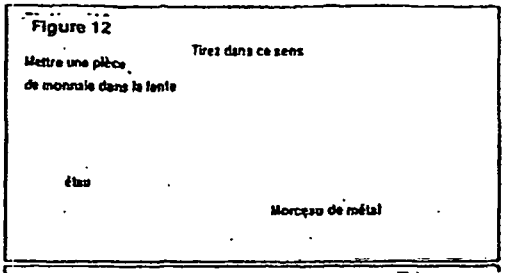

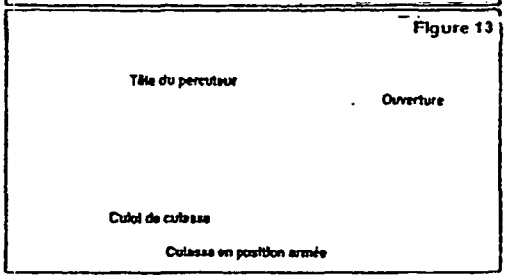

PR 0488

COMMENT PASSER COMMANDE DE PIÈCES DE RECHANGE ET FAIRE EFFECTUER DES RÉPARATIONS

COMMANDE DE PIÈCES DE RECHANGE ET FAIRE EFFECTUER DES RÉPARATIONS

Vous pouvez vous procurer les pièces de rechange figurant à la liste de pièces détachées auprès d'un revendeur agréé Remington dont une liste est incluse avec votre carabine.

Si la liste des revendeurs agréés manque, faites une demande du document intitulé «*Remington Authorized Gunsmiths*» à l'adresse suivante :

Customer Service Division
Remington Arms Company, Inc.
Ilion, New York 13357-1888
United States of America

ou par télécopie au (USA) 315-895-3659

Toute correspondance adressée à un revendeur agréé Remington doit obligatoirement comporter le modèle et le numéro de série de votre carabine, son calibre ainsi que le nom de la pièce désirée telle qu'elle apparaît à la liste de pièces de rechange ci-dessous. Votre revendeur agréé Remington pourra vous faire part de leur prix, des frais de réparation (main d'oeuvre), ainsi que des frais d'expédition, d'assurance et taxes applicables.

Entretien :

Pour toute intervention d'entretien sur votre carabine Remington, adressez-vous à un revendeur agréé Remington (voir la liste). Pour votre sécurité et celle d'autrui, ne faites effectuer l'entretien de votre carabine que chez un revendeur agréé Remington.

Tout envoi de votre carabine devra comporter son modèle, numéro de série et calibre, ainsi qu'une description du problème. N'oubliez pas de mentionner vos nom et adresse, code postal et numéro de téléphone et de télécopie le cas échéant.

Joignez les renseignements ci-dessus dans une enveloppe à l'intérieur de l'emballage d'expédition qui devra être conforme aux instructions de votre revendeur agréé Remington.

Pour votre sécurité et celle d'autrui, veillez à bien décharger votre carabine et NE METTEZ JAMAIS de munitions dans un envoi.

MODELE 700

Carabine à culasse mobile à percussion centrale

PIECES DE RECHANGE - SERVICE APRES-VENTE

Liste de pièces de rechanges de la carabine Modèle 700

Pièces soumises à modification sans préavis
FOB Ilion (État de New York, États-Unis).

Repère	Nom de la pièce	Repère	Nom de la pièce
	NOTA : La liste ci-dessous s'applique à la carabine Calibre 30-06 de base. Consulter l'éclaté pour la bonne dénomination des pièces.	29	Vis d'anneau grenadière avant
			Capuchon, qualité BDL (non représenté)
			Entretoise de capuchon (non représenté)
1	Canon équipé		
2	Culasse équipée	30	Magasin (qualité ADL)
3	Cuivi de culasse	30a	Magasin équipé (BDL)
4	Butée de culasse (non disponible en rechange)		(chargeur amovible non représenté)
5	Axe de butée de culasse (non disponible en rechange)		Magasin (qualité BDL) (non représenté)
6	Ressort de butée de culasse (non disponible en rechange)	31	Plateau de chargeur, ADL
7	Cadre de plaque de couche (nouveau style non représenté)		Plateau de chargeur, BDL
	Plaque de couche (nouveau style non représenté)		Vis de magasin (qualité ADL)
8	Entretoise de Plaque de couche (qualité BDL)	32	Ressort d'appui (qualité ADL)
9	Vis de plaque de couche		Ressort d'appui (qualité BDL)
10	Vis centrale de pontet (qualité ADL)	33	Ressort du percuteur
11	Éjecteur	34	Vis arrière du pontet
12	Axe d'éjecteur	35	Cran de mire
13	Ressort d'éjecteur		Hausse équipée
14	Extracteur		Embase de hausse
16	Percuteur équipé	37	Vis de fixation d'embase de hausse (2)
17	Goupille transversale de percuteur	38	Curseur
18	Verrou de portière de magasin (qualité BDL)	39	Vis de réglage de hausse
19	Axe de verrou de portière de magasin (qualité BDL)	40	Axe arrière
20	Ressort de verrou de portière de magasin (qualité BDL)	41	Vis de boîte de culasse
21	Axe de portière de magasin (qualité BDL)	42	Goupille de gâchette (non disponible en rechange)
22	Vis avant du pontet (BDL)	44	Crosse équipée (qualité ADL)
23	Bague de vis avant du pontet (qualité ADL)		Crosse équipée (qualité BDL)
24	Guidon	46	Mécanisme de détente (non disponible en rechange)
	Guidon (bas)	47	Pontet (qualité ADL)
25	Embase de guidon (BDL)	48	Pontet équipé (qualité BDL)
26	Vis d'embase de guidon		Pontet (chargeur amovible non représenté)
27	Couvre-guidon	49	Vis de réglage latéral

PR 0491

IMPORTANTE

LEA ESTE FOLLETO ANTES DE UTILIZAR EL ARMA DE FUEGO

FOLLETO DE INSTRUCCIONES
Rifle de cerrojo de percusión central
Modelo 700

PR 0492

RIFLE DE PERCUSION CENTRAL MODELO 700

¡Felicidades por su elección de un Remington!
Con el cuidado adecuado, este rifle le proporcionará muchos años de uso confiable y placentero.

Se recomienda utilizar *municiones* Remington a fin de obtener resultados óptimos - en las pruebas de fábrica del rifle se utiliza este tipo de munición a fin conformarse con las normas más exigentes de funcionamiento y desempeño.

Ilustración 1

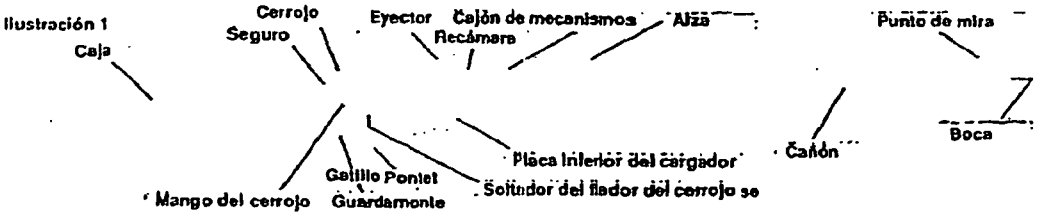

Esta ilustración muestra las principales piezas del RIFLE DE CERROJO REMINGTON MODELO 700.
La ilustración facilitará la comprensión de las instrucciones en este manual.

Ilustración 2
Munición

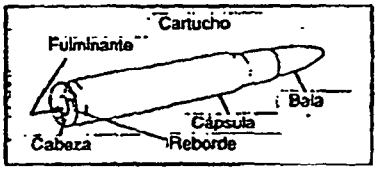

Esta ilustración muestra las partes de la munición.

PR 0493

REGLAS DE SEGURIDAD

ADVERTENCIA

LEA ESTAS REGLAS DE SEGURIDAD BASICA. Aprenda a manejar el arma de manera segura. Emplear el arma sin haber leído, comprendido ni obedecido estas reglas de seguridad conlleva riesgos de graves lesiones corporales. Sólo usted puede evitar los accidentes.

CONOZCA SU ARMA. Para utilizar el arma correcta y seguramente, lea y obedezca las instrucciones en el folleto adjunto de seguridad en el uso de armas de fuego y en este manual de instrucciones. Pueden obtenerse ejemplares gratis solicitándolos a Remington Arms Company, Inc.

TRATE TODA ARMA DE FUEGO COMO SI ESTUVIESE CARGADA. No dependa del seguro. Opérela de la manera indicada en este manual. Incluso con el seguro engranado, el arma puede dispararse si se maneja sin cuidado. Es posible que el seguro no esté bien engranado; que su mecanismo interno esté alterado, desactivado o averiado; o que el seguro se haya desengranado al manejar el arma sin cuidado.

NUNCA REALICE AJUSTES. Nunca cambie ni modifique ninguna pieza de un arma de fuego. Utilice sólo piezas REMINGTON. Nunca efectúe ajustes en el gatillo ni cambie la forma ni el tamaño del fiador, muesca del fiador u otras piezas.

PROTEJASE A SI MISMO. Al disparar proteja sus ojos con lentes, lentes de tiro o gafas de sol. Al disparar al blanco o tirolear, proteja sus oídos con tapones o tapaorejas. El oído puede sufrir daños permanentes con la exposición repetida a las detonaciones de los disparos. En el inusual caso que la caja se rompiera o fallara el arma, puede sufrirse daños al oído o la vista. Nunca dispare luego de beber bebidas alcohólicas o tomar medicamentos.

CUIDE SU ARMA DE FUEGO. Mantenga el cañón limpio y sin obstrucciones. Limpie y haga revisar el arma periódicamente para asegurar que sus mecanismos funcionan correctamente. Es peligroso utilizar el arma con piezas desgastadas, dañadas o faltantes.

VIGILE LA BOCA DEL CAÑON. Siempre mantenga el arma apuntada en una dirección que no represente peligro.

REGLAS DE SEGURIDAD

NUNCA UTILICE LA MUNICION INDEBIDA. Utilice únicamente municiones del calibre exacto o que correspondan a las marcas de calibre o diámetro del arma. Es peligroso cargar manualmente los cartuchos de manera descuidada o incorrecta. Cartuchos mal cargados pueden hacer explotar el cañón o la recámara de cualquier arma de fuego de mano, resultando en graves lesiones corporales.

CARGUE EL ARMA SIN PELIGRO. Nunca cargue un arma de fuego hasta encontrarse en un lugar donde pueda disparar sin peligro y esté listo para disparar.

CONOZCA SU BLANCO. Antes de tirar del gatillo asegúrese que puede ver claramente tanto el blanco como la trayectoria de la bala, plomo o perdigón más allá del blanco. Nunca dispare contra agua, piedras ni superficies dura. Las balas podrían rebotar y causar heridas.

CONOZCA EL ALCANCE DE SU ARMA. Los perdigones de escopeta pueden viajar hasta 460 metros y los plomos pueden tener un alcance de 800 metros. Las balas de percusión anular llegan a más de 2 1/2 kilómetros. Las balas de percusión central alcanzan hasta 8 kilómetros.

SI EL ARMA NO DISPARA, apúntela en una dirección sin peligro y descárguela con cuidado para no exponerse a la recámara. Si el arma dispara pero la detonación o el retroceso pareciera débil, descárguela y compruebe que el cañón no se encuentre obstruido.

DESCARGUE EL ARMA CUANDO NO ESTÉ DISPARANDO. Nunca lleve ni guarde un arma cargada en un edificio o vehículo. Descargue el arma antes de cruzar, subir o bajar cualquier obstáculo que pueda impedir el control total del arma, como árboles caídos, cercas, troncos de árboles o zonas resbalosas.

GUARDE EL ARMA EN UN LUGAR SEGURO. Mantenga las armas de fuego y municiones fuera del alcance de los niños. Guarde las armas descargadas y las municiones bajo llave y en lugares separados.

ADVERTENCIA. Tanto la descarga de armas de fuego como su limpieza y el manejo de municiones en lugares mal ventilados, implica un riesgo de exposición al plomo, el cual es una substancia que causa defectos de nacimiento, daños reproductivos y otras lesiones corporales graves. Mantenga siempre una buena ventilación. Lávese bien las manos luego de estas actividades.

PIEZAS IMPORTANTES DEL ARMA

EL SEGURO

En condiciones normales de empleo y cuando se encuentra correctamente engranado y en buen estado de funcionamiento, el seguro protege contra la descarga accidental o involuntaria del arma.

Para engranar el seguro, colóquelo en la posición «S». Ver la Figura 3.

Durante el manejo, carga y descarga del arma, mantenga siempre el seguro en la posición «S».

Cuando esté listo para disparar, coloque el seguro en la posición «F» para desengranarlo. Vea la Figura 4.

No toque el gatillo mientras mueve el seguro.

Nunca tire del gatillo cuando el seguro se encuentra en la posición «S».

ADVERTENCIA: El arma disparará si se tira del gatillo mientras el seguro está en la posición «F».

Incluso con el seguro en la posición «S», el arma puede dispararse si se maneja sin cuidado. Por favor lea las Reglas de Seguridad en la página 2.

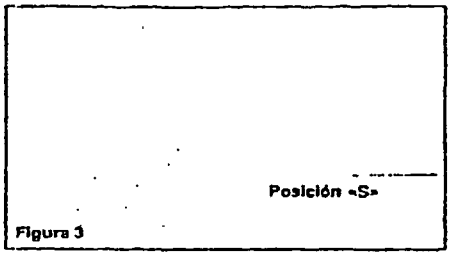

Figura 3

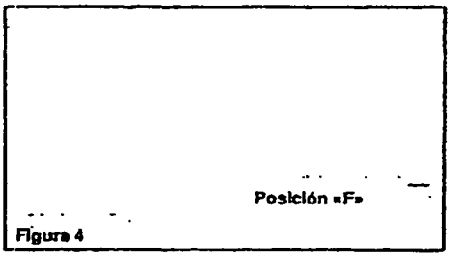

Figura 4

EL CERROJO

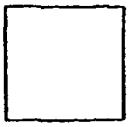

El cerrojo fija el cartucho en la recámara.

INSTALACION DEL CERROJO

1. Apunte el arma en una dirección sin peligro.
2. Coloque el seguro en la posición «S».
3. Alinee los tetones del cerrojo con el cajón de mecanismos. Vea la Figura 5.
4. Deslice el cerrojo dentro del cajón de mecanismos empujando hasta el fondo.
5. Para cerrar el cerrojo empuje el mango del cerrojo hacia abajo.

PARA DESARMAR EL CERROJO:

1. Apunte el arma en una dirección sin peligro
2. Ponga el seguro en la posición «S».
3. Mantenga su dedo alejado del gatillo mientras mueve el seguro.
4. Levante el mango del cerrojo
5. Tire del mango del cerrojo totalmente hacia atrás. Vea la Figura 5.
6. Oprima el soltador del fiador del cerrojo. Vea la Figura 5.
7. Mientras empuja el soltador del fiador del cerrojo, retire el cerrojo del arma.

Figura 5

EL GATILLO:

El arma se dispara al apretar el gatillo.

El gatillo viene regulado de fábrica.

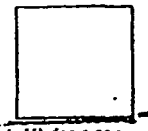

Cualquier ajuste del gatillo debe efectuarse en la fábrica o con un ARMERO RECOMENDADO POR REMINGTON.

ADVERTENCIA: NUNCA desarme el mecanismo del gatillo ni haga ajustes al gatillo ni al mecanismo del gatillo.

ADVERTENCIA: NUNCA coloque su dedo en el gatillo si no tiene intención de disparar el arma.

PR 0497

EL CAÑON

El interior del cañón debe estar siempre limpio y libre de obstrucciones.

I. INSPECCION DEL INTERIOR DEL CAÑON

1. Apunte el arma en una dirección sin peligro.
2. Coloque el seguro en la posición «S».
3. Levante el mango del cerrojo.
4. Corra el cerrojo completamente hacia atrás.
5. Retire la munición de la recámara y el cargador. Vea la página 8.
6. Retire el cerrojo. Vea la página 5.
7. Mire por el interior del cañón desde la recámara hasta la boca. Vea la Figura 1.

II. EXTRACCION DE OBJETOS DEL INTERIOR DEL CAÑON:

1. Emplee la baqueta del tamaño correcto.
2. Introduzca la baqueta desde el extremo de la recámara pasándola por todo el cañón hasta que salga por la boca.
3. Si no se puede sacar fácilmente un objeto del cañón con la baqueta, envíe el arma a la fábrica o donde un ARMERO RECOMENDADO POR REMINGTON.

ADVERTENCIA: NUNCA trate de sacar un objeto del cañón cargando otro cartucho y disparando. Esto puede causar graves lesiones corporales al explotar el cañón o romperse el casquillo de un cartucho.

III. PARA LIMPIAR EL CAÑON SIGA LAS INSTRUCCIONES EN LA PAGINA 10.

Antes de cargar el arma compruebe que el interior del cañón se encuentre libre de suciedad u otras obstrucciones.

AVISO ESPECIAL
INSTRUCCIONES DE CARGA DEL CARTUCHO SWIFT .220 EN EL MODELO 700

A diferencia de otro tipo de cartuchos aceptados en la recámara del Modelo 700, el cartucho SWIFT .220 es un cartucho semirebordeado. En consecuencia, para asegurar una alimentación correcta, compruebe que el reborde del cartucho superior se encuentre por delante del reborde del cartucho más abajo.

CORRECTO INCORRECTO

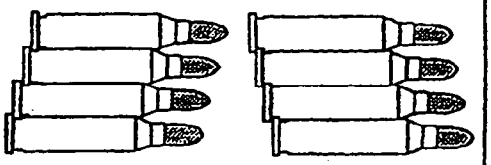

PR 0498

CARGA DEL ARMA

Existen tres tipos de rifles Modelo 700: uno con PLACA INFERIOR de cargador, otro sin PLACA INFERIOR y otro con CAJA DE CARGADOR DESMONTABLE.

I. CARGA DE UN SOLO CARTUCHO:

1. Apunte el arma en una dirección sin peligro.
2. Coloque el seguro en la posición «S».
3. Levante el mango del cerrojo.
4. Tire completamente hacia atrás el mango del cerrojo.
5. Coloque un cartucho del calibre correctó en el seguidor del cargador o en la recámara. Vea la Figura 6.
6. Corra el mango del cerrojo hacia adelante y empújelo luego hacia abajo para fijar el cartucho en la recámara.

EL ARMA SE ENCUENTRA AHORA CARGADA.

7. Para disparar el arma coloque el seguro en la posición «F».

EL ARMA ESTA LISTA PARA SER DISPARADA.

II. CARGA DE LA RECAMARA Y DEL CARGADOR:

1. Apunte el arma en una dirección sin peligro.
2. Coloque el seguro en la posición «S».
3. Levante el mango del cerrojo.
4. Tire completamente hacia atrás el mango del cerrojo.
5. Introduzca en el cargador cuatro cartuchos del calibre correcto, uno a la vez. Si el cargador es magnum, sólo podrá cargar tres cartuchos. Si el arma es de calibre 17, 222 ó 223, el cargador tiene capacidad para cinco cartuchos. Vea la Figura 6.
6. Coloque un cartucho en la recámara.
7. Emplee los dedos para empujar los cartuchos en el cargador completamente hacia abajo. Empuje lentamente hacia adelante el mecanismo del cerrojo de manera que el cerrojo se deslice por encima de los cartuchos en el cargador.
8. Empuje hacia abajo el mango del cerrojo.

LA RECAMARA Y EL CARGADOR ESTAN AHORA COMPLETAMENTE CARGADOS.

9. Para disparar el arma coloque el seguro en la posición «F».

EL ARMA ESTA LISTA PARA SER DISPARADA.

ADVERTENCIA: Antes de cargar el arma verifique siempre que el cartucho sea del calibre correcto.

CARGUE EL CARTUCHO DE LA MANERA ILUSTRADA

Figura 6

METODO ALTERNATIVO PARA CARGAR LA RECAMARA Y EL CARGADOR: (PARA EL MODELO 700 CON CAJA DE CARGADOR DESMONTABLE)

1. Apunte el arma en una dirección sin peligro.
2. Coloque el seguro en la posición «S».
3. Levante el mango del cerrojo.
4. Tire completamente hacia atrás el mango del cerrojo.
5. Oprima hacia dentro los dos sujetadores del cargador y retire del arma la caja del cargador. Vea la Figura 7.
6. Coloque cuatro cartuchos del calibre correcto, uno después del otro, en la caja del cargador, empujando los cartuchos hacia la parte posterior del cargador. Si el arma es magnum, sólo podrá cargar tres cartuchos. Mantenga las balas alineadas hacia la recámara, Vea la Figura 7.
7. Coloque la caja del cargador en la abertura del guardamonte y empújela hasta que los dos sujetadores se enganchen en la posición totalmente fija.

EL CARGADOR ESTA AHORA COMPLETAMENTE CARGADO.

8. Coloque un cartucho del calibre correcto en la recámara. Vea la Figura 6.
9. Emplee los dedos para empujar los cartuchos completamente hacia abajo en la caja del cargador. Deslice lentamente hacia adelante el mecanismo del cerrojo de manera que el cerrojo se deslice por encima de los cartuchos en la caja del cargador.
10. Empuje hacia abajo el mango del cerrojo para fijar el cartucho en la recámara.

LA RECAMARA Y EL CARGADOR ESTAN AHORA COMPLETAMENTE CARGADOS.

11. Para disparar el arma coloque el seguro en la posición «F».

EL ARMA ESTA LISTA PARA DISPARAR.

ADVERTENCIA: Antes de cargar el arma verifique siempre que el cartucho sea del calibre correcto.

Figura 7

OPRIMA HACIA ADENTRO LOS DOS SUJETADORES DEL CARGADOR

DESCARGA DEL ARMA

Existen tres tipos de rifles Modelo 700: uno con PLACA INFERIOR de cargador, otro sin PLACA INFERIOR y otro con CAJA DE CARGADOR DESMONTABLE.

INSTRUCCIONES PARA LOS MODELOS CON UNA PLACA INFERIOR:

1. Apunte la boca del arma en dirección sin peligro.
2. Coloque el seguro en la posición «S».
3. Levante el mango del cerrojo.
4. Coloque una mano sobre la parte superior de la salida del extractor.
5. Con la otra mano, corra lentamente el mango del cerrojo hacia atrás para sacar el cartucho de la recámara.
6. Sostenga el cartucho y retírelo del arma.
7. Coloque su mano bajo la placa inferior.

8. Empuje el sujetador de la placa inferior a fin de liberarla. Vea la Figura 8. El resorte y seguidor del cargador se soltarán del cargador.

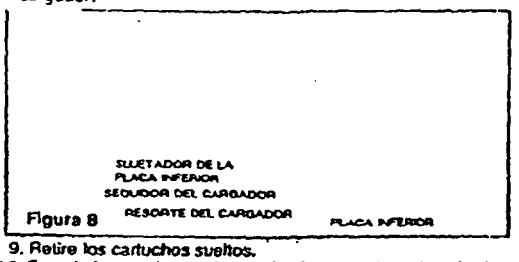

Figura 8

9. Retire los cartuchos sueltos.
10. Empuje hacia adentro el seguidor del cargador y cierre la placa inferior.

ADVERTENCIA: Inspeccione la recámara y el cargador para asegurarse que no queden cartuchos en el arma.

INSTRUCCIONES PARA LOS MODELOS SIN UNA PLACA INFERIOR:

1. Repita los pasos 1 a 6 anteriores.
2. Mantenga la boca del cañón apuntada en una dirección sin peligro. Empuje lentamente hacia adelante el mango del cerrojo hasta que un cartucho se suelte del cargador.

PRECAUCION: El cartucho puede deslizarse dentro de la recámara si se empuja el cerrojo demasiado hacia adelante. Vea la observación más abajo.

3. Tire completamente hacia atrás el mango del cerrojo y retire el cartucho de la salida de eyección.

4. Repita los pasos 2 y 3 hasta vaciar el cargador.

ADVERTENCIA: Inspeccione la recámara y el cargador para asegurarse que no queden cartuchos en el arma.

OBSERVACION: El arma puede dispararse si se empuja el cerrojo completamente hacia adelante y se introduce un cartucho en la recámara. Normalmente, los cartuchos saldrán de la recámara cuando se retira el cerrojo. Si el cartucho se queda en la recámara, apunte el rifle en una dirección sin peligro, corra el cerrojo completamente hacia adelante y empuje el mango hacia abajo para cerrar el cerrojo. Repita luego los pasos 1 a 4 anteriores.

INSTRUCCIONES PARA LOS MODELOS CON UNA CAJA DE CARGADOR DESMONTABLE:

1. Apunte el arma en una dirección sin peligro.
2. Coloque el seguro en la posición «S».
3. Levante el mango del cerrojo.
4. Coloque una mano sobre la parte superior de la salida del extractor.
5. Con la otra mano, corra lentamente el mango del cerrojo hacia atrás para sacar el cartucho de la recámara.
6. Oprima hacia adentro los dos sujetadores del cargador y retire del arma la caja del cargador. Vea la Figura 7.
7. Saque los cartuchos de la caja del cargador.
8. Instale la caja del cargador.

ADVERTENCIA: Inspeccione la recámara y la caja del cargador para asegurarse que no queden cartuchos en el arma.

PR 0501

AJUSTE DE MIRAS

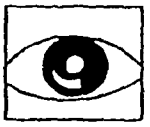

Todos los modelos con miras son ajustados en fábrica para un blanco a 92 metros.

AJUSTE DEL ALZA:

Mueva el alza en la misma dirección que necesita mover la bala en el blanco.

Figura 9

OBSERVACION: Para obtener mayor información sobre balística y trayectoria, vea el catálogo de REMINGTON.

MIRAS TELESCOPICAS: La parte superior del cajón de mecanismos tiene orificios para instalar miras telescópicas.

POSICION EN EL BLANCO	AJUSTES
La bala golpea encima del centro.	a. Afloje el tornillo de elevación en el alza. b. Corra el alza hacia abajo(hacia atrás) en la rampa. c. Ajuste el tornillo de elevación.
La bala golpea debajo del centro.	a. Afloje el tornillo de elevación en el alza. b. Corra el alza hacia arriba(hacia adelante) en la rampa. c. Ajuste el tornillo de elevación.
La bala golpea a la izquierda	a. Afloje el tornillo de corrección lateral en el alza. b. Corra hacia la derecha la abertura del alza. c. Ajuste el tornillo de corrección lateral.
La bala golpea a la derecha.	a. Afloje el tornillo de corrección lateral en el alza. b. Corra hacia la izquierda la abertura del alza. c. Ajuste el tornillo de corrección lateral.

PR 0502

LUBRICACION Y MANTENIMIENTO

LUBRICACION:
Evite siempre el exceso de lubricación. Sólo se requiere una capa delgada de aceite Rem™ para prevenir la corrosión. Vea la Observación más abajo.

Antes de guardar el arma limpiela y acéitela completamente. Las superficies exteriores deben recibir una capa fina ocasional de aceite Rem™.

Antes de volver a utilizar el arma debe eliminarse el exceso de aceite. Limpie completamente la recámara y la superficie interior del cañón.

OBSERVACION: Tanto el aceite Rem™ de Remington como el lubricante húmedo Teflon® de DuPont pueden obtenerse donde su distribuidor local. Si las existencias del distribuidor se han agotado, pídale que ordene aceite Rem™ del distribuidor de Remington.

LIMPIEZA DEL CAÑON:

ADVERTENCIA: Inspeccione la recámara y el cargador para comprobar que no queden cartuchos en el arma.

1. Emplee el equipo provisto en un juego de limpieza de buena calidad. Puede obtener sugerencias donde un armero autorizado de Remington.
2. Desmonte el cerrojo. Lea las instrucciones en la página 5.
3. Seleccione la escobilla de limpieza del calibre correcto e instálela en la baqueta.
4. Introduzca la escobilla de limpieza en el solvente de limpieza del arma.

OBSERVACION: Durante la limpieza, el cañón debe descansar horizontalmente con la salida de eyección hacia abajo. Limpie siempre el cañón desde el extremo de la recámara hasta la boca.

5. Corra la escobilla por el cañón varias veces.
6. Retire la escobilla de la baqueta, coloque la punta con la estopa de limpieza y pásela por el interior del cañón.
7. Repita esto varias veces utilizando cada vez una nueva estopa de limpieza y hasta que salga limpia.
8. Pase por el cañón una estopa limpia saturada con aceite Rem™.
9. Pase por el cañón una estopa limpia y seca para eliminar el exceso de aceite.
10. Con una estopa limpia y suave, aplique una capa delgada de aceite Rem™ sobre la superficie exterior del cañón.
11. Después de limpiar el cañón, limpie el cajón de mecanismos y el mecanismo del gatillo.

ADVERTENCIA: Remington Arms Company, Inc. o un ARMERO RECOMENDADO POR REMINGTON debe revisar el arma periódicamente. De esta manera se garantiza una inspección correcta y el reemplazo de cualquier pieza desgastada o dañada.

PR 0503

LIMPIEZA DEL CAJON DE MECANISMOS Y MECANISMO DEL GATILLO

1. Coloque el seguro en la posición «S».
2. Desmonte el cerrojo. Lea las instrucciones en la página 5
3. Coloque el rifle con el gatillo hacia arriba.
4. Retire los tornillos del guardamonte del gatillo. Vea la Figura 10.

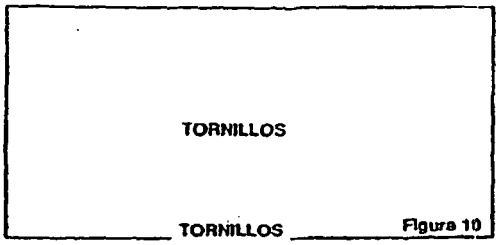

Figura 10

5. Levante la caja separándola del cajón de mecanismos y mecanismo del gatillo.

SOLO PARA MODELOS SIN PLACA INFERIOR:

Retire del cajón de mecanismos el resorte y el seguidor del cargador.

OBSERVACION: Limpie con aceite Rem™ el cajón y el mecanismo del gatillo como una sola unidad.

6. Rocie con aceite Rem™ el cajón de mecanismos y los cuatro puntos del mecanismo del gatillo. Vea la Figura 11. Deje reposar durante 15 minutos. Rocíe otra vez para lavar los componentes. Sacúdalos para eliminar el exceso de lubricante.

nents. Shake off excess lubricant.

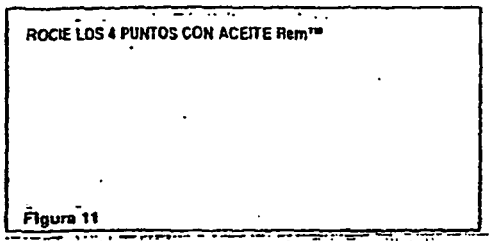

Figura 11

ADVERTENCIA: El empleo excesivo de un lubricante no recomendado puede causar graves problemas de funcionamiento que podrían conducir a la descarga accidental del arma.

ARMADO DE LOS MODELOS SIN PLACA INFERIOR:

1. Instale el seguidor del cargador y el resorte en el cargador.
2. Coloque la caja del rifle sobre el cajón de mecanismos y el mecanismo del gatillo.
3. Instale y ajuste los tornillos en el guardamonte.

ADVERTENCIA: Compruebe que el cañón se encuentre libre de obstrucciones antes de instalar el cerrojo.

4. Instale el cerrojo. Lea las instrucciones en la página 5.

ARMADO DE LOS MODELOS SOLO CON PLACA INFERIOR:

Introduzca completamente el cargador hasta el fondo del cajón de mecanismos.

MODELOS CON PLACA INFERIOR O CARGADOR DESMONTABLE:

1. Instale el guardamonte sobre la caja del rifle.
2. Coloque la caja sobre el cajón de mecanismos y el mecanismo del gatillo.
3. Instale y ajuste los tornillos del guardamonte.
4. Cierre la placa inferior o instale el cargador desmontable.

ADVERTENCIA: Compruebe que el cañón se encuentre libre de obstrucciones antes de instalar el cerrojo.

5. Instale el cerrojo. Lea las instrucciones en la página 5.

ADVERTENCIA: Después de limpiar el mecanismo del gatillo, revise tanto la recámara como el cargador comprobando que no queden cartuchos en el arma. Coloque el seguro en la posición -F-. Cierre bien el cerrojo. El percutor debe quedar armado. Para comprobarlo, tire del gatillo. El percutor debe caer. Repita la prueba por lo menos diez veces. Si el percutor no queda armado luego de cerrar bien el cerrojo, envíe el arma a la fábrica o a un ARMERO RECOMENDADO POR REMINGTON.

FRECUENCIA DE LIMPIEZA:

1. Antes y después de estar guardada por mucho tiempo.
2. Cuando se ha sometido el rifle a condiciones adversas tales como disparar bajo la lluvia, nieve, granizo o áreas de agua salada.
3. Cuando se ha expuesto el rifle a la suciedad, como al dejarlo sobre la tierra, al caer en el lodo, etc.

OBSERVACION: Aunque el rifle *Modelo 700 Stainless Synthetic* ha sido diseñado y fabricado con el fin de prestar una mejor protección contra la corrosión, únicamente el cuidado adecuado mantendrá el arma en buenas condiciones de funcionamiento a la vez que se conserva su apariencia. Luego de un uso extensivo, la capa protectora en las piezas enchapadas puede desgastarse lo suficiente para disminuir la protección anticorrosiva. Tales piezas desgastadas deben reemplazarse a fin de asegurar la integridad de la protección anticorrosiva.

ADVERTENCIA: Siga las instrucciones de lubricación y mantenimiento en este manual de instrucción luego de utilizar el arma. Si se ha sumergido el arma en agua, debe limpiarse y lubricarse completamente tan pronto como sea posible. En caso de inmersión en agua salada, lave primero bien todas las piezas en agua dulce y luego seque, limpie y lubrique el arma. Si el rifle no funciona correctamente, hágalo reparar por un armero calificado antes de volverla a utilizar. El hacer caso omiso de esta advertencia puede causar desperfectos que podrían resultar en lesiones corporales graves.

INSTRUCCIONES DE LIMPIEZA DEL MECANISMO DEL CERROJO

PARA DESARMAR EL CERROJO

1. Desmonte el cerrojo del arma. Lea las instrucciones en la página 5.
2. Coloque la muesca en la cabeza del percutor sobre un borde de metal. Tire del mecanismo del cerrojo separándolo del percutor. Inserte una moneda en la ranura junto al extremo posterior de la cabeza del percutor. Vea la Figura 12.
3. Sostenga el mecanismo del cerrojo y gire el obturador del cerrojo hacia la izquierda hasta que se pueda retirar el percutor del mecanismo del cerrojo.

PRECAUCION: Limpie el mecanismo del percutor como una unidad.

4. Limpie todas las piezas con un solvente de limpieza de armas. Séquelas con una tela limpia.
5. Aplique una capa fina de aceite Rem™.

ARMADO:

1. Introduzca el mecanismo del percutor en la parte posterior del mecanismo del cerrojo.
2. Ajuste manualmente el obturador dentro del mecanismo del cerrojo.
3. Retire la moneda de la ranura en la cabeza del percutor.
4. Gire el obturador del cerrojo hasta que la cabeza del percutor entre en la muesca pequeña en el borde posterior del cerrojo. El cerrojo se encuentra ahora armado. Vea la Figura 13.

OBSERVACION: El cerrojo debe armarse para poder instalarlo en el rifle.

5. Instale en el rifle el mecanismo del cerrojo. Vea las instrucciones en la página 5.

Figura 12

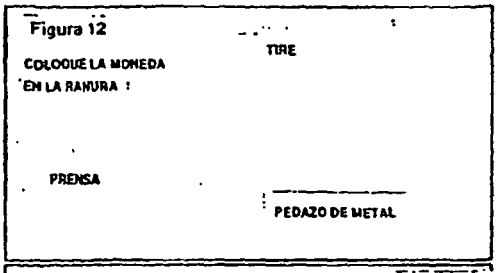

Figura 13

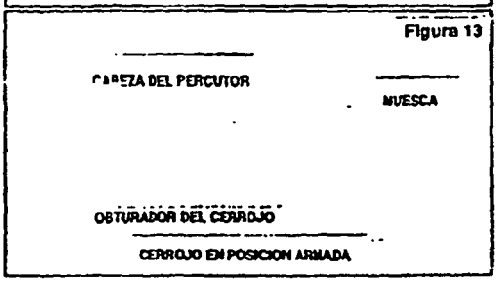

PR 0506

PEDIDO DE PIEZAS Y SERVICIO DE REMINGTON

PEDIDO DE PIEZAS Y SERVICIO DE REMINGTON

Las piezas de repuesto representadas en las ilustraciones pueden comprarse donde cualquier distribuidor Remington en su país. Junto con el arma se incluye una lista completa de los distribuidores Remington autorizados.

Si no encuentra la lista, pida el libreto:
«Remington Authorized Gunsmiths»
(Armeros autorizados por Remington)

A: Remington Arms Company, Inc.
Ilion, New York 13357-1888
United States of America

O envíe su pedido por fax al: (EE.UU.) 315-895-3659

La correspondencia con el distribuidor Remington autorizado debe incluir el número de modelo, número de serie, calibre o diámetro, nombre de la pieza exactamente como aparecen en las páginas siguientes. El distribuidor Remington autorizado tendrá mucho gusto de informarle el precio de las piezas, mano de obra, envío, seguro e impuestos.

Reparación de armas:

Para obtener reparaciones para su arma donde un armero autorizado por Remington, refiérase al folleto «Remington Authorized Gunsmiths» (Armeros autorizados por Remington). Por su seguridad, es importante que sólo un armero autorizado por Remington repare su arma.

Para enviar el arma, incluya el modelo, número de serie, calibre o diámetro. Incluya una nota en la cual se describa el problema y escriba su nombre, dirección, código postal; país, números de teléfono y fax con los códigos correspondientes a la ciudad y país.

Coloque esta información en un sobre dentro de la caja de envío. Siga cualquier otra instrucción de envío proporcionada por el armero autorizado por Remington.

Por seguridad, descargue siempre el arma. NUNCA incluya munición junto con el arma.

MODELO 700

Rifle de cerrojo de percusión central

PEDIDO DE PIEZAS Y SERVICIO

LISTA DE PIEZAS DEL MODELO 700

LAS PIEZAS ESTAN SUJETAS A CAMBIOS SIN PREVIO AVISO: FOB ILION, NUEVA YORK, EE.UU.

Vista No.	NOMBRE DE LA PIEZA
	OBSERVACION: A continuación se lista el calibre 30-06 básico. Vea la vista ampliada para la identificación correcta de las piezas.
1	Cañón
2	Mecanismo del cerrojo
3	Obturador del cerrojo
4	Fiador del cerrojo (restringido)
5	Pasador del fiador del cerrojo (restringido)
6	Resorte del fiador del cerrojo (restringido)
7	Marco de la placa de culata (no se ilustra el nuevo estilo)
	Inserto de la placa de culata (no se ilustra el nuevo estilo)
8	Espaciador de la placa de culata grado BDL
9	Tornillo de la placa de culata
10	Tornillo de guarda central grado ADL 1 Eyector
11	Eyector
12	Pasador del eyector
13	Resorte del eyector
14	Extractor
16	Mecanismo del percutor
17	Pasador del percutor
18	Sujetador de la placa inferior, Grado BDL
19	Pasador del sujetador de la placa inferior, Grado BDL
20	Resorte del sujetador de la placa inferior, Grado BDL
21	Pasador-pivote de la placa inferior, Grado BDL
22	Tornillo de guarda delantero (BDL)
23	Casquillo del tornillo de guarda delantero, Grado ADL
24	Punto de mira
	Punto de mira (bajo)
25	Rampa del punto de mira, BDL
26	Tornillo de rampa del punto de mira
27	Cubierta del punto de mira

Vista No.	NOMBRE DE LA PIEZA
29	Tornillo giratorio delantero
	Tapa de la empuñadura, Grado BDL (no ilustrada)
	Espaciador de la tapa de la empuñadura (no ilustrada)
30	Cargador, Grado ADL
30a	Mecanismo del cargador, BDL
	(Cargador desmontable no ilustrado)
	Cargador, Grado BDL (no ilustrado)
31	Seguidor del cargador, ADL
	Seguidor del cargador, BDL
	Tornillo de la lengüeta del cargador, Grado ADL
32	Resorte del cargador, Grado ADL
	Resorte del cargador, Grado BDL
33	Muelle principal
34	Tornillo de guarda posterior
35	Abertura del alza
	Mecanismo del alza
	Base del alza
37	Tornillo de la base del alza (2)
38	Corredera del alza
39	Tornillo de elevación
40	Tornillo giratorio posterior
41	Tornillo sin cabeza del cajón de mecanismos
42	Pasador del fiador (restringido)
44	Caja, Grado ADL
	Caja, Grado BDL
46	Mecanismo del gatillo (restringido)
47	Guardamonte, Grado ADL
48	Ensamble del guardamonte, Grado BDL
	Guardamonte, (Cargador desmontable no ilustrado)
49	Tornillo de corrección lateral

PR 0509

WICHTIG

Dieses Heft lesen, bevor Sie die Schußwaffe in Gebrauch nehmen

GEBRAUCHSANWEISUNGEN

Modell 700 Gewehr mit Bolzenverschluß, Mittenfeuerung

PR 0510

Modell 700 Gewehr mit Bolzenverschluß, Mittenfeuerung

Wir gratulieren! Ihr Remington-Gewehr wird Ihnen bei sachgemäßer Pflege lange Jahre zuverlässigen Dienst leisten.

Um die besten Ergebnisse zu erzielen, empfehlen wir den Gebrauch von Remington-Munition. Diese Munition wurde bei der Werksprüfung Ihrer Schußwaffe, bei der unsere strengen Funktions- und Leistungsnormen eingehalten wurden, benutzt.

Abbildung 1

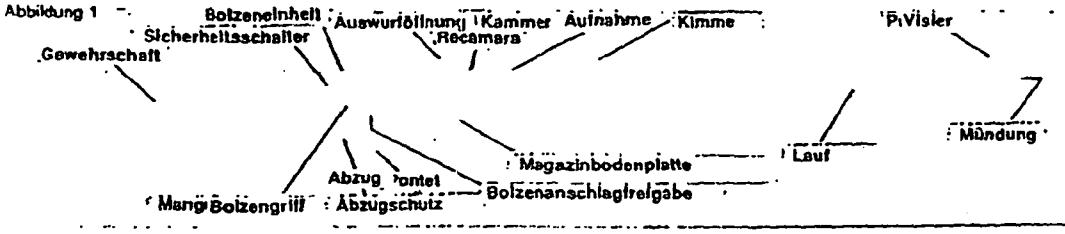

In der Abbildung werden die wichtigsten Teile des Remington- Gewehrs Modell 700 mit Bolzenverschluß dargestellt. Diese Abbildung verhilft Ihnen zu einem besseren Verständnis der Anweisungen.

Abbildung 2
Munition

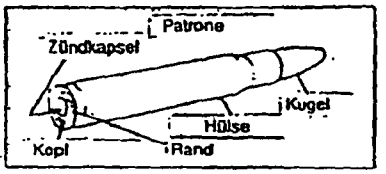

Diese Abbildung zeigt die Teile der Munition.

PR 0511

Sicherheitsregeln

ACHTUNG

Diese Sicherheitsregeln aufmerksam lesen. Lernen Sie den sicheren Umgang mit Ihrer Schußwaffe. Wenn Sie es versäumen, diese Sicherheitsregeln zu lesen, zu verstehen und zu befolgen, kann daraus schwere Verletzung entstehen. Nur Sie selbst können Unfälle verhindern.

Machen Sie sich mit der Schußwaffe vertraut. Um sie richtig und sicher zu benutzen, sind die Anweisungen in dem beiliegenden Sicherheitshandbuch für Schußwaffen und in diesen Gebrauchsanweisungen aufmerksam zu lesen und zu befolgen. Zusätzliche Exemplare sind kostenlos auf Anfrage von Remington Arms Company, Inc. erhältlich.

Jede Schußwaffe ist so zu handhaben, als ob sie geladen wäre. Verlassen Sie sich nicht auf den Sicherheitsschalter. Dieser ist den Anweisungen in diesem Heft gemäß zu gebrauchen. Auch wenn der Sicherheitsschalter betätigt ist, kann unsachgemäße Handhabung dazu führen, daß die Schußwaffe feuert. Möglicherweise ist der Sicherheitsschalter nicht wirklich eingerastet, vielleicht ist der interne Mechanismus beschädigt, außer Betrieb gesetzt oder abgeändert, oder vielleicht wurde der Sicherheitsschalter durch unsachgemäße Handhabung inaktiviert.

Niemals Einstellungen vornehmen. Keine Abänderungen oder Modifikationen irgendwelcher Teile der Schußwaffe vornehmen. Nur Ersatzteile von REMINGTON verwenden. Niemals eine Einstellung am Abzug vornehmen, oder die Größe oder Form der Verschlußstange, der Verschlußstangenkerbe oder anderer Teile ändern.

Sichern Sie sich selbst ab. Tragen Sie beim Schießen Augenschutz, wie z.B. Brille, Schutzbrille oder Sonnenbrille. Tragen Sie beim Scheibenschießen bzw. Übungsschießen Gehörschutz wie z.B. Ohrenpropfen oder Ohrenkappen. Wiederholte Exposition an Schußlärm kann permanenten Gehörverlust verursachen. Fehlfunktion der Schußwaffe oder Versagen der Hülse, auch wenn das seltene Ereignisse sind, kann zu Gehörschaden oder Augenverletzung führen. Niemals schießen, wenn Ihre Fähigkeit dazu durch Alkohol oder Arzneimittel beeinträchtigt ist.

Pflegen Sie Ihre Schußwaffe. Der Lauf ist immer sauber und von Blockierungen frei zu halten. Die Schußwaffe ist regelmäßig zu putzen und auf mechanische Funktion überprüfen zu lassen. Abgenutzte, beschädigte oder fehlende Teile können gefährlich sein.

Achten Sie auf die Laufmündung. Die Schußwaffe ist immer in eine Richtung zu richten, in der sie niemanden gefährdet.

PR 0512

Sicherheitsregeln

Niemals die falsche Munition gebrauchen. Nur die Munition gebrauchen, die genau den Kalibermarkierungen Ihrer Schußwaffe entspricht. Unaufmerksames oder falsches Laden per Hand ist gefährlich. Bei falschem Laden per Hand besteht die Gefahr, daß der Lauf oder der Verschluß einer handgehaltenen Schußwaffe bersten könnte, was zu schwerer Verletzung führen kann.

Laden Sie die Schußwaffe auf sichere Weise. Die Schußwaffe niemals laden, bis Sie sich an einer Stelle befinden, wo das Schießen keine Gefahr darstellt, und bis Sie zum Schießen bereit sind.

Achten Sie genau auf das Ziel. Bevor Sie den Abzug drücken, vergewissern Sie sich, daß Sie das Ziel und den Weg der Kugel oder der Schrotkugeln hinter dem Ziel klar vor Augen haben. Niemals auf Wasser, Steine oder eine harte Oberfläche schießen. Die Kugeln können von solchen Oberflächen abprallen und Verletzungen verursachen.

Behalten Sie die Reichweite Ihrer Schußwaffe im Sinn. Nicht zu vergessen: Flintenschrotkorn kann bis zu 500 Meter erreichen, Flintenschrotkugeln mehr als 800 Meter, Kugeln mit Randfeuerung erreichen mehr als 2,5 km und Kugeln mit Mittenfeuerung bis zu 8 km.

Falls die Schußwaffe nicht feuert, ist sie so zu halten, daß sie in eine sichere Richtung gerichtet ist, dann vorsichtig zu entladen, wobei Berührung des Verschlusses zu vermeiden ist. Falls die Schußwaffe feuert aber der Knall oder Rückstoß schwach erscheint, entladen und dann sicherstellen, daß der Lauf nicht blockiert ist.

Die Schußwaffe immer entladen, wenn Sie nicht schießen. Eine geladene Schußwaffe niemals tragen oder in einem Gebäude oder Fahrzeug aufbewahren. Die Schußwaffe immer entladen, bevor Sie irgendein Hindernis, wie z.B. einen Baumstamm, Zaun, Baumstand oder unsicheren Boden überqueren oder hoch- bzw. herunterklettern, wobei Sie verhindert sind, die Schußwaffe vollständig unter Kontrolle zu behalten.

Die Schußwaffe sicher aufbewahren. Schußwaffen und Munition für Kinder unzugänglich aufbewahren. Ungeladene Schußwaffen und Munition nicht an derselben Stelle sondern getrennt aufbewahren.

ACHTUNG: Das Feuern von Schußwaffen in schlecht belüfteten Bereichen, das Putzen von Schußwaffen und die Handhabung von Munition kann zu Exposition an Blei führen. Diese Substanz ist dafür bekannt, daß sie Geburtsfehler, Beschädigung der Fortpflanzungsorgane und weiteren schweren Körperschaden verursachen kann. Es ist immer ausreichende Belüftung vorzusehen. Nach der Exposition gründlich die Hände waschen.

PR 0513

Wichtige Komponenten der Schußwaffe

Der Sicherheitsschalter

Der Sicherheitsschalter bietet Schutz gegen versehentliches oder unbeabsichtigtes Abfeuern bei normalem Gebrauch, wenn er richtig eingerastet ist und gut funktioniert.

Um den Sicherheitsschalter zu betätigen, ist er in die "S"- Stellung zu bringen. Siehe Abbildung 3.

Der Sicherheitsschalter ist immer in die "S"-Stellung zu bringen, bevor die Schußwaffe gehandhabt, geladen oder entladen wird.

Wenn Sie bereit sind, die Schußwaffe zu feuern, ist der Sicherheitsschalter in die "F"-Stellung zu bringen, um ihn zu inaktivieren. Siehe Abbildung 4.

Den Abzug nicht anrühren, während der Sicherheitsschalter bewegt wird.

Den Abzug niemals drücken, während der Sicherheitsschalter sich in der "S"-Stellung befindet.

ACHTUNG: Die Schußwaffe feuert, wenn der Abzug gedrückt wird und der Sicherheitsschalter sich in der "F"-Stellung befindet.

Auch wenn der Sicherheitsschalter sich in der "S"-Stellung befindet, kann unsachgemäße Handhabung dazu führen, daß die Schußwaffe feuert. Siehe Sicherheitsregeln auf Seite 2

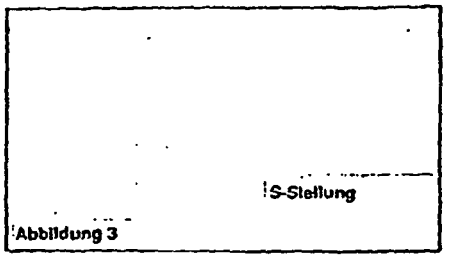

Abbildung 3

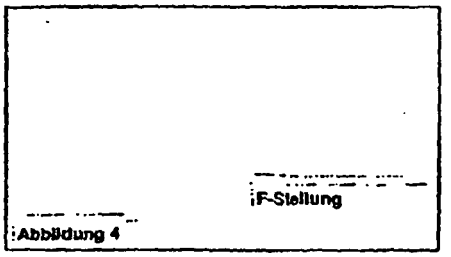

Abbildung 4

Die Bolzeneinheit

Die Bolzeneinheit verriegelt die Patrone in der Kammer.

Einlegen der Bolzeneinheit:

1. Die Schußwaffe in eine sichere Richtung richten.
2. Den Sicherheitsschalter in die "S"-Stellung bringen.
3. Die Ansätze der Bolzeneinheit mit der Aufnahme ausrichten. Siehe Abbildung 5.
4. Die Bolzeneinheit in die Aufnahme gleiten lassen und ganz eindrücken.
5. Um die Bolzeneinheit in die geschlossene Stellung zu bringen, den Bolzengriff herunterdrücken.

Entfernen der Bolzeneinheit:

1. Die Schußwaffe in eine sichere Richtung richten.
2. Den Sicherheitsschalter in die "S"-Stellung bringen.
3. Den Abzug nicht berühren, während Sie den Sicherheitsschalter bewegen.
4. Den Bolzengriff anheben.
5. Den Bolzengriff ganz zurückziehen.
6. Bolzenanschlagfreigabe drücken. Siehe Abbildung 5.
7. Beim Drücken der Bolzenanschlagfreigabe den Bolzen aus der Schußwaffe herausziehen.

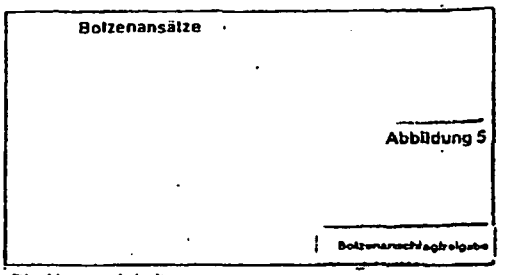

Abbildung 5

Die Abzugseinheit:

Die Schußwaffe wird durch Druck auf den Abzug geleuert.

Der Abzug wird im Werk eingestellt.

Alle Einstellungen des Abzugs müssen im Werk oder von einem VON REMINGTON EMPFOHLENEN BUCHSENMACHER vorgenommen werden.

ACHTUNG: NIEMALS den Abzugsmechanismus ausbauen oder Einstellungen des Abzugs oder der Abzugseinheit vornehmen.

ACHTUNG: NIEMALS den Finger auf den Abzug legen, wenn Sie nicht beabsichtigen, die Schußwaffe zu feuern.

PR 0515

Der Lauf

Der Lauf muß innen sauber und von Blockierungen frei sein.

I. Überprüfen des Laufs von innen:

1. Die Schußwaffe in eine sichere Richtung richten.
2. Den Sicherheitsschalter in die "S"-Stellung bringen.
3. Den Bolzengriff anheben.
4. Den Bolzen ganz zurückziehen.
5. Munition aus der Kammer oder dem Magazin entfernen. Siehe Seite 8.
6. Bolzen entfernen. Siehe Seite 5.
7. Innen durch den Lauf hindurch sehen, von der Kammer bis zur Mündung. Siehe Abbildung 1.

II. Entfernen von Gegenständen aus dem Lauf:

1. Eine Putzstange der richtigen Größe gebrauchen.
2. Die Putzstange von dem Kammerende ganz durch den Lauf schieben, bis sie aus der Mündung austritt.
3. Wenn ein Gegenstand nicht leicht mit einer Putzstange aus dem Lauf herausgeschoben werden kann, ist die Schußwaffe an das Werk oder an einen VON REMINGTON EMPFOHLENEN BÜCHSENMACHER zu senden.

ACHTUNG: NIEMALS versuchen, einen Gegenstand aus dem Lauf zu entfernen, indem Sie eine Patrone laden und abfeuern. Dabei besteht die Gefahr, daß der Lauf oder die Patronenhülse bersten könnte, was zu schwerer Verletzung führen kann.

III. Putzen des Gewehrlaufes, siehe Seite 10.

Bevor Sie die Schußwaffe laden ist sicherzustellen, daß der Lauf von innen sauber und nicht blockiert ist.

Besonders zu beachten:
Modell 700 Ladeanweisungen für .220 SWIFT-Patronen

Im Gegensatz zu anderen Patronen, die in die Kammer der Schußwaffe Modell 700 geladen werden, sind die .220 SWIFT- Patronen mit Halbrand versehen. Um also richtigen Vorschub sicherzustellen muß der Rand der oberen Patrone vor dem Rand der darunterliegenden Patrone liegen.

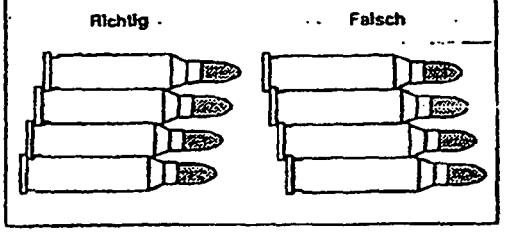

PR 0516

Laden der Schußwaffe

Es gibt drei Arten der Gewehre Modell 700: Eine mit Bodenplatte, eine ohne Bodenplatte und eine mit abnehmbarem Magazinkasten.

I. Laden einer einzigen Patrone:

1. Die Schußwaffe in eine sichere Richtung richten.
2. Den Sicherheitsschalter in die "S"-Stellung bringen.
3. Den Bolzengriff anheben.
4. Den Bolzengriff ganz zurückziehen.
5. Eine Patrone des richtigen Kalibers auf den Kammeraufhalter oder in die Kammer legen. Siehe Abbildung 6.
6. Den Bolzengriff nach vorne gleiten lassen, dann herunterdrücken, um die Patrone in der Kammer zu verriegeln.

Die Schußwaffe ist jetzt geladen.

7. Um die Schußwaffe zu feuern, den Sicherheitsschalter in die "F"-Stellung bringen.

Die Schußwaffe ist jetzt bereit zu feuern.

II. Laden der Kammer und des Magazins:

1. Die Schußwaffe in eine sichere Richtung richten.
2. Den Sicherheitsschalter in die "S"-Stellung bringen.
3. Den Bolzengriff anheben.
4. Den Bolzengriff ganz zurückziehen.
5. Vier Patronen des richtigen Kalibers eine zur Zeit in das Magazin laden. Wenn die Schußwaffe ein Modell Magnum ist, können nur drei Patronen geladen werden. Wenn die Schußwaffe ein Modell Kaliber 17, 222 oder 223, können fünf Patronen in das Magazin geladen werden. Die Kugeln in Richtung auf die Kammer ausrichten. Siehe Abbildung 6.
6. Eine Patrone in die Kammer einlegen.
7. Die Patronen im Magazin mit den Fingern ganz nach unten drücken. Die Bolzeneinheit langsam nach vorne gleiten lassen, damit der Bolzen über die Patronen im Magazin hinweg gleitet.
8. Den Bolzengriff herunterdrücken.

Die Kammer und das Magazin sind jetzt völlig geladen.

9. Um die Schußwaffe zu feuern, den Sicherheitsschalter in die "F"-Stellung bringen.

Die Schußwaffe ist jetzt bereit zu feuern.

ACHTUNG: Die Patronen immer auf richtigen Kaliber überprüfen, bevor die Schußwaffe geladen wird.

Patrone wie dargestellt laden

Abbildung 6

Alternativverfahren zum Laden der Kammer und des Magazins: (Bei Modell 700 mit abnehmbarem Magazinkasten)

1. Die Schußwaffe in eine sichere Richtung richten.
2. Den Sicherheitsschalter in die "S"-Stellung bringen.
3. Den Bolzengriff anheben.
4. Den Bolzengriff ganz zurückziehen.
5. Beide Magazinverriegelungen nach innen drücken und den Magazinkasten aus der Schußwaffe herausnehmen. Siehe Abbildung 7.
6. Vier Patronen des richtigen Kalibers eine zur Zeit in den Magazinkasten laden, dabei die Patronen in Richtung auf die Rückseite des Magazins schieben. Wenn die Schußwaffe ein Modell Magnum ist, können nur drei Patronen geladen werden. Die Kugeln in Richtung auf die Kammer ausrichten. Siehe Abbildung 7.
7. Den Magazinkasten in die Abzugschutzöffnung legen und drücken, bis beide Verriegelungen in der ganz verriegelten Stellung einrasten.

Das Magazin ist jetzt völlig geladen.

8. Eine Patrone des richtigen Kalibers in die Kammer einlegen. Siehe Abbildung 6.
9. Die Patronen im Magazin mit den Fingern ganz nach unten drücken. Die Bolzeneinheit langsam nach vorne gleiten lassen, damit der Bolzen über die Patronen im Magazin hinweg gleitet.
10. Den Bolzengriff herunterdrücken, um die Patrone in der Kammer zu verriegeln.

Die Kammer und das Magazin sind jetzt völlig geladen.

11. Um die Schußwaffe zu feuern, den Sicherheitsschalter in die "F"-Stellung bringen.

Die Schußwaffe ist jetzt bereit zu feuern.

ACHTUNG: Die Patronen immer auf richtigen Kaliber überprüfen, bevor die Schußwaffe geladen wird.

Abbildung 7

Beide Magazinverriegelungen nach innen drücken

Entladen der Schußwaffe

Es gibt drei Arten der Gewehre Modell 700: Eine mit Bodenplatte, eine ohne Bodenplatte und eine mit abnehmbarem Magazinkasten.

Anweisungen für Modelle mit Bodenplatte:

1. Die Schußwaffe in eine sichere Richtung richten.
2. Den Sicherheitsschalter in die "S"-Stellung bringen.
3. Den Bolzengriff anheben.
4. Eine Hand über die Auswurföffnung legen.
5. Den Bolzengriff mit der anderen Hand langsam zurückziehen, um die Patrone aus der Kammer zu entfernen.
6. Die Patrone festhalten und aus der Schußwaffe herausnehmen.
7. Die Hand unter die Bodenplatte legen.

PR 0518

8. Die Bodenplattenverriegelung drücken, um die Bodenplatte freizugeben. Siehe Abbildung 8. Die Magazinfeder und der Aufhalter werden aus dem Magazin freigegeben.

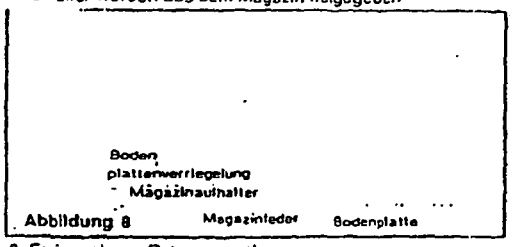

Abbildung 8

9. Freigegebene Patronen entfernen.
10. Den Magazinaufhalter eindrücken, dann die Bodenplatte schließen.

ACHTUNG: Die Kammer und das Magazin überprüfen, um sicherzustellen, daß sich keine Patronen mehr in der Schußwaffe befinden.

Anweisungen für Modelle ohne Bodenplatte:

1. Die obigen Schritte 1 bis 6 wiederholen.
2. Die Mündung weiterhin in eine sichere Richtung richten. Den Bolzengriff langsam nach vorne schieben, bis eine Patrone aus dem Magazin freigegeben wird. VORSICHT: Die Patrone kann in die Kammer rutschen, falls der Bolzen zu weit geschoben wird. Siehe Hinweis unten.
3. Den Bolzengriff ganz zurückziehen und die Patrone aus der Auswurföffnung herausnehmen.
4. Schritte 2 und 3 wiederholen, bis das Magazin leer ist.

ACHTUNG: Die Kammer und das Magazin überprüfen, um sicherzustellen, daß sich keine Patronen mehr in der Schußwaffe befinden.

ZU BEACHTEN: Falls der Bolzen ganz nach vorne gedrückt wird und eine Patrone in die Kammer rutscht, kann die Schußwaffe gefeuert werden. Normalerweise gleiten die Patronen aus der Kammer, wenn der Bolzen zurückgezogen wird. Wenn eine Patrone in der Kammer bleibt, ist die Mündung in eine sichere Richtung zu richten, der Bolzen ganz nach vorne zu schieben und der Bolzengriff zu drücken, um den Bolzen zu schließen. Dann die obigen Schritte 1 bis 4 wiederholen.

Anweisungen für Modelle mit abnehmbarem Magazinkasten:

1. Die Schußwaffe in eine sichere Richtung richten.
2. Den Sicherheitsschalter in die "S"-Stellung bringen.
3. Den Bolzengriff anheben.
4. Eine Hand über die Auswurföffnung legen.
5. Den Bolzengriff mit der anderen Hand langsam zurückziehen, um die Patrone aus der Kammer zu entfernen.
6. Beide Magazinverriegelungen nach innen drücken und den Magazinkasten aus der Schußwaffe herausnehmen. Siehe Abbildung 7.
7. Die Patronen aus dem Magazinkasten entfernen.
8. Den Magazinkasten wieder einlegen.

ACHTUNG: Die Kammer und das Magazin überprüfen, um sicherzustellen, daß sich keine Patronen mehr in der Schußwaffe befinden.

PR 0519

Einstellen der Kimme und des Visiers

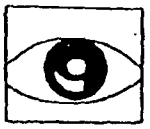

Alle Modelle mit Kimme bzw. Visier werden im Werk so eingestellt, daß sie ein Ziel auf 90 Meter treffen.

Einstellen der Kimme:

Die Kimme in der Richtung bewegen, die nötig ist, um die Kugel auf das Ziel auftreffen zu lassen.

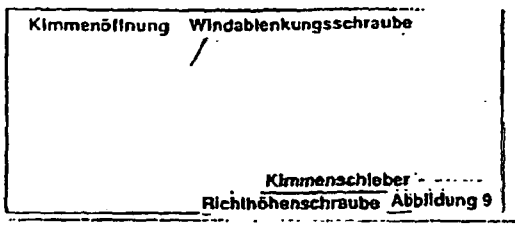

Abbildung 9

ZU BEACHTEN: Um zusätzliche Informationen bezüglich Ballistik und Schußlinie zu erhalten, siehe den REMINGTON-Katalog.

Visierfernrohr: Oben in der Aufnahme befinden sich Löcher zur Visierfernrohr- Montage.

Aufschlag auf Ziel	Einstellungen
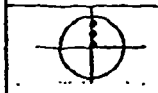 Kugel trifft über der	a. Richthöhenschraube der Kimme Mitte auf. lockern. b. Kimme nach unten (hinten) auf der Rampe gleiten lassen. c. Richthöhenschraube festziehen.
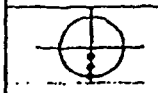 Kugel trifft unter der	a. Richthöhenschraube der Kimme Mitte auf. lockern. b. Kimme nach oben (vorne) auf der Rampe gleiten lassen. c. Richthöhenschraube festziehen.
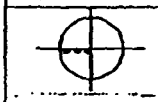 Kugel trifft links	a. Windablenkungsschraube der Kimme neben der Mitte auf. lockern. b. Kimmenöffnung nach rechts gleiten lassen. c. Windablenkungsschraube festziehen.
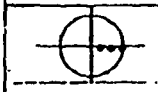 Kugel trifft rechts	a. Windablenkungsschraube der Kimme neben der Mitte auf. lockern. b. Kimmenöffnung nach links gleiten lassen. c. Windablenkungsschraube festziehen.

PR 0520

Schmieren und Wartung

Schmieren: Übermäßiges Schmieren ist unbedingt zu vermeiden. Ein dünner Film Rem™-Öl verhindert Rost. Siehe Hinweis unten.

Wenn die Schußwaffe weggelegt werden soll, ist sie sorgfältig zu putzen und gründlich zu ölen. Die Außenflächen sind gelegentlich mit einem dünnen Film Rem™-Öl abzuwischen.

Wenn die Schußwaffe wieder in Gebrauch genommen wird, sind überschüssige Schmiermittel zu entfernen. Die Kammer und die Bohrung müssen gründlich trockengewischt werden.

ZU BEACHTEN: Remington Rem™-Öl mit DuPont Teflon® Naßschmiermittel ist von Ihrem örtlichen Fachhändler erhältlich. Wenn dieser das Öl nicht auf Lager hat, bitten Sie ihn, dieses vom Remington-Distributoren zu bestellen.

Lauf putzen:

ACHTUNG: Die Kammer und das Magazin überprüfen, um sicherzustellen, daß sich keine Patronen in der Schußwaffe befinden.

1. Die mit einer hochwertigen Putzausrüstung mitgelieferten Vorrichtungen gebrauchen. Empfehlungen können Sie von Ihrem von Remington genehmigten Büchsenmacher einholen.
2. Die Bolzeneinheit entfernen. Siehe Anweisungen auf Seite 5.
3. Die Putzbürste des richtigen Kalibers auswählen und die Bürste an die Putzstange befestigen.
4. Die Putzbürste in das Gewehr-Putzmittel tauchen.

ZU BEACHTEN: Beim Putzen sollte der Lauf waagerecht liegen und die Auswurföffnung nach unten gerichtet sein. Den Lauf immer von der Kammer aus in Richtung auf die Mündung putzen.

5. Die Putzbürste mehrmals durch den Lauf schieben.
6. Die Bürste von der Stange abnehmen, Spitze mit Putzlappen befestigen und durch die Bohrung schieben.
7. Mehrmals wiederholen, wobei jedesmal ein frischer Putzlappen zu verwenden ist, bis der Lappen keinen Schmutz aufweist.
8. Einen sauberen mit Rem™-Öl getränkten Putzlappen durch den Lauf schieben.
9. Einen sauberen, trockenen Putzlappen durch den Lauf schieben, um überschüssiges Schmiermittel zu entfernen.
10. Mit einem weichen, sauberen Tuch einen dünnen Film Rem™-Öl außen auf den Lauf auftragen.
11. Nachdem der Lauf geputzt wurde, die Aufnahme und die Abzugseinheit putzen.

ACHTUNG: Diese Schußwaffe ist regelmäßig von der Remington Arms Company, Inc. oder einem VON REMINGTON EMPFOHLENEN BÜCHSENMACHER zu überprüfen. Dadurch wird richtige Kontrolle und der nötige Ersatz abgenutzter oder beschädigter Teile sichergestellt.

PR 0521

Aufnahme und Abzugseinheit putzen:

1. Den Sicherheitsschalter in die "S"-Stellung bringen.
2. Die Bolzeneinheit entfernen. Siehe Anweisungen auf Seite 5.
3. Das Gewehr auf den Kopf stellen.
4. Die Schrauben von dem Abzugschutz entfernen. Siehe Abbildung 10.

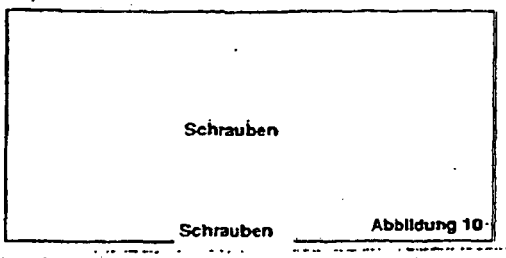

Abbildung 10

5. Den Gewehrschaft von der Aufnahme und der Abzugseinheit abheben

Nur für Modelle ohne Bodenplatte:

Die Magazinfeder und den Aufhalter von der Aufnahme entfernen.

ZU BEACHTEN: Die Aufnahme und die Abzugseinheit als Einheit mit Rem™-Öl putzen.

6. Die Aufnahme und die vier Spitzen der Abzugseinheit mit Rem™-Öl besprühen. Siehe Abbildung 11. 15 Minuten lang stehen lassen. Nochmals besprühen, um die Komponenten abzuspülen. Überschüssigen Schmierstoff abschütteln.

nents. Shake off excess lubricant.

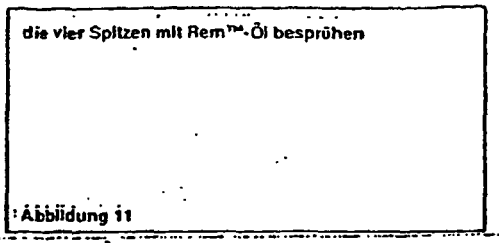

Abbildung 11

ACHTUNG: Übermäßiger Gebrauch eines nicht empfohlenen Schmiermittels kann zu bedeutender Funktionsstörung und möglicherweise zu versehentlicher Feuerung führen.

Montage von Modellen ohne Bodenplatte:

1. Den Magazinaufhalter und die Feder in das Magazin legen.
2. Den Gewehrschaft über die Aufnahme und die Abzugseinheit legen.
3. Die Abzugschutzschrauben wieder einlegen und festziehen.

ACHTUNG: Bevor die Bolzeneinheit wieder eingesetzt wird, sicherstellen, daß sich im Lauf keine Blockierungen befinden.

PR 0522

4. Die Bolzeneinheit wieder einlegen. Siehe Anweisungen auf Seite 5.

Nur für Modelle mit Bodenplatte:

Das Magazin ganz nach unten in die Aufnahme legen.

Modelle mit Bodenplatte oder abnehmbarem Magazin:

1. Die Abzugschutzeinheit auf den Gewehrschaft montieren.
2. Den Gewehrschaft über die Aufnahme und die Abzugseinheit legen.
3. Die Abzugschutzschrauben wieder einlegen und festziehen.
4. Die Bodenplatte schließen bzw. das abnehmbare Magazin wieder einlegen.

ACHTUNG: Bevor die Bolzeneinheit wieder eingesetzt wird, sicherstellen, daß sich im Lauf keine Blockierungen befinden.

5. Die Bolzeneinheit wieder einlegen. Siehe Anweisungen auf Seite 5.

ACHTUNG: Nachdem die Abzugseinheit geputzt wurde, sind die Kammer und das Magazin zu überprüfen, um sicherzustellen, daß sich keine Patronen in der Schußwaffe befinden. Den Sicherheitsschalter in die "F"-Stellung bringen. Den Bolzen zuschnappen. Der Zündstift muß gespannt bleiben. Um das zu überprüfen ist der Abzug zu drücken. Der Zündstift muß fallen. Dieser Test ist mindestens zehnmal zu wiederholen. Falls der Zündstift nicht gespannt bleibt, wenn der Bolzen zugeschnappt wird, ist die Schußwaffe an das Werk oder an einen VON REMINGTON EMPFOHLENEN BÜCHSENMACHER einzusenden.

Putzintervalle:

1. Vor und nach längerer Lagerung.
2. Wenn das Gewehr harten Bedingungen ausgesetzt war, wie z.B. Schießen im Regen, Schnee, Eisregen oder in Salzwasserbereichen.
3. Wenn das Gewehr schmutzigen Bedingungen ausgesetzt war, z.B. es hat draußen auf der Erde gelegen, wurde in Schlamm fallengelassen, usw.

ZU BEACHTEN: Obwohl das Gewehr Modell 700 aus Edelstahl und Kunststoff so konstruiert und hergestellt wurde, daß es besseren Korrosionsschutz bietet, ist angemessene Pflege erforderlich, damit Ihre Schußwaffe weiterhin gute Funktion und gutes Aussehen bietet. Nach längerem Gebrauch ist die Schutzschicht auf galvanisch behandelten Teilen möglicherweise so weit abgenutzt, daß der Korrosionsschutz verringert ist. Solche abgenutzten Teile sind zu ersetzen, um die Integrität des Korrosionsschutzes sicherzustellen.

ACHTUNG: Nach jedem Gebrauch sind die in diesem Handbuch angegebenen Anweisungen bezüglich Schmieren und Wartung zu befolgen. Wenn die Schußwaffe in Wasser eingetaucht wurde, ist sie sobald wie möglich gründlich zu putzen und zu schmieren. Falls sie in Salzwasser eingetaucht wurde, zuerst alle Teile mit frischem Wasser spülen, dann die Schußwaffe trocknen, putzen und schmieren. Wenn die Schußwaffe nicht richtig funktioniert, ist sie von einem qualifizierten Büchsenmacher zu reparieren, bevor sie wieder in Gebrauch genommen wird. Bei Mißachten dieses Warnhinweises kann Fehlfunktion der Schußwaffe eintreten, die zu schwerer Verletzung führen kann.

Anweisungen zum Putzen der Bolzeneinheit

Demontage der Bolzeneinheit:

1. Die Bolzeneinheit von der Schußwalle entfernen. Siehe Anweisungen auf Seite 5.
2. Die Kerbe am Zündstift über eine Metallkante legen. Die Bolzeneinheit vom Zündstift wegziehen. In den Schlitz in der Nähe der rückwärtigen Kante des Zündstiftkopfes eine Münze einstecken. Siehe Abbildung 12.
3. Die Bolzeneinheit festhalten und den Bolzenstöpsel gegen den Uhrzeigersinn drehen, bis die Zündstifteinheit aus der Bolzeneinheit herausgezogen werden kann.

VORSICHT: Die Zündstifteinheit als Einheit putzen.

4. Alle Teile mit Gewehr-Putzmittel reinigen. Mit einem sauberen Tuch trocknen.
5. Einen dünnen Film Rem™-Öl auftragen.

Montage:

1. Die Zündstifteinheit hinten in die Bolzeneinheit einlegen.
2. Den Bolzenstöpsel per Hand in der Bolzeneinheit festziehen.
3. Die Münze aus dem Schlitz im Zündstiftkopf herausziehen.
4. Den Bolzenstöpsel drehen, bis der Zündstiftkopf in der kleinen Kerbe am hinteren Rand des Bolzens einrastet. Der Bolzen ist jetzt gespannt. Siehe Abbildung 13.

ZU BEACHTEN: Der Bolzen muß gespannt sein, um in das Gewehr montiert zu werden.

5. Die Bolzeneinheit in das Gewehr montieren. Siehe Anweisungen auf Seite 5.

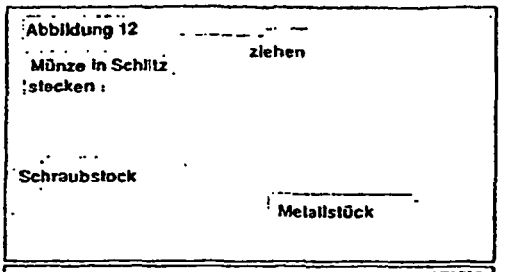

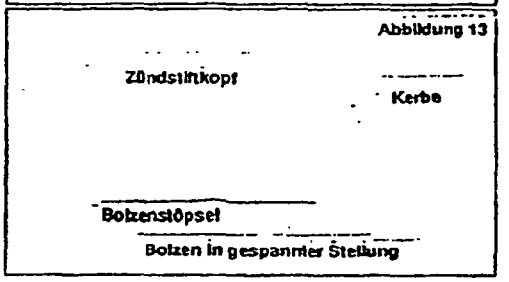

PR 0524

Wie man Ersatzteile und Service von REMINGTON erhält

Wie man Ersatzteile und Service von REMINGTON erhält

Sie können die in den Zeichnungen dargestellten Ersatzteile von jedem von Remington zugelassenen Vertriebsvertreter erhalten. Eine Liste aller von Remington zugelassenen Vertriebshändler wird mit der Schußwaffe mitgeliefert.

Falls die Liste fehlt, bestellen Sie das Heft:
«Remington Authorized Gunsmiths»
(Von Remington zugelassene Büchsenmacher)

von:

Customer Service Division
Remington Arms Company, Inc.
Ilion, New York 13357-1888
United States of America

oder senden Sie Ihre Anfrage per Fax an: (USA) 315-895-3659

Bei Korrespondenz an einen von Remington zugelassenen Vertriebshändler geben Sie bitte die Modellnummer, die Seriennummer, das Kaliber und die Ersatzteilbezeichnung, wie sie auf den folgenden Seiten erscheint, an. Der Vertriebshändler steht gerne bereit, Ihnen die Kosten für diese Ersatzteile, Arbeit, Versand, Versicherung und Steuern zu nennen.

Service:

Um Ihre Schußwaffe von einem von Remington zugelassenen Büchsenmacher warten zu lassen, beziehen Sie sich auf das Heft «Remington Authorized Gunsmiths» (Von Remington zugelassene Büchsenmacher). Aus Sicherheitsgründen ist es unabdingbar, daß Sie Ihre Schußwaffe nur durch einen von Remington zugelassenen Büchsenmacher warten lassen.

Wenn Sie Ihre Schußwaffe einsenden, geben Sie bitte das Modell, die Seriennummer und das Kaliber an. Legen Sie eine kurze Beschreibung des Problems bei, und geben Sie Ihren Namen, Ihre Adresse mit Postleitzahl und Land, sowie Ihre Telefon- bzw. Telefaxnummer mit Land- und Stadtvorwahl an.

Diese Informationen sind in einem Umschlag in den Versandkarton zu legen. Befolgen Sie die Versandanweisungen, die Sie von Ihrem von Remington zugelassenen Büchsenmacher erhalten.

Aus Sicherheitsgründen ist die Schußwaffe vor dem Versand zu entladen. NIEMALS Munition mit der Schußwaffe verpacken.

Modell 700

Gewehr mit Bolzenverschluß, Mittenfeuerung

Bestellen von Ersatzteilen und Service

MODELL 700, ERSATZTEILLISTE

Ersatzteile können ohne vorherige Bekanntgabe geändert werden:
FOB Ilion, New York, U.S.A.

ANSICHT-NR.	ERSATZTEILBEZEICHNUNG
	ZU BEACHTEN: Kaliber 30-06, Grundausstattung, wird nachstehend aufgeführt. Siehe perspektivische Darstellung der Einzelteile zur richtigen Bezeichnung der Teile.
1	Laufeinheit
2	Bolzeneinheit
3	Bolzenstöpsel
4	Bolzenanschlag (Verfügbarkeit eingeschränkt)
5	Bolzenstöpselstift (Verfügbarkeit eingeschränkt)
6	Bolzenanschlagfeder (Verfügbarkeit eingeschränkt)
7	Kolbenblechgestell (neuer Typ nicht dargestellt
	Kolbenblecheinsatz (neuer Typ nicht dargestellt)
8	Kolbenblechdistanzhalter
9	Kolbenblechschraube
10	Mittenschutzschraube, Qualität ADL
11	Auswerfer
12	Auswerferstift
13	Auswerferfeder
14	Abziehvorrichtung
16	Zündstifteinheit
17	Zündstifteuzstift
18	Bodenplattenverriegelung, Qualität BDL
19	Bodenplattenverriegelungsstift, Qualität BDL
20	Bodenplattenverriegelungsfeder, Qualität BDL
21	Bodenplattenschwenkstift, Qualität BDL
22	Vorderschutzschraube (BDL)
23	Vorderschutzschraubenbüchse, Qualität ADL
24	Visier Visier (niedrig)
25	Visierrampe, BDL
26	Visierrampenschraube
27	Visierraube

ANSICHT-NR.	ERSATZTEILBEZEICHNUNG
29	Vorderschwenkschraube
	Griffkappe, Qualität BDL (nicht dargestellt)
	Griffkappendistanzhalter (nicht dargestellt)
30	Magazin, Qualität ADL
30a	Magazineinheit, BDL
	(abnehmbares Magazin nicht dargestellt)
	Magazin, Qualität BDL (nicht dargestellt)
31	Magazinaufhalter, ADL
	Magazinaufhalter, BDL
	Magazinkaschenschraube, Qualität ADL
32	Magazinfeder, Qualität ADL
	Magazinfeder, Qualität BDL
33	Hauptfeder
34	Hinterschutzschraube
35	Kimmenöffnung
	Kimmeneinheit
	Kimmensockel
37	Kimmensockelschraube (2)
38	Kimmenschieber
39	Richthöhenschraube
40	Hintere Schwenkstelle
41	Aufnahmestöpselschraube
42	Verschlußstangenstift (Verfügbarkeit eingeschränkt)
44	Gewehrschaftteinheit, Qualität ADL
	Gewehrschaftteinheit, Qualität ADL
46	Abzugseinheit (Verfügbarkeit eingeschränkt)
47	Abzugschutz, Qualität ADL
48	Abzugschutzeinheit, Qualität BDL
	Abzugschutz (abnehmbares Magazin, nicht dargestellt)
49	Wendablenkungsschraube

PR 0527

BLANK

PR 0528

Printed in U.S.A.

Remington is a trademark registered in the United States Patent and Trademark Office by Remington Arms Company, Inc.

Form RD 5461
Rev. 994

PR 0529

PRIVILEGED & CONFIDE' 'AL
ATTORNEY/CLIENT COMMUNICATION

September 1, 1994

TO: R. HASKIN

FROM: K. KEN

RE: MULTI-LINGUAL INSTRUCTION BOOK

It has been decided to put a multi-lingual instruction book in most of our gun boxes. The first application is for the detachable magazine M/700. I have reviewed the text for the English version which is basically a repeat of our existing 700 book with additions to cover the detachable magazine. Smart Communications of New York City prepared the translations of French, German and Spanish.

Blue proofs are due at Ilion shortly. Upon approval, the printer can give us books quickly so we can warehouse the guns.

Please review the English version to see if we need to correct any gross errors. In addition, do we need to have someone else review the translated versions?

KDG:tpp

xc: S. Rensi

PR 0530

Confirm Haskin got this

REMINGTON ARMS CO., INC.
ILION, NY 13357

PRIVILEGED & CONFIDENTIAL
ATTORNEY/CLIENT COMMUNICATION

December 1, 1994

TO: S. RENSI
R. HASKIN

FROM: K. GREEN

M700 Fire Control

COMPONENTS:

SSC Material – Powdered Metal
Heat Treat
Grind Bottom Connector Surface
Chrome Plate
Grind Connector Surface
Demagnetize

T Powdered Metal
De-burr
Drill and Ream Pin Hole
Countersink Pin Hole
Color - Black Oxide or Nickel Plate

C AISI 1010
Heat Treat
Magnetic Particle Inspect
Color - Black Oxide or Nickel Plate

TESTING:

Historically, we have used a written protocol for new products and design changes and expect to in the future. The protocol would be modified to fit test objectives if necessary. Maximum number of cycles for subject components is 100m.

ESTIMATED HIGH SIDE USAGE:

SPORT	PER YEAR	LIFETIME
Hunting	50	1,500
Silhouette	2,000	40,000
Prairie Dog	5,000	100,000
Target	5,000	100,000

NOTE: BARREL LIFE ESTIMATED AT 5M ROUNDS

Q. Source

Captain Haskin got this Reviewed 12/15

REMINGTON ARMS CO., INC.
ILION, NY 13357

PRIVILEGED & CONFIDENTIAL
ATTORNEY/CLIENT COMMUNICATION

December 1, 1994

TO: S. RENSI
R. HASKIN

FROM: K. GREEN

COMPONENTS:

SSC Material -- Powdered Metal
Heat Treat
Grind Bottom Connector Surface
Chrome Plate
Grind Connector Surface
Demagnetize

T Powdered Metal
De-burr
Drill and Ream Pin Hole
Countersink Pin Hole
Color - Black Oxide or Nickel Plate

C AISI 1010
Heat Treat
Magnetic Particle Inspect
Color - Black Oxide or Nickel Plate

TESTING:

Historically, we have used a written protocol for new products and design changes and expect to in the future. The protocol would be modified to fit test objectives if necessary. Maximum number of cycles for subject components is 100m.

PR 0535

Sam Rensi Phone call 12/16/94

- drawings done Mon
- Max-Min tolerance (two weeks)
- testing ~~done~~ Started
- 16 week tooling
- so fire control begin assembly by 1/3/94
- Sam is as happy with the current design as he can be at this point in time

- week of March 20
- Keep parts for Sniper weapon system - existing design
- Left hand to follow but not impact right hand

PR 0549

Remington®

Remington Arms Company, Inc.
Ilion, New York
(Fax No. (315) 895-3661)

DATE: 12-28-94

TO: Bob Hastin

_____ (BLDG./ROOM NO.)

_____ (PHONE)

FROM: Sam Rensi

_____

_____ (PHONE)

TOTAL NUMBER OF PAGES, INCLUDING THIS SHEET: 3

COMMENTS:

R
FAX TO HASKIN

TEST AND MEASUREMENTS LAB

DECEMBER 27, 1994

MODEL 700 FIRE CONTROL TEST PROGRAM

UPDATE # 3

TO: R. J. ORF
FROM: J. H. HENNINGS

XC: E. S. RENBI
D. L. THOMPSON
R. A. JACKSON
T. A. HANCOCK
F. E. MARTIN
J. R. SNEDEKER

* Test program under way on CONTROL SAMPLES. A total of 46 samples at 10,000 cycles. Fifteen (15) samples selected to continue to 20,000 cycles.

* Three (3) Dry Cycle machines in operation. When the additional parts ordered are received, the fourth machine will be constructed.

* Special drop test frame and fixtures has been located. Also have the modified actions and stocks to fit the fixture. The fixture is being set up for testing. Video results from previous tests being copied for "E" Town shipment. High Speed Camera system ready for use. New 16mm color film ordered. Impact Media yet to be determined and obtained.

* Cables have been installed for the Pendulum Drop Test Area. Attachment collars and snaps have to be made and tested. Maple Plank and SAAMI Rubber Mat media ready for use.

* Revised Test Lab work schedule underway. The week of Dec. 27 will have some people out at various times because of vacation time, but this will not affect program dramatically.

The week between Christmas and New Years will be a 14 hour Test Day with all phases of the program covered.

After the first of the year the Test Day extends to 22 hours per day with all phases of the program covered.
Weekends; the Majority of the men would rather work extra during the week and have the weekends off but several are willing to work Saturdays as well. There are several people out in Plant Production Area more than qualified to assist and willing to work week ends if requested. A list is being prepared.

* Procedures being established for Environmental and Debris Tests.

* Lock Time measurements completed on control samples with results within Design parameters.

* SAAMI Drop Tests completed on Control Samples with acceptable results.

REMINGTON ARMS COMPANY, INC.
WILMINGTON, DE 19805-1270

cc: Jay Bunting
Bob Haskin
Tony Hancock

4/11/95

To: Danny Diaz

Subject: M/700 Features

The product strategy for the M/700 is to maintain the M/700 brand while evolving the rifle by refining features. Listed below are several potential areas for review.

- o Re-styled open sights– 1997
- o "5R" Rifling (Enhanced accuracy) – 1997
- o Titanium firing pin (Reduced lock time)– 1996
- o Field strippable bolt assembly – 1997
- o Bolt Lock – 1997
- o Electronic trigger mechanism – 1996
- o Recoil reduction system – 1996 MUZZLELOADER
  1997 OTHER

John R Belo

PR 0614

REMINGTON ARMS COMPANY, INC.

CC: Robert Haskin
John Balio

FAX

April 26, 1995

TO: SAM RENSI

FROM: JAY BUNTING

1996 NEW PRODUCT DEVELOPMENT

The following products are listed on the development schedule for 1996 introduction. The designs of these products will require review, testing and technical documentation support. It is my proposal that this work be conducted in Ilion under the direction of Bob Orf.

The products involved are:

- Model 700 Classic 375 H&H
- Model 870 Police with Ghost Ring Sights
- Model 7400 Non-Detachable Clip
- Model 395 Skeet Over and Under
- Model 700 Sendero Stainless Fluted
- Model 700 Police 223 Rem. with 1/9" Twist
- Model 700 Police and TWS with Detachable Magazine Box (308 Win. only)
- "Euro Sporting" Over and Under (source: Beretta product)
- Side Lock Muzzle Loader (percussion cap sourced from Thompson Center)
- Model 1100 28 Gauge Target
- Model 700 Action Only (part sales)
- Model 700 for supply to Beretta

For Ilion to support these projects, the resources must be available to conduct a thorough design review, establish and execute a testing protocol and develop a production process (if necessary).

Please let me know as soon as possible if Ilion is able to support these projects so that the development schedule can be updated with the correct project responsibilities.

It is critical that if Ilion takes on these responsibilities, that they can be supported and completed in an effective and cost efficient manner.

Please let me know should you have any questions.

JMB:rsh:newprod.doc

REMINGTON ARMS COMPANY, INC.

May 5, 1995

TO: ROBERT W. HASKIN, JR.

FROM: JAY BUNTING JMB

MODEL 700 REFINEMENTS

Marketing would like to have the following features available for introduction as follows:

1996

- Electronic Fire Control
- Titanium Firing Pin
- Recoil Reduction System (Muzzle Break)

1997

- 5R Rifling for Enhanced Accuracy
- Restyled Open Sights
- Bolt Lock
- Field Strippable Bolt Assembly
- Advanced Recoil Reduction System (other than Muzzle Break)

PR 0621

JMB:rsh:700refin.doc

Response on Tape

ATTORNEY - CLIENT PRIVILEGE

MEMORANDUM

TO: Jay Bunting

FROM: Robert W. Haskin, Jr. RWH

DATE: May 2, 1995

SUBJECT: M700

John Balio's memo to Danny Diaz of April 11, 1995, identified a series of features that could be considered for refinement in the M700. Please identify your anticipated introduction dates for products with these features.

Thank you for your assistance.

RWH/da
a:\rwh0595\jmb700re

COPY

ATTORNEY - CLIENT PRIVILEGE

MEMORANDUM

TO: Jay Bunting

FROM: Robert W. Haskin, Jr. RWH

DATE: May 2, 1995

SUBJECT: M700

John Balio's memo to Danny Diaz of April 11, 1995, identified a series of features that could be considered for refinement in the M700. Please identify your anticipated introduction dates for products with these features.

Thank you for your assistance.

RWH/da
a:\rwh059\jmb700re

Jay:
I look forward to hearing from you.
Thanks
Rob
5-26

PR 0623

F: Marketing+Prod. Develop
copy to [illegible]
copy to 4 Beaches
[illegible]

ATTORNEY - CLIENT PRIVILEGE

MEMORANDUM

TO: Tony A. Hancock

FROM: Robert W. Haskin, Jr. [illegible]

DATE: May 10, 1995

SUBJECT: **NEW PRODUCT DEVELOPMENT SCHEDULE**

The following require R&D involvement:

FIREARMS

1996:

1. *Model 700 In-Line Black Powder

2. *Mid-Year Introduction of New Semi-Autoloading Rimfire Rifle (first of a family of products)

3. Model 700 Performance Enhancements, formally NBAR project:

   - New Fire Control
   - New Rifling (5R)
   - ~~Lock Time Improvements (Titanium Firing Pin or Equivalent)~~
   - Various Ergonomic Improvements
   - Recoil Reduction

4. Model 700 Varmint with Electronic Fire Control and Ammunition:

   - With the focus on the 9 1/2 large rifle primer, the following calibers should be slated for initial introduction: 220 Swift, 22-250 Remington, 243 Win. 6MM Remington.

5. *XP-100 Stainless Synthetic Hunter

   - Firearm to utilize 416 Stainless Barrel and Action and an OEM Synthetic Stock by McMillan or H.S. Precision.

6. Pump Action Shotgun with Electronic Fire Control and Ammunition (Due to the product's unique safety features, the target market would be current non gun owners for home defense purposes and Law Enforcement Agencies which are interested in unique lock out capabilities of an electronic Fire Control and/or Action.)

The designs of these products will require review, testing and technical documentation support. It is proposed that this work be conducted in Ilion under the direction of Bob Orf.

The products involved are:

- Model 700 Classic 375 H&H
- Model 870 Police with Ghost Ring Sights
- Model 7400 Non-Detachable Clip
- Model 395 Skeet Over and Under
- Model 700 Sendero Stainless Fluted
- Model 700 Police 223 Rem. with 1/9" Twist
- Model 700 Police and TWS with Detachable Magazine Box (308 Win. only)
- "Euro Sporting" Over and Under (source: Beretta product)
- Model 700 for supply to Beretta
- Side Lock Muzzle Loader (percussion cap sourced from Thompson Center)
- Model 1100 28 Gauge Target
- Model 700 Action Only (part sales)
- Muzzle Brakes

1997 & Beyond:

1. Continue introduction of new Autoloading Rimfire Rifle family:

   - 22 WMR
   - 22 Sporter

PR 0632

2. Model 11-87 Performance Enhancements, formally NCS:

   - Reliability improvements
   - Recoil reduction
   - Pattern and point of impact improvements
   - Manufacturability improvements
   - 11-87 Light Weight/Euro for European market

3. Model 870 Performance Enhancements:

   - Synthetic trigger plate assembly for Express shotguns
   - Pattern and point of impact improvements
   - Recoil reduction

4. Model 700 Ultra Magnum Series Rifles and Ammunition (co-development item, .30 caliber and larger)

5. New Generation of Over and Under Shotgun

   - Provides replacement for Peerless Field with entry into Clay Target Shooting Sports, i.e. Skeet, Trap and Sporting Clays

6. 8 Gauge Industrial Firearm Design and Development

Project proposals are in place for those line items marked with an asterisk. Project proposals will be forthcoming for all other new product requests.

AMMUNITION

1996:

1. Black Powder Projectiles

   - Round Balls
   - Conical Bullets
   - Sabot/Bullet Assemblies

PR 0633

2. Lead Free Pistol & Revolver Line

   - Key calibers: 9MM, 40 S&W, 45 ACP
   - Features lead free bullets
   - Incorporates heavy metal free primers

3. Leadless™ Pistol Revolver line expansions

   - Lead free primers
   - TEMC bullet design

4. Lead free Centerfire Component Primers

5. Lead free 8 ga. Industrial Loads

   - Features non-lead slug
   - Incorporates lead free Shotshell primer

6. Power-Lokt Varmint Bullet Process

   - Replaces all current Power-Lokt bullets with a highly accurate, lower cost bullet design that expands rapidly without over penetrating.

7. High Performance Rifle Ammunition Line

   - Key calibers include 270 Win, 308 Win, 30-06 SPGFD, 300 Win Mag
   - Bullet should incorporate unique design features in order to maximize on game performance.
   - Non-lead core desirable, but not mandated.

8. 357 Sig Golden Saber

9. #7 1/2 & #9 1/2 Electric Centerfire primer process

10. 209 Electric Shotshell primer process.

PR 0634

1997 AND BEYOND:

1. .22 Win Mag Ammunition Line

   - Specifications to include 40 grain FMJ and HP bullets.
   - Potential application for Power Lokt replacement design?

2. Steel Shot Manufacturing Process

   - Lower cost than current sourcing
   - Assures reliable supply

3. Steel Shot Performance Improvements

   - Improve steel Shotshell Ammunition performance via component design enhancements in:

     - Primers
     - Wads
     - Hull Configuration
     - Exterior moisture barriers.

   - Synergistic application with NCS firearms project

4. Golden Saber Upgrade

   - Core bonding process to insure near 100% weight retention - regardless of barrier test.
   - Methods other than hot soldering acceptable to obtain jacket-core integrity.

5. High Performance Ultra Mag Centerfire Rifle Cartridge family

6. 2nd Generation Steel Shot Target Loads

   - Lower cost
   - Cleaner burning
   - Reloading wad design
   - Reloading component availability

PR 0635

7. Biodegradable Shotshell Wads

   - Target Load application
   - Steel Shot application

8. Lead Free Rimfire Process

   - Low cost alternative to current process
   - Features non-lead bullet

9. Heavy Metal Free Centerfire Component Primers

10. Low Cost Shotshell Target Wads

ACCESSORIES

1996:

1. Ramrod extension

2. Combination breech plug-nipple wrench

3. Combination decapper/percussion and shotgun primers

4. CO_2 adapter (used for unloading)

FISHLINE

1996:

1. Fish scale (cost under $10.00)

RWH/da
a:\rwh0595\r&dnewpr

** DICTATED BUT NOT READ **

PR 0636

REMINGTON ARMS COMPANY, INC.

DELLE DONNE CORPORATE CENTER
1011 CENTRE ROAD
WILMINGTON, DE 19805-1270
FAX: (302) 993-8852

FROM THE OFFICE OF
ROBERT W. HASKIN, JR. - (302) 993-8514

DATE: May 12, 1995

TO: Ernest S. Rensi

COMPANY: Remington Arms Company, Ilion Office

FAX #: 315-895-3215

PHONE #: 315-895-3539

No. of Pages (including this page): 7

MESSAGE:

Mr. Rensi, my apologies, I did not know you were to receive a copy of this memorandum. If this is not the one you were looking for, please let me know.

Dolores

TO: R.W. Haskin, Jr.

FROM: John W. Ackley

DATE: May 8, 1995

SUBJECT: R & D Involvement - 1996 New Products

****

At this time, the only 1996 Accessories new product introduction that is impacted by R&D is the Blackpowder accessories line.

R&D has indicated that the following accessories unique to the in-line muzzleloader should be part of the introduction:

- Ramrod extension
- Combination breech plug-nipple wrench
- Combination decapper/percussion and shotgun primers
- CO_2 adapter (used for unloading)

Accessories has not been involved in this development up to this point.

Ackley is using Oxyoke's accessory line for ~~make sure compatible w/~~

Fishline

1996

1. Fish scale (cost under $10.00)

PR 0638

ATTORNEY - CLIENT PRIVILEGE

MEMORANDUM

TO: Tony A. Hancock

FROM: Robert W. Haskin, Jr. RWH/bw

DATE: May 10, 1995

SUBJECT: NEW PRODUCT DEVELOPMENT SCHEDULE

The following require R&D involvement:

FIREARMS

1996:

1. *Model 700 In-Line Black Powder

2. *Mid-Year Introduction of New Semi-Autoloading Rimfire Rifle (first of a family of products)

3. Model 700 Performance Enhancements, formally NBAR project:

   - New Fire Control
   - New Rifling (5R)
   - Lock Time Improvements (Titanium Firing Pin or Equivalent)
   - Various Ergonomic Improvements
   - Recoil Reduction

4. Model 700 Varmint with Electronic Fire Control and Ammunition:

   - With the focus on the 9 1/2 large rifle primer, the following calibers should be slated for initial introduction: 220 Swift, 22-250 Remington, 243 Win. 6MM Remington.

PR 0639

5. *XP-100 Stainless Synthetic Hunter

   - Firearm to utilize 416 Stainless Barrel and Action and an OEM Synthetic Stock by McMillan or H.S. Precision.

6. Pump Action Shotgun with Electronic Fire Control and Ammunition (Due to the product's unique safety features, the target market would be current non gun owners for home defense purposes and Law Enforcement Agencies which are interested in unique lock out capabilities of an electronic Fire Control and/or Action.)

   The designs of these products will require review, testing and technical documentation support. It is proposed that this work be conducted in Ilion under the direction of Bob Orf.

   The products involved are:

   - Model 700 Classic 375 H&H
   - Model 870 Police with Ghost Ring Sights
   - Model 7400 Non-Detachable Clip
   - Model 395 Skeet Over and Under
   - Model 700 Sendero Stainless Fluted
   - Model 700 Police 223 Rem. with 1/9" Twist
   - Model 700 Police and TWS with Detachable Magazine Box (308 Win. only)
   - "Euro Sporting" Over and Under (source: Beretta product)
   - Model 700 for supply to Beretta
   - Side Lock Muzzle Loader (percussion cap sourced from Thompson Center)
   - Model 1100 28 Gauge Target
   - Model 700 Action Only (part sales)
   - Muzzle Brakes

1997 & Beyond:

1. Continue introduction of new Autoloading Rimfire Rifle family:

   - 22 WMR
   - 22 Sporter

PR 0640

2. Model 11-87 Performance Enhancements, formally NCS:

   - Reliability improvements
   - Recoil reduction
   - Pattern and point of impact improvements
   - Manufacturability improvements
   - 11-87 Light Weight/Euro for European market

3. Model 870 Performance Enhancements:

   - Synthetic trigger plate assembly for Express shotguns
   - Pattern and point of impact improvements
   - Recoil reduction

4. Model 700 Ultra Magnum Series Rifles and Ammunition (co-development item, .30 caliber and larger)

5. New Generation of Over and Under Shotgun

   - Provides replacement for Peerless Field with entry into Clay Target Shooting Sports, i.e. Skeet, Trap and Sporting Clays

6. 8 Gauge Industrial Firearm Design and Development

Project proposals are in place for those line items marked with an asterisk. Project proposals will be forthcoming for all other new product requests.

AMMUNITION

1996:

1. Black Powder Projectiles

   - Round Balls
   - Conical Bullets
   - Sabot/Bullet Assemblies

PR 0641

2. Lead Free Pistol & Revolver Line

   - Key calibers: 9MM, 40 S&W, 45 ACP
   - Features lead free bullets
   - Incorporates heavy metal free primers

3. Leadless™ Pistol Revolver line expansions

   - Lead free primers
   - TEMC bullet design

4. Lead free Centerfire Component Primers

5. Lead free 8 ga. Industrial Loads

   - Features non-lead slug
   - Incorporates lead free Shotshell primer

6. Power-Lokt Varmint Bullet Process

   - Replaces all current Power-Lokt bullets with a highly accurate, lower cost bullet design that expands rapidly without over penetrating.

7. High Performance Rifle Ammunition Line

   - Key calibers include 270 Win, 308 Win, 30-06 SPGFD, 300 Win Mag
   - Bullet should incorporate unique design features in order to maximize on game performance.
   - Non-lead core desirable, but not mandated.

8. 357 Sig Golden Saber

9. #7 1/2 & #9 1/2 Electric Centerfire primer process

10. 209 Electric Shotshell primer process.

PR 0642

1997 AND BEYOND:

1. .22 Win Mag Ammunition Line

   - Specifications to include 40 grain FMJ and HP bullets.
   - Potential application for Power Lokt replacement design?

2. Steel Shot Manufacturing Process

   - Lower cost than current sourcing
   - Assures reliable supply

3. Steel Shot Performance Improvements

   - Improve steel Shotshell Ammunition performance via component design enhancements in:

     - Primers
     - Wads
     - Hull Configuration
     - Exterior moisture barriers.

   - Synergistic application with NCS firearms project

4. Golden Saber Upgrade

   - Core bonding process to insure near 100% weight retention - regardless of barrier test.
   - Methods other than hot soldering acceptable to obtain jacket-core integrity.

5. High Performance Ultra Mag Centerfire Rifle Cartridge family

6. 2nd Generation Steel Shot Target Loads

   - Lower cost
   - Cleaner burning
   - Reloading wad design
   - Reloading component availability

7. Biodegradable Shotshell Wads

   - Target Load application
   - Steel Shot application

8. Lead Free Rimfire Process

   - Low cost alternative to current process
   - Features non-lead bullet

9. Heavy Metal Free Centerfire Component Primers

10. Low Cost Shotshell Target Wads

ACCESSORIES

1996:

1. Ramrod extension
2. Combination breech plug-nipple wrench
3. Combination decapper/percussion and shotgun primers
4. CO_2 adapter (used for unloading)

FISHLINE

1996:

1. Fish scale (cost under $10.00)

RWH/da

** DICTATED BUT NOT READ **

Remington Confidential

MEMORANDUM

TO: ROBERT W. HASKIN, JR.
E.S. RENSI

FROM: TONY A. HANCOCK Tony

DATE: MAY 26, 1995

SUBJECT: ACCURACY ENHANCEMENTS FOR BOLT ACTION RIFLES

In our meeting on Thursday, May 25, 1995, we had considerable discussion over possible mechanisms of improving the accuracy of our bolt action rifle family. Since the meeting I have done some more thinking and would like to request your help in defining those things most likely to produce success in this area. In Remington's most recent catalog we have 17 calibers and several styles in the same calibers of the M 700 bolt action rifles and we manufacture may types of ammunition in each caliber. The test matrix necessary to establish the current accuracy across our product line represents a formidable task. If this is expanded to include competitive ammunitions the task becomes 4 or 5 times larger than this. In light of the size of this undertaking, I would like to propose an alternate way of achieving the same goal.

R & D will prepare a list and identify the areas which are thought to be the major contributors to bolt action rifle accuracy. We will select firearms which have been carefully measured and controlled with respect to the critical dimensions and test their accuracy using a controlled lot of ammunition. We will then modify the dimension being tested and again perform an accuracy test. This testing will continue until we are outside the specification limits for the particular dimension. The data from this test will provide a sensitivity analysis correlating the particular dimension or variable being changed to accuracy with all other things being held constant. I need your assistance on two things:

1. Please help us identify the top contributors to accuracy. I am attaching a list of those areas we believe to be most significant.

2. We plan to perform this testing on specially selected kinds of firearms and calibers. The idea would then be extended across the line to other firearm types and ammunitions. Data would be provided to marketing to substantiate any claims concerning accuracy improvement. We need your help in selecting the caliber and firearm type to begin this testing with.

Thanks in advance for your help. Please forward your responses back to me or Danny Diaz, as soon as possible.

TAH/rat
Enclosure
cc: Tommy Millner
File
a:\plan.doc

PR 0672

M/700 AE IMPROVEMENTS

Process Enhancements to Improve Accuracy

- Improved Receiver locking surface perpendicularlity
- Improved Receiver face / Barrel hub perpendicularlity
- Improved Bolt lug perpendicularlity to bolt body
- Improved Bolt face perpendicularlity to bolt lugs
- Reduced Barrel groove diameter and tolerance, especially at muzzle end
- Improved Barrel crowning
- Improved Barrel chamber concentricity
- Broach bolt hole versus the current drill operation

Design Enhancements to Improve Accuracy

- Reduce Lock Time
- Bedding of Barrel to stock (recoil lug and 1" of bbl)
- Muzzle Break with noise reduction

PR 0673

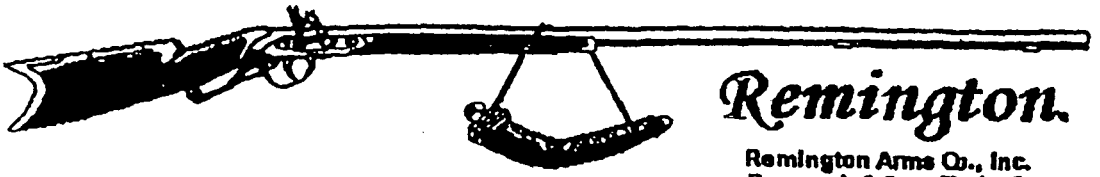

Remington.

Remington Arms Co., Inc.
Research & Dev. Tech. Center
315 W. Ring Rd.
Elizabethtown, KY 42702

Date: May 26, 1993
Number of pages including cover sheet 2

TO: Bob Haskin, Esq.

FROM: *Tony Hancock*
Vice-President

Phone
Fax Phone
cc:

Phone: *(502) 769-7601*
Fax Phone(502) 737-9576

Remarks:		
*Urgent	*For Your Review	*Reply ASAP

***** TRANSMISSION REPORT *****

MAY-26-95 17:27 ID:5027379876 REMINGTON STOWN

START TIME	MAY-26-95 17:26
TELEPHONE NUMBER	1-302-993-0855
NAME(ID NUMBER)	3029930855
TRANSMISSION MODE	EMMR
RESOLUTION	STD
PAGES TRANSMITTED	003
MAILBOX	OFF
SECURITY	OFF
INFORMATION CODE	OK
REDIALING TIMES	00
MACHINE ENGAGED	00'55
JOB NUMBER	527

THIS TRANSMISSION IS COMPLETED.

LAST SUCCESSFUL PAGE 003

PR 0675

A BEAUFORT HOTEL

LE BEAUFORT

NEUCHÂTEL

TELEFAX

Raison sociale Firma / Company	Fax US 502-737-9576
A l'attention de z. Hd von / Attention	Date Datum / Date 6-6-95
De la part de Von / From	Nombre de pages Anzahl Seiten / Number of pages 3 including top.
Concerne Betrifft / Subject	Réf. Danny Diaz

Danny Diaz,

PR 0680

1, Esplanade du Mont-Blanc, 2001 Neuchâtel / Switzerland, Tél. (41-38) 24 00 24, Fax (41-38) 24 78 94

Remington

REMINGTON ARMS COMPANY, INC.
14 HOPKINS AVE.
ILION, NEW YORK 13357
TEL: 315 895-3279
FAX: 315 895-3015

K.H. Rensi
Vice President

TO: Robert Haskin

FROM: Sam Rensi

DATE: June 16, 1995

SUBJECT: Centerfire Rifle Accuracy

In an effort to focus on those things that effect Centerfire Rifle accuracy, we assembled the expert rifle personnel at the Ilion site for a discussion to identify processes, design characteristics, materials, function, tolerances, et. al. – things that, if improved, would (all else being equal) guarantee improved accuracy. The attached note is the result of that meeting, and represents things we can do for the 1996 model year. Most of the items do not require capital investment.

Without knowing what Steve Bishop has planned for the project, we may want to consider building several Super 700's E.G.; 700 built with the attached for testing purposes against a control group. I am encouraged that the level of effort required for a step change in performance may be more a function of manufacturing discipline, process control, and minor design changes as opposed to an accuracy breakthrough.

Please contact me when you feel it appropriate to discuss this matter.

SR/car

Attachment

cc: S. Bishop
R. Jackson
B. Orf

Danny Diaz

I hope you can read this.

See you soon.

Tom

PR 0681

Remington Arms Co. Inc.
Ilion, NY 13357

Date: 6/15/95

TO: [illegible]

From: Bob Ott RJO

Re: Memo from Tony Hancock on accuracy dated 5/26/95

I called a meeting with the following people to discuss what could be done to enhance accuracy in our current 700.

T. McCormack
F. Martin
R. Jackson
J. Kast
J. Hennings

The following are the suggestions of the meeting members.

- Improve bore finish. This could mean a new process like ball sizing or running the GFM's slower.
- Develop torque settings for the front and rear take down screws on the receiver. Along with this it was suggested that maybe we use a quick setting epoxy in the recoil lug slot and under the front of the receiver to hold the assembly.
- Reduce the amount of free bore on all calibers.
- Lengthen the barrel hub and thereby increase the engagement between the barrel and receiver much like we had on the M/788. This model shot very well, even better than the current M/700.
- Change the barrel contour. Make the barrel stiffer.
- Reduce lock time.
- Design a "V" block holding system for the front barrel pad. This could be held in position by the front sling swivel stud. This would be a more positive locator and would keep the barrel on center.
- Eliminate the possibility for the bullets to become deformed in the magazine box during shooting. Currently the rounds slap the front and rear for the box during shooting. This causes soft point bullets to become deformed and affects the accuracy. It was suggested that the box have lips in it that would stop the cartridge on the shoulder of the round rather than the nose of the bullet.
- Improve chambering. Concentricity and line. Use one pc reamers for throat, neck and body.

PR 0682

REMINGTON ARMS COMPANY, INC.

CONFIDENTIAL

August 24, 1995

TO: ROBERT W. HASKIN, JR.

FROM: JAY BUNTING JMB

MODEL 700 DEMARCATION (new firecontrol)

At the R&D Review several weeks ago, Bard Howe made it clear that the 1996 Model 700 with new trigger assembly should be demarked.

Marketing has been wrestling with this challenge ever since. It is most likely that no other improvements to the gun will be available for introduction in January of 1996. Features such as improved lock time, tolerance reductions with the chamber and free bore, improvements with bore and rifle finish and improved bedding will not be available because design is incomplete and testing has yet to be performed. Given these circumstances, there is nothing to sell with the new 700 other than a non adjustable performance tuned trigger. It would be my preference therefore to physically identify all 1996 Model 700's with new serial number blocks. Descriptions in the 1996 catalog could be slightly modified to demark the 700 from previous product. For example:

- The Model 700 ADL becomes the Model 700 A.
- The Model 700 BDL becomes the Model 700 B.
- The Model 700 VS becomes the Model 700 V.
- The Model 700 MTN DM becomes the Model 700 MDM.

PR 0686

I would prefer to use these suttle name changes rather than tag the Model 700 with another acronym such as "AE", "X" or "I".

Please provide an opinion as to the acceptability of moving forward in the recommended manner. Should more complete demarcation be required on both the product and sales literature, a new course of action will be immediately required.

Your input on this issue is most appreciated.

Jay: I agree - keep it low key. Rick 9.1.95

JMB:rsh:m700dem.doc

Subject: Remington Safet
From: maggs@scs.unr.edu (Kevin J. Maggs)
Date: 19 Sep 1995 12:33:58 -0400
Message-ID: <43mrdm$4an@xring.cs.umd.edu>

Just noticed an interesting transitory condition with the safety on my Rem. 700. I have the VS model with a 24" barrel, Everything is stock as far as I know. I had finished cleaning it the other day and was working the action. Just happened to have the safety on, touched the trigger, when I released the safety the hammer fell. Tried it again and it did it about twenty times in a row. Tried to demonstrate this to my SO the next day and everything was fine. Seems I've heard of faulty 700 safeties on R.G. before, anyone have any comments? The gun has about 250 rnds through it. Thanks for your time.
Kevin

Subject: Re: Remington S ty = "Murder Safety"
From: dkenny@ix.netcom.com (Don Kenny)
Date: 19 Sep 1995 15:42:12 -0400
Message-ID: <43n6ek$516@xring.cs.umd.edu>

In <43mrdm$4an@xring.cs.umd.edu> maggs@scs.unr.edu (Kevin J. Maggs) writes:
#
#Just noticed an interesting transitory condition with the safety on
#my Rem 700. Just happened to have the safety on, touched the trigger,
#when I released the safety the hammer fell.
<snip>

This is known as the Remington "murder safety".

I don't know why Remington refuses to fix the problem. Note that Jeff Cooper once shot a game animal in Africa this way, as he eased his safety off. Fortunately, his sights were lined up.

Shoot Straight!
- Don Kenny (dkenny@ix.netcom.com)
"Society Is Safer When Criminals Don't Know Who's Armed"

Subject: Re: Remington S. ety = "Murder Safety"
From: curry@kuhub.cc.ukans.edu
Date: 20 Sep 1995 17:27:45 -0400
Message-ID: <43q10h$bml@xring.cs.umd.edu>

In article <43n6ek$516@xring.cs.umd.edu>, dkenny@ix.netcom.com (Don Kenny) writes:
In <43mrdm$4an@xring.cs.umd.edu> maggs@scs.unr.edu (Kevin J. Maggs)
writes:
# #
#Just noticed an interesting transitory condition with the safety on
#my Rem 700. Just happened to have the safety on, touched the trigger,
#when I released the safety the hammer fell.
<snip>
#
#
This is known as the Remington "murder safety".
#
I don't know why Remington refuses to fix the problem.

I don't know either. All they would have to do is get rid of their fine 3-way adjustable trigger and replace it with a "lawyer special" the way nearly everyone else has done.

Preaching aside, all you need to do to fix the problem is increase the sear engagement. This is controlled by a screw on the rear of the trigger housing. It comes from the factory covered with a glob of some sort of sealer. There is a hole through the housing which lets you see where the trigger and sear meet. As I recall, you have to turn the screw in to encrease the engagement. Reseal the screw with a drop of epoxy when you get it right.
It would also be possible to adjust the safety itself so as to fix the problem without altering the sear engagement, but that is a job for an expert.

Bob Curry

Subject: Rem 700-IS THE IGGER ADJUSTABLE?
From: jgfong@ucdavis.edu (John Fong)
Date: 24 Sep 1995 14:53:53 -0400
Message-ID: <4449g1$q3m@xring.cs.umd.edu>

Hello All

I purchased a Remington 700 and a friend informed me that I can adjust tribber pull weight and travel as well. Is this possible? He didn't tell me how to accomplish this. Please tell me if the trigger is alterable and how I can do it. Thank you, John.

Subject: Re: Remington S ety = "Murder Safety"
From: lbernard@solar.rtd.utk.edu (Lance Bernard)
Date: 24 Sep 1995 14:12:48 -0400
Message-ID: <444730$pee@xring.cs.umd.edu>

Curtis Quist (cbq@glenqcy.glenayre.com) wrote:

: ## I don't know why Remington refuses to fix the problem.

: #I don't know either. All they would have to do is get rid of their fine
: #3-way adjustable trigger and replace it with a "lawyer special" the way
: #nearly everyone else has done.

: The reason being they probably are worried about law suites if they do. If
a
: change is made, then they basically are saying that the old one didn't work
: properly or didn't work at all. This is the case with the old single engine
: planes and why the engines were never changed was because they would admit
: fault by changing it.

My father is an airplane mechanic who works exclusively on small planes, and he confirms that this is precisely correct, if obscurely worded. E.g., the carburetor technology is straight out of the 40's on most small planes, but any factory change or factory recommendation of a retrofit will result in charges of prior lack of safe design, and many expensive lawsuits.

The (wonderfully!) now-former Democrat representative Marilyn Lloyd got her start in politics with a $200-$250K settlement she got from a propellor manufacturer whose product failed while her husband was flying his plane. Forget that he shortened the prop's blades in full knowledge that the manufacturer had explicitly warned him that doing so would reduce the prop's strength overall. Forget that he fitted it to a new engine with better than 50% greater power than the prop was originally rated for. It all came to rest on the manufacturer when the day was done. This really is sad, particularly when you consider that she was no friend of gun owners, and never saw a gun control bill she didn't like.
and v

Subject: Re: Remington S ety = "Murder Safety"
From: Lloyd.Gully@bigbend.com (Lloyd Gully)
Date: 24 Sep 1995 14:28:17 -0400
Message-ID: <444801$plt@xring.cs.umd.edu>

Besides all that, I HAVE known a couple of Remington 700's to fire when the safety was flicked to the "off" position. Of course I have had a Ruger M77 MkII do the same thing and it's about as foolproof a safety as I have seen. It was due to a "drop in" adjustable trigger - - maybe the Remingtons were too. They weren't mine so I never found out what the root causes were.

--- Maximus 2.02

Subject: Re: Remington S ety = "Murder Safety"
From: keane@bigdog.engr.arizona.edu (James Keane)
Date: 24 Sep 1995 14:28:34 -0400
Message-ID: <44480i$pm9@xring.cs.umd.edu>

Lloyd Wiebe (lwiebe@netcom.com) wrote:
: # Actually, I imagine a good portion of the problem could be
: #fixed by replacing their lever safety with a switch or push button
: #one. I like Rem 700's a great deal, but I don't trust the safeties.
: #Not because they fire when I flip them off, but because the flip
: #themselves off whenever I carry the rifle slung. I think the safety
: #catches on my jeans and switches off. In any case, knowing that the
: #loaded rifle on your back may or may not be on safe is not a good
: #feeling.

: Not to belabor a point, but isn't one of the big rules for safety to
: always assume in your actions that the firearm you are touching is loaded
: and ready to fire??? This would mean to me that the gun, wherever I'm
: carrying it is ready to go off... NB. This means I should be very very
: careful with it and where I point it, etc. Or am I out to lunch?

You're correct up to a point. If one takes that point too far, though, one could argue that there's no point at all in having a safety on a firearm. A safety should not be completely relied upon, but it does serve a purpose -- to make the firearm more safe. A safety that fails in that function is just cause, I believe, for concern.

Regards,

J. Sean Keane

Subject: Re: Remington S ety = "Murder Safety"
From: hotrodss@aol.com (Hotrod SS)
Date: 24 Sep 1995 14:28:45 -0400
Message-ID: <44480t$pmi@xring.cs.umd.edu>

In article <43t14p$hnn@xring.cs.umd.edu>, cbq@glenqcy.glenayre.com (Curtis Quist) writes:
#In article <43q10h$bml@xring.cs.umd.edu> curry@kuhub.cc.ukans.edu writes:
##In article <43n6ek$516@xring.cs.umd.edu>, dkenny@ix.netcom.com (Don Kenny)
#writes:># In <43mrdm$4an@xring.cs.umd.edu> maggs@scs.unr.edu (Kevin J. Maggs)
writes:
#
#Just noticed an interesting transitory condition with the safety on
#my Rem 700. Just happened to have the safety on, touched the trigger,
#when I released the safety the hammer fell.
<snip>
###
This is known as the Remington "murder safety".
###
I don't know why Remington refuses to fix the problem.
#
##I don't know either. All they would have to do is get rid of their fine
##3-way adjustable trigger and replace it with a "lawyer special" the way
##nearly everyone else has done.
#
#The reason being they probably are worried about law suites if they do. If a
#change is made, then they basically are saying that the old one didn't work
#properly or didn't work at all. This is the case with the old single engine
#planes and why the engines were never changed was because they would admit
#fault by changing it.

Subsequent remedial measures are inadmissible as evidence of negligence under most state rules of evidence and in all federal courts. If they were admissible, products would never be upgraded when new features were developed. This is an important issue in firearms-based product liability cases. Look at Ruger, for example, which will upgrade older single-action revolvers with a transfer-bar safety for the current owners. Notice, too, that Ruger now sells revolvers with safety warnings stamped on the barrel. Why would Ruger do such things if the management was afraid of being sued for once making a "safe" product that is now considered dangerous without the upgrade?

As other rec.gunners pointed out, this is a cost issue, an engineering problem, or a customer service problem. It is most definitely not a liability problem if Remington were to upgrade these rifles or change their production methods to something considered safer. On the contrary,

if they don't upgrade ri es that are commonly know o have a dangerous defect, Remington could have punitive damages awarded against it the next time some idiot blows his foot off.

Scott Hattrup
hotrodss@aol.com

Balio, John R.

From: Sachse, Nick
To: Balio, John R.
Cc: Chisnall, John H.; Evernham, Mike B.; O'neill, Andrew T.
Subject: In-Line Muzzleloader Instruction Book
Date: Friday, October 06, 1995 11:04AM

Everyone,

The following documents combined make up the first draft of the Instruction Book for the new In-Line Muzzleloader. Please critique and offer input no later than Friday, Oct. 13 th, so I can continue on schedule with the publishing of this document.

Thanks,

Nick Sachse

<<File Attachment: MANUAL.DOC>><<File Attachment: MLBOOK.DOC>><<File Attachment: MLCLNG.DOC>>
<<File Attachment: BACKPG.DOC>><<File Attachment: COVER.DOC>><<File Attachment: PARTS_.DOC>>

SAFETY RULES AND INFORMATION

WARNING
READ THESE BASIC SAFETY RULES. Learn how to handle your firearm safely. Failure to read, understand and obey these rules can result in serious personal injuries. Only you can prevent accidents.

KNOW YOUR FIREARM. To use it correctly and safely, read and follow the instructions in the enclosed firearm safety booklet and this instruction book. Copies are available free on request from Remington Arms Company, Inc.

TREAT EVERY FIREARM AS IF IT WERE LOADED. Don't rely on the safety switch. Use it as shown in this book. Even when the safety switch is engaged, careless handling can cause the firearm to fire. The safety switch may not actually be engaged; the internal mechanism may be altered, disabled, or broken; or the safety switch may have become disengaged by careless handling of the firearm.

NEVER MAKE ADJUSTMENTS. Do not make changes or alterations to any parts of the firearm. Use only Remington parts. Never make changes to the trigger, the shape or size of the sear, sear notch or other parts.

WATCH YOUR MUZZLE. Always keep the firearm pointed in a safe direction.

LOAD YOUR FIREARM SAFELY. Never load a firearm until you are in a location where it is safe to shoot.

KNOW OUR TARGET. Before you pull the trigger, make sure you can see the target clearly, and the path of the projectile beyond the target.

KNOW THE RANGE OF YOUR FIREARM. Muzzleloading projectiles have a range of more than one-half mile.

RENDER YOUR FIREARM INOPERABLE WHENEVER YOU ARE NOT SHOOTING. Never carry or store a loaded firearm in a building or a vehicle. Open the breech and remove the percussion cap before crossing or climbing up or down any obstacle that may prevent you from keeping full control over the firearm, such as a fallen tree, fence, tree stand, or slippery area.

STORE YOUR FIREARM SAFELY. Keep firearms and ammunition away from children. Lock unloaded firearms and ammunition securely in separate locations.

USE BLACK POWDER OR PYRODEX ONLY. Never use even small amounts of smokeless powder (modern gun powder). Under no circumstances should any powder other than black powder or PYRODEX be used in a muzzleloader. Use of any other propellant may cause serious injury to the shooter and damage to the firearm. See the section on black powder and PYRODEX in this booklet.

NEVER USE THE WRONG AMMUNITION. Only use ammunition that exactly matches the caliber markings on your firearm.

BLACK POWDER OR PYRODEX SHOULD BE STORED IN THE ORIGINAL MANUFACTURERS CONTAINER. Read and follow the manufacturer's procedures printed on the original container. Keep the container away from heat sources.

MAKE SURE ALL SPECTATORS ARE COMPLETELY BEHIND YOU WHEN FIRING. This will ensure they are clear of the shot path and clear of any sparks or percussion cap fragments emitting from the firearm.

BLACK POWDER LEAVES HEAVY CORROSIVE RESIDUES, after firing a PROMPT AND THOROUGH BORE CLEANING IS AN ABSOLUTE NECESSITY BEFORE STORAGE to avoid rust formation and ease loading.

USE ONLY NON-SYNTHETIC CLOTH PATCHING. Synthetic patching could build up a static electric charge in the barrel possibly creating a spark that could ignite the powder.

PROTECT YOUR EYES from sparks and percussion cap fragments by wearing shatter-proof glasses when firing your muzzleloader.

PROTECT YOUR EARS by using ear plugs or muffs when firing your muzzleloader. Repeated exposure to shooting noise without protection can cause permanent hearing loss.

NEVER FIRE AT WATER, FLAT OR HARD SURFACES. The projectile may glance off such surfaces and cause injuries.

ALWAYS CHECK THE BARREL FOR OBSTRUCTIONS PRIOR TO LOADING AND FIRING. Water, snow, or any other materials can obstruct the barrel and cause barrel damage.

CHECK AND CLEAR THE FLASHHOLE THROUGH THE NIPPLE PRIOR TO SHOOTING.

TREAT A MISFIRE OR FAILURE TO FIRE WITH EXTREME CARE. Keep the rifle pointed in a safe direction and wait at least one full minute before opening

the breech. There is always the chance a spark is smoldering in the powder and the RIFLE COULD FIRE AT ANY MOMENT. The percussion cap may have actually sent a spark into the powder without any detectable sound of it's ever firing. If the rifle does fire within a minute, this is referred to as a hangfire. Read how to handle a misfire and hangfire in the loading and shooting notes section of this book.

BE PREPARED FOR A HANGFIRE. Unlike a misfire where the rifle never fires at all regardless of whether or not the percussion cap fires, with a hangfire, the rifle DOES FIRE UP TO SEVERAL SECONDS AFTER THE PERCUSSION CAP FIRES. The percussion cap may have actually sent a spark into the powder without any detectable sound of it's ever firing. Keep the rifle pointed in a safe direction after pulling the trigger and be prepared for the rifle to fire at any moment.

MAKE SURE YOUR RIFLE IS IN FIRING CONDITION BEFORE YOU PULL THE TRIGGER. An external inspection of the firearm should be performed before firing.

NEVER POUR POWDER INTO THE BORE DIRECTLY FROM A POWDER FLASK OR CONTAINER. A sudden powder ignition from a lingering spark could cause the entire flask to explode. Instead, use an individual charge from a powder measure when loading your rifle.

NEVER EXCEED THE RECOMMENDED MAXIMUM POWDER CHARGE CONTAINED IN THIS MANUAL. To do so could result in injury or death to the shooter or bystanders.

BE CERTAIN THAT POWDER, PATCHES, AND PROJECTILES ARE LOADED IN THEIR PROPER SEQUENCE AND THAT THEY ARE SEATED FIRMLY ON TOP OF ONE ANOTHER.

NEVER ATTEMPT TO SHOOT OUT A PROJECTILE WHICH IS NOT FIRMLY SEATED AGAINST THE POWDER CHARGE. Any air space between the powder and the projectile could cause serious damage to the firearm and injury to the shooter and bystanders. A reference mark on the ramrod at the tip of the muzzle with the ramrod resting on a properly seated charge will ensure that all future projectiles are seated to the proper depth. **Note: This reference mark location on the ramrod must be changed accordingly whenever you change the charge weight or any loading components, or add or remove attachments, to or from, the ramrod. See picture ?.**

BE SURE THAT THE RIFLE IS UNLOADED. There is a simple way to check it. With an empty barrel run the ramrod to the breech plug and note it's location relative to the muzzle. It should be approximately 1/4 inch below flush with the

end of the barrel if the rifle is not loaded. **Note: Nothing must be attached to the ramrod while using it in this way to make sure that the rifle is unloaded. See picture ?.**

NEVER BRING A LOADED FIREARM INTO A BUILDING OR VEHICLE.

NEVER DRINK ALCOHOLIC BEVERAGES OR TAKE ANY KIND OF DRUGS BEFORE OR WHILE SHOOTING, THAT COULD ADVERSELY AFFECT YOUR ABILITY TO HANDLE THE FIREARM IN A SAFE MANNER.

NEVER SMOKE WHILE HANDLING BLACK POWDER OR PYRODEX.

IF YOU SELL, TRADE, OR GIVE THIS FIREARM TO ANOTHER PERSON, MAKE SURE THAT YOU GIVE THEM THIS BOOK, OR AT LEAST INFORM THEM THAT A COPY IS AVAILABLE AT NO CHARGE FROM REMINGTON.

UNDER NO CIRCUMSTANCES SHOULD THE INDIVIDUAL ATTEMPT TO REMOVE THE FIRE CONTROL ASSEMBLY OR THE BARREL FROM THE RECEIVER. THIS WORK MUST BE DONE AT THE REMINGTON FACTORY ONLY.

WARNING: Discharging firearms in poorly ventilated areas, cleaning firearms, or handling ammunition may result in exposure to lead, a substance known to cause birth defects, reproductive harm, and other serious physical injury. Have adequate ventilation at all times. Wash hands thoroughly after exposure.

BEFORE LOADING MAKE SURE THE FIREARM IS NOT ALREADY LOADED.

Use only pure lead when casting projectiles. Do not use lead alloys that contain materials like antimony. These projectiles will be too hard for proper and safe functioning in your muzzleloader.

Always carry loading and cleaning equipment with you in the field.

CONSULT WITH A COMPETENT FIREARMS INSTRUCTOR TO CLARIFY ANY INSTRUCTIONS OR TERMINOLOGY THAT YOU MIGHT NOT UNDERSTAND ~~OR WRITE TO US (See page ? for address).~~

THINK SAFETY AT ALL TIMES.

REMOVING A CHARGE (UNLOADING)

Under normal conditions a muzzleloading firearm is unloaded by simply firing it into a safe and suitable backstop. There are however three most common conditions which may occur that will require the projectile to be removed from the barrel manually. These are:

1. A misfire or failure to fire.
2. Powder fouling or other circumstances cause the projectile to become lodged in the bore, partially down the barrel after firing.
3. The projectile is not firmly seated against the powder charge, and cannot be made to do so using normal ramrod pressure for seating the projectile.

If any of these situations arise, the projectile must be removed from the barrel using one of the following two methods.

WARNING: FOR A MISFIRE OR FAILURE TO FIRE, WAIT AT LEAST ONE MINUTE WITH THE RIFLE POINTED IN A SAFE DIRECTION . There is always a chance that a spark is smoldering in the powder and that THE RIFLE COULD FIRE AT ANY MOMENT.

NEVER ATTEMPT TO PULL A CHARGE UNTIL THE POWDER HAS BEEN RENDERED INERT (DEACTIVATED).

Method one (primary method)

1. Keeping the muzzle pointed in a safe direction, remove the percussion cap from the nipple.
2. Remove the bolt assembly. See instructions on Page ?.
3. Turn the rifle upside down.
4. Remove the three screws necessary to remove the barreled action from the stock. See Picture?.
5. Use a nipple pick to clear the nipple.
6. Submerge the action in a pail of water, muzzle up, (hot if possible) **for 30 minutes, minimum.** Ensure that the breech section of the action is submerged to a depth of at least 12 inches so that water can saturate the powder charge through the nipple. Also pour water down the muzzle such that it is level with the muzzle. This will render the powder charge inert (deactivated), and soften powder fouling.
7. Remove the action from the water and pour the water from the muzzle.

8. Remove the breech plug. See instructions on Page ?.
9. Insert the ramrod, with extension and handle, from the muzzle, and push the projectile, along with any remaining saturated powder, through the breech.
10. Clean the bore, barrel, and parts as explained in the cleaning instructions of this manual. Pay particular attention to the instructions on oiling the trigger assembly thoroughly with Rem Oil.
11. Reassemble the firearm.

NOTE: POWDER MUST REMAIN SATURATED. If you must remove the rifle to another area, or there is a any delay between step 6 and completion of the procedure, you must repeat step 5.

Method two (alternate method)

1. Keeping the muzzle pointed in a safe direction, remove the percussion cap from the nipple.
2. Remove the bolt assembly. See instructions on Page ?.
3. Turn the rifle upside down.
4. Remove the three screws required to remove the barreled action from the stock. See Picture ?.
5. Use a nipple pick to clear the nipple.
6. Submerge the action in a pail of water, muzzle up, (hot if possible) **for 30 minutes, minimum**. Ensure that the breech section of the action is submerged to a depth of at least 12 inches so that water can saturate the powder charge through the nipple. Also pour water down the muzzle such that it is level with the muzzle. This will render the powder charge inert (deactivated), and soften powder fouling.
7. Remove the action from the water and pour the water from the muzzle.
8. Attach a screw type bullet puller to the ramrod.
9. Insert the ramrod with attached bullet puller into the muzzle.
10. Twist the bullet puller into the bullet
NOTE: Considerable force may be necessary to engage the bullet puller deep into the bullet.
11. Pull the projectile out from the muzzle once the bullet puller is deep into the bullet.
12. Wash remaining saturated powder from the barrel.
~~13. Clean the bore, barrel, and parts as explained in the cleaning instructions of~~ this manual. Pay particular attention to the instructions on oiling the trigger assembly thoroughly with Rem Oil.
14. Reassemble the firearm.

NOTE: POWDER MUST REMAIN SATURATED. If you must remove the rifle to another area, or there is a any delay between step 6 and completion of the procedure, you must repeat step 5.

HOW TO ORDER PARTS AND REPAIR SERVICE FROM THE REMINGTON FACTORY

TO ORDER FACTORY SERVICE:

1. Write a short description of the problem and include the model number, serial number, and daytime telephone number.
2. Make copies of this note. Attach one to the firearm, and put another in an envelope attached to the outside of the shipping box.

WARNING: MAKE SURE THE FIREARM IS UNLOADED. NEVER INCLUDE ANY AMMUNITION IN THE PACKAGE WITH THE FIREARM.

3. Send by either United Parcel Service or Parcel Post.
4. Get insurance for the firearm.
5. Record the serial number. It is required when calling the factory to inquire if the firearm has been received for repairs.
6. Send firearms for factory service to:

Arms Service Division
Remington Arms Company, Inc.
Ilion, New York 13357-1888

Service Department: (315) 895-7791
Service Department Fax: (315) 895-3659

INSTRUCTION BOOKS AND GUNSMITH LIST:

To get an instruction book for any Remington firearm, a firearms safety booklet, and a list of recommended gunsmiths, write to:

Remington Arms Company, Inc.
~~Arms Service Division~~
Ilion, New York 13357-1888

Give the model, serial number, and caliber.

TO ORDER PARTS:

NOTE: Many Remington dealers carry a full line of parts.

1. Use the information on pages ? and ? to find the correct part name and number.
2. Write the model and serial number of your firearm and the part name and number on the parts order.
3. Send or fax parts order to:

Arms Service Division
Remington Arms Company, Inc.
Ilion, New York 13357-1888

Parts Department: (315) 895-7493
Parts Department Fax: (315) 895-3659

4. When calling an order in, please have your Visa or Mastercard ready. If you wish to pre-pay by check or money order, and exact quote will be given to you over the phone.
5. Sorry, no C.O.D.'s.

WARNING: Use only Remington parts in Remington firearms.

IMPORTANT PARTS OF THE FIREARM

THE SAFETY SWITCH

The safety switch provides protection against accidental or unintentional discharge under normal usage when properly engaged and in good working order.

To engage the safety switch, put the switch in the 'S' position. See Picture ?.

Always put the switch in the 'S' position before handling, loading or unloading the firearm.

When you are ready to fire the firearm, put the safety switch in the 'F' position to disengage the safety switch. See Picture ?.

WARNING: Do not touch the trigger while moving the safety switch.

Never pull the trigger when the safety switch is in the 'S' position.

WARNING: The firearm will fire when the trigger is pulled and the safety switch is in the 'F' position.

Even when the safety switch is in the 'S' position, careless handling can cause the firearm to fire. See Safety Rules on Page ?.

THE BOLT ASSEMBLY

The bolt assembly engages the firing pin with the sear prior to firing, and re-cocks the firing pin when the bolt is opened after firing.

TO INSTALL THE BOLT ASSEMBLY:

1. Point the firearm in a safe direction.
2. Put the safety switch in the 'S' position.
3. Remove the bolt stop screw from the receiver.
4. Slide the bolt assembly into the receiver and line up the firing pin head with the slot cut in the rear of the receiver. Also align the horizontal slot that is cut along the length of the bolt body with the hole for the bolt stop screw in the receiver. See Picture ?.
5. Install the bolt stop screw in the receiver and screw it all the way down snug so that the head of the screw is bottomed out in the counterbore and the end of the screw is riding inside the slot cut in the bolt body. Do not over-tighten.
6. Slide the bolt assembly fully forward in the receiver.

PR 0706

7. To place the bolt assembly in the closed, ready to fire, position, push the bolt handle down.

TO REMOVE THE BOLT ASSEMBLY:

1. Point the firearm in a safe direction.
2. Put the safety switch in the 'S' position.
3. Do not touch the trigger while moving the safety switch.
4. Raise the bolt handle to open the bolt.
5. Remove the bolt stop screw from the receiver. **Never attempt to remove the bolt stop screw with the bolt handle down.**
6. Slide the bolt out of the receiver.

THE TRIGGER ASSEMBLY:

Pulling the trigger fires the firearm.

The trigger is adjusted at the factory. All adjustments to the trigger must be made by the factory or a REMINGTON RECOMMENDED GUNSMITH.

WARNING: NEVER remove the trigger mechanism, or make adjustments to the trigger or trigger assembly.

WARNING: NEVER put your finger on the trigger unless you are going to fire the firearm.

THE BARREL:

The inside of the barrel must be clean and free of obstructions.

I. TO CHECK THE INSIDE OF THE BARREL:

1. Point the firearm in a safe direction.
2. Put the safety switch in the 'S' position.
3. Use the ramrod to make sure the firearm is not loaded and make sure there is not a percussion cap on the nipple. See instructions on Page ?.
4. Remove the bolt assembly. See instructions on Page ?.
5. Remove the breech plug. See instructions on Page ?.
6. Look through the inside of the barrel from the chamber end to the muzzle. See Picture 1.

II. TO REMOVE AN OBJECT FROM INSIDE THE BARREL:
(To remove a charge, see Removing A Charge, Page ?)

1. Use the ramrod with extension and handle.
2. With the breech plug removed, run the ramrod through the barrel from the chamber end to the muzzle to remove the object.
3. If an object can not be easily pushed from the barrel with the ramrod, return the firearm to the factory or a REMINGTON RECOMMENDED GUNSMITH.

WARNING: NEVER try to remove an object from the barrel by firing it out. This may cause serious damage to the firearm and injury to the shooter and bystanders.

III. TO CLEAN THE BARREL, FOLLOW INSTRUCTIONS SHOWN ON PAGE ?.

Before loading the rifle, make sure the inside of the barrel is free from dirt, fouling, or other residue.

THE BREECH PLUG:

TO INSTALL THE BREECH PLUG:

1. With a clean breech plug, rub some Remington Wonderlube generously onto the breech plug threads to ensure it's easy removal after shooting and to protect the threads of the breech plug and the barrel from the highly corrosive powder residues left from shooting black powder or PYRODEX. Failure to do this could cause the breech plug to be very difficult to remove after shooting. Avoid getting lube on the front face of the breech plug. This will foul the powder charge that comes in contact with it, increasing the chances of a misfire or hangfire.
2. With the bolt assembly and bolt stop screw removed, place the breech plug through the hole in the rear of the receiver where the bolt assembly goes with the hexagon wrench flats facing rearward. **If the nipple is in the breech plug when you are installing it, make sure there is no percussion cap on the nipple.**
3. Slide the breech plug through the receiver until it stops on the threads in the rear of the barrel.
4. Use the hexagon end of the combination wrench provided or a standard 7/16 inch socket with long extension to thread the breech plug into the rear of the barrel. Start it by hand at first to ensure it is not cross-threaded.
5. Make sure the breech plug is tightened down snug and the back face of the hexagon wrench flats is flush with the front edge of the ejection port in the receiver. Do not over-tighten the breech plug as this is unnecessary and will only make it harder to remove. See Picture ?.
6. If the breech plug will not thread in smoothly and tighten down snug with the back face of the hexagon wrench flats flush with the front edge of the ejection port in the receiver, DO NOT ATTEMPT TO FIRE THE RIFLE.

THE BREECH PLUG MUST BE ALL THE WAY IN THE BARREL TO ENSURE THE PROPER AND SAFE OPERATION OF THE FIREARM. Return the firearm to the factory or a REMINGTON RECOMMENDED GUNSMITH.

TO REMOVE THE BREECH PLUG:

1. Point the firearm in a safe direction.
2. Put the safety switch in the 'S' position.
3. Raise the bolt handle to open the bolt.
4. Make sure there is no percussion cap on the nipple and use the ramrod to ensure the firearm is not loaded. See instructions on Page ?.
5. Remove the bolt assembly and bolt stop screw.
6. Use the hexagon end of the combination wrench provided or a standard 7/16 inch socket with long extension to remove the breech plug from the barrel. **If the nipple is in the breech plug as you are removing it, make sure there is no percussion cap on the nipple.**
7. If the breech plug can not be removed with reasonable force using a 7/16 inch socket with extension, return the firearm to the factory or a REMINGTON RECOMMENDED GUNSMITH.

THE NIPPLE:

TO INSTALL THE NIPPLE:

1. With a clean nipple, rub some Remington Wonderlube onto the threads of the the nipple to ensure it's easy removal after shooting and to protect it from the highly corrosive powder residues left from shooting black powder or PYRODEX. Avoid getting lube on the front face of the nipple. This will foul the powder charge that comes in contact with it, increasing the chances of a misfire or hangfire.
2. With the breech plug installed and the bolt stop screw and bolt assembly removed, use the combination wrench to install the nipple in the back of the breech plug. Start it by hand at first to ensure it is not cross-threaded. Be sure the nipple is threaded in all the way. Scribe a mark on the nipple wrench flats flush with the face of the breech plug to use as a future reference for checking to be sure the nipple is threaded in all the way. Do not over-tighten the nipple as this is unnecessary and will only make it harder to remove. See Picture ?.
   Never attempt to install the nipple with a percussion cap on it.
3. If the nipple will not thread in smoothly all the way, DO NOT ATTEMPT TO FIRE THE RIFLE. THE NIPPLE MUST BE THREADED ALL THE WAY IN THE BREECH PLUG TO INSURE THE PROPER AND SAFE OPERATION OF THE FIREARM. Return the firearm to the factory or a REMINGTON RECOMMENDED GUNSMITH.

TO REMOVE THE NIPPLE:

1. Point the firearm in a safe direction.
2. Put the safety switch in the 'S' position.
3. Raise the bolt handle to open the bolt.
4. Make sure there is no percussion cap on the nipple and use the ramrod to ensure the firearm is not loaded. See instructions on Page ?.
5. Remove the bolt assembly and bolt stop screw.
6. Use the combination wrench to remove the nipple from the breech plug. **Never attempt to remove the nipple with a percussion cap on it.**
7. If the breech plug turns and starts to back out when attempting to remove the nipple, use the combination wrench or standard 7/16 inch socket with long extension to tighten the breech plug in the barrel to keep it from turning while removing the nipple.
8. If the nipple can not be removed with reasonable force using the combination wrench, return the firearm to the factory or a RECOMMENDED REMINGTON GUNSMITH.

LOADING AND SHOOTING NOTES

USE BLACK POWDER OR PYRODEX ONLY. Never use even small amounts of smokeless powder (modern gunpowder). Under no circumstances should any powder other than black powder or PYRODEX be used in a muzzleloader. Use of any other propellant may cause serious injury to the shooter and bystanders and damage to the firearm.

BLACK POWDER AND PYRODEX:

Black powder is the term used to designate that type of powder that is safe to use in muzzleloading firearms and black powder cartridge firearms and does not mean that it is the only powder made that is black in color. **Some modern smokeless gun powders that are designed to be used only in modern centerfire cartridges and shotgun shells are black in color. Be sure to positively identify the powder to be used in muzzleloading firearms by the name and not by the color.**

PYRODEX is a black powder replica that is intended for use in percussion type muzzleloading firearms and black powder cartridge firearms and is the only black powder replica that is safe to use in this muzzleloading rifle. It is intended to be used on a volume-to-volume basis with black powder and not on a weight-to-weight basis and will produce approximately the same velocities and pressures as the equivalent volume of the appropriate granulation of black powder when used this way. Thus, a powder measurer that is set to measure 100 grains of powder when filled with black powder will actually only contain approximately 80 grains of powder when filled with PYRODEX. The two volumes of powder are the same however, and will produce similar ballistic results.

The use of any quantity of smokeless gun powder will produce extremely dangerous high pressures which could result in serious injury to the shooter and bystanders and damage to the firearm.

Black powder is available in four degrees of granulation size, which are identified by a series of "F's" marked on the container.

1F or Fg - Has the coarsest granulation and is mostly suitable for extremely large calibers and scale model cannons.

2F or FFg - Having less course granulation, it is used in guns .45 caliber or larger and is a very popular powder. **This is the granulation recommended for use in this muzzleloading rifle.**

3F or FFFg - Having even finer granulation, it is used for revolvers and rifles under .45 caliber.

4F or FFFFg - Has the finest granulation and is typically only used in pistols of .31 caliber or smaller and as a pan priming charge for flintlock style muzzleloading firearms.

PYRODEX is available in two designations which are identified by an "RS" or "P" on the container.

PYRODEX RS - Stands for Rifle and Shotgun powder and is designed for use in all calibers of percussion type muzzleloading rifles and shotguns. **This is the designation recommended for use in this muzzleloading rifle.**

PYRODEX P - Stands for Pistol powder and is designed for use in percussion muzzleloading pistols and revolvers.

SELECTING THE PROPELLANT:

WARNING: Only 2F or FFg black powder or PYRODEX RS should be used in this rifle. Never use any amount of modern smokeless powder or any other granulation or designation of powder.

Never exceed the maximum quantity of powder that is designated for a particular projectile in the loading chart on Page ?.

SELECTING THE PROJECTILE:

NOTE: It is highly recommended for maximum safety and best performance, only Remington brand loading components made to Remington's exacting high standards, be used in this Remington Model 700 ML muzzleloading rifle. If, however, it is desired to use something other than Remington brand loading components, and there is any question as to the safe performance of any or all of the components desired to be used, please contact Remington Consumer Information at ???-???-???? before attempting to use the product.

WARNING: With the exception of the sabot and cloth patch, the Remington Wonder Wad (See Picture ?) is the only approved loading component to go between the projectile and powder. Never use a jacketed bullet without a sabot in this muzzleloading rifle. Only pure lead, lubed projectiles, specifically designed for muzzleloading, are meant to be used without a sabot. Never use synthetic patching or a sabot with a round ball, always use a non-synthetic cloth patch only. Never use any type of patching or sabot with a lubed conical. Always use lubricant with any projectile that is not being used with a sabot. Never use cloth patches with a conical projectile that is intended to be used with a sabot.
Be absolutely certain that loading components are used only as they were intended to be used and are compatible with the desired use and compatible to be used together.

There are three projectile types that can be fired safely and accurately in this Remington Model 700 ML muzzleloading rifle, they are the saboted conical, lubed conical, and the patched round ball. See Picture ?.

THE SABOTED CONICAL: With a saboted projectile, the sabot engages with the barrel rifling rather than the projectile itself to provide the spin necessary to stabilize the projectile in flight. It also holds the projectile stationary in the barrel, firmly seated on the powder charge. In addition, the sabot acts as a gas seal to seal off the bore and grooves in the barrel as the pressure builds up behind the projectile as it moves down the barrel. This keeps the gases from escaping around the projectile, adversely affecting velocity and accuracy. Thus, using a sabot allows for a projectile that is smaller in diameter (caliber) and lighter in weight than the standard projectile for a given caliber, to be fired in the larger caliber firearm. The result is a higher velocity, flatter shooting projectile.
The sabot is self lubricating, so there is no need to use additional lubrication when using saboted projectiles.

THE LUBED CONICAL: With a lubed conical, the projectile itself engages with the rifling to provide the spin necessary to stabilize the projectile in flight. It also holds itself stationary in the barrel, firmly seated down on the powder charge. When the powder is ignited behind the projectile, the gases produced from the burning of the powder act on the base of the projectile causing it to swell out to fill the grooves of the rifling in the barrel. This is called obturation and is what provides the gas seal behind the projectile when using a conical projectile without a sabot. This keeps the gases from escaping around the projectile, adversely affecting velocity and accuracy.

THE PATCHED ROUND BALL: With a patched round ball, the lubed cloth patch serves the same purpose as the sabot does with the conical bullet. It engages with the rifling to provide the spin necessary to stabilize the ball in flight. It also holds the ball stationary in the barrel, firmly seated down on the powder charge. The

patch also acts as a gas seal to seal off the bore and grooves in the barrel as the pressure builds up behind the projectile as it moves down the barrel. This keeps the gases from escaping around the projectile, adversely affecting velocity and accuracy.
The patch should be made of a non-synthetic material to avoid the possibility of building up a static electric charge in the barrel as the projectile is being seated on the powder charge which could create a spark and ignite the charge. The patch should also be well lubricated.

THE WONDER WAD: The wonder wad can be used with any of the three types of projectiles that can be used in this firearm. It is to be sandwiched between the powder and projectile in the barrel. It acts as a secondary gas seal, expanding to fill the bore and grooves in the barrel as the pressure builds up behind the wad and projectile. This helps improve velocity and accuracy by acting to reduce gas blow-by. In addition, the Wonder Wad helps to clean and lubricate the barrel as it is being loaded as well as on the way out of the barrel upon firing. This allows for more shots to be fired before the barrel must be cleaned.

LOADING THE POWDER AND PROJECTILE:

BEFORE LOADING MAKE SURE:
1. The firearm is pointed in a safe direction.
2. The safety switch is in the 'S' position. See instructions on Page ?.
3. The bolt assembly is in the raised or open position.
4. There is no percussion cap on the nipple.
5. The firearm is not already loaded. See instructions on Page ?.
6. The barrel is free from obstructions. See instructions on Page ?.
7. The breech plug is all the way in the barrel. See instructions on Page ?.
8. The nipple is all the way in the breech plug. See instructions on Page ?.
9. The flash hole through the nipple is clear.
10. The firearm is in good working order.
11. You are wearing protective clothing, ear, and eye protection.
12. You are in a place that is safe to shoot.

LOADING THE POWDER:
WARNING: Do not attempt to load the firearm until you have read and understand this book in it's entirety and all 12 of the conditions listed under "BEFORE LOADING MAKE SURE:" have been met.

1. Using the ramrod with extension handle and cleaning jag, swab the bore all the way to the breech plug with a cleaning patch that has been saturated with Remington All-Natural Bore Cleaner to remove any debris or fouling that may have accumulated in the bore while the rifle was in storage. Use short strokes up and down for best results.

2. Swab the bore with dry cleaning patches until the patches come out clean and dry.
3. Prepare the bore for loading by swabbing with a cleaning patch lubed with Remington Wonderlube.
4. Point the rifle in a safe direction and fire at least two percussion caps to make sure the flash hole through the nipple is clear and to dry the chamber area of any residual bore cleaner that could saturate the powder, increasing the chances of a misfire or hangfire. A good way to make sure the flash hole is clear is to insert the ramrod and cleaning jag with a clean, dry patch, down the barrel and let the patch rest on the face of the breech plug before firing the percussion caps. After firing the percussion caps, if the flash hole is clear, an inspection of the patch should reveal a black, charred spot, where the sparks contacted it. If the flash hole is not clear, use a nipple pick to clear it and fire another percussion cap with a clean patch to confirm it is clear before pouring the powder down the bore.
5. Wait at least one full minute since firing the last percussion cap before pouring the powder down the bore. This will allow time for any sparks that could be smoldering in the chamber area to be extinguished.
6. Place the butt of the rifle on a firm, stable surface with the muzzle pointed up and well away from your body. **Treat the firearm as if it could go off at any time.**
7. Use an individual powder measure to pour the correct amount of powder down the barrel from the muzzle. **Make sure you are using 2f or FFg black powder or PYRODEX RS only. Never use any quantity of any other powder. Never pour powder down the barrel from a powder flask or container. There could be a spark lingering in the barrel which could ignite the entire quantity of powder. Always use an individual charge measurer. Never exceed the maximum charge listed in this booklet.**
8. Keep the muzzle pointed up and away from your body to ensure the powder stays in the bottom of the barrel at all times.
9. Proceed to load the projectile.

LOADING THE PROJECTILE:

Loading the saboted conical:

WARNING: Do not attempt to load the firearm until you have read and understand ~~this book in it's entirety and all 12 of the conditions listed under "BEFORE FIRING~~ MAKE SURE:" have been met.
1. Keep the butt of the rifle on a firm, stable surface with the muzzle pointed up and away from your body. This is for safety and to ensure the powder stays in the bottom of the barrel at all times.
2. If it is desired to use the Remington Wonder Wad, place it evenly in the bore with the entire outer edge of the wad making contact with the inside of the barrel. Use a short starter to get the wad started down the barrel straight. If it is not desired to use the wad, proceed to step 3.

3. Firmly seat the projectile in the sabot and start the sabot with the projectile by hand, straight up and down in the barrel. See picture ?.
4. Use a short starter to get the projectile started down the barrel straight. Use the ball end of the short starter to get the projectile started in the barrel at the muzzle, then use the shaft of the short starter to seat the projectile approximately six inches down the barrel. See Picture ?.
5. Use the ramrod to seat the projectile and Wonder Wad if used, down firmly on the powder charge. **Do not pound on the ramrod to seat the projectile as black powder and PYRODEX is impact sensitive and could go off if pounded on.** This will also deform the projectile, adversely affecting accuracy.
6. Make sure the projectile is firmly seated all the way down on the powder such that no air space exists between the powder and the projectile. A good method to determine this is to mark the ramrod at the muzzle once the first projectile has been loaded to the proper depth. This can be used as a reference mark for future loadings. **Note: This mark location on the ramrod must be changed accordingly if you change powder charge weights or any loading components, or add or remove attachments, to or from, the ramrod.**

Loading the lubed conical:

WARNING: Do not attempt to load the firearm until you have read and understand this book in it's entirety and all 12 of the conditions listed under "BEFORE FIRING MAKE SURE:" have been met.
1. Keep the butt of the rifle on a firm, stable surface with the muzzle pointed up and away from your body. This is for safety and to ensure the powder stays in the bottom of the barrel at all times.
2. If it is desired to use the Remington Wonder Wad, place it evenly in the bore with the entire outer edge of the wad making contact with the inside of the barrel. Use a short starter to get the wad started down the barrel straight. If it is not desired to use the wad, proceed to step 3.
3. Start the lubricated projectile by hand, straight up and down in the barrel. See Picture ?.
4. Use a short starter to get the projectile started down the barrel straight. Use the ball end of the short starter to get the projectile started in the barrel at the muzzle, then use the shaft of the short starter to seat the projectile approximately six inches down the barrel. See Picture ?.
5. Use the ramrod to seat the projectile and Wonder Wad if used, down firmly on the powder charge. **Do not pound on the ramrod to seat the projectile as black powder and PYRODEX is impact sensitive and could go off if pounded on.** This will also deform the projectile, adversely affecting accuracy.
6. Make sure the projectile is firmly seated all the way down on the powder such that no air space exists between the powder and the projectile. A good method to determine this is to mark the ramrod at the muzzle once the first projectile has been loaded to the proper depth. This can be used as a reference mark for future loadings. **Note: This mark location on the ramrod must be changed**

accordingly if you change powder charge weights or any loading components, or add or remove attachments, to or from, the ramrod.

Loading the patched round ball:

WARNING: Do not attempt to load the firearm until you have read and understand this book in it's entirety and all 12 of the conditions listed under "BEFORE FIRING MAKE SURE:" have been met.

1. Keep the butt of the rifle on a firm, stable surface with the muzzle pointed up and away from your body. This is for safety and to ensure the powder stays in the bottom of the barrel at all times.
2. If it is desired to use the Remington Wonder Wad, place it evenly in the bore with the entire outer edge of the wad making contact with the inside of the barrel. Use a short starter to get the wad started down the barrel straight. If it is not desired to use the wad, proceed to step 3.
3. Lay a lubricated round ball patch evenly over the muzzle of the barrel and start the ball into the muzzle end of the barrel in the center of the patch by hand. See Picture ?.
4. Use a short starter to get the projectile started down the barrel straight. Use the ball end of the short starter to get the projectile started in the barrel at the muzzle, then use the shaft of the short starter to seat the projectile approximately six inches down the barrel. See Picture ?.
5. Use the ramrod to seat the projectile and Wonder Wad if used, down firmly on the powder charge. **Do not pound on the ramrod to seat the projectile as black powder and PYRODEX is impact sensitive and could go off if pounded on.** This will also deform the projectile, adversely affecting accuracy.
6. Make sure the projectile is firmly seated all the way down on the powder such that no air space exists between the powder and the projectile. A good method to determine this is to mark the ramrod at the muzzle once the first projectile has been loaded to the proper depth. This can be used as a reference mark for future loadings. **Note: This mark location on the ramrod must be changed accordingly if you change powder charge weights or any loading components, or add or remove attachments, to or from, the ramrod.**

PLACING THE PERCUSSION CAP ON THE NIPPLE:

1. Point the firearm in a safe direction.
2. Place the safety switch in the 'S' position.
3. Raise the bolt handle and slide the bolt assembly rearward.
4. Place a Number 11 percussion cap on the nipple by hand or by using a capper. Be sure the percussion cap is seated down on the nipple. See Picture ?.

NOW THE RIFLE IS LOADED!

5. Slide the bolt assembly forward and lower the bolt handle.
6. Aim at the target.
7. Put the safety switch in the 'F' position.

NOW THE RIFLE IS READY TO FIRE!

HOW TO HANDLE A MISFIRE AND HANGFIRE:
Normally a black powder percussion rifle fires the instant you pull the trigger. However if the powder and/or percussion cap gets a little damp, a hangfire or misfire may occur. A hangfire is when the rifle fires up to several seconds after the trigger is pulled. A misfire is when the rifle never fires at all after the trigger is pulled.

In the case of a misfire or hangfire, proceed as follows:
1. Keep the rifle pointed in a safe direction for at least one minute with the bolt left in the closed position. **BE PREPARED FOR THE RIFLE TO FIRE AT ANY INSTANT.**
2. After at least one minute, open the bolt assembly, keeping the rifle pointed in a safe direction.
3. Put the safety switch in the 'S' position. See instructions on Page ?.
4. Remove the percussion cap from the nipple and use a nipple pick to ensure the flashhole through the nipple is clear.
5. Place a new percussion cap on the nipple.
6. Close the bolt assembly.
7. Aim at the target.
8. Put the safety switch in the 'F' position and fire. See instructions on Page ?.
9. If the rifle still does not fire, repeat steps 1 through 8 several more times.
10. If after several attempts, the rifle will not fire, the charge must be removed manually. See **REMOVING A CHARGE** Page ? for instructions on how to remove the charge.

SUGGESTED LOADING DATA:

This data was compiled through testing done by Remington Arms using Remington projectiles on both .50 and .54 caliber Model 700 ML In-Line Muzzleloading Rifles. The charge weights listed are the minimum, nominal, and maximum charge weights for the given projectile. All testing was done with 2f or FFg black powder. Use the equivalent volume of PYRODEX RS. No other powder type or granulation is to be used in this rifle. See instructions on Page ?.

NEVER EXCEED THE MAXIMUM CHARGE WEIGHT LISTED FOR THE PROJECTILE YOU ARE USING. NEVER SUBSTITUTE ANY QUANTITY OF ALTERNATE POWDER TYPE OR GRANULATION. Failure to adhere to these maximum charge weights or substitute any powder type or granulation could result in serious person injury and damage to the firearm.

The minimum suggested charge weight is that which produces a minimum average 100 yard projectile energy level of 1250 ft.-lbs. for the effective harvesting of big game animals.

The nominal suggested charge weight is that which produces the optimum average accuracy and velocity.

The maximum suggested charge weight is that which is considered the maximum allowable safe operating charge weight for this rifle. **Do not exceed this charge weight. To do so will not only possibly cause severe personal injury, and damage to the rifle, but will also produce exceedingly high pressures and increase in recoil for very little gain in velocity and a severe loss of accuracy.**

.50 CALIBER SABOTED PROJECTILES

Projectile	Grain Weight	Black Powder Charge (Grains)	Muzzle Velocity (Feet Per Second)	Muzzle Energy (Foot Pounds)
		?? grs. FFg	???? f.p.s.	???? ft.-lbs.
Core-Lokt	275	?? grs. FFg	???? f.p.s.	???? ft.-lbs.
		?? grs. FFg	???? f.p.s.	???? ft.-lbs.
		?? grs. FFg	???? f.p.s.	???? ft.-lbs.
Core-Lokt	303	?? grs. FFg	???? f.p.s.	???? ft.-lbs.
		?? grs. FFg	???? f.p.s.	???? ft.-lbs.

.50 CALIBER LEAD LUBED CONICALS

Projectile	Grain Weight	Black Powder Charge (Grains)	Muzzle Velocity (Feet Per Second)	Muzzle Energy (Foot Pounds)
Gamemaster		?? grs. FFg	???? f.p.s.	???? ft.-lbs.
Hollow Point	365	?? grs. FFg	???? f.p.s.	???? ft.-lbs.
		?? grs. FFg	???? f.p.s.	???? ft.-lbs.
Gamemaster		?? grs. FFg	???? f.p.s.	???? ft.-lbs.
Soft Point	385	?? grs. FFg	???? f.p.s.	???? ft.-lbs.
		?? grs. FFg	???? f.p.s.	???? ft.-lbs.

.50 CALIBER ROUND BALL

Projectile	Grain Weight	Black Powder Charge (Grains)	Muzzle Velocity (Feet Per Second)	Muzzle Energy (Foot Pounds)
Golden Ball		?? grs. FFg	???? f.p.s.	???? ft.-lbs.
.490" Ball	179	?? grs. FFg	???? f.p.s.	???? ft.-lbs.
		?? grs. FFg	???? f.p.s.	???? ft.-lbs.

.54 CALIBER SABOTED PROJECTILES

Projectile	Grain Weight	Black Powder Charge (Grains)	Muzzle Velocity (Feet Per Second)	Muzzle Energy (Foot Pounds)
		?? grs. FFg	???? f.p.s.	???? ft.-lbs.
Core-Lokt	275	?? grs. FFg	???? f.p.s.	???? ft.-lbs.
		?? grs. FFg	???? f.p.s.	???? ft.-lbs.
		?? grs. FFg	???? f.p.s.	???? ft.-lbs.
Core-Lokt	303	?? grs. FFg	???? f.p.s.	???? ft.-lbs.
		?? grs. FFg	???? f.p.s.	???? ft.-lbs.

.54 CALIBER LEAD LUBED CONICAL

Projectile	Grain Weight	Black Powder Charge (Grains)	Muzzle Velocity (Feet Per Second)	Muzzle Energy (Foot Pounds)
Gamemaster		?? grs. FFg	???? f.p.s.	???? ft.-lbs.
Soft Point	385	?? grs. FFg	???? f.p.s.	???? ft.-lbs.
		?? grs. FFg	???? f.p.s.	???? ft.-lbs.

Projectile	Grain Weight	Black Powder Charge (Grains)	Muzzle Velocity. (Feet Per Second)	Muzzle Energy (Foot Pounds)
Golden Ball		?? grs. FFg	???? f.p.s.	???? ft.-lbs.
.530" Ball	226	?? grs. FFg	???? f.p.s.	???? ft.-lbs.
		?? grs. FFg	???? f.p.s.	???? ft.-lbs.

TO ADJUST THE SIGHTS

This Remington Model 700 ML is equipped with a fully adjustable rear sight. It can be adjusted for both windage (left to right) and elevation (up and down).

TELESCOPIC SIGHTS:
The top of the receiver has holes for the installation of telescopic sights. The same Model 700 two piece scope mounts that fit the centerfire rifles will fit on this muzzleloader. The Model 700 Short Action one piece scope mounts will also fit. NOTE: The use of telescopic sights are illegal in some areas during the muzzleloading season for big game hunting. Be sure to check the regulations in the area you will be hunting before installing the scope.

TO ADJUST THE REAR SIGHT:

Move the rear sight slide for elevation adjustments and aperture for windage adjustments, in the same direction as you need the point of impact on the target to move. See Picture ? and the information in the table.

POSITION ON TARGET	ADJUSTMENTS
Bullet hits above the center.	a. Loosen the elevation screw on the rear sight. b. Slide the rear sight down (backward) on the ramp. c. Tighten the elevation screw.
Bullet hits below the center.	a. Loosen the elevation screw on the rear sight. b. Slide the rear sight up (forward) on

	the ramp. c. Tighten the elevation screw.
Bullet hits to the left.	a. Loosen the windage screw on the rear sight. b. Slide the rear sight aperture to the right. c. Tighten the windage screw.
Bullet hits to the right.	a. Loosen the windage screw on the rear sight. b. Slide the rear sight aperture to the left. c. Tighten the windage screw.

HOW TO USE THE WEATHER SHROUD

This Remington Model 700 ML is equipped with an optional weather shroud that can be placed on the end of the bolt to enclose the percussion cap and make it resistant to inclement weather. This will decrease the chances of the percussion cap getting damp in inclement weather which will decrease the chances of a misfire or hangfire.
NOTE: The use of the weather shroud is illegal during the muzzleloading season for big game hunting in some areas which require that the ignition source be exposed to the elements (open breech) prior to firing. Be sure to check the regulations in the area you will be hunting prior to installing the weather shroud.

The weather shroud is intended only for use while hunting or shooting in inclement weather. It should not be used when target shooting or sighting in the rifle. This is due to the accumulation of fouling that blows back through the nipple onto the firing pin and into the bolt body when shooting multiple shots. The majority of the fouling usually escapes to the surrounding environment with the weather shroud not in place, but is accumulated on the firing pin and in the bolt body with the weather shroud in place. This could possibly lead to a restriction between the firing pin and the bolt body which could possibly slow down the firing pin and potentially cause the percussion cap to not fire.

INSTALLING THE WEATHER SHROUD:

The weather shroud has a gas escape hole in it's center which acts as a vent for allowing the blowback gases that pass through the flashhole in the nipple upon firing to be vented to the surrounding environment. **In order for the vent to work properly it must be facing outward, aligned with the ejection port opening, when the bolt is closed**. See Picture ?.

To install the weather shroud:

1. Remove the bolt bolt assembly and slip the shroud over the end of the bolt body. There is no top and bottom to the shroud, so it can be installed on either end.
2. Reinstall the bolt assembly and close the bolt.
3. Make a note as to which way the shroud needs to be rotated on the end of the bolt body such that the vent hole is facing outward, aligned with the ejection port opening, when the bolt is closed.
4. Remove the bolt body and make the adjustment to the weather shroud.
5. Reinstall the bolt assembly and close the bolt to verify that the vent hole in the shroud is properly aligned with the ejection port. Repeat as necessary. See Picture ?.

MODEL 700 ML IN-LINE MUZZLELOADING RIFLE
FACT SHEET

- Model 700 Short Action based design (it's a 700 with a ramrod)

- Available in 50 caliber stainless and carbon steel and 54 caliber stainless steel

- Non-glare glass bead finish

- Smooth, easy to operate, bolt action design (safer and easier to use)

- Has an open or optional closed (via removable shroud) breech to meet all state regulations

- Will accept standard 700 short action scope mounts

- 1-28" rifling, 24" barrel to accurately fire both conical lubed and saboted projectiles

- Standard 700 fire control

- Fastest lock time of the "big four" manufacturers. We are at approx. 3ms. The Knight is closest to us at 9ms.

- Standard 700 fully adjustable open sights

- Standard 700 short action synthetic stock (altered for barrel and ramrod only). Easily upgraded to wood or other materials (possible future offering)

- No need to use a capper to place a percussion cap on the nipple

- Short fire channel for quick, reliable ignition

- Removable breech plug for quick, easy cleanup and charge removal (if necessary)

- Can easily be adapted to fire shotgun primers (possible future offering)

- Solid, one piece aluminum ramrod (no end caps to come off)

- ~~Safe "magnum" barrel contour and receiver design (most likely the safest by design)~~

- Easily adaptable to shotgun barrels or barrels of other calibers (possible future offering)

- Made from the same quality materials used in the 700

- Comes with loading and cleanup accessories

- Bolt opens for easy access to the nipple for quick loading and reloading

PR 0724

- Breech plug utilizes a standard 7/16" socket wrench as an option for removal (no more sending the rifles back because the wrench provided was inadequate for breech plug removal)

- Swivel sling studs standard

- Good accuracy at 100 yards (1 1/2" or less 5 shot groups at 100 yards capable with sabots). Most advertise only 3 shot groups at 50 yards

Remington Arms Company, Inc.

tel: 41-38-245560 fax: 41-38-245561

DATE: OCTOBER 13, 1995 PAGES: 1

M700 Performance Enhancement

FAX TO: ROBERT W. HASKIN, Jr.
FAX: 302-993-8855

FROM: KEN SOUCY

RE: CENTERFIRE RIFLE ACCURIZER

Sorry for the delay in replying to your question, but your note just caught up to me today.

The "AccuMajic Accurizer" is, in fact, similar to the device we had been thinking about.

This is not, by any means, a new idea. Similar devices have been around for decades. That doesn't make it a bad idea, just not new.

The M/700 is well suited to a device such as this. We employ a barrel pad at the tip of the fore end, the theory being that barrel contact with a dampening material (such as wood) will change both the frequency and amplitude of barrel vibrations. This seems to be borne out by the evidence. Most M/700'S will shoot better as-is, rather than free floating.

On target guns such as the 40XB-BR, a different approach is taken. Here the barrel is free floated, very heavy, and typically short. Heavy, short barrels minimize the amplitude of the vibrations. Fore end contact is frowned on in guns like this because it is felt that contact will change the point of impact as the temperature changes, or, in the case of wood, as the humidity changes. Further, free floated guns need good action bedding to shoot well. Custom bedding, bedding blocks and bedding pillars serve this purpose.

I assume your interest in the subject is prompted by the need to one-up the BOSS system. I agree. Browning has done a good job. Their system works and is relatively easy to use. The only disadvantage I can see is that is ugly. A movable contact point in the fore end would certainly look better. I can envision a system that would be easy to adjust, say with a screwdriver from the front, but have trouble figuring a good way to display settings.

Another option may be to do something similar to Browning's system. I've never seen their patent, but would be interested in knowing how broad it is. I think we could make it look better than they did.

We would be happy pursue this opportunity further. If you would like us to do so, it could be included in the M/700 Performance Enhancement program.

Jay: Please pursue w/ Soucy as part of the Enhancement program

PR 0726

REMINGTON ARMS COMPANY, INC.

CC: Tony Hancock

July 24, 1995

TO: ROBERT W. HASKIN, JR.

FROM: JAY BUNTING JMB

ACCURACY ENHANCEMENTS/BOLT ACTION RIFLES

Pursuant to Tony Hancock's memo dated May 26, 1995, Marketing recommends that the following rifles and calibers are used for accuracy testing:

- Model 700 BDL

  Short Action 243 Win.
  Long Action 30.06 Springfield
  Magnum 7MM Rem. Mag.

- Model 700 VS SF

  22-250 Remington

- Model 700 Sendero

  300 Win. Mag.

- Model Seven Stainless Synthetic

  308 Win.

Tony: Per your request RWH 7.27 Sent 8/8/95 Via Mail

The above models and calibers should provide an adequate cross section of product for testing purposes. Please let me know if there are any questions.

JMB:rsh:accenhan.doc

PR 0727

REMINGTON ARMS COMPANY, INC.

July 18, 1995

Tony PPI mailed 7/31/95

TO: R. W. HASKIN

FROM: J. M. DWYER JMD/a

SUBJECT: ACCURACY ENHANCEMENTS

Regarding potential caliber and bullet weight choices for R&D's test program, I have developed two lists based on two differing sets of criteria.

- Sales Volumes
- Bullet Accuracy Potential

If we wish to influence accuracy performance of common hunting bullets sold to our core customer then popularity of individual SKU's as measured by annual sales volumes should be the criteria used in our choice of test ammunition. If on the other hand we are trying to wring all the accuracy potential out of bullets which are specifically designed to group extremely tightly then a second list comprised of match or extended range bullets might be more appropriate.

A list of the 10 most popular SKU's and 7 match or accurized hunting bullets follows:

POPULARITY			ACCURACY POTENTIAL*		
1.	30-06 SPGFD	150 PSPCL	1.	308 Win	168 BTHP (Match)
2.	30-06 SPGFD	180 PSPCL	2.	223 Rem	60 HP (Match)
3.	270 Win	150 SPCL	3.	30-06 SPGFD	165 ERBT
4.	243 Win	100 PSPCL	4.	308 Win	165 ERBT
5.	270 Win	130 PSPCL	5.	270 Win	140 ERBT
6.	223 Rem	50 PSP	6.	7MM Rem Mag	165 ER
7.	7MM Rem Mag	150 PSPCL	7.	243 Win	105 ER
8.	22-250 Rem	55 PSP			
9.	308 Win	150 PSPCL			
10.	30-06 SPGFD	180 SPCL			

*Accuracy cartridges chosen to duplicate range of calibers listed under "Popularity"

Again, if our goal is to optimize firearm accuracy the most accurate bullet list may be preferable, while the most popular caliber list will undoubtedly impact more customers.

ACCUR.JMD/ame

ATTORNEY - CLIENT PRIVILEGE

MEMORANDUM

TO: Jay M. Bunting

FROM: Robert W. Haskin, Jr.

DATE: July 17, 1995

SUBJECT: ACCURACY ENHANCEMENTS - BOLT ACTION RIFLES

Attached is a copy of Tony Hancock's memo of May 26, 1995, pertaining to the above-referenced subject. Specifically with respect to Tony's memo, I would appreciate your selecting the specific guns by model and caliber which R&D should utilize in conducting its sensitivity analysis.

Thank you for your assistance.

RWH/da
cc: Tony A. Hancock
a:\rwh0795\jmbaccur

Blind P.S. on T. Hancock's copy:

Tony, I appreciate your bringing this matter to my attention. I am sorry that your request was apparently overlooked.

ATTORNEY - CLIENT PRIVILEGE

MEMORANDUM

TO: John M. Dwyer

FROM: Robert W. Haskin, Jr.

DATE: July 17, 1995

SUBJECT: ACCURACY ENHANCEMENTS

Attached is a copy of Tony Hancock's May 26, 1995, memo pertaining to the above subject. I have asked Jay to select a small number of calibers for R&D's sensitivity analysis. I would appreciate your determining what those calibers are to be, and then advising Tony as to the appropriate ammunition that he should be testing. The goal is to establish a workable test matrix on which to baseline accuracy enhancements. I would suggest the use of the most popular calibers and bullet weights.

Thank you for your assistance.

RWH/da
cc: Jay M. Bunting
Tony A. Hancock

a:\rwh0795\jmdacour

Addressed - In person conference 6-1-95 in E-town
R. Haskin
J. Bowling
T. Hancock / D. Diaz

Remington Confidential

MEMORANDUM

TO: ROBERT W. HASKIN, JR.
E.S. RENSI

FROM: TONY A. HANCOCK Tony

DATE: MAY 26, 1995

SUBJECT: **ACCURACY ENHANCEMENTS FOR BOLT ACTION RIFLES**

In our meeting on Thursday, May 25, 1995, we had considerable discussion over possible mechanisms of improving the accuracy of our bolt action rifle family. Since the meeting I have done some more thinking and would like to request your help in defining those things most likely to produce success in this area. In Remington's most recent catalog we have 17 calibers and several styles in the same calibers of the M 700 bolt action rifles and we manufacture may types of ammunition in each caliber. The test matrix necessary to establish the current accuracy across our product line represents a formidable task. If this is expanded to include competitive ammunitions the task becomes 4 or 5 times larger than this. In light of the size of this undertaking, I would like to propose an alternate way of achieving the same goal.

R & D will prepare a list and identify the areas which are thought to be the major contributors to bolt action rifle accuracy. We will select firearms which have been carefully measured and controlled with respect to the critical dimensions and test their accuracy using a controlled lot of ammunition. We will then modify the dimension being tested and again perform an accuracy test. This testing will continue until we are outside the specification limits for the particular dimension. The data from this test will provide a sensitivity analysis correlating the particular dimension or variable being changed to accuracy with all other things being held constant. I need your assistance on two things:

1. Please help us identify the top contributors to accuracy. I am attaching a list of those areas we believe to be most significant.

2. We plan to perform this testing on specially selected kinds of firearms and calibers. The idea would then be extended across the line to other firearm types and ammunitions. Data would be provided to marketing to substantiate any claims concerning accuracy improvement. We need your help in selecting the caliber and firearm type to begin this testing with.

Thanks in advance for your help. Please forward your responses back to me or Danny Diaz, as soon as possible.

TAH/rat
Enclosure
cc: Tommy Millner
File
c:\plan.doc

PR 0732

M/700 AE IMPROVEMENTS

Process Enhancements to Improve Accuracy

- ☐ Improved Receiver locking surface perpendicularlity
- ☐ Improved Receiver face / Barrel hub perpendicularlity
- ☐ Improved Bolt lug perpendicularlity to bolt body
- ☐ Improved Bolt face perpendicularlity to bolt lugs
- ☐ Reduced Barrel groove diameter and tolerance, especially at muzzle end
- ☐ Improved Barrel crowning
- ☐ Improved Barrel chamber concentricity
- ☐ Broach bolt hole versus the current drill operation
- ☐ FREE-BORE IMPROVEMENT
- ☐ IMPROVED BEDDING

Design Enhancements to Improve Accuracy

- ☐ Reduce Lock Time
- ☐ ~~Bedding of Barrel~~ to stock (recoil lug and 1" of bbl)
- ☐ Muzzle Break with noise reduction
  Brake — no — Not an R&D project.

Recoil reduction

Freebore
Headspace
New fire control
5R rifling
Adjustable bedding
Smoother Bolt/Action Operation
Improved Lock Time - titanium
Bolt Lock
Recoil Reduction

PR 0733

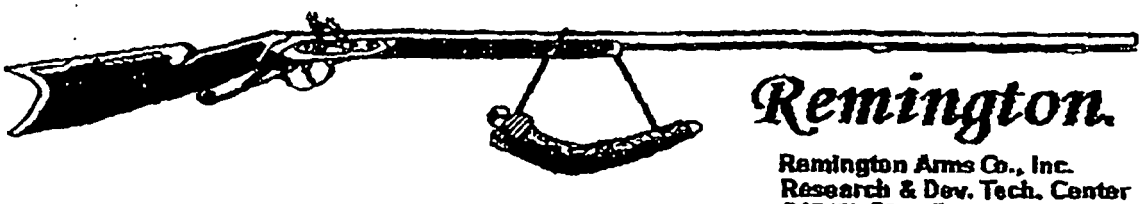

Remington.

Remington Arms Co., Inc.
Research & Dev. Tech. Center
315 W. Ring Rd.
Elizabethtown, KY 42702

Date: May 26, 1993
Number of pages including cover sheet 2

TO: Bob Haskin, Esq.

FROM: *Tony Hancock*
Vice-President

Phone
Fax Phone
cc:

Phone: (502) 769-7601
Fax Phone (502) 737-9576

Remarks:		
*Urgent	*For Your Review	*Reply ASAP

Remington.

F: Firearms group

REMINGTON ARMS COMPANY, INC.
RESEARCH & DEVELOPMENT TECHNOLOGY CENTER
315 W. RING ROAD
ELIZABETHTOWN, KENTUCKY 42701
(502) 769-7601 FAX (502) 737-9576

DR. TONY A. HANCOCK
VICE PRESIDENT

July 14, 1995

Mr. Robert W. Haskin, Jr.
Remington Arms Co., Inc.
Delle Donne Corporate Center
1101 Centre Road
Wilmington, Delaware 19805-1270

RE: Memorandum of May 26, 1995
Accuracy Enhancements for Bolt Action Rifles

Dear Bob:

I have enclosed with this letter a photocopy of my memorandum and attachment to you and Sam Rensi dated May 26, 1995. I have also included a photocopy of the fax cover sheet and transmission sheet wherein these documents were faxed to you on this date. Again, I do not understand why this information did not reach your office.

Should you have any questions or need any further information, please contact me.

Sincerely,

Tony

Tony A. Hancock
Vice President
Research & Development

TAH/rat

Enclosure

cc: File
c:\letter.doc\bhaskin

PR 0735

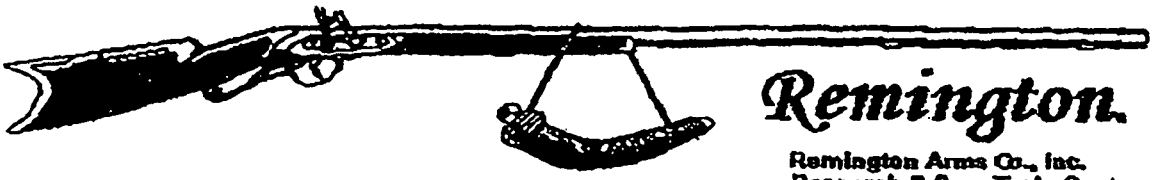

Remington.

Remington Arms Co., Inc.
Research & Dev. Tech. Center
315 W. Ring Rd.
Elizabethtown, KY 42702

Date: May 26, 1993
Number of pages including cover sheet 3

TO: Bob Haskin, Esq.

FROM: *Tony Hancock*
Vice-President

Phone
Fax Phone
cc:

Phone: (502) 769-7601
Fax Phone (502) 737-9576

Remarks:		
*Urgent	*For Your Review	*Reply ASAP

⋊⋊⋊ TRANSMISSION REPORT ⋊⋊⋊

MAY-26-95 17:27 ID:5027379576 REMINGTON ETOWN

START TIME	MAY-26-95 17:26
TELEPHONE NUMBER	1-302-993-8855
NAME(ID NUMBER)	3029938855
TRANSMISSION MODE	ECMR
RESOLUTION	STD
PAGES TRANSMITTED	003
MAILBOX	OFF
SECURITY	OFF
INFORMATION CODE	OK
REDIALING TIMES	00
MACHINE ENGAGED	00'55
JOB NUMBER	527

THIS TRANSMISSION IS COMPLETED.

LAST SUCCESSFUL PAGE 003

PR 0737

To: Danny D. Diaz
From: Scott R. Franz

12/11/95

Subject: CAD SYSTEM FILES

As per your request I am supplying you with a listing of all files I have on the CAD system relative to bolt action type fire controls. All the files that I have pertain to simulating drop testing of the FA-type fire control only. Included in these files would be copies of CADDS5 parts used to generate the IGES files to import this geometry into our ADAMS mechanical simulation software, various ADAMS simulation programs used to simulate the drop test and output files from some of the runs.

Files with the following extensions are ADAMS files:

.adm	
.log	Text files that show the commands used during the last ADAMS session
.out	Simulation raw output listing
.msg	Text file listing messages generated during the last run.
.res	Simulation results file.
.gra	Simulation graphics file.
.req	Simulation requests file.
.bck	Model backup file generated when a run is made.
.bin	These files are the actual ADAMS models
.acf	ADAMS command file.
.log%	A text log file I think.
.mater	Material listing file.
.d	Another ADAMS generated backup file I think.

The important files would be .bin files with .res & .gra files. These represent the models that I generated and their major output files.

All other files such as *.igs, etc. would be CADDS5 files representing the various parts in the fire control. I am the owner on all these files.

/usr4/srf/fa_fire_control/fa_fire_control.adm
/usr4/srf/fa_fire_control/parts/bolt-plug.log
/usr4/srf/fa_fire_control/parts/bolt-plug.rpt
/usr4/srf/fa_fire_control/parts/firing-pin-body.log
/usr4/srf/fa_fire_control/parts/fir-pin-head.log
/usr4/srf/fa_fire_control/parts/firing-pin.log
/usr4/srf/fa_fire_control/parts/sear.log
/usr4/srf/fa_fire_control/parts/side-plate-ls.log
/usr4/srf/fa_fire_control/parts/trig-eng-screw.log
/usr4/srf/fa_fire_control/parts/trigger.log
/usr4/srf/fa_fire_control/parts/bolt-plug.igs

PR 0764

/usr4/srf/fa_fire_control/parts/fctrigplate.igs
/usr4/srf/fa_fire_control/parts/fir-pin-head.igs
/usr4/srf/fa_fire_control/parts/firing-pin-body.igs
/usr4/srf/fa_fire_control/parts/sear.igs
/usr4/srf/fa_fire_control/parts/side-plate-ls.igs
/usr4/srf/fa_fire_control/parts/trig-eng-screw.igs
/usr4/srf/fa_fire_control/parts/trigger.igs
/usr4/srf/fa_fire_control/parts/fir-pin-head/exp2949/exp2949
/usr4/srf/fa_fire_control/parts/fir-pin-head/exp2949/exp2949.attr
/usr4/srf/fa_fire_control/parts/sear/99261/1
/usr4/srf/fa_fire_control/parts/sear/99261/1.attr
/usr4/srf/fa_fire_control/parts/sear/exp2898/exp2898
/usr4/srf/fa_fire_control/parts/sear/exp2898/1
/usr4/srf/fa_fire_control/parts/sear/exp2898/1.attr
/usr4/srf/fa_fire_control/parts/sear/exp2898/exp2898.attr
/usr4/srf/fa_fire_control/View_Ana.log
/usr4/srf/fa_fire_control/fa_fire_control.out
/usr4/srf/fa_fire_control/fa_fire_control.msg
/usr4/srf/fa_fire_control/fa_fire_control.res
/usr4/srf/fa_fire_control/fa_fire_control.gra
/usr4/srf/fa_fire_control/fa_fire_control.req
/usr4/srf/fa_fire_control/aview.log
/usr4/srf/fa_fire_control/fa_fire_control_2.out
/usr4/srf/fa_fire_control/fa_fire_control_2.msg
/usr4/srf/fa_fire_control/fa_fire_control_2.res
/usr4/srf/fa_fire_control/fa_fire_control_2.gra
/usr4/srf/fa_fire_control/fa_fire_control_2.req
/usr4/srf/fa_fire_control/fa_fire_control.bck
/usr4/srf/fa_fire_control/archive/fa_fire_control.bin
/usr4/srf/fa_fire_control/archive/fa_fire_control_slop.bin
/usr4/srf/fa_fire_control/archive/trigger_snapped.bin
/usr4/srf/fa_fire_control/archive/clip
/usr4/srf/fa_fire_control/archive/clip2
/usr4/srf/fa_fire_control/archive/dif-750-clip
/usr4/srf/fa_fire_control/archive/fa_fire_control_free_drop.bin
/usr4/srf/fa_fire_control/View_Ana.acf
/usr4/srf/fa_fire_control/aview.log%
/usr4/srf/fa_fire_control/ADAMSDIR.LIS
/usr4/srf/fa_fire_control/fa_fire_control_free_drop.bin
/usr4/srf/fa_fire_control/materials.mater
/usr4/srf/fa_fire_control/fa_fire_control.d

In addition to the above files I also have files on my PC relating to fire control drop testing. These files are on my C: Drive in the following directory:

c:\franz\m-750\

These files also pertain to simulation work and drop test measurements taken to verify the simulation work accuracy. The .XLS files are EXCEL data files summarizing simulation work. The .DXF files are CAD drawing files of some of the parts in the fire control. The .PCX files are pictures of oscilloscope traces of measurements taken on M/700 and experimental fire controls. Measurements taken include the acceleration imparted to the gun when dropped, acceleration imparted to the gun when impacted by a hammer as well as the strain imparted to the trigger engagement screw during these same tests. All files pertaining to this work are listed below.

```
Directory PATH listing for Volume AVL2C00ABA
Volume Serial Number is 2C17-1B0B
C:.
| ANGLE1.XLS
| ANGLE.XLS
| 27-30-45.XLS
| HIGHSTOP.XLS
| LOWSTOP.XLS
| FPHD45.DXF
| SSCAM45.DXF
| CV-FILES.TXT
| CV-F-DDD.TXT
|
\---SCRWSTRN
   +---TEST4
   |     TEK00000.PCX
   |     TEK00001.PCX
   |     TEK00002.PCX
   |     TEK00003.PCX
   |     TEK00004.PCX
   |     TEK00005.PCX
   |     TEK00006.PCX
   |     TEK00007.PCX
   |     TEK00008.PCX
   |     TEK00009.PCX
   |     TEK00010.PCX
   |     TEK00011.PCX
   |     TEK00012.PCX
   |     TEK00013.PCX
   |     TEK00014.PCX
   |     TEK00015.PCX
   |
   +---CALIBR
   |     CALIBR.MTW
```

PR 0766

```
|    TEK00000.PCX
|    TEK00001.PCX
|    TEK00002.PCX
|    TEK00003.PCX
|    TEK00004.PCX
|    TEK00005.PCX
|    TEK00006.PCX
|    TEK00007.PCX
|    TEK00008.PCX
|
+---TEST1
|    ACCEL1.DOC
|    SCRW-ST.XLS
|    STRAIN1.DOC
|    VERTDROP.MTW
|    KW1.DOC
|
+---TEST2
|    TEK00000.PCX
|    TEK00001.PCX
|    TEK00002.PCX
|    TEK00003.PCX
|    TEK00004.PCX
|    TEK00005.PCX
|    TEK00006.PCX
|    TEK00007.PCX
|    TEK00008.PCX
|    TEK00009.PCX
|    TEK00010.PCX
|    TEK00011.PCX
|    TEK00012.PCX
|    TEK00013.PCX
|    TEK00014.PCX
|    TEK00015.PCX
|    TEK00016.PCX
|    TEK00017.PCX
|    TEK00018.PCX
|    TEK00019.PCX
|    TEK00020.PCX
|    TEK00021.PCX
|    TEK00022.PCX
|    TEK00023.PCX
|    TEK00024.PCX
|    TEK00025.PCX
|    TEK00026.PCX
```

```
|   TEK00027.PCX
|   TEK00028.PCX
|   TEK00029.PCX
|   TEK00030.PCX
|   TEK00031.PCX
|   TEK00032.PCX
|   TEK00033.PCX
|   TEK00034.PCX
|   TEK00035.PCX
|   TEK00036.PCX
|   TEK00037.PCX
|   TEK00038.PCX
|   TEK00039.PCX
|   TEK00040.PCX
|   TEK00041.PCX
|   TEK00042.PCX
|   TEK00043.PCX
|   TEK00044.PCX
|   TEK00045.PCX
|   TEK00046.PCX
|   TEK00047.PCX
|   TEK00048.PCX
|   TEK00049.PCX
|   TEK00050.PCX
|   TEK00051.PCX
|   TEK00052.PCX
|   TEK00053.PCX
|
\---TEST3
    TEK00000.PCX
    TEK00001.PCX
    TEK00002.PCX
    TEK00003.PCX
    TEK00004.PCX
    TEK00005.PCX
    TEK00006.PCX
    TEK00007.PCX
    TEK00008.PCX
    TEK00009.PCX
    TEK00010.PCX
    TEK00011.PCX
    TEK00012.PCX
    TEK00013.PCX
    TEK00014.PCX
    TEK00015.PCX
```

TEK00016.PCX
TEK00017.PCX
TEK00018.PCX
TEK00019.PCX
TEK00020.PCX
TEK00021.PCX
TEK00022.PCX
TEK00023.PCX
TEK00024.PCX
TEK00025.PCX
TEK00026.PCX
TEK00027.PCX
TEK00028.PCX
TEK00029.PCX
TEK00030.PCX
TEK00031.PCX
TEK00032.PCX
TEK00033.PCX
TEK00034.PCX
TEK00035.PCX
TEK00036.PCX
TEK00037.PCX
TEK13-M.PCX

BRYAN CAVE LLP

A PARTNERSHIP INCLUDING PROFESSIONAL CORPORATIONS

3500 ONE KANSAS CITY PLACE

1200 MAIN STREET

POST OFFICE BOX 419914

KANSAS CITY, MISSOURI 64141-6914

(816) 374-3200

FACSIMILE: (816) 374-3300

TELECOPY INFORMATION PAGE

This facsimile contains information which (a) may be **LEGALLY PRIVILEGED, PROPRIETARY IN NATURE, OR OTHERWISE PROTECTED BY LAW FROM DISCLOSURE**, and (b) is intended only for the use of the Addressee(s) named below. If you are not the Addressee, or the person responsible for delivering this to the Addressee(s), you are hereby notified that reading, copying, or distributing this facsimile is prohibited. If you have received this facsimile in error, please telephone us immediately and mail the facsimile back to us at the above address. Thank you.

CLIENT NO.: C17668 / 068650 DATE: August 13, 1996

Please Deliver the Following

TO: Danny Diaz

COMPANY: Remington Arms Company, Inc.

TEL#: 502-769-7627 TEL/FAX#: 502-737-9576

This material is

FROM: John W. Shaw, Esq. ATTORNEY #: JWS

TOTAL NUMBER OF PAGES: 3 (including this page)

If you do not receive all the material, please call Janice, Ext. 3325

MESSAGE FROM SENDER:

10404

Fire Control Design Review 03/28/95

Attend: Orr, Hancock, Schneider, Mellon, Bowers, Rogan, Hancock, Finney, Ford, Kenny, Stevenson, Cunningham, Thompson, Reust, Orr, Dawson, Schneider

Sample Drop Limits — Concept Fire Control
- Ken Green only have good experience to this

Model Saw Issue - Testing on Remington Standard
Assembly Issue - "Screwdriver" Sideplates are an objective must because the fire control needs clearance access / Bob has cost argument on screwdriver / rear grounding

Manufacturing
(a) Min/max tolerance study complete? -
(1) 5½/1000 clear - spacing on CYn
(2) Worst-case dimensional analysis
(b) 3-5 / 3-0 + Man Tol. Tension Adjustment
(c) Maximum Engagement Drop Test
- Drop gun with artificial wear Engagement
- Min/Max Ti-Gear Force Spec. Drop Test
(d) Components
- Flatness Spec. on Sideplates
- Hole Spec. on Sideplates
- Plungers / How to tell the difference in size
- " / 32 RMS Surface Finish / How do you test this.

IL125 02619

PR 0786

(e) Safety Clip –

(f) Bushings – TIR of 1.0 to Tough, looks like Through ~~Finish~~ 3.0 ~~to~~ 88 best variant so far.

(g) Need Models of Current Design

(H) Tamper Proof Testing

(I) Prototyping of other designs / Certain steels

- Sandwich Steels
- Matrix of Testing Components

Cost ≈ 790K Capital for Breakthrough

July 28, 2003

Federal Bureau of Investigation
HRT Building
Quantico, VA 22135
Attention: Theresa M. Powell, Contract Specialist

Dear Ms Powell:

RE: Solicitation – RFP-0026791 308 Winchester Sniper Rifle – TRAINING SECTION

The following information provides an overview of the training, maintenance and lesson plans called for in section 10 TRAINING, of this solicitation.

Upon award of the contract, Remington will make arrangements to provide armorer/gunsmith training for two FBI Academy gunsmiths. This training will take place prior to delivery of the first weapons under the contract at Remington's Ilion, NY factory. Normal tuition will be waived by Remington for this training.

In addition, upon award of the contract, Remington agrees to provide annual training at FBI specified facility for additional gunsmiths and OTU operational staff. The FBI Contracting Officer must notify Remington in writing 60 days prior to the desired training date. Contact information is as follows:

Remington Arms Co. Inc.
c/o Danny Evans – Service Operations Mgr.
P.O. Box 700
Madison, NC 27025

FBI on site training will include, but is not limited to:

- Completed detailed disassembly and reassembly instructions
- Diagnosis and resolution of the caused of malfunctions
- A clear understanding of the rationale for the weapon's design

PR 1486

REM00062567

- The use of all tools, jigs, etc. required to properly maintain the weapons purchased under this contract
- Briefing on critical tolerances and procedures required to comply with factory warranty policies

Sincerely,

Gregory A. Foster
Manager, Law Enforcement
And Government Sales

GAF

PR 1487

REM00062568

July 28, 2003

Federal Bureau of Investigation
HRT Building
Quantico, VA 22135
Atn. Theresa M. Powell, Contract Specialist

RE: Solicitation – RFP-0026791 308 Winchester Sniper Rifle – Submission Specifications

Dear Ms Powell,

The following information provides a detailed review of all of the features of the Remington 40-XS sniper rifle system proposed for this solicitation. Remington certifies that it meets or exceeds all requirements called for in this solicitation or has noted accordingly were changes have been made.

FBI Sniper Rifle Proposal
"Model 40-XS Deployment Rifle System"
Detailed Specification Information

RECEIVER – All features of the receiver used in this rifle meet or exceed the specifications called for in this solicitation

- Model 40-XS stainless steel right hand short action
- Models 40-XS, M-24 and 700P are all identical in design
- Receiver is milled from a solid block of steel
- Receiver rolled as Remington Model 40-X
- Bolt will have a non-reflective polymer based finish
- Bolt handle will be roll pinned to bolt body
- 5 shot magazine capacity
- Scope mounting holes will be 8-40 threads same as M-24
- Receiver will have a non-reflective polymer based finish
- Serial Number to contain "FBI" prefix
- Receiver will be bedded using a combination of a full length aluminum bedding block and the use of synthetic bedding compound

BARREL-- All features of the barrel used in this rifle meet or exceed the specifications called for in this solicitation

- Stainless steel 24" Model 40-X button rifled barrel with non-reflective polymer based finish
- Chambered for .308 Win (SAAMI Specifications)
- Twist rate 1:10 (SAAMI Specifications) 6-Groove Button Rifled
- Twist rate and caliber rolled on barrel
- Standard 40-X barrel contour (similar to Douglas #6 contour)
- Protective crown
- Barrel free-floating
- Headspace 1.630" Min. to 1.633" Max.
- Accuracy specification stated as ½ MOA 5-shot group out of box, 1 MOA after 5k rounds

TRIGGER

- Model 700 stainless steel fire control
- Trigger pull set at 3.75 lbs
- Entire trigger assembly is weather impervious
- Trigger is adjustable only by factory or authorized gunsmith

TRIGGER FLOORPLATE ASSEMBLY

- Trigger floor plate assembly is the Sunny Hill all steel model
- Allows for 5 shot magazine capacity. 6 round total capacity
- Trigger floor plate assembly is coated with non-reflective polymer based finish

STOCK

- H.S. Precision Pro-Series 2000 Tactical Stock w/ aluminum bedding block
- Adjustable comb
  - Witness marks on stock to serve as adjustment reference points
- Adjustable length of pull
  - Witness marks on stock to serve as adjustment reference points
- 1" rubber recoil pad
- Equipped with standard LE three swivel stud configuration – stud epoxied in place
- Stock color is charcoal gray

SCOPE, MOUNT AND RINGS

- Leupold Vari-X III 3.5-10x40 Long Range M1 scope with Mil-Dot reticle and 30mm tube
- Equipped with Butler Creek Flip-up lens covers (supplied with scope from Leupold)
- Scope lenses are fully multi-coated

- Scope windage and elevation dials are target style and have ¼" MOA click adjustments
- Windage and elevation dials are resettable to zero after sighting in the rifle.
- Zero mark is lockable
- Scope finish is black non-reflective
- Scope is fully waterproof
- Picitinny style scope rail will be from Badger Ordnance Company
- Scope Rings will be from Badger Ordnance Company
- Scope has been mounted and zeroed at 100 yds. prior to shipment

BI-POD (with Pod Lock)

- Rifle utilize a Harris LMS Bi-pod
- To include Pod Loc

SLING

- Rifle will be packed with black synthetic Turner AWS Sling

PHYSICAL DIMENSIONS

Rifle Overall Length	43.5"
Deployment Weight	14.5 lbs
Rifle Width	2.7"

TOOLS

- Rifle will include tool kit consisting of:
- Torque wrench preset to factory settings with rifle serial number marked on wrench
- Hex wrench to disassemble action from stock with rifle serial number marked on tool
- Kleinendorst style bolt disassembly tool with rifle serial number marked on tool

SYSTEM CASE

- The entire system is packed in a lockable Pelican 1750 style deployment case
  - Case equipped with atmospheric purge valve
  - Case equipped with integral wheels for travel
  - Case is waterproof, airtight, crush resistant and dust-proof
  - Case will store the complete rifle system and all of its components excluding ammunition, cleaning solvents and replacement parts.

CLEANING ACCESSORIES

- Rifle will include the following cleaning kit items:
- (2) 44" minimum length one piece Dewey coated cleaning rods
- (2) .308 caliber cleaning jags

- (1) .308 caliber bore brush
- (1) .308 caliber bore guide
- (1) Package bore cleaning patches
- (1) M-24 chamber brush
- (1) M-24 small cleaning brush
- (1) M-24 lens cleaning kit
- Cleaning supplies with exception of cleaning rods and bore guide will be included with tools in small M-24 Pelican style deployment kit case included with each rifle system

OPERATORS MANUAL

- Each rifle will include a operators manual specific to the 40-XS
  - Operators Manual covers nomenclature, function, field stripping, and maintenance of the weapon
  - Manual contains parts list and exploded view drawings

MISCELLANIOUS LITERATURE AND MANUALS

- Any and all manuals/literature packed with any and all components must be placed in an envelope marked as "Component Literature" and packed with system.

VISUAL AIDS

- Each rifle system will include a CD-ROM format visual training aid package containing information on the following. Visual aids were developed in conjunction with Iron Brigade Armory.
  - Nomenclature of major components and assemblies
  - Disassembly/Assembly overview
  - Cycle of Operation
- Upon award of the contract, Remington grants the FBI permission to copy this information and use it internally at its discretion
- Please note that visual aids will require some additional formatting prior to shipment/delivery of first rifles under this contract.

Gregory A. Foster
John Trull
Timothy McCormack
Ron Engell
Tommy Nagle

July 28, 2003

Federal Bureau of Investigation
HRT Building
Quantico, VA 22135
Attention: Theresa M. Powell, Contract Specialist

Dear Ms Powell:

RE: Solicitation – RFP-0026791 308 Winchester Sniper Rifle – Warranty Information.

In accordance with the Technical Proposal section, part g, the following is the general warranty statement provide by our legal council for all Remington products and their incorporated parts.

In the event of a need for product warranty, Remington will work directly with the COTR of this solicitation to resolve the issue to the satisfaction of the FBI.

General Warranty Information:

After shipment of product to any of the designated locations, if product is found to be defective, replacement will be made, if necessary, for all product manufactured within a reasonable production parameter around the designated lot codes of the defective product as agreed upon by Remington and the USSS contracting agent.

Warranty information is as follows:

> WARRANTIES: Remington warrants title to Products sold hereunder and that such Products are of merchantable quality within the meaning of the North Carolina Uniform Commercial Code. Remington warrants that the use or sale of the Products will not infringe upon any United States patent covering the Products themselves; but Remington does not warrant against infringement by reason of the use of Products in combination with other Products or in the operation of any process or after transformation or modification by Purchaser.

PR 1492

REM00062573

Warranty continued;

ANY LIABILITY OF REMINGTON UNDER THIS WARRANTY CLAUSE SHALL BE LIMITED TO REPAIR OR REPLACEMENT OF THE PRODUCT. UNDER NO CIRCUMSTANCES SHALL REMINGTON BE LIABLE FOR ANY SPECIAL, INCIDENTAL, OR CONSEQUENTIAL DAMAGES WHATSOEVER EXCEPT AS OTHERWISE EXPRESSED IN WRITING, REMINGTON MAKES NO OTHER REPRESENTATIONS OR WARRANTIES, EXPRESSED OR IMPLIED, AS TO ANY MATTER WHATSOEVER. Remington specifically reserves the right to inspect all Products alleged to be defective for evidence of misuse or abuse, and to determine whether, in Remington's sole determination, a repair or replacement of any such Product is due. All warranties under this provision are limited to Purchaser only and are unassignable, and shall not extend or apply to any third party.

ADDITIONAL WARRANTY CONDITIONS & REPLACEMENT PARTS

- In addition to Remington's standard warranty, each weapon under this contract are guaranteed for a minimum service life of 50,000 rounds on the receiver and 5,000 rounds on the barrel with proper cleaning and maintenance. Detailed cleaning, maintenance, and lubrication instructions are listed in the Operator's Manual included with each system. These procedures should be followed after each deployment, training exercise, or 90 days of inactivity.
- The following components are considered to be "high-stress" components and are recommended to be replaced every 10,000 rounds. Sufficient replacement "high-stress" components (Qty. 5 of each component) are included with each system to insure a total system life of 50,000 rounds
  - Firing Pin Assembly
  - Extractor
  - Ejector
  - Ejector Pin
  - Ejector Spring
  - Magazine Follower
  - Magazine Follower Spring
  - Front Guard Screw
  - Rear Guard Screw
  - Bolt Stop
  - Bolt Stop Pin
  - Sear Pin

CRITICAL COMPONENT SERVICE LIFE

- Listed below is the anticipated service life of the critical components of the Model 40-XS rifle
  - Receiver - 50,000 Rds
  - Barrel - 5,000 Rds
  - Trigger Assmb. - 50,000 Rds
  - Magazine Box - 50,000 Rds
  - Magazine Follower - 10,000 Rds
  - Magazine Spring - 10,000 Rds
  - Firing Pin Assmb. - 10,000 Rds
  - Extractor - 10,000 Rds
  - Ejector - 10,000 Rds
  - Ejector Pin - 10,000 Rds
  - Ejector Spring - 10,000 Rds

Sincerely,

Gregory A. Foster
Manager, Law Enforcement
And Government Sales

GAF

PR 1494

John Trull

From: Martin, Bonnie
Sent: 07/28/2003 02:23:40 PM
To: Trull, John
CC:
BCC:
Subject: FBI Solicitation Letters

Bonnie

PR 1495

July 28, 2003

Federal Bureau of Investigation
HRT Building
Quantico, VA 22135
Attention: Theresa M. Powell, Contract Specialist

Dear Ms Powell:

RE: Solicitation – RFP-0026791 308 Winchester Sniper Rifle – TRAINING SECTION

The following information provides an overview of the training, maintenance and lesson plans called for in section 10 TRAINING, of this solicitation. In cooperation with Iron Brigade Armory, this information has been designed to support the operation, cleaning and usage of our rifle submission.

Due to the short timeline from announcement to submission, there are areas that we will "tweak" to improvement between now and the award announcement. But I am sure that what is included in this section meets or exceeds the requirements called for in the solicitation.

Should Remington be the successful awardee, Remington armorers and instructors will be available to deliver this presentation and review of the system submitted.

Sincerely,

Gregory A. Foster
Manager, Law Enforcement
And Government Sales

GAF

PR 1496

July 28, 2003

Federal Bureau of Investigation
HRT Building
Quantico, VA 22135
Attention: Theresa M. Powell, Contract Specialist

Dear Ms Powell:

RE: Solicitation – RFP-0026791 308 Winchester Sniper Rifle – Submission Specifications

The following information provides a detailed review of all of the features of the Remington 40XBF sniper rifle system proposed for this solicitation. Remington certifies that it meets or exceeds all requirements called for in this solicitation or has noted accordingly where changes have been made.

FBI Sniper Rifle Proposal
"Model 40-XBF Deployment Rifle System"
Detailed Specification Information

RECEIVER -- All features of the receiver used in this rifle meet or exceed the specifications called for in this solicitation

- Model 40-X stainless steel right hand short action
- Models 40XBF, M-24 and 700P are all identical in design
- Receiver is milled from a solid block of steel
- Receiver rolled as Remington Model 40-XBF
- Bolt will have a Sandstrom finish
- Bolt handle will be roll pinned to bolt body
- Bolt plug will be powder coated to match receiver
- 5 shot magazine capacity
- Scope mounting holes will be oversized to 8-40 same as M-24
- Receiver will have REMTUF Powder Coat finish
- Serial Number to contain "FBI" suffix

PR 1497

BARREL-- All features of the barrel used in this rifle meet or exceed the specifications called for in this solicitation

- Stainless steel 24" Model 40-X button rifled barrel with *M-24 Powder Coat Finish*
- Chambered for .308 Win (SAAMI Specifications)
- Twist rate 1:10 (SAAMI Specifications) 6-Groove Button Rifled
- Twist rate and caliber rolled on barrel
- Standard 40-X barrel contour
- Protective crown
- Barrel free-floating
- *Special xxxxx bedding process*
- Headspace **not to exceed** 1.633"
- Accuracy specification stated as ½ MOA 5-shot group out of box, 1 MOA after 5k rounds

TRIGGER

- Model 700 stainless steel fire control
- Trigger pull set at 3.75 lbs
- Entire trigger assembly is weather impervious
- Trigger is adjustable

TRIGGER FLOORPLATE ASSEMBLY

- Trigger floorplate assembly is the Sunny Hill all steel model
- Allows for 5 shot magazine capacity. 6 round total capacity

STOCK

- H.S. Precision Pro-Series 2000 Tactical Stock w/ aluminum bedding block
- Adjustable comb
- Add witness mark to comb and witness marks on stock for adjustment reference points
- Adjustable length of pull
- Add witness marks on either top or bottom butt pad posts to serve as adjustment reference points
- Limbsaver/R3 recoil pad will be added in place of standard butt plate
- Equipped with standard LE three swivel stud configuration – stud epoxied in place
- Stock color is Gray
- Action will be positively bedded to aluminum bedding block

SCOPE, MOUNT AND RINGS

- Leupold Vari-X III 3.5-10x40 Long Range M1 scope with Mil-Dot reticle and 30mm tube
- Equipped with Butler Creek Flip-up lens covers (supplied with scope from Leupold)
- Scope picitinny rail will be from Badger Company
- Scope Rings will be from Badger Company
- Scope has been mounted and zeroed at 100 yds. prior to shipment

BI-POD (with Pod Lock)

- Rifle utilize a Harris LMS Bi-pod
- To include Pod Loc

SLING

- Rifle will be packed with black synthetic Turner AWS Sling

TOOLS

- Rifle will include tool kit consisting of:
- Torque wrench preset to factory settings with rifle serial number marked on wrench
- Hex wrench to disassemble action from stock with rifle serial number marked on tool
- Kleinendorst style bolt disassembly tool with rifle serial number marked on tool

HARDSHELL CASE

- The entire system is packed in M-24 Pelican style deployment kit case

CLEANING ACCESSORIES

- Rifle will include the following cleaning kit items:
- (2) 44" minimum length one piece Dewey cleaning rods
- (2) .308 caliber cleaning jags
- (2) .308 caliber bore brush
- (1) M-24 chamber brush
- (1) M-24 small cleaning brush
- (1) M-24 lens cleaning kit
- Cleaning supplies with exception of clean rods will be included with tools in M-24 Pelican style deployment kit case included with each rifle system

MAINTENANCE INFORMATION

- Each rifle will be shipped with a laminated sheet with detailed recommended scheduled maintenance/service schedule on front and anticipated service life of the following critical components on the rear (can be more than one sheet if needed):
- Extractor

MAINTENANCE INFORMATION (Continued)

- Ejector and components
- Fire Control
- Internal/external magazine parts
- Firing pin
- All springs
- Barrel (minimum required service life 5k rounds)
- Receiver (minimum required service life 50k rounds)

SPARE PARTS AND SERVICE LIFE INFO

- Each rifle will include spare parts to take rifle to its specified service life
- Spare parts should be packed with tools and cleaning supplies if possible.
- Each spare part package should be labeled with part number, description and quantity included

OPERATORS MANUAL

- Each rifle will include a operators manual specific to the 40XBF

MISCELLANIOUS LITERATURE AND MANUALS

- Any and all manuals/literature packed with any and all components must be placed in an envelope marked as "Component Literature" and packed with system.

Gregory A. Foster
John Trull
Timothy McCormack
Ron Engell
Tommy Nagle

Sincerely,

Gregory A. Foster
Manager, Law Enforcement
And Government Sales

GAF

PR 1500

John Trull

From: Foster, Greg
Sent: 07/26/2003 01:09:02 PM
To: Martin, Bonnie
CC: Trull, John
BCC:
Subject: FBI RIFLE SOLICITATION SECTION FILES

Attached are the files for the FBI Sniper Rifle solicitation. There are many sections that need John's input as well as updates from me.

In order to prevent an incorrect copy being inserted into the final file, at this point, you will be the keeper of the section files and make changes as we find errors or the need to alter something.

I will see you on Monday to show you the DRAFT binder I have set up to show tabs and section information to date.

Section still to be completed that are being handled by John;
Pricing:
Spare Parts
Training and lesson plans

I'm sure that by Monday Afternoon we will have 90% of this done.

PR 1501

July 28, 2003

Federal Bureau of Investigation
HRT Building
Quantico, VA 22135
Atn. Theresa M. Powell, Contract Specialist

RE: Solicitation – RFP-0026791 308 Winchester Sniper Rifle – Warranty information.

Dear Ms Powell,

In accordance with the Technical Proposal section, part g, the following is the general warranty statement provide by our legal council for all Remington products and their incorporated parts.

In the event of a need for product warranty, Remington will work directly with the COTR of this solicitation to resolve the issue to the satisfaction of the FBI.

General Warranty Information:

After shipment of product to any of the designated locations, if product is found to be defective, replacement will be made, if necessary, for all product manufactured within a reasonable production parameter around the designated lot codes of the defective product as agreed upon by Remington and the USSS contracting agent.

Warranty information is as follows:

> WARRANTIES: Remington warrants title to Products sold hereunder and that such Products are of merchantable quality within the meaning of the North Carolina Uniform Commercial Code. Remington warrants that the use or sale of the Products will not infringe upon any United States patent covering the Products themselves; but Remington does not warrant against infringement by reason of the use of Products in combination with other Products or in the operation of any process or after transformation or modification by Purchaser.

PR 1502

Warranty continued;

ANY LIABILITY OF REMINGTON UNDER THIS WARRANTY CLAUSE SHALL BE LIMITED TO REPAIR OR REPLACEMENT OF THE PRODUCT. UNDER NO CIRCUMSTANCES SHALL REMINGTON BE LIABLE FOR ANY SPECIAL, INCIDENTAL, OR CONSEQUENTIAL DAMAGES WHATSOEVER EXCEPT AS OTHERWISE EXPRESSED IN WRITING, REMINGTON MAKES NO OTHER REPRESENTATIONS OR WARRANTIES, EXPRESSED OR IMPLIED, AS TO ANY MATTER WHATSOEVER. Remington specifically reserves the right to inspect all Products alleged to be defective for evidence of misuse or abuse, and to determine whether, in Remington's sole determination, a repair or replacement of any such Product is due. All warranties under this provision are limited to Purchaser only and are unassignable, and shall not extend or apply to any third party.

Sincerely,

Gregory A. Foster
Manager, Law Enforcement
And Government Sales

PR 1503

July 28, 2003

Federal Bureau of Investigation
HRT Building
Quantico, VA 22135
Atn. Theresa M. Powell, Contract Specialist

RE: Solicitation – RFP-0026791 308 Winchester Sniper Rifle

Dear Ms Powell,

The following is a copy of Remington's CERTIFICATE OF LIABILITY. This document is produced for usage in this solicitation / proposal by Aon Risk Services , Inc of New York, NY.

Please let me know if additional information is needed.

Sincerely,

Gregory A. Foster
Manager, Law Enforcement
And Government Sales

PR 1504

REM00061635

July 28, 2003

Federal Bureau of Investigation
HRT Building
Quantico, VA 22135
Atn. Theresa M. Powell, Contract Specialist

RE: Solicitation – RFP-0026791 308 Winchester Sniper Rifle

Dear Ms Powell,

In accordance with the Technical Section, part e and f, the following pertains comments about our prior experience in building sniper rifles and 3 past performance references. This information shows not only Remington's ability to supply this sniper rifle product but our expertise in the field as well.

Remington Arms Company, Inc. holds approximately 85% of the "NEW rifle", sniper rifle market in the United States. By this I mean sniper rifles without any accessories added) sold to law enforcement and military communities. Another 5 to 8% of the remaining 15% USE REMINGTON'S MODEL 700 ACTION to build their rifles from.

Remington produces in excess of 3,000 Model 700 POLICE sniper rifles annually that primarily sell into the law enforcement precision rifle arena. Whether attending a training session by the FBI or a major competition for long-range rifle, REMINGTON products typically dominate the line.

Our 700P, 40XB Tactical and M-24 MIL-SPEC rifles are used extensively by Federal Agencies and Military, worldwide. The 700P being a standard production sniper rifle still carries the guarantee of MOA accuracy right out of the box. Our 40XB and M-24 both have ½ MOA guarantees and are built within special sections of our Ilion, New York production facility.

PR 1505

While our rifles are used world wide, our Model 700 actions by themselves are also highly popular items. Many of the Federal Agency and Military sniper rifles are built off of our action. The current FBI sniper rifles, Secret Service sniper rifles and Marine Corp M40A long-range rifles are built on Model 700 actions. Both the action and all model rifles built on this action have proven battle worthy for decades.

PAST PERFORMANCE CONTRACTS

US ARMY
TACOM – Rock Island, IL
DATE OF EXECUTION: 1992 - 1996
5500 M-24 SNIPER WEAPONS SYSTEMS FOR THE US ARMY
CONTRACT #:
Contact: Bill Baltimore – 309-782-3437
Brenda Boyd – 309-782-4966

This 5500 unit award was granted to Remington Arms Company, Inc. in 1992 and established this rifle as the US ARMY'S MILITARY SNIPER RIFLE SYSTEM. To date these rifles are still in service and used worldwide. Additional units are continually being purchased to supplement the US Army, other branches of the US Military and Foreign military groups. It also included repairs, spare parts and MILITARY SPECIFICATION production documentation.

US ARMY
TACOM – Rock Island, IL
DATE OF EXECUTION: Currently in process
136 M-24 SNIPER WEAPONS SYSTEMS FOR FOREIGN MILITARY SALE
RFP –
Contact: Bill Baltimore – 309-782-3437
Brenda Boyd – 309-782-4966

This RFP is a sole source proposal directed to Remington Arms Company, Inc. for the purpose of purchasing 136 M-24 full systems for US Military and Foreign Military use. There is a 100% option on this solicitation as well.
Award confirmation should be to Remington within the next 2 weeks.

ISRAELI DEFENSE MINISTRY
NY EMBASSY ON BEHALF OF IDF
CONTRACT #
DATE OF EXECUTION
540 M-24 SNIPER WEAPONS SYSTEMS
Mr. Malchi
Mr. Libman

This contract called for the purchase of 540 full M-24 systems (less scopes), training and spare parts in an extremely short timeframe (3 months). This contract was accomplished and while the delivery was scheduled on time, due to State Department issues and IDF issues, the product was not picked up until 2 months after the scheduled delivery date.
All products were delivered without any problems for system flaws.

COLUMBIAN MILITAR
CONTRACT #
DATE OF EXECUTION
176 M-24 SNIPER WEAPONS SYSTEMS

This contracted called for the purchase of 176 M-24 Sniper Weapons Systems to be delivered with spare parts and training. This order was just completed and another order has been received for an additional 79 systems

LEW HORTON DISTRIBUTING
ORDER NUMBER
DATE OF EXECUTION: 2003 scheduled delivery
500 - Model 700 Sniper Rifles – special stock and barrel features – order number xxxxx
500 – Model 700 Sniper Rifles – special stock and barrel features – order number xxxxx
Mike Horton –

This was a special order of the Model 700 Police sniper rifle in two different stock and barrel contour configurations. These rifles will be sold all over the USA through this distributor to law enforcement dealers who in turn will sell them to law enforcement agencies everywhere.

These are just a few of the large volume contracts and orders Remington has serviced that best represents our ability to provide "like products" as called for in this solicitation. No other company in the world supplies sniper rifles and full systems like Remington.

Please let me know if you need further information on Remington's involvement with sniper rifle contract history.

Sincerely,

Gregory A. Foster
Manager, Law Enforcement
And Government Sales

Sincerely,

Gregory A. Foster
Manager, Law Enforcement
And Government Sales

July 28, 2003

Federal Bureau of Investigation
HRT Building
Quantico, VA 22135
Atn. Theresa M. Powell, Contract Specialist

RE: Solicitation – RFP-0026791 308 Winchester Sniper Rifle – TRAINING SECTION

Dear Ms Powell,

The following information provides an overview of the training, maintanence and lesson plans called for in section 10 TRAINING, of this solicitation. In cooperation with Iron Brigade Armory, this information has been designed to support the operation, cleaning and usage of our rifle submission.

Due to the short timeline from announcement to submission, there are areas that we will "tweak" to improvement between now and the award announcement. But I am sure that what is included in this section meet or exceeds the requirements called for in the solicitation.

Should Remington be the successful awardee, Remington armorer's and instructors will be available to deliver this presentation and review of the system submitted.

A

Sincerely,

Gregory A. Foster

PR 1509

Manager, Law Enforcement
And Government Sales

PR 1510

REM00061641

July 28, 2003

Federal Bureau of Investigation
HRT Building
Quantico, VA 22135
Atn. Theresa M. Powell, Contract Specialist

RE: Solicitation – RFP-0026791 308 Winchester Sniper Rifle –Authorized Signatures

Dear Ms Powell,

The following are those persons involved in this contract that either address customer services issues, have authorization to contractually bind the company to this contract or contractually bind the company to technical data from a production standpoint. Mr. Mounce or myself should always be your first point of contact.

Authorized persons involved with this contract: (Immediate contacts)

Customer Services Representative / Order Handling:
Dewayne Mounce, Corporate office
870 Remington Drive
Madison, NC 27025
Phone: 800-852-7634
Fax: 336-548-8798
Email: dewayne.mounce@remington.com

Contract Administrator:
Gregory A. Foster, Corporate office
(as above)
Phone: 336-548-8794
Fax: 336-548-8798
Email: greg.foster@remington.com

PR 1511

Authorized persons involved with this contract: (Signature contacts)

Gregory A. Foster – Mgr. LE/GOV Sales	**336-548-8794**
Ronald H. Bristol, III Vice President – C.O.O.	336-548-8525
Jay M. Bunting, VP Firearms Sales and Marketing	336-548-8729
John Trull – Centerfire Rifle Marketing Manager	336-548-8737

Additional support staff applicable to this solicitation;

Timothy Mc Cormack – Manager, Remington Custom Shop	315-895-3391
Ronald Engell—Manager, Remington Custom Shop	315-895-3448
Thomas Nagle – Manager, Remington Arms Services	315-895-3289

Sincerely,

Gregory A. Foster
Manager, Law Enforcement
And Government Sales

PR 1512

July 28, 2003

Federal Bureau of Investigation
HRT Building
Quantico, VA 22135
Atn. Theresa M. Powell, Contract Specialist

RE: Solicitation – RFP-0026791 308 Winchester Sniper Rifle – Submission Specifications

Dear Ms Powell,

The following information provides a detailed review of all of the features of the Remington 40-XS sniper rifle system proposed for this solicitation. Remington certifies that it meets or exceeds all requirements called for in this solicitation or has noted accordingly were changes have been made.

FBI Sniper Rifle Proposal
"Model 40-XS Deployment Rifle System"
Detailed Specification Information

RECEIVER -- All features of the receiver used in this rifle meet or exceed the specifications called for in this solicitation

- Model 40-X stainless steel right hand short action
- Models 40-XS, M-24 and 700P are all identical in design
- Receiver is milled from a solid block of steel
- Receiver rolled as Remington Model 40-X
- Bolt will have a non-reflective polymer based finish
- Bolt handle will be roll pinned to bolt body
- 5 shot magazine capacity
- Scope mounting holes will be 8-40 threads same as M-24
- Receiver will have a non-reflective polymer based finish
- Serial Number to contain "FBI" prefix
- Receiver will be bedded using a combination of a full length aluminum bedding block and the use of synthetic bedding compound

PR 1513

REM00061644

BARREL-- All features of the barrel used in this rifle meet or exceed the specifications called for in this solicitation

- Stainless steel 24" Model 40-X button rifled barrel with non-reflective polymer based finish
- Chambered for .308 Win (SAAMI Specifications)
- Twist rate 1:10 (SAAMI Specifications) 6-Groove Button Rifled
- Twist rate and caliber rolled on barrel
- Standard 40-X barrel contour
- Protective crown
- Barrel free-floating
- Headspace 1.630" Min. to 1.633" Max.
- Accuracy specification stated as ½ MOA 5-shot group out of box, 1 MOA after 5k rounds

TRIGGER

- Model 700 stainless steel fire control
- Trigger pull set at 3.75 lbs
- Entire trigger assembly is weather impervious
- Trigger is adjustable only by factory or gunsmith

TRIGGER FLOORPLATE ASSEMBLY

- Trigger floorplate assembly is the Sunny Hill all steel model
- Allows for 5 shot magazine capacity. 6 round total capacity
- Trigger floorplate assembly is coated with non-reflective polymer based finish

STOCK

- H.S. Precision Pro Series 2000 Tactical Stock w/ aluminum bedding block
- Adjustable comb
  - Witness marks on stock to serve as adjustment reference points
- Adjustable length of pull
  - Witness marks on stock to serve as adjustment reference points
- 1" rubber recoil pad
- Equipped with standard LE three swivel stud configuration – stud epoxied in place
- Stock color is charcoal gray

SCOPE, MOUNT AND RINGS

- Leupold Vari-X III 3.5-10x40 Long Range M1 scope with Mil-Dot reticle and 30mm tube
- Equipped with Butler Creek Flip-up lens covers (supplied with scope from Leupold)
- Scope lenses are fully multi-coated

PR 1514

- Scope windage and elevation dials are target style and have ¼" MOA click adjustments
- Windage and elevation dials are resetable to zero after sighting in the rifle.
- Zero mark is lockable
- Scope finish is black non-reflective
- Scope is fully waterproof
- Picitinny style scope rail will be from Badger Ordnance Company
- Scope Rings will be from Badger Ordnance Company
- Scope has been mounted and zeroed at 100 yds. prior to shipment

BI-POD (with Pod Lock)

- Rifle utilize a Harris LMS Bi-pod
- To include Pod Loc

SLING

- Rifle will be packed with black synthetic Turner AWS Sling

TOOLS

- Rifle will include tool kit consisting of:
- Torque wrench preset to factory settings with rifle serial number marked on wrench
- Hex wrench to disassemble action from stock with rifle serial number marked on tool
- Kleinendorst style bolt disassembly tool with rifle serial number marked on tool

SYSTEM CASE

- The entire system is packed in a lockable Pelican 1750 style deployment case.
  - Case equipped with atmospheric purge valve
  - Case equipped with integral wheels for travel
  - Case is waterproof, airtight, crush resistant and dust-proof
  - Case will store the complete rifle system and all of its components excluding ammunition, cleaning solvents and replacement parts.

CLEANING ACCESSORIES

- Rifle will include the following cleaning kit items:
- (2) 44" minimum length one piece Dewey coated cleaning rods
- (2) .308 caliber cleaning jags
- (1) .308 caliber bore brush
- (1) .308 caliber bore guide
- (1) Package bore cleaning patches
- (1) M-24 chamber brush
- (1) M-24 small cleaning brush
- (1) M-24 lens cleaning kit

- Cleaning supplies with exception of cleaning rods and bore guide will be included with tools in small M-24 Pelican style deployment kit case included with each rifle system

WARRANTY/REPLACEMENT PARTS

- In addition to Remington's standard warranty, each weapon under this contract are guaranteed for a minimum service life of 50,000 rounds on the receiver and 5,000 rounds on the barrel with proper cleaning and maintenance. Detailed cleaning, maintenance, and lubrication instructions are listed in the Operator's Manual included with each system. These procedures should be followed after each deployment, training exercise, or 90 days of inactivity.
- The following components are considered to be "high-stress" components and are recommended to be replaced every 10,000 rounds. Sufficient replacement "high-stress" components (Qty. 5 of each component) are included with each system to insure a total system life of 50,000 rounds
  - Firing Pin Assembly
  - Extractor
  - Ejector
  - Ejector Pin
  - Ejector Spring
  - Magazine Follower
  - Magazine Follower Spring
  - Front Guard Screw
  - Rear Guard Screw
  - Bolt Stop
  - Bolt Stop Pin
  - Sear Pin

CRITICAL COMPONENT SERVICE LIFE

- Listed below is the anticipated service life of the critical components of the Model 40-XS rifle
  - Receiver - 50,000 Rds
  - Barrel - 5,000 Rds
  - Trigger Assmb. -

MAINTENANCE INFORMATION

- Each rifle will be shipped with a laminated sheet with detailed recommended scheduled maintenance/service schedule on front and anticipated service life of the following critical components on the rear (can be more than one sheet if needed):
  - Extractor
  - Ejector and components
  - Fire Control
  - Internal/external magazine parts
  - Firing pin
  - All springs

- Barrel (minimum required service life 5k rounds)
- Receiver (minimum required service life 50k rounds)

SPARE PARTS AND SERVICE LIFE INFO

- Each rifle will include spare parts to take rifle to its specified service life
  - Spare parts should be packed with tools and cleaning supplies if possible.
  - Each spare part package should be labeled with part number, description and quantity included

OPERATORS MANUAL

- Each rifle will include a operators manual specific to the 40-XS

MISCELLANIOUS LITERATURE AND MANUALS

- Any and all manuals/literature packed with any and all components must be placed in an envelope marked as "Component Literature" and packed with system.

Gregory A. Foster
John Trull
Timothy McCormack
Ron Engell
Tommy Nagle

PROPOSAL FOR

DEPARTMENT OF HOMELAND SECURITY
FEDERAL BUREAU OF INVESTIGATION
308 WINCHESTER
SNIPER RIFLE
SOLICITATION
RFP0029761

OFFER DUE DATE
July 30, 2003 1600 HRS EST
(revised)

Presented by:

REMINGTON ARMS COMPANY, Inc.
870 Remington Drive
Madison, NC 27025
336-548-8899 (Law Enforcement Division)
Fax: 336-548-8798

July 28, 2003

Federal Bureau of Investigation
HRT Building
Quantico, VA 22135
Atn. Theresa M. Powell, Contract Specialist

RE: Solicitation – RFP-0026791 308 Winchester Sniper Rifle – Cover Letter

Dear Ms Powell,

Remington Arms Company is pleased to submit the following proposal and pricing in accordance with solicitation RFP-0026791. Remington Arms Company agrees to comply with all terms, conditions and provisions included in this solicitation unless otherwise noted elsewhere in this proposal.

Remington product descriptions, order numbers and pricing comply with all requirements of this solicitation and are noted within this proposal. While this is a solicitation calling for an off the shelf commercial product, Remington has designed a rifle system to meet the specific requirements noted in this solicitation. It so happens we do not have a commercial item in our line exactly fitting the requirements noted herein. Therefore, our literature included on our proposal is for general reference to our current sniper rifles in our product line offering. This is for general reference only.

GENERAL PROPOSAL PRODUCT DESCRIPTIONS AND CERTIFICATIONS

The product proposed in this solicitation meets or exceeds the specifications called for within the "specifications section " (pgs.5 - 13) of this solicitation. Remington certifies that we are in total compliance with all SAAMI and ANSI standards for firearms manufacturing. We would also certify that Remington's internal control plans meet the intent of the sampling and quality control requirements specified in this solicitation.

The basic rifle provided in this proposal and the assembly of this entire weapons system will be conducted in our Ilion, NY firearms manufacturing facility.

Detailed information about each specification submitted is provided within the technical section of this proposal.

Authorized persons involved with this contract:

Customer Services Representative / Order Handling:

Dewayne Mounce, Corporate office
870 Remington Drive
Madison, NC 27025
Phone: 800-852-7634
Fax: 336-548-8798
Email: dewayne.mounce@remington.com

Contract Administrator:

Gregory A. Foster, Corporate office
(as above)
Phone: 336-548-8794
Fax: 336-548-8798
Email: greg.foster@remington.com

Several last and final points and comments:

- DUNS #00-145-3216
- RAC TIN #: 51-035-0935
- CCR – TPIN number is 1998D227318
- CAGE Code – 50446
- Facility Code – 3A703
- Remington meets or exceeds all FAR regulations called for in this solicitation
- Our Proof of Liability certificate is provided within its own proposal section
- Our Certifications and Representations compliance is included in its own section within this proposal
- A copy of our Remington company wide sub-contracting plan is located within its own section as called for in part 17 of the Descriptions and Specifications section. Remington, although somewhat limited in sourcing opportunities due to large volumes of raw materials required in the production of our products, strives to utilize small business operations, women owned businesses, handicapped workers and disabled veterans whenever and wherever possible. Our company wide target objectives are in compliance with all federal requests.
- Remington has teamed up with IRON BRIGADE ARMORY as a consultant to assist with the development and review of this proposal. IBA is not only the leading sniper rifle builder in the USA but is also a Small, Disabled Veterans business further supporting our subcontracting plan commitment
- Payment "Remit To" is as follows:

Remington Arms Company, Inc.
PO Box 503810
St. Louis, MO 63150-3810
Electronic payment processing is available

- All firearms products are produced at or firearms facility:

Remington Arms Company, Inc
14 Hoefler Avenue
Ilion, New York 13357

Final comments continued;

- All packaging and package marking requirements will be adhered to in accordance with the guidelines defined in this solicitation
- All delivery requirements will be adhered to in accordance with the guidelines defined in this solicitation
- Samples have been shipped as required to the HRT facility at Quantico as called for and are FULL AND COMPLETE representative samples of the product Remington will deliver should we be the winner of this solicitation. They have been individually tested for structural integrity and are in full compliance of all SAAMI requirements.

Thank you for the opportunity to bid on this solicitation. Please contact me at the address listed above if you have any questions. And as always thank you for your continued support of Remington Law Enforcement and Military products.

Sincerely,

Gregory A. Foster
Manager, Law Enforcement
And Government Sales

July 28, 2003

Federal Bureau of Investigation
HRT Building
Quantico, VA 22135
Atn. Theresa M. Powell, Contract Specialist

RE: Solicitation – RFP-0026791 308 Winchester Sniper Rifle – Technical Information

Dear Ms Powell,

Within this technical proposal section, many of the solicitation requirements are being identified, described and defined. In the following paragraphs, I will be providing information that is called for in the Technical Proposal guidelines a thru m. As one of these requirements is answered within the content of requirement c – company background, I will identify this fulfillment by noting the guideline addressed.

The following is a brief description and profile of the Remington Arms Company.

In 1816, legend has it that a young Eliphalet Remington II, believed he could build a better gun than he could buy, and he set out to craft such a gun on his father's forge, located at Ilion Gulch, New York. Due to the popularity of his rifle, production began and in no time, young Remington was in the gun manufacturing business.

In 1828, Remington moved its operation from Ilion Gulch to a site close to the newly constructed Erie Canal. Our production facility still stands at this same site, to this date, even though the Erie Canal has since been re-directed away from along-side our building.
This site location is in Ilion, New York.

By 1865, Remington Arms Company was producing hammerless solid breach repeating shotguns and the first hammerless auto-loading shotgun. Also new in the line was the first successful high-power slide action repeating rifle and the first lock breach auto-loading rifle. Also in this time frame, Remington produced the state-of-the-art Rolling Block Rifle.

In 1867, Remington acquired the Union Metallic Cartridge Company in Bridgeport Connecticut. State of the Art manufacturing and technological breakthroughs in shotshell, rifle and pistol ammunitions were achieved.

Over the years, a multiple of other products were manufactured, including typewriters, handguns, trap and skeet machines, power tools, bicycles and electric razors.

In 1980, E. I. Dupont Company purchased the remaining shares of Remington stock and Remington became a totally-owned subsidiary. The corporate headquarters was relocated from Bridgeport Connecticut to Wilmington, Delaware until 1993.

In 1993, Dupont sold the assets of Remington to RACI Acquisitions, a company organized by the New York Investment firm of Clayton, Dubilier and Rice. In 1995, Remington moved its corporate headquarters from Wilmington, Delaware to Rockingham County, North Carolina. Our corporate headquarters is still located in Madison, North Carolina today.

In January of 2003, Clayton, Dubilier and Rice sold its controlling interest in RACI Acquisitions to Bruckman, Rosser and Sherrill. CDR still maintains a major investment interest in Remington, but BRS now has controlling interest.
No changes to the way we do business are foreseen in the near future.

Site locations are as follows:

- Ilion Firearms Manufacturing Plant, Ilion, New York
- Ammunitions and Components Manufacturing Plant, Lonoke, Arkansas
- Mayfield Firearms Plant, Hickory, Kentucky
- Findlay Target Plant, Findlay, Ohio
- Ada Target Plant, Ada, Oklahoma
- R & D Technical Center, Elizabethtown, Kentucky
- Law Enforcement and Government Sales Division, Madison, North Carolina
- Worldwide Corporate Headquarters, Madison, North Carolina

Remington Arms Company, Incorporated, has approximately 2700 full time employees. We sell our sporting goods and law enforcement products worldwide, with annual company sales of approximately $450 million dollars.

The Law Enforcement and Government Sales division will be directly involved with this project. This division is solely responsible for the sales of applicable law enforcement firearms, ammunitions and accessories to all federal, state, local and private security as well as all military sales. We sell in excess of 3,000 sniper rifles per year aside from contracts such as listed in the "previous contracts" section.(f)

Our division has been and is involved with major domestic and military firearms and ammunition sales within all branches of the US Military. Currently we are supplying 2400 pump shotguns to the US Coast Guard. Federal agency contracts like the 6,000 shotguns recently sent to the INS and 5 MM rounds of misc. ammunition sent to the Federal Law Enforcement Training Center are just a tip of our agency iceberg involvement. (c,f)

OUR PRODUCT SUBMISSION: 40XBF .308 Win Sniper Weapons System

This particular rifle will be produced in our main centerfire rifle manufacturing facility in Ilion, New York.(a.) The base technology for our submission is derived from the legendary Model 700 barreled action. The hand made custom shop version of this barreled action is called the 40-XB.

Innovative rifle technology (d) includes:

- Internal bolt face design extractor
- All steel receiver
- Three rings of solid steel supporting the cartridge head for solid cartridge lock up
- Button rifling process
- New for 2003 – R-3 Recoil pad to extra recoil absorption
- Usage of full aluminum bedding block in the synthetic stock along with complete barreled action bedding support process

The rifle being proposed for this solicitation has been designed and will be constructed at our Ilion New York facility within the Custom shop, should we be awarded this contract. (a, k.) Our custom shop, by design, specializes in the building and assembly of special order packages as called for in this solicitation. Projects include commemorative shotguns for the OK Highway patrol, Commemorative Tribute Shotguns and Rifles for NASCAR Legends and in 2003 two specially designed sniper rifles for the Lew Horton Distributing company - 500 each rifles of each design. (c, f)

In excess of 130 years of employee experience is involved in the preparation, production and support of the product proposed in this project. The following are the primary persons responsible for the design, development, production and execution of this product: (h)

PRODUCTION FACILITY SUPPORT – ILION, NY:
Our custom shop consists of 12 employees of which 2 are the primary participants in this project.
Timothy J. McCormack – Manager, Custom Shop, has been in charge of our custom firearms shop for 19 years. As a 38 year employee of Remington, Tim has overseen hundreds of specialty rifle and shotgun projects. He also is responsible for marketing functions, quality control, chemical / metallurgical control, material / processing development and process

Ronald J. Engell is the Custom Shop supervisor. Ron's 36 years with the company and 14 years in the custom shop have exposed him numerous projects with technical demands like those noted in this solicitation. He has also been responsible for the Model 700 rifle sub-assembly, gallery testing and rifle final inspection during his career.

Other primary product support:
Thomas J. Nagle is our Supervisor, Parts and Repairs. He is a 29 year employee and has been involved in numerous positions during in this career. He is currently responsible for managing all repairs conducted in-house, all part orders shipped to customers, resolve customer complaints, as well as managing government contracts regarding the M-24 Sniper Weapons System to both US and foreign governments. Tom is also a fully qualified gunsmith, armorer and firearms instructor.

PRIMARY CORPORATE SUPPORT—MADISON, NC:

Gregory A. Foster is the Manager of the Law Enforcement and Government Sales division. A 23 year employee with Remington, Greg has been in field sales all over the United States. He has been the ammunition division product manager and had now headed the sales and marketing efforts for the military and law enforcement products (firearms, ammunition and accessories) for the last 10 years. He is also a firearms instructor, Remington trained gunsmith and conducts Remington product seminars both nationally and internationally.

John Trull has been the Product Manager, Firearms Marketing for 4 years.
XXXXXXXXXXXXXXXXXXXXXXXX

Dewayne Mounce is our Law Enforcement Customer Service specialist who will handle all order entry and customer service. As a Remington employee for 10 years, Dewayne has been involved in numerous contracts for firearms and ammunition of this magnitude. Dewayne will be the first line of support in that he will handle all order entry, coordinate all shipping and handle all invoicing.

OUTSIDE SUPPORT:

In an effort to strengthen our offering to the FBI, Remington incorporated the support of Lt. Col. Norm Chandler, Sr. (US Marine Corp – retired), president of Iron Brigade Armory and his staff. IBA is world renowned for their custom sniper rifles, instructional training expertise and unmatched print documentation about the world of precision sniping. Teaming up the worlds largest sniper rifle manufacturer and custom sniper rifle builder will provide the FBI with a product that meets or exceeds the work previously accomplished by FBI sniper rifle builders themselves.

PACKAGE ADD ON AFTERMARKET PRODUCTS:

The following is a list of the major non-Remington products used in this package. You will not find ANY products used in this system are not the number one or number 2 in their specialized product fields.

LEUPOLD – Scope
PELICAN – Hard shell case
H-S PERCESSION – Stock
BUTLER CREEK – Scope covers
TURNER – Sling
SUNNY HILL- Trigger guard
BADGER – Mount and rings
HARRIS – Bi-po
J. DEWEY MFG. CO.– Cleaning supplies
STONEY POINT –Cleaning supplies
KLEINENDORST – Bolt Tool

FINANCIAL STABILITY:

Included in the cover letter is our Dunn and Bradstreet number which can be used to verify the financial stability of Remington Arms Company, Inc.. You can also verify our financial stability via our primary bank:
XXXXXXXXXXXX
XXXXXXXXXXXX
XXXXXXXXXXXX BONNIE FILL THIS IN PLEASE

I hope this information provides you with a snapshot view of our company and the resources assembled to not only present this proposal but will be used in the building of this system should we win this solicitation.

What I can assure you is that there is no other company with the size, history, resources, financial stability, production facility and expertise out there world wide that can fulfill all the requirements called for in this solicitation any better than Remington Arms Company, Inc.. The FBI is totally familiar with our products and the support we offer on any and all firearms and ammunition products due to the extensive usage of our products within the agency today.

Please feel free to contact me if I can provide any additional information or assistance.

Sincerely,

Gregory A. Foster
Manager, Law Enforcement
And Government Sales

PR 1526

This M-24 contract from the mid-90's resulted in initial sales of 5500 sniper rifle packages as well as over an additional 3000 packages sold over the years to our own military as well as foreign military groups. (c,f) The government of Israel have purchased over 1200 M-24 packages in the past few years.

While not as detailed as the specifications called for in this solicitation, part of our law enforcement line firearms offering is our 700P Police Tactical Weapons System. This system consists of a scoped rifle with added deployment accessories in a hardshell case ready for use. We sell hundreds of these basis sniper rifle systems annually.

Our years of sales focus on the police and military sniper rifle markets have allowed us to gather tremendous knowledge about what works and what does not work, not only with our own rifle but the aftermarket products that can be used with it. As we have participated in these contracts and proposals, we have strengthened our own internal product offerings. (c)

For example, we learned the value of using the aluminum bedding blocks in the stocks to enhance strength and accuracy from our US Army M-24 contract work. We then incorporated that into our regular line 700P, 700P LTR and 40 XB Tactical sniper rifles. We use this same knowledge and technical education in the product we are proposing for this FBI solicitation. Details of technological achievements and advantage go right down to the screw sizes in the receiver scope base mounts.

Our Model 700 receiver is very well known in the police and military markets for it durability and reliability. It I the current receiver used on the FBI's tactical rifles as well as other groups such as the US Marine Corp M40 and the US Army M-24. More technical detail will be listed in the proposal specifications section.

Remington's successful market position and continued leadership in this industry in itself is proof of financial stability. However I will also state that we have posted successfully profits for the last XXXXX years as a company and are rated in the top XXXX put some words in here – talk to little.

The section to follow is dedicated specifically to the product being offered in this proposal to meet the requirements spelled out. I believe you will find we have met and in many cases, far exceeded the requirements called for.

There is no doubt that while the Remington M-24 Sniper Weapons System, developed for the US Army in the 9990's established the foundation for rifle systems of the 90's and early 2000. The product offered in this proposal, win or loose, will be the foundation for sniper systems in the US and abroad for the next 10 years.

Sincererly.

Gregory A. Foster
Manager, Law Enforcement
And Government Sales

In 1816, legend has it that a young Eliphalet Remington II, believed he could build a better gun than he could buy, and he set out to craft such a gun on his father's forge, located at Ilion Gulch, New York. Due to the popularity of his rifle, production began and in no time, young Remington was in the gun manufacturing business.

In 1828, Remington moved its operation from Ilion Gulch to a site close to the newly constructed Erie Canal. Our production facility still stands at this same site, to this date, even though the Erie Canal has since been re-directed away from along-side our building. This site location is in Ilion, New York.

By 1865, Remington Arms Company was producing hammerless solid breach repeating shotguns and the first hammerless auto-loading shotgun. Also new in the line was the first successful high-power slide action repeating rifle and the first lock breach auto-loading rifle. Also in this time frame, Remington produced the state-of-the-art Rolling Block Rifle.

In 1867, Remington acquired the Union Metallic Cartridge Company in Bridgeport Connecticut. State of the Art manufacturing and technological breakthroughs in shotshell, rifle and pistol ammunitions were achieved.

Over the years, a multiple of other products were manufactured, including typewriters, handguns, trap and skeet machines, power tools, bicycles and electric razors.

In 1980, E. I. Dupont Company purchased the remaining shares of Remington stock and Remington became a wholey-owned subsidiary. The corporate headquarters was relocated from Bridgeport Connecticut to Wilmington, Delaware until 1993.

In 1993, Dupont sold the assets of Remington to RACI Acquisitions, a company organized by the New York Investment firm of Clayton, Dubilier and Rice. In 1995, Remington moved its corporate headquarters from Wilmington, Delaware to Rockingham County, North Carolina. Our corporate headquarters is still located in Madison, North Carolina today.

In January of 2003, Clayton, Dubilier and Rice sold its controlling interest in RACI Acquisitions to Bruckman, Rosser and Sherrill. CDR still maintains a major investment interest in Remington, but BRS now has controlling interest.
No changes to the way we do business are foreseen in the near future.

Site locations are as follows:

- Ilion Firearms Manufacturing Plant, Ilion, New York
- Ammunitions and Components Manufacturing Plant, Lonoke, Arkansas
- Mayfield Firearms Plant, Hickory, Kentucky
- Findlay Target Plant, Findlay, Ohio
- Ada Target Plant, Ada, Oklahoma
- R & D Technical Center, Elizabethtown, Kentucky
- Law Enforcement and Government Sales Division, Madison, North Carolina
- Worldwide Corporate Headquarters, Madison, North Carolina

Remington Arms Company, Incorporated, employs approximately 2700 full time employees. We sell our sporting goods and law enforcement products worldwide with an annual company sales of approximately $450 million dollars.

The Law Enforcement and Government Sales division will be directly involved with this project. This division is solely responsible for the sales of applicable law enforcement firearms, ammunitions and accessories to all federal, state, local and private security as well as all military sales.

Our division has been and is involved with major domestic and military firearms and ammunition sales within all branches of the US Military. Currently we are supplying 2400 pump shotguns to the US Coast Guard. Federal agency contracts like the 6,000 shotguns recently sent to the INS and 5 MM rounds of misc. ammunition sent to the Federal Law Enforcement Training Center are just a tip of our agency iceberg involvement.

Remington remains on the cutting edge of newly developed firearm and ammunition technology. Our involvement with The Wexford Group will allow us to assist in getting ideas from paper to field use in a very short timeframe.

Within the Wexford proposal is additional information about our company, past performance of applicable contracts and technological advancements that we believe will assist in better equipping the soldier in the field.

You can also go on line to Remington.Com or RemingtonLE.com for detailed information about our company and the products we offer.

Additional business information:

- CAGE Code – 50336
- CCR# 3A703
- DUNS #00-145-3216
- Sub-Contracting Plan on file

Please feel free to contact me if I can provide any additional information or assistance.

Sincerely,

Gregory A. Foster

Gregory A. Foster
Manager, Law Enforcement
And Government Sales

PR 1530

REM00061661

July 28, 2003

Federal Bureau of Investigation
HRT Building
Quantico, VA 22135
Atn. Theresa M. Powell, Contract Specialist

RE: Solicitation – RFP-0026791 308 Winchester Sniper Rifle – Subcontracting Plan

Dear Ms Powell,

A copy of our Remington company wide sub-contracting plan follows this cover letter. This is called for in part 17 of the Descriptions and Specifications section. Please feel free to contact us if you desire a breakdown in dollars based on the volumes associated with this solicitation.

Remington, although somewhat limited in sourcing opportunities due to large volumes of raw materials required in the production of our products, strives to utilize small business operations, women owned businesses, handicapped workers and disabled veterans whenever and wherever possible. Our company wide target objectives are in compliance with all federal requests.

Remington has teamed up with IRON BRIGADE ARMORY as a consultant to assist with the development and review of this proposal. IBA is not only the leading sniper rifle builder in the USA but is also a Small, Disabled Veterans business further supporting our subcontracting plan commitment

Sincerely,

Gregory A. Foster
Manager, Law Enforcement
And Government Sales

PR 1531

Danny Evans

From: Evans, Danny
Sent: 12/17/2003 05:13:59 PM
To: 'dwills@smbtrials.com'
CC:
BCC:
Subject: 700 SMP Program

Dale,
During your visit to the office last week, we briefly discussed the continuation of the 700 SMP (Safety Modification Program).

During that conversation, we basically determined that we would change the date to continue through 12/31/04 and then review again
at end of next year.
I talked with Ron about this & he is agreement.
My next question is, do we need to continue to offer the rebate certificates as part of the program.
These rebate forms are all dated, and we would need to have re-printed.

The bigger issue is,,,many consumers have misinterpreted the rebate, believing that they were going to get a coupon which was good for $20
toward the purchase of these items, when in fact they have to purchase the accessories then submit the form for a rebate.
In other words, they have to spend $40 to get $20 back.

The other issue is many consumers have had difficulty in locating the items that we have listed.
I have personally handled a number of these calls, and have found that it has created frustration at the consumer level.

Can we simply eliminate the rebate portion of the program, and offer the modification for the $20?
Ron ask me to run this by you.

Daniel C. Evans
Service Operations Manager
Remington Arms Company, Inc.
870 Remington Drive
P.O. Box 700
Madison, North Carolina 27025-0700
Phone: (336)548-8701
Fax: (336)548-7899
E-mail: Danny.Evans@Remington.com
Visit Remington Country at www.Remington.com

PR 1665

Danny Evans

From: Evans, Danny
Sent: 12/30/2003 07:22:01 AM
To: 'dwills@smbtrials.com'
CC:
BCC:
Subject: RE: 700 SMP Program

Dale,
Have you given any thought to below.....

> -----Original Message-----
>From: Evans, Danny
>Sent: Wednesday, December 17, 2003 5:14 PM
>To: 'dwills@smbtrials.com'
>Subject: 700 SMP Program
>
>Dale,
>During your visit to the office last week, we briefly discussed the continuation of the 700 SMP (Safety Modification Program).
>
>During that conversation, we basically determined that we would change the date to continue through 12/31/04 and then review again
>at end of next year.
>I talked with Ron about this & he is agreement.
>My next question is, do we need to continue to offer the rebate certificates as part of the program.
>These rebate forms are all dated, and we would need to have re-printed.
>
>The bigger issue is,,,many consumers have misinterpreted the rebate, believing that they were going to get a coupon which was good for $20
>toward the purchase of these items, when in fact they have to purchase the accessories then submit the form for a rebate.
>In other words, they have to spend $40 to get $20 back.
>
>The other issue is many consumers have had difficulty in locating the items that we have listed.
>I have personally handled a number of these calls, and have found that it has created frustration at the consumer level.
>
>Can we simply eliminate the rebate portion of the program, and offer the modification for the $20?
>Ron ask me to run this by you.
>
>
>
>
>Daniel C. Evans
>Service Operations Manager
>Remington Arms Company, Inc.
>870 Remington Drive
>P.O. Box 700
>Madison, North Carolina 27025-0700
>Phone: (336)548-8701
>Fax: (336)548-7899
>E-mail: Danny.Evans@Remington.com
>Visit Remington Country at www.Remington.com
>
>

PR 1666

PR 1667

Danny Diaz

From: Trull, John
Sent: 06/23/2005 12:51:57 PM
To: Cohen Anne; Wills,Dale
CC: Bristol II, Ronald H; Campbell, Don H.; Ronkainen, Jim; Diaz, Danny; Perniciaro, Stephen
BCC:
Subject: SPL Trigger Assembly Review 6-21-05.ppt

Anne and Dale,

Attached is a revised presentation that reflects our discussion earlier today.

Best Regards,

John Trull

PR 2204

Model 700/Model Seven Trigger Assembly Review (Safety Pivoted Link Design)

PR 2205

Safety Pivoted Link Design Highlights

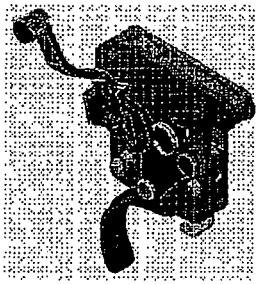

- Features
  - Improved out-of-the-box feel
  - Better surface finish on key components for crisper trigger pull
  - Designed to accommodate all products in the Model 700 and Model Seven families
  - Design allows for lower trigger pull settings from the factory
  - Enhanced corrosion resistance
  - Operates like current fire control
  - Safety blocks sear and trigger
  - Trigger pull adjustable by Authorized Repair Centers

PR 2206

How The SPL Trigger Assembly Works

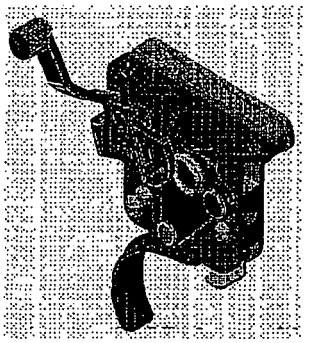

Remington Arms Confidential

PR 2207

Safety in SAFE Position

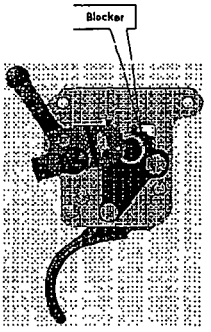

With the safety in the SAFE position, the blocker ensures the trigger is blocked and under the sear while the sear safety cam is supported by the safety.

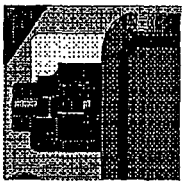

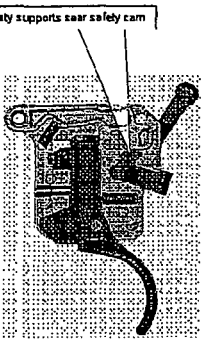

Left hand side plate and bolt stop omitted for clarity in this view

Remington Arms Confidential

PR 2208

Safety in FIRE Position

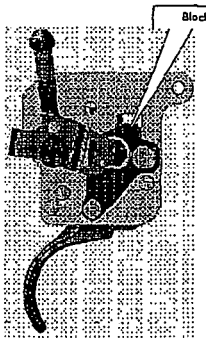

With the safety in the FIRE position, the blocker moves away from the front of the trigger and the safety lowers the sear safety cam on top of the trigger.

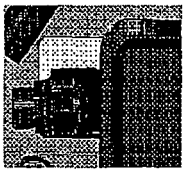

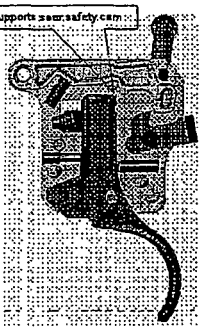

Left hand side plate and bolt stop omitted for clarity in this view

Remington Arms Confidential

5

PR 2209

Trigger Assembly - Fired

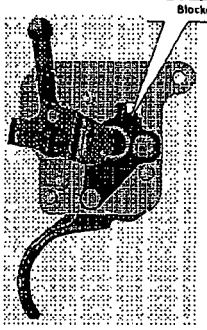

When the trigger is pulled with the safety in the FIRE position, the trigger rotates from beneath the sear safety cam and allows it to drop, releasing the firing pin. Forward motion of the trigger is stopped by the blocker.

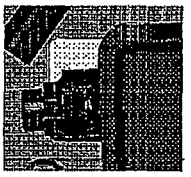

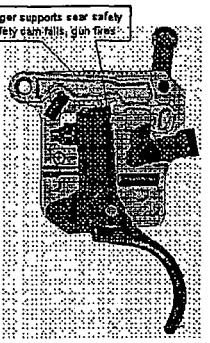

Left hand side plate and bolt stop omitted for clarity in this view

Remington Arms Confidential

5

PR 2210

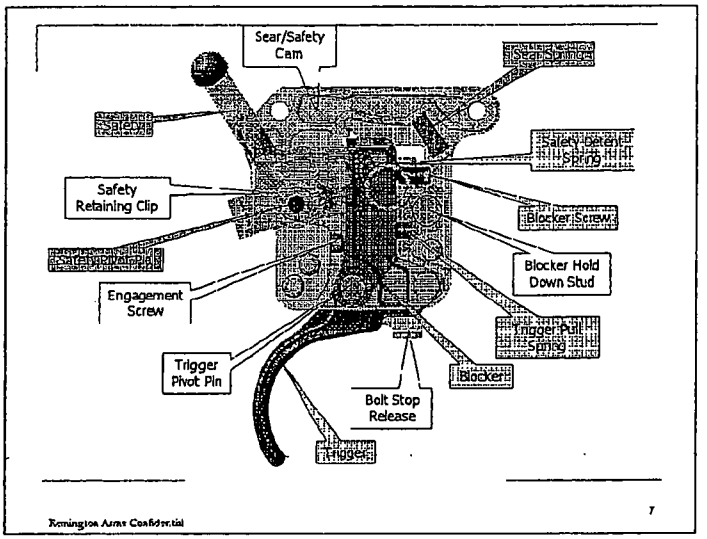

PR 2211

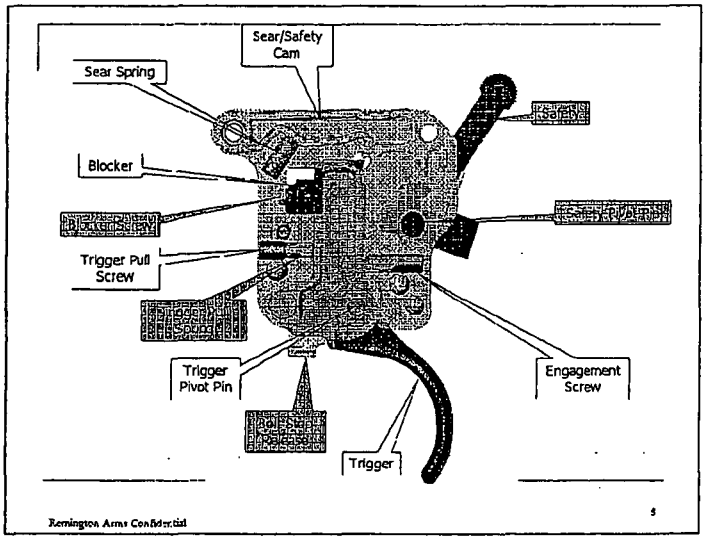

PR 2212

Linda Powell

From: Trull, John
Sent: 06/23/2005 02:52:05 PM
To: Powell, Linda
CC:
BCC:
Subject: FW: SPL Trigger Assembly Review 6-21-05.ppt

John C. Trull

Marketing Manager - Firearms Division

Remington Arms Company, Inc.

P.O. Box 700

870 Remington Drive

Madison, NC 27025-0700

(336) 548-8737 - Phone

(336) 209-4064 - Mobile

(336) 548-7737 - Fax

john.trull@remington.com

From: Trull, John
Sent: Thursday, June 23, 2005 12:52 PM
To: Cohen Anne; Wills,Dale
Cc: Bristol II, Ronald H; Campbell, Don H.; Ronkainen, Jim; Diaz, Danny; Perniciaro, Stephen
Subject: SPL Trigger Assembly Review 6-21-05.ppt

Anne and Dale,

Attached is a revised presentation that reflects our discussion earlier today.

Best Regards,

PR 2213

John Trull

PR 2214

Model 700/Model Seven Trigger Assembly Review (Safety Pivoted Link Design)

Remington Arms Confidential

1

PR 2215

7/20/2006

1

Safety Pivoted Link Design Highlights

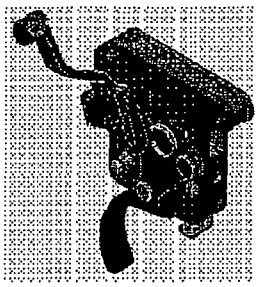

- Features
  - Improved out-of-the-box feel
  - Better surface finish on key components for crisper trigger pull
  - Designed to accommodate all products in the Model 700 and Model Seven families
  - Design allows for lower trigger pull settings from the factory
  - Enhanced corrosion resistance
  - Operates like current fire control
  - Safety blocks sear and trigger
  - Trigger pull adjustable by Authorized Repair Centers

PR 2216

7/20/2006

2

How The SPL Trigger Assembly Works

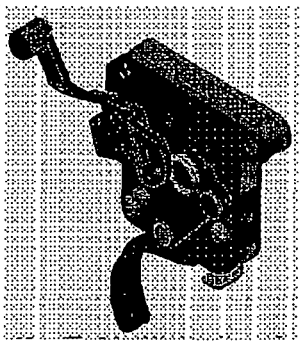

Remington Arms Confidential

3

PR 2217

Safety in SAFE Position

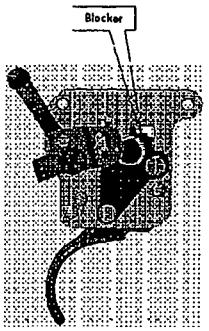

With the safety in the SAFE position, the blocker ensures the trigger is blocked and under the sear while the sear safety cam is supported by the safety.

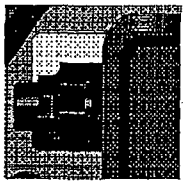

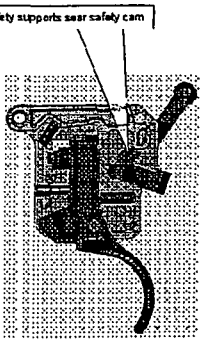

Left hand side plate and bolt stop omitted for clarity in this view

Remington Arms Confidential

4

PR 2218

7/20/2006

4

Safety in FIRE Position

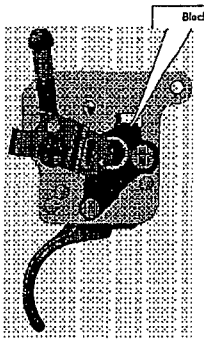

With the safety in the FIRE position, the blocker moves away from the front of the trigger and the safety lowers the sear safety cam on top of the trigger.

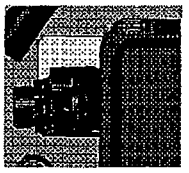

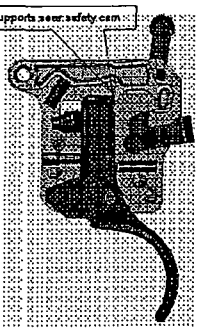

Left hand side plate and bolt stop omitted for clarity in this view

Remington Arms Confidential

5

PR 2219

Trigger Assembly - Fired

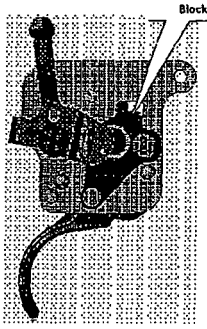

When the trigger is pulled with the safety in the FIRE position, the trigger rotates from beneath the sear safety cam and allows it to drop, releasing the firing pin. Forward motion of the trigger is stopped by the blocker.

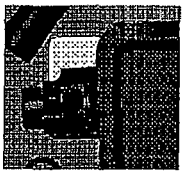

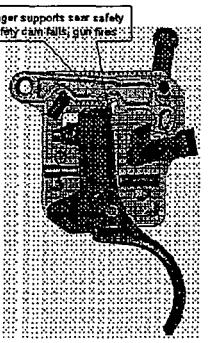

Left hand side plate and bolt stop omitted for clarity in this view

5

Remington Arms Confidential

PR 2220

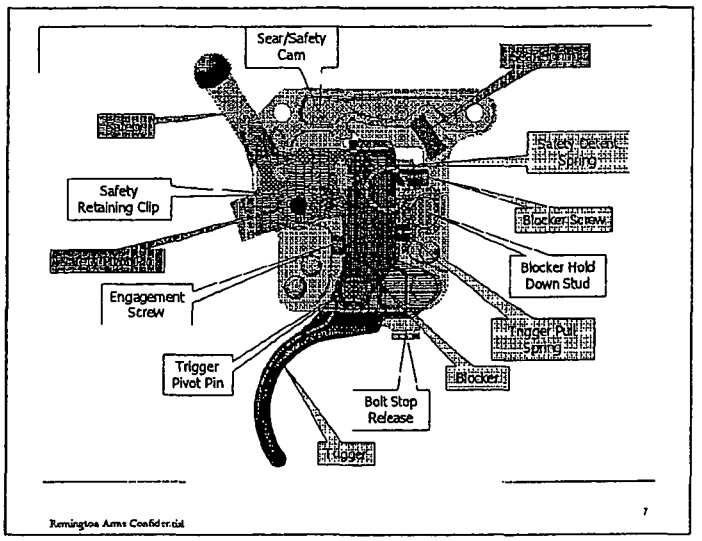

PR 2221

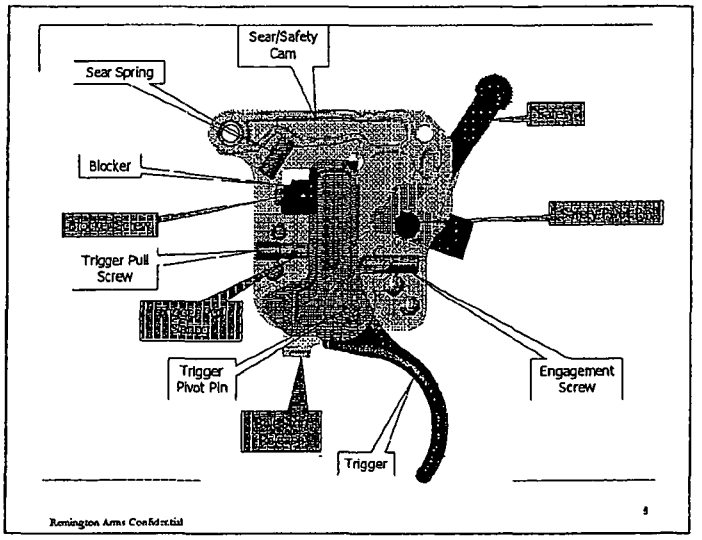

PR 2222

Fred Supry

From: Supry, Fred L.
Sent: 09/07/2005 03:38:25 PM
To: 'Dale Wills'
CC:
BCC:
Subject: RE: Remington 700 LSS fires when you take it off safe

Not as far as I know. I've joined the website and will check the members profile from my home computer.

Fred Supry, Manager
Product Service and Law Enforcement Training
Remington Arms Company
14 Hoefler Avenue
Ilion, NY 13357

Phone: 315-895-3606
Fax: 315-895-3661
e-mail: fred.supry@remington.com

-----Original Message-----
From: Dale Wills [mailto:dwills@smbtrials.com]
Sent: Wednesday, September 07, 2005 9:34 AM
To: Supry, Fred L.; Evans, Danny
Cc: Cohen, Anne E.
Subject: Remington 700 LSS fires when you take it off safe

Fred,

Has this person from Waldorf, MD been in contact with you about his FSR claim?

Dale
http://forum.hunting.net/asppg/tm.asp?m=1191601&mpage=1&key=
<<Remington 700 LSS fires when you take it off safe.url>>

Fred Supry

From: Dale Wills
Sent: 09/07/2005 09:34:28 AM
To: Supry, Fred L.; Evans, Danny
CC: Cohen, Anne E.
BCC:
Subject: Remington 700 LSS fires when you take it off safe

Fred,

Has this person from Waldorf, MD been in contact with you about his FSR claim?

Dale
http://forum.hunting.net/asppg/tm.asp?m=1191601&mpage=1&key=
<<Remington 700 LSS fires when you take it off safe.url>>

This Email has been scanned for Viruses and Spam by an E500 McAfee Engine

PR 2288

Fred Supry

From: Supry, Fred L.
Sent: 11/17/2005 03:25:04 PM
To: Perniciaro, Stephen
CC:
BCC:
Subject: FW: Litigation-related document retention

Fred Supry, Manager

Product Service and Law Enforcement Training

Remington Arms Company

14 Hoefler Avenue

Ilion, NY 13357

Phone: 315-895-3606

Fax: 315-895-3661

e-mail: fred.supry@remington.com

From: Evans, Danny
Sent: Thursday, November 17, 2005 9:34 AM
To: Longo, Robert W.; Loschin, John; Nagle, Thomas J.; Supry, Fred L.; Nickerson, E. Ken; Spradling, Jason; Pearson, Todd A.; Watson, Laura M.; Claybrook, Dana
Cc: Anderson, Julie; Kilts, Rick
Subject: FW: Litigation-related document retention

See message below....please do not forward the attached to your dept personnel but provide directive as noted to maintain records of 710 related issues.

This would be consistent with the Boston retention, that we have been dealing with for years.

Let me know if you have questions

From: Bristol II, Ronald H
Sent: Thursday, November 17, 2005 8:49 AM

PR 2335

REM00079346

To: Cahan, Paul L.; Rink, Charles P.; Evans, Danny; Campbell, Don H.; Dwyer, John; Lance, Kevin D.; Diaz, Danny; Schluckebier, David; Franz, Scott
Cc: Millner, Tommy; Little, Mark; Dale Wills (dwills@smbtrials.com); aecohen@debevoise.com
Subject: Litigation-related document retention

Please read the attached and forward according to the instructions included within

Any questions please call me

thanks

PR 2336

REM00079347

PRIVILEGED AND CONFIDENTIAL
ATTORNEY/CLIENT PRIVILEGE
ATTORNEY WORK PRODUCT

To:

Ammunition Manufacturing	(Lonoke)	Cahan/Rink
Ammunition Sales and Marketing	(Madison)	Dwyer
Armorer's School/Field Service	(Ilion & Madison)	Evans
Consumer Service	(Lonoke & Madison)	Evans/Rink
Arms Service and Product Service	(Ilion)	Evans
Engineering	(Elizabethtown, Ilion & Lonoke, Mayfield)	Cahan
Firearms Sales and Marketing	(Madison)	Campbell
Firearms Manufacturing	(Ilion & Mayfield)	Cahan, Lance
Research & Development	(Elizabethtown & Lonoke)	Cahan, Diaz, Schlukebier, Franz

From: Ronald H. Bristol, II
Executive Vice President and Chief Operating Officer

Date: November 15, 2005

Re: Litigation-Related Document Retention

Remington is from time to time involved in products liability lawsuits involving the company's firearms and ammunition products. This is a reminder that regular records retention periods for company records (including both hard and electronic copies and records) do not apply to any materials (i.e., these records are to be kept until further notice) containing information on any of the following topics relating to Remington firearms (both domestically and internationally sourced) and ammunition:

- Alleged accidental discharges, barrel or other bursts, and other potentially safety-related incidents relating to firearms
- The design, manufacture or performance of fire control and safety mechanisms (including component parts) of firearms
- The design, manufacture or performance (strength and endurance) of barrels and actions of firearms
- Test and quality control data relating to fire control and safety mechanisms (including component parts) and strength and endurance of barrels and actions of firearms
- Alleged ammunition accidents and malfunctions involving safety-related incidents
- Test and quality control data relating to design or production of ammunition.

In particular, Remington has just received discovery requests in a personal injury lawsuit involving a Model 710 rifle. You should promptly send a copy of this directive to those employees at your facility who may have potentially responsive materials that such records must continue to be maintained as ordinarily kept and are not to be discarded, destroyed or deleted for any reason. With your assistance, we will be arranging for a coordinator at each site to assist in

arranging for a review of the records maintained by those employees who may have responsive materials.

This general notice is in addition to, and does not supercede, special procedures in place at one or more of your worksites to maintain manufacturing and engineering records that may also be relevant to litigation.

Should you have any questions, please feel free to call me.

As always, thank you for your anticipated cooperation.

Ronald H. Bristol, II

CC:

Tommy Millner	President and CEO
Mark Little	EVP, CFO And CAO

Ron Bristol

From: Bristol II, Ronald H
Sent: 11/17/2005 08:49:09 AM
To: Cahan, Paul L.; Rink, Charles P.; Evans, Danny; Campbell, Don H.; Dwyer, John; Lance, Kevin D.; Diaz, Danny; Schluckebier, David; Franz, Scott
CC: Millner, Tommy; Little, Mark; Dale Wills (dwills@smbtrials.com); aecohen@debevoise.com
BCC:
Subject: Litigation-related document retention

Please read the attached and forward according to the instructions included within
Any questions please call me
thanks

PR 2339

REM00032387

PRIVILEGED AND CONFIDENTIAL
ATTORNEY/CLIENT PRIVILEGE
ATTORNEY WORK PRODUCT

To:	Ammunition Manufacturing	(Lonoke)	Cahan/Rink
	Ammunition Sales and Marketing	(Madison)	Dwyer
	Armorer's School/Field Service	(Ilion & Madison)	Evans
	Consumer Service	(Lonoke & Madison)	Evans/Rink
	Arms Service and Product Service	(Ilion)	Evans
	Engineering	(Elizabethtown, Ilion & Lonoke, Mayfield)	Cahan
	Firearms Sales and Marketing	(Madison)	Campbell
	Firearms Manufacturing	(Ilion & Mayfield)	Cahan, Lance
	Research & Development	(Elizabethtown & Lonoke)	Cahan, Diaz, Schlukebier, Franz

From: Ronald H. Bristol, II
Executive Vice President and Chief Operating Officer

Date: November 15, 2005

Re: Litigation-Related Document Retention

Remington is from time to time involved in products liability lawsuits involving the company's firearms and ammunition products. This is a reminder that regular records retention periods for company records (including both hard and electronic copies and records) do not apply to any materials (i.e., these records are to be kept until further notice) containing information on any of the following topics relating to Remington firearms (both domestically and internationally sourced) and ammunition:

- Alleged accidental discharges, barrel or other bursts, and other potentially safety-related incidents relating to firearms
- The design, manufacture or performance of fire control and safety mechanisms (including component parts) of firearms
- The design, manufacture or performance (strength and endurance) of barrels and actions of firearms
- Test and quality control data relating to fire control and safety mechanisms (including component parts) and strength and endurance of barrels and actions of firearms
- Alleged ammunition accidents and malfunctions involving safety-related incidents
- Test and quality control data relating to design or production of ammunition.

In particular, Remington has just received discovery requests in a personal injury lawsuit involving a Model 710 rifle. You should promptly send a copy of this directive to those employees at your facility who may have potentially responsive materials that such records must continue to be maintained as ordinarily kept and are not to be discarded, destroyed or deleted for any reason. With your assistance, we will be arranging for a coordinator at each site to assist in

arranging for a review of the records maintained by those employees who may have responsive materials.

This general notice is in addition to, and does not supercede, special procedures in place at one or more of your worksites to maintain manufacturing and engineering records that may also be relevant to litigation.

Should you have any questions, please feel free to call me.

As always, thank you for your anticipated cooperation.

Ronald H. Bristol, II

CC:

Tommy Millner	President and CEO
Mark Little	EVP, CFO And CAO

PR 2341

REM00061340

Ron Bristol

From: Bristol II, Ronald H
Sent: 11/17/2005 03:07:24 PM
To: Tuschak, John S.
CC:
BCC:
Subject: FW: Litigation-related document retention

Ronald H. Bristol II

Chief Operating Officer

Remington Arms Copmany, Inc.

336.548.8875 (p)

336.548.7875 (f)

ron.bristol@remington.com

From: Bristol II, Ronald H
Sent: Thursday, November 17, 2005 8:49 AM
To: Cahan, Paul L.; Rink, Charles P.; Evans, Danny; Campbell, Don H.; Dwyer, John; Lance, Kevin D.; Diaz, Danny; Schluckebier, David; Franz, Scott
Cc: Millner, Tommy; Little, Mark; Dale Wills (dwills@smbtrials.com); aecohen@debevoise.com
Subject: Litigation-related document retention

Please read the attached and forward according to the instructions included within

Any questions please call me

thanks

PRIVILEGED AND CONFIDENTIAL
ATTORNEY/CLIENT PRIVILEGE
ATTORNEY WORK PRODUCT

To:	Ammunition Manufacturing	(Lonoke)	Cahan/Rink
	Ammunition Sales and Marketing	(Madison)	Dwyer
	Armorer's School/Field Service	(Ilion & Madison)	Evans
	Consumer Service	(Lonoke & Madison)	Evans/Rink
	Arms Service and Product Service	(Ilion)	Evans
	Engineering	(Elizabethtown, Ilion & Lonoke, Mayfield)	Cahan
	Firearms Sales and Marketing	(Madison)	Campbell
	Firearms Manufacturing	(Ilion & Mayfield)	Cahan, Lance
	Research & Development	(Elizabethtown & Lonoke)	Cahan, Diaz, Schlukebier, Franz

From: Ronald H. Bristol, II
Executive Vice President and Chief Operating Officer

Date: November 15, 2005

Re: Litigation-Related Document Retention

Remington is from time to time involved in products liability lawsuits involving the company's firearms and ammunition products. This is a reminder that regular records retention periods for company records (including both hard and electronic copies and records) do not apply to any materials (i.e., these records are to be kept until further notice) containing information on any of the following topics relating to Remington firearms (both domestically and internationally sourced) and ammunition:

- Alleged accidental discharges, barrel or other bursts, and other potentially safety-related incidents relating to firearms
- The design, manufacture or performance of fire control and safety mechanisms (including component parts) of firearms
- The design, manufacture or performance (strength and endurance) of barrels and actions of firearms
- Test and quality control data relating to fire control and safety mechanisms (including component parts) and strength and endurance of barrels and actions of firearms
- Alleged ammunition accidents and malfunctions involving safety-related incidents
- Test and quality control data relating to design or production of ammunition.

In particular, Remington has just received discovery requests in a personal injury lawsuit involving a Model 710 rifle. You should promptly send a copy of this directive to those employees at your facility who may have potentially responsive materials that such records must continue to be maintained as ordinarily kept and are not to be discarded, destroyed or deleted for any reason. With your assistance, we will be arranging for a coordinator at each site to assist in

arranging for a review of the records maintained by those employees who may have responsive materials.

This general notice is in addition to, and does not supercede, special procedures in place at one or more of your worksites to maintain manufacturing and engineering records that may also be relevant to litigation.

Should you have any questions, please feel free to call me.

As always, thank you for your anticipated cooperation.

Ronald H. Bristol, II

CC:

Tommy Millner	President and CEO
Mark Little	EVP, CFO And CAO

JOHN LOSCHIN

From: Evans, Danny
Sent: 11/17/2005 09:33:33 AM
To: Longo, Robert W.; Loschin, John; Nagle, Thomas J.; Supry, Fred L.; Nickerson, E. Ken; Spradling, Jason; Pearson, Todd A.; Watson, Laura M.; Claybrook, Dana
CC: Anderson, Julie; Kilts, Rick
BCC:
Subject: FW: Litigation-related document retention

See message below....please do not forward the attached to your dept personnel but provide directive as noted to maintain records of 710 related issues.

This would be consistent with the Boston retention, that we have been dealing with for years.

Let me know if you have questions

From: Bristol II, Ronald H
Sent: Thursday, November 17, 2005 8:49 AM
To: Cahan, Paul L.; Rink, Charles P.; Evans, Danny; Campbell, Don H.; Dwyer, John; Lance, Kevin D.; Diaz, Danny; Schluckebier, David; Franz, Scott
Cc: Millner, Tommy; Little, Mark; Dale Wills (dwills@smbtrials.com); aecohen@debevoise.com
Subject: Litigation-related document retention

Please read the attached and forward according to the instructions included within

Any questions please call me

thanks

PRIVILEGED AND CONFIDENTIAL
ATTORNEY/CLIENT PRIVILEGE
ATTORNEY WORK PRODUCT

To:

Ammunition Manufacturing	(Lonoke)	Cahan/Rink
Ammunition Sales and Marketing	(Madison)	Dwyer
Armorer's School/Field Service	(Ilion & Madison)	Evans
Consumer Service	(Lonoke & Madison)	Evans/Rink
Arms Service and Product Service	(Ilion)	Evans
Engineering	(Elizabethtown, Ilion & Lonoke, Mayfield)	Cahan
Firearms Sales and Marketing	(Madison)	Campbell
Firearms Manufacturing	(Ilion & Mayfield)	Cahan, Lance
Research & Development	(Elizabethtown & Lonoke)	Cahan, Diaz, Schlukebier, Franz

From: Ronald H. Bristol, II
Executive Vice President and Chief Operating Officer

Date: November 15, 2005

Re: Litigation-Related Document Retention

Remington is from time to time involved in products liability lawsuits involving the company's firearms and ammunition products. This is a reminder that regular records retention periods for company records (including both hard and electronic copies and records) do not apply to any materials (i.e., these records are to be kept until further notice) containing information on any of the following topics relating to Remington firearms (both domestically and internationally sourced) and ammunition:

- Alleged accidental discharges, barrel or other bursts, and other potentially safety-related incidents relating to firearms
- The design, manufacture or performance of fire control and safety mechanisms (including component parts) of firearms
- The design, manufacture or performance (strength and endurance) of barrels and actions of firearms
- Test and quality control data relating to fire control and safety mechanisms (including component parts) and strength and endurance of barrels and actions of firearms
- Alleged ammunition accidents and malfunctions involving safety-related incidents
- Test and quality control data relating to design or production of ammunition.

In particular, Remington has just received discovery requests in a personal injury lawsuit involving a Model 710 rifle. You should promptly send a copy of this directive to those employees at your facility who may have potentially responsive materials that such records must continue to be maintained as ordinarily kept and are not to be discarded, destroyed or deleted for any reason. With your assistance, we will be arranging for a coordinator at each site to assist in

arranging for a review of the records maintained by those employees who may have responsive materials.

This general notice is in addition to, and does not supercede, special procedures in place at one or more of your worksites to maintain manufacturing and engineering records that may also be relevant to litigation.

Should you have any questions, please feel free to call me.

As always, thank you for your anticipated cooperation.

Ronald H. Bristol, II

CC:

Tommy Millner	President and CEO
Mark Little	EVP, CFO And CAO

PR 2347

REM00039530

Scott Franz

From: Franz, Scott
Sent: 11/17/2005 10:41:55 AM
To: Walters, Dawn
CC: Norwood, Laura
BCC:
Subject: FW: Litigation-related document retention

Dawn,

I am also forwarding this to you since you control storage of DCR paperwork and the record retention room.

Scott Franz

Manager Research & Technology

Remington Arms Co. Inc.

Research & Development Technology Center

315 West Ring Road

Elizabethtown, KY 42701

phone 270-769-7607

fax 270-737-9576

E-mail: scott.franz@remington.com <mailto:scott.franz@remington.com>

From: Franz, Scott
Sent: Thursday, November 17, 2005 10:04 AM
To: Sergent, John M.; Watts, Jason A.; Diaz, Danny; Norton, Vince; Ronkainen, Jim; Keeney, Mike; Cook, Todd D.; Hammond, Mark T.; Davidson, Harold E.; Reesor, Phillip K.; Carson, Jody H.; Howell, Gary L.; Kratzwald, Jeff; Lee, Robert; Sims, Jonathan; Wade, Steve D.; Wade, Jeff L.; Jiranek, Marlin R.; Urbon, James E; James, Will; Snedeker, Jim
Cc: Franz, Scott
Subject: FW: Litigation-related document retention
Importance: High

Based on your response to my earlier e-mail and your potential to have M/ 710 related documents you are receiving this e-mail. Please review the attached document from Ron Bristol relative to document retention of the identified subject matter. If you have any questions please see me.

Thanks,

PR 2348

Scott Franz

Manager Research & Technology

Remington Arms Co. Inc.

Research & Development Technology Center

315 West Ring Road

Elizabethtown, KY 42701

phone 270-769-7607

fax 270-737-9576

E-mail: scott.franz@remington.com <mailto:scott.franz@remington.com>

From: Bristol II, Ronald H
Sent: Thursday, November 17, 2005 8:49 AM
To: Cahan, Paul L.; Rink, Charles P.; Evans, Danny; Campbell, Don H.; Dwyer, John; Lance, Kevin D.; Diaz, Danny; Schluckebier, David; Franz, Scott
Cc: Millner, Tommy; Little, Mark; Dale Wills (dwills@smbtrials.com); aecohen@debevoise.com
Subject: Litigation-related document retention

Please read the attached and forward according to the instructions included within

Any questions please call me

thanks

PR 2349

REM00032670

PRIVILEGED AND CONFIDENTIAL
ATTORNEY/CLIENT PRIVILEGE
ATTORNEY WORK PRODUCT

To:

Ammunition Manufacturing	(Lonoke)	Cahan/Rink
Ammunition Sales and Marketing	(Madison)	Dwyer
Armorer's School/Field Service	(Ilion & Madison)	Evans
Consumer Service	(Lonoke & Madison)	Evans/Rink
Arms Service and Product Service	(Ilion)	Evans
Engineering	(Elizabethtown, Ilion & Lonoke, Mayfield)	Cahan
Firearms Sales and Marketing	(Madison)	Campbell
Firearms Manufacturing	(Ilion & Mayfield)	Cahan, Lance
Research & Development	(Elizabethtown & Lonoke)	Cahan, Diaz, Schlukebier, Franz

From: Ronald H. Bristol, II
Executive Vice President and Chief Operating Officer

Date: November 15, 2005

Re: Litigation-Related Document Retention

Remington is from time to time involved in products liability lawsuits involving the company's firearms and ammunition products. This is a reminder that regular records retention periods for company records (including both hard and electronic copies and records) do not apply to any materials (i.e., these records are to be kept until further notice) containing information on any of the following topics relating to Remington firearms (both domestically and internationally sourced) and ammunition:

- Alleged accidental discharges, barrel or other bursts, and other potentially safety-related incidents relating to firearms
- The design, manufacture or performance of fire control and safety mechanisms (including component parts) of firearms
- The design, manufacture or performance (strength and endurance) of barrels and actions of firearms
- Test and quality control data relating to fire control and safety mechanisms (including component parts) and strength and endurance of barrels and actions of firearms
- Alleged ammunition accidents and malfunctions involving safety-related incidents
- Test and quality control data relating to design or production of ammunition.

In particular, Remington has just received discovery requests in a personal injury lawsuit involving a Model 710 rifle. You should promptly send a copy of this directive to those employees at your facility who may have potentially responsive materials that such records must continue to be maintained as ordinarily kept and are not to be discarded, destroyed or deleted for any reason. With your assistance, we will be arranging for a coordinator at each site to assist in

arranging for a review of the records maintained by those employees who may have responsive materials.

This general notice is in addition to, and does not supercede, special procedures in place at one or more of your worksites to maintain manufacturing and engineering records that may also be relevant to litigation.

Should you have any questions, please feel free to call me.

As always, thank you for your anticipated cooperation.

Ronald H. Bristol, II

CC:

Tommy Millner	President and CEO
Mark Little	EVP, CFO And CAO

Scott Franz

From: Franz, Scott
Sent: 11/17/2005 10:07:27 AM
To: Pendleton, Mike
CC:
BCC:
Subject: FW: Litigation-related document retention

Mike,

Forgot to copy you on this.

Scott

From: Franz, Scott
Sent: Thursday, November 17, 2005 10:04 AM
To: Sergent, John M.; Watts, Jason A.; Diaz, Danny; Norton, Vince; Ronkainen, Jim; Keeney, Mike; Cook, Todd D.; Hammond, Mark T.; Davidson, Harold E.; Reesor, Phillip K.; Carson, Jody H.; Howell, Gary L.; Kratzwald, Jeff; Lee, Robert; Sims, Jonathan; Wade, Steve D.; Wade, Jeff L.; Jiranek, Marlin R.; Urbon, James E; James, Will; Snedeker, Jim
Cc: Franz, Scott
Subject: FW: Litigation-related document retention
Importance: High

Based on your response to my earlier e-mail and your potential to have M/ 710 related documents you are receiving this e-mail. Please review the attached document from Ron Bristol relative to document retention of the identified subject matter. If you have any questions please see me.

Thanks,

Scott Franz

Manager Research & Technology

Remington Arms Co. Inc.

Research & Development Technology Center

315 West Ring Road

Elizabethtown, KY 42701

phone 270-769-7607

fax 270-737-9576

PR 2352

REM00032667

E-mail: scott.franz@remington.com <mailto:scott.franz@remington.com>

From: Bristol II, Ronald H
Sent: Thursday, November 17, 2005 8:49 AM
To: Cahan, Paul L.; Rink, Charles P.; Evans, Danny; Campbell, Don H.; Dwyer, John; Lance, Kevin D.; Diaz, Danny; Schluckebier, David; Franz, Scott
Cc: Millner, Tommy; Little, Mark; Dale Wills (dwills@smbtrials.com); aecohen@debevoise.com
Subject: Litigation-related document retention

Please read the attached and forward according to the instructions included within

Any questions please call me

thanks

PR 2353

REM00032668

PRIVILEGED AND CONFIDENTIAL
ATTORNEY/CLIENT PRIVILEGE
ATTORNEY WORK PRODUCT

To:

Ammunition Manufacturing	(Lonoke)	Cahan/Rink
Ammunition Sales and Marketing	(Madison)	Dwyer
Armorer's School/Field Service	(Ilion & Madison)	Evans
Consumer Service	(Lonoke & Madison)	Evans/Rink
Arms Service and Product Service	(Ilion)	Evans
Engineering	(Elizabethtown, Ilion & Lonoke, Mayfield)	Cahan
Firearms Sales and Marketing	(Madison)	Campbell
Firearms Manufacturing	(Ilion & Mayfield)	Cahan, Lance
Research & Development	(Elizabethtown & Lonoke)	Cahan, Diaz, Schlukebier, Franz

From: Ronald H. Bristol, II
Executive Vice President and Chief Operating Officer

Date: November 15, 2005

Re: Litigation-Related Document Retention

Remington is from time to time involved in products liability lawsuits involving the company's firearms and ammunition products. This is a reminder that regular records retention periods for company records (including both hard and electronic copies and records) do not apply to any materials (i.e., these records are to be kept until further notice) containing information on any of the following topics relating to Remington firearms (both domestically and internationally sourced) and ammunition:

- Alleged accidental discharges, barrel or other bursts, and other potentially safety-related incidents relating to firearms
- The design, manufacture or performance of fire control and safety mechanisms (including component parts) of firearms
- The design, manufacture or performance (strength and endurance) of barrels and actions of firearms
- Test and quality control data relating to fire control and safety mechanisms (including component parts) and strength and endurance of barrels and actions of firearms
- Alleged ammunition accidents and malfunctions involving safety-related incidents
- Test and quality control data relating to design or production of ammunition.

In particular, Remington has just received discovery requests in a personal injury lawsuit involving a Model 710 rifle. You should promptly send a copy of this directive to those employees at your facility who may have potentially responsive materials that such records must continue to be maintained as ordinarily kept and are not to be discarded, destroyed or deleted for any reason. With your assistance, we will be arranging for a coordinator at each site to assist in

arranging for a review of the records maintained by those employees who may have responsive materials.

This general notice is in addition to, and does not supercede, special procedures in place at one or more of your worksites to maintain manufacturing and engineering records that may also be relevant to litigation.

Should you have any questions, please feel free to call me.

As always, thank you for your anticipated cooperation.

Ronald H. Bristol, II

CC:

Tommy Millner	President and CEO
Mark Little	EVP, CFO And CAO

PR 2355

REM00066079

Jim Ronkainen

From: Franz, Scott
Sent: 11/17/2005 10:04:27 AM
To: Sergent, John M.; Watts, Jason A.; Diaz, Danny; Norton, Vince; Ronkainen, Jim; Keeney, Mike; Cook, Todd D.; Hammond, Mark T.; Davidson, Harold E.; Reesor, Phillip K.; Carson, Jody H.; Howell, Gary L.; Kratzwald, Jeff; Lee, Robert; Sims, Jonathan; Wade, Steve D.; Wade, Jeff L.; Jiranek, Marlin R.; Urbon, James E; James, Will; Snedeker, Jim
CC: Franz, Scott
BCC:
Subject: FW: Litigation-related document retention

Based on your response to my earlier e-mail and your potential to have M/ 710 related documents you are receiving this e-mail. Please review the attached document from Ron Bristol relative to document retention of the identified subject matter. If you have any questions please see me.

Thanks,

Scott Franz

Manager Research & Technology

Remington Arms Co. Inc.

Research & Development Technology Center

315 West Ring Road

Elizabethtown, KY 42701

phone 270-769-7607

fax 270-737-9576

E-mail: scott.franz@remington.com <mailto:scott.franz@remington.com>

From: Bristol II, Ronald H
Sent: Thursday, November 17, 2005 8:49 AM
To: Cahan, Paul L.; Rink, Charles P.; Evans, Danny; Campbell, Don H.; Dwyer, John; Lance, Kevin D.; Diaz, Danny; Schluckebier, David; Franz, Scott
Cc: Millner, Tommy; Little, Mark; Dale Wills (dwills@smbtrials.com); aecohen@debevoise.com
Subject: Litigation-related document retention

Please read the attached and forward according to the instructions included within

Any questions please call me

thanks

PR 2356

REM00032607

PRIVILEGED AND CONFIDENTIAL
ATTORNEY/CLIENT PRIVILEGE
ATTORNEY WORK PRODUCT

To:	Ammunition Manufacturing	(Lonoke)	Cahan/Rink
	Ammunition Sales and Marketing	(Madison)	Dwyer
	Armorer's School/Field Service	(Ilion & Madison)	Evans
	Consumer Service	(Lonoke & Madison)	Evans/Rink
	Arms Service and Product Service	(Ilion)	Evans
	Engineering	(Elizabethtown, Ilion & Lonoke, Mayfield)	Cahan
	Firearms Sales and Marketing	(Madison)	Campbell
	Firearms Manufacturing	(Ilion & Mayfield)	Cahan, Lance
	Research & Development	(Elizabethtown & Lonoke)	Cahan, Diaz, Schlukebier, Franz

From: Ronald H. Bristol, II
Executive Vice President and Chief Operating Officer

Date: November 15, 2005

Re: Litigation-Related Document Retention

Remington is from time to time involved in products liability lawsuits involving the company's firearms and ammunition products. This is a reminder that regular records retention periods for company records (including both hard and electronic copies and records) do not apply to any materials (i.e., these records are to be kept until further notice) containing information on any of the following topics relating to Remington firearms (both domestically and internationally sourced) and ammunition:

- Alleged accidental discharges, barrel or other bursts, and other potentially safety-related incidents relating to firearms
- The design, manufacture or performance of fire control and safety mechanisms (including component parts) of firearms
- The design, manufacture or performance (strength and endurance) of barrels and actions of firearms
- Test and quality control data relating to fire control and safety mechanisms (including component parts) and strength and endurance of barrels and actions of firearms
- Alleged ammunition accidents and malfunctions involving safety-related incidents
- Test and quality control data relating to design or production of ammunition.

In particular, Remington has just received discovery requests in a personal injury lawsuit involving a Model 710 rifle. You should promptly send a copy of this directive to those employees at your facility who may have potentially responsive materials that such records must continue to be maintained as ordinarily kept and are not to be discarded, destroyed or deleted for any reason. With your assistance, we will be arranging for a coordinator at each site to assist in

arranging for a review of the records maintained by those employees who may have responsive materials.

This general notice is in addition to, and does not supercede, special procedures in place at one or more of your worksites to maintain manufacturing and engineering records that may also be relevant to litigation.

Should you have any questions, please feel free to call me.

As always, thank you for your anticipated cooperation.

Ronald H. Bristol, II

CC:

Tommy Millner	President and CEO
Mark Little	EVP, CFO And CAO

Scott Franz

From: Franz, Scott
Sent: 11/17/2005 10:04:27 AM
To: Sergent, John M.; Watts, Jason A.; Diaz, Danny; Norton, Vince; Ronkainen, Jim; Keeney, Mike; Cook, Todd D.; Hammond, Mark T.; Davidson, Harold E.; Reesor, Phillip K.; Carson, Jody H.; Howell, Gary L.; Kratzwald, Jeff; Lee, Robert; Sims, Jonathan; Wade, Steve D.; Wade, Jeff L.; Jiranek, Marlin R.; Urbon, James E; James, Will; Snedeker, Jim
CC: Franz, Scott
BCC:
Subject: FW: Litigation-related document retention

Based on your response to my earlier e-mail and your potential to have M/ 710 related documents you are receiving this e-mail. Please review the attached document from Ron Bristol relative to document retention of the identified subject matter. If you have any questions please see me.

Thanks,

Scott Franz

Manager Research & Technology

Remington Arms Co. Inc.

Research & Development Technology Center

315 West Ring Road

Elizabethtown, KY 42701

phone 270-769-7607

fax 270-737-9576

E-mail: scott.franz@remington.com <mailto:scott.franz@remington.com>

From: Bristol II, Ronald H
Sent: Thursday, November 17, 2005 8:49 AM
To: Cahan, Paul L.; Rink, Charles P.; Evans, Danny; Campbell, Don H.; Dwyer, John; Lance, Kevin D.; Diaz, Danny; Schluckebier, David; Franz, Scott
Cc: Millner, Tommy; Little, Mark; Dale Wills (dwills@smbtrials.com); aecohen@debevoise.com
Subject: Litigation-related document retention

Please read the attached and forward according to the instructions included within

PR 2359

REM00032665

Any questions please call me

thanks

PR 2360

REM00032666

PRIVILEGED AND CONFIDENTIAL
ATTORNEY/CLIENT PRIVILEGE
ATTORNEY WORK PRODUCT

To:	Ammunition Manufacturing	(Lonoke)	Cahan/Rink
	Ammunition Sales and Marketing	(Madison)	Dwyer
	Armorer's School/Field Service	(Ilion & Madison)	Evans
	Consumer Service	(Lonoke & Madison)	Evans/Rink
	Arms Service and Product Service	(Ilion)	Evans
	Engineering	(Elizabethtown, Ilion & Lonoke, Mayfield)	Cahan
	Firearms Sales and Marketing	(Madison)	Campbell
	Firearms Manufacturing	(Ilion & Mayfield)	Cahan, Lance
	Research & Development	(Elizabethtown & Lonoke)	Cahan, Diaz, Schlukebier, Franz

From: Ronald H. Bristol, II
Executive Vice President and Chief Operating Officer

Date: November 15, 2005

Re: Litigation-Related Document Retention

Remington is from time to time involved in products liability lawsuits involving the company's firearms and ammunition products. This is a reminder that regular records retention periods for company records (including both hard and electronic copies and records) do not apply to any materials (i.e., these records are to be kept until further notice) containing information on any of the following topics relating to Remington firearms (both domestically and internationally sourced) and ammunition:

- Alleged accidental discharges, barrel or other bursts, and other potentially safety-related incidents relating to firearms
- The design, manufacture or performance of fire control and safety mechanisms (including component parts) of firearms
- The design, manufacture or performance (strength and endurance) of barrels and actions of firearms
- Test and quality control data relating to fire control and safety mechanisms (including component parts) and strength and endurance of barrels and actions of firearms
- Alleged ammunition accidents and malfunctions involving safety-related incidents
- Test and quality control data relating to design or production of ammunition.

In particular, Remington has just received discovery requests in a personal injury lawsuit involving a Model 710 rifle. You should promptly send a copy of this directive to those employees at your facility who may have potentially responsive materials that such records must continue to be maintained as ordinarily kept and are not to be discarded, destroyed or deleted for any reason. With your assistance, we will be arranging for a coordinator at each site to assist in

arranging for a review of the records maintained by those employees who may have responsive materials.

This general notice is in addition to, and does not supercede, special procedures in place at one or more of your worksites to maintain manufacturing and engineering records that may also be relevant to litigation.

Should you have any questions, please feel free to call me.

As always, thank you for your anticipated cooperation.

Ronald H. Bristol, II

CC:

Tommy Millner	President and CEO
Mark Little	EVP, CFO And CAO

PR 2362

REM00066077

Steve Perniciaro

From: Perniciaro, Stephen
Sent: 11/30/2005 08:27:53 AM
To: Mead, Joseph P.
CC:
BCC:
Subject: FW: Litigation-related document retention

CONFIDENTIAL

Joe,

Please set up a meeting today with me and your salary design staff to discuss the attached document retention notice.

Steve P.

CONFIDENTIAL

From: Supry, Fred L.
Sent: Thursday, November 17, 2005 3:25 PM
To: Perniciaro, Stephen
Subject: FW: Litigation-related document retention

Fred Supry, Manager

Product Service and Law Enforcement Training

Remington Arms Company

14 Hoefler Avenue

Ilion, NY 13357

Phone: 315-895-3606

PR 2363

REM00078409

Fax: 315-895-3661

e-mail: fred.supry@remington.com

From: Evans, Danny
Sent: Thursday, November 17, 2005 9:34 AM
To: Longo, Robert W.; Loschin, John; Nagle, Thomas J.; Supry, Fred L.; Nickerson, E. Ken; Spradling, Jason; Pearson, Todd A.; Watson, Laura M.; Claybrook, Dana
Cc: Anderson, Julie; Kilts, Rick
Subject: FW: Litigation-related document retention

See message below....please do not forward the attached to your dept personnel but provide directive as noted to maintain records of 710 related issues.

This would be consistent with the Boston retention, that we have been dealing with for years.

Let me know if you have questions

From: Bristol II, Ronald H
Sent: Thursday, November 17, 2005 8:49 AM
To: Cahan, Paul L.; Rink, Charles P.; Evans, Danny; Campbell, Don H.; Dwyer, John; Lance, Kevin D.; Diaz, Danny; Schluckebier, David; Franz, Scott
Cc: Millner, Tommy; Little, Mark; Dale Wills (dwills@smbtrials.com); aecohen@debevoise.com
Subject: Litigation-related document retention

Please read the attached and forward according to the instructions included within

Any questions please call me

thanks

PR 2364

REM00078410

Kevin Lance

From: Lance, Kevin D.
Sent: 11/17/2005 02:52:18 PM
To: Gooch, Jim C.; Vicars, Gerald
CC:
BCC:
Subject: FW: Litigation-related document retention

Gentlemen,

I believe that your departments are the only ones that may have a need to review this memo on document retention.

Gerald, please forward to those employees in your department that may have relevant documentation on the 710.

Thanks,

Kevin

From: Bristol II, Ronald H
Sent: Thursday, November 17, 2005 7:49 AM
To: Cahan, Paul L.; Rink, Charles P.; Evans, Danny; Campbell, Don H.; Dwyer, John; Lance, Kevin D.; Diaz, Danny; Schluckebier, David; Franz, Scott
Cc: Millner, Tommy; Little, Mark; Dale Wills (dwills@smbtrials.com); aecohen@debevoise.com
Subject: Litigation-related document retention

Please read the attached and forward according to the instructions included within

Any questions please call me

thanks

PR 2365

REM00076354