| NUMBER | REMINGTON ARMS CO. INC. RESEARCH & DEV. DEPT | |
|---|---|---|
| A17044 | SCALE 4X SIZE | SUPERSEDES-REFERENCE A17044 |

TITLE: CLIP

| DES. BY DATE | DRN. BY DATE | CHK. BY DATE | APP. BY DATE |
|---|---|---|---|
| AW. 1-31-44 | DD 18APR66 | DD 19APR66 | |

FOR DETAILS, SEE PROCESS RECORD

| MODEL | PART USE | | QUAN. | SEE |
|---|---|---|---|---|
| 721 | 17044 | SAFETY SNAP WASHER | 1 | D17036 |
| 722 | | | 1 | [illegible] |
| 40-X | | | 1 | [illegible] |
| 40XCF | | | 1 | P.L. |
| 725 | | SAFETY SNAP WASHER | 1 | D24575 |
| 725 | | BOLT STOP PIN SNAP WASHER | 1 | |
| I.F.R. | | SEAR LEVER PIN CLIP | 1 | SKD 266 |
| 700 ADL BDL | | SAFETY SNAP WASHER | 1 | D26345 |
| XP 100 | | | 1 | P.L. |
| 600 | | | 1 | P.L. |
| 40X-B | | | 1 | P.L. |
| 40XB IFR 40XCF | | | 1 | D27565 |
| 700 VAR | 17044 | SAFETY SNAP WASHER | 1 | P.L. |
| 660 | " | " | 1 | " |
| MOHAWK 600 | 17044 | SAFETY SNAP WASHER | 1 | |
| 7LWT | " | " " " | 1 | P.L. |

| ALT. | WAS | REFERENCE | BY | DATE |
|---|---|---|---|---|
| 20 | ADD USE 7LWT | 11667 | EB | 12/5/82 |
| 19 | REMOVED | 11204 | FH | 5-1-80 |
| 18 | CHANGED H.T. WAS 72-75 RB | 10062 | [illegible] | 9-11-75 |
| 17 | ADD MOHAWK USE 600 | 8444 | RC | 9-11-70 |
| 16 | ADD USE 660 | 6664 | F | 10/10-66 |
| 15 | REDRAWN | 6505 | DD | 19APR66 |

ALTERATIONS

TFA-3 REV. 1

DO NOT SCALE THIS DRAWING: WORK TO FIGURES

UNLESS OTHERWISE NOTED, TOLERANCES ON DECIMAL DIMENSIONS ARE ±.005 & ON FRACTIONAL DIMENSIONS ± 1/64 & ON ANGULAR DIMENSIONS ±00°-30'

FINISHES ARE DESIGNATED BY ROOT MEAN SQUARE (R.M.S.) MICRO-INCH ROUGHNESS VALUES AND ARE THE MAXIMUM ROUGHNESS ACCEPTABLE. UNLESS OTHERWISE SPECIFIED, FINISH ROUGHNESS TO BE 125 OR BETTER.

RECOMMENDED MATERIAL AND HEAT TREAT

MATERIAL C1035 C.R. SPRING STEEL

HEAT TREAT H.T.

(18) HARDNESS R.C.N. [illegible]

COLOR TEMPER COLOR

(19) ~~NEW STEEL W/D — OR TO BE DONE W/ OWN~~

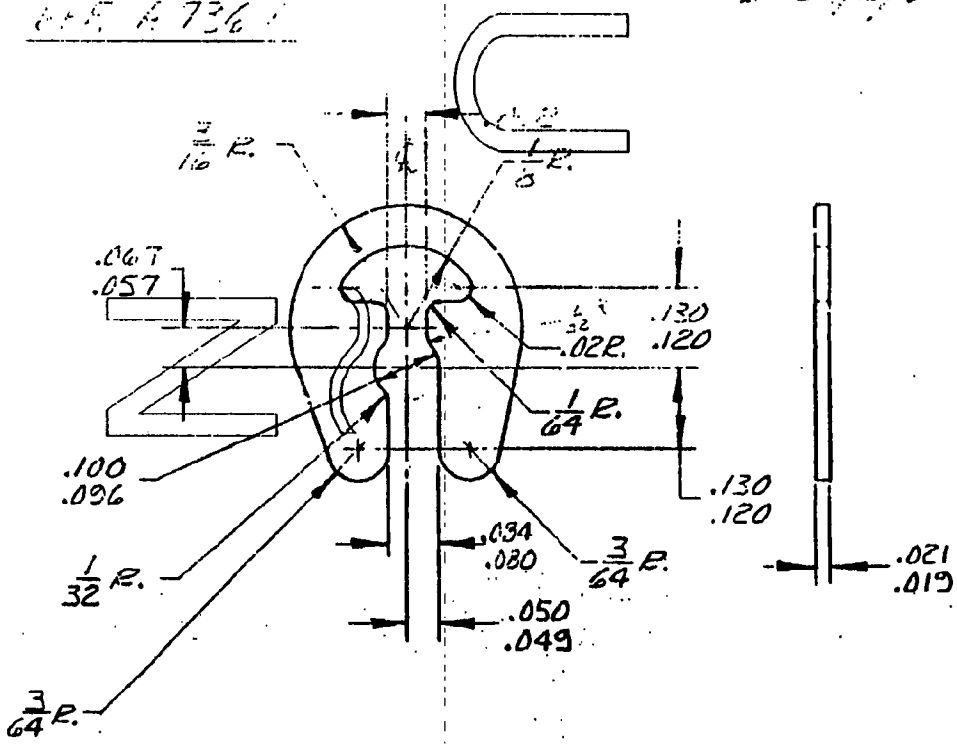


THIS DRAWING OR INFORMATION IS PROPRIETARY INFORMATION TO THE REMINGTON ARMS COMPANY, INC.

A17044

20 (11.17)

R2522569

CONFIDENTIAL-SUBJECT TO PROTECTIVE ORDER
KINZER V. REMINGTON