CONFIDENTIAL-SUBJECT TO PROTECTIVE ORDER
KINZER V. REMINGTON

THIS DRAWING OR INFORMATION IS PROPRIETARY INFORMATION TO THE REMINGTON ARMS COMPANY, INC.

DO NOT SCALE THIS DRAWING; WORK TO FIGURES UNLESS OTHERWISE NOTED.
TOLERANCES ON DECIMAL DIMENSIONS ARE:
1 PLACE .X ± .010
2 PLACE .XX ± .005
3 PLACE .XXX ± .002
& ON FRACTIONAL DIMENSIONS ± 1/64
& ON ANGULAR DIMENSIONS ± 30' - 30'
FINISHES ARE ESTIMATED BY FOOT MEAN ROUGH (R.M.R.) MICRO-INCH DIMENSIONS VALUES ARE ARE THE MAXIMUM ROUGHNESS ACCEPTABLE, UNLESS OTHERWISE SPECIFIED.
FINISH ROUGHNESS TO BE 125 OR BETTER.

RECOMMENDED MATERIAL AND HEAT TREAT
MATERIAL _____
HEAT TREAT _____
HARDNESS _____
COLOR _____
HEAT TREAT AND COLOR TO BE DONE BY REMINGTON

ALTERATIONS

ALT.	NOTE	ENGR.	INT	DATE

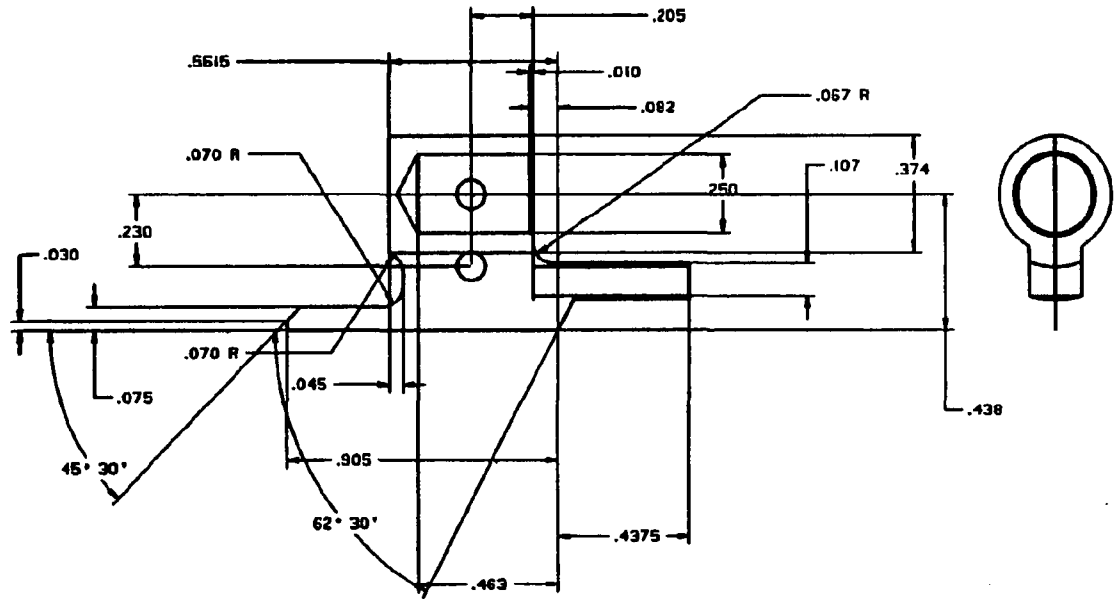

NIBLAR		
MODEL	PART NO.	PART USE
CHK. BY DATE	CHK. BY DATE 05F	CHK. BY DATE	APR. BY DATE
TITLE PIN HEAD MAX		
NUMBER C-93689	SCALE 4X	REMINGTON ARMS CO. INC.

CV FILENAME - NEW NEAR FIRING-PINHEAD-MAX.RAW