C6349017

MODEL 700™ M24

Model SWS ™

Action

Barrel Length

Capacity

Order No. 5716

*Includes 1 in chamber.

Remington

BARBER - M24 0105722

BARBER - M24 0105761

CONFIDENTIAL-SUBJECT TO PROTECTIVE ORDER
KINZER V. REMINGTON

Arms Services Repair & Estimate System

File Add Repair Estimate Repair Expedite Repair Inquiry Repair Tools CSR Tools Reports Table Maintenance System Maintenance Help

Repair Inquiry

Repair Number: RE00129143

Verify Repair

Serial: C6349017 Model M24 SWS Center Fire
Caliber: 7.62 NATO Produced: 06/19/1990

Repairman:

Status: New 5/9/2007 11:25:09 AM

Address Information

Customer: (Received From)	Return To: (Received From)
Name: TRANSPORTATION OFFICER	TRANSPORTATION OFFICER
Address 1: BLDG 49015 CRSP UPSTAIRS	BLDG 49015 CRSP UPSTAIRS
Address 2: SANTA FE AVE PO Box:	SANTA FE AVE PO Box:
City: FORT HOOD	FORT HOOD
State: TX Zip Code: 76544 Country: US	State: TX Zip Code: 76544 Country: US

FFL:

Contact / Condition | Problems | Estimate | History / Status | Shipping / Billing

Contact Information

Phone: NN

Fax:

Email:

Comments:

Received Condition

Fair

Condition Notes:

CSR Notes:

Accessories Received

Code	Desc	Qty
A007	With Stud	3
A010	Hard Case	1
A017	Scope Base	1
A026	Scope	1
A045	Bi Pod	1
A057	Frt and Rear Sgt Base	1
D000	SCOPE CASE	1

Repair Search | Refresh | Close

nagletj 5/10/2007 11:26 AM CAPS NUM INS SCRL

start 2 Mi... 5 In... 2 Mi... SAP L... Part ... Arms ... 11:26 AM

Serial Number: C6349017

Model: M24 SWS

RE00129143

SNIPER WEAPON SYSTEM - UNIQUE STATISTICAL INFOMATION

FIREARM SERIAL NUMBER / DATASET NAME: C6349017.__0
FILE DATE AND TIME: 06/06/2007 13:27

THE FOLLOWING DATA IS ALL REPORTED IN UNITS OF INCHES

The Average X Centroid of the Five Target Set:	0.011
The Average Y Centroid of the Five Target Set:	0.067
The Average Point of Impact of the Five Target Set:	0.068
The Average Mean Radius of the Five Target Set:	0.818
The Distance from POA to Centroid Target #1:	0.197
The Distance from Centroid Target #2 to Centroid Target #1:	0.236
The Distance from Centroid Target #3 to Centroid Target #1:	0.300
The Distance from Centroid Target #4 to Centroid Target #1:	0.357
The Distance from Centroid Target #5 to Centroid Target #1:	0.134

CONFIDENTIAL-SUBJECT TO PROTECTIVE ORDER
KINZER V. REMINGTON

BARBER - M24 0105725

SERIAL NUMBER: C6349017.__0
TARGET NUMBER: 1
FILE DATE: 06/06/2007
FILE TIME: 13:27

X CENTROID:	0.100
Y CENTROID:	0.170
POA TO CENTROID:	0.197
HORZ SPREAD:	2.337
VERT SPREAD:	2.447
GROUP SPREAD:	2.598
MIN RADIUS:	0.200
MAX RADIUS:	1.755
MEAN RADIUS:	0.782
# IN 1 IN DIAMETER:	3
# IN 2 IN DIAMETER:	7
# in 3 IN DIAMETER:	9

POINT#	X	Y
1:	-1.123	0.240
2:	-0.705	0.027
3:	-0.405	0.199
4:	-0.139	-0.640
5:	1.214	-0.138
6:	0.724	0.259
7:	0.461	-0.130
8:	0.277	0.076
9:	-0.036	-0.004
10:	0.733	1.807

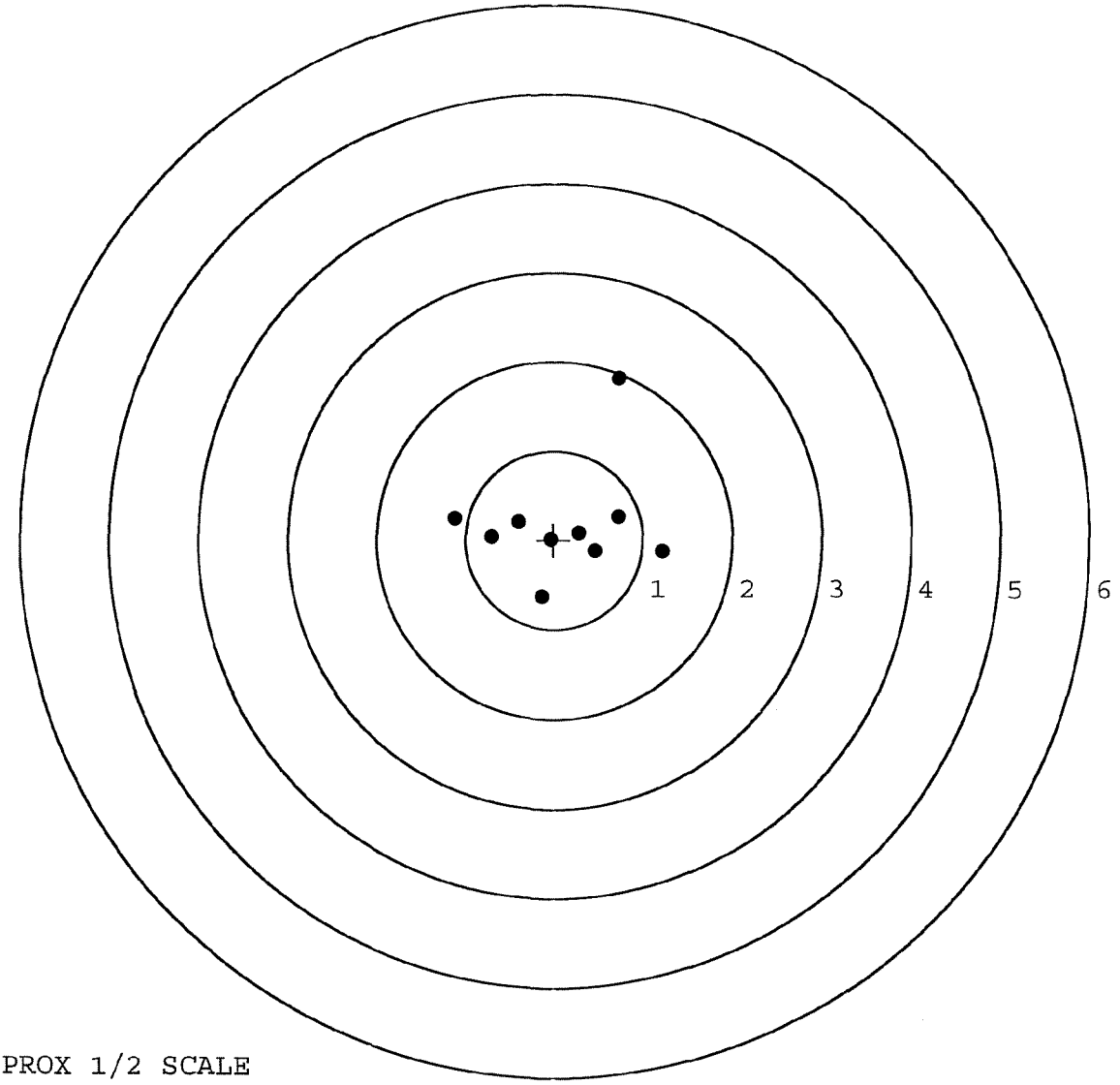

TARGET APPROX 1/2 SCALE

BARBER - M24 0105726

SERIAL NUMBER: C6349017.__0
TARGET NUMBER: 2
FILE DATE: 06/06/2007
FILE TIME: 13:27

X CENTROID:	0.278
Y CENTROID:	0.013
POA TO CENTROID:	0.278
HORZ SPREAD:	2.506
VERT SPREAD:	1.954
GROUP SPREAD:	2.600
MIN RADIUS:	0.141
MAX RADIUS:	1.320
MEAN RADIUS:	0.864
# IN 1 IN DIAMETER:	2
# IN 2 IN DIAMETER:	5
# in 3 IN DIAMETER:	10

POINT#	X	Y
1:	1.051	0.760
2:	1.186	0.523
3:	1.500	-0.372
4:	0.715	-1.194
5:	0.031	0.579
6:	0.223	-0.117
7:	-0.221	-0.356
8:	-0.130	-0.045
9:	-0.574	0.036
10:	-1.006	0.320

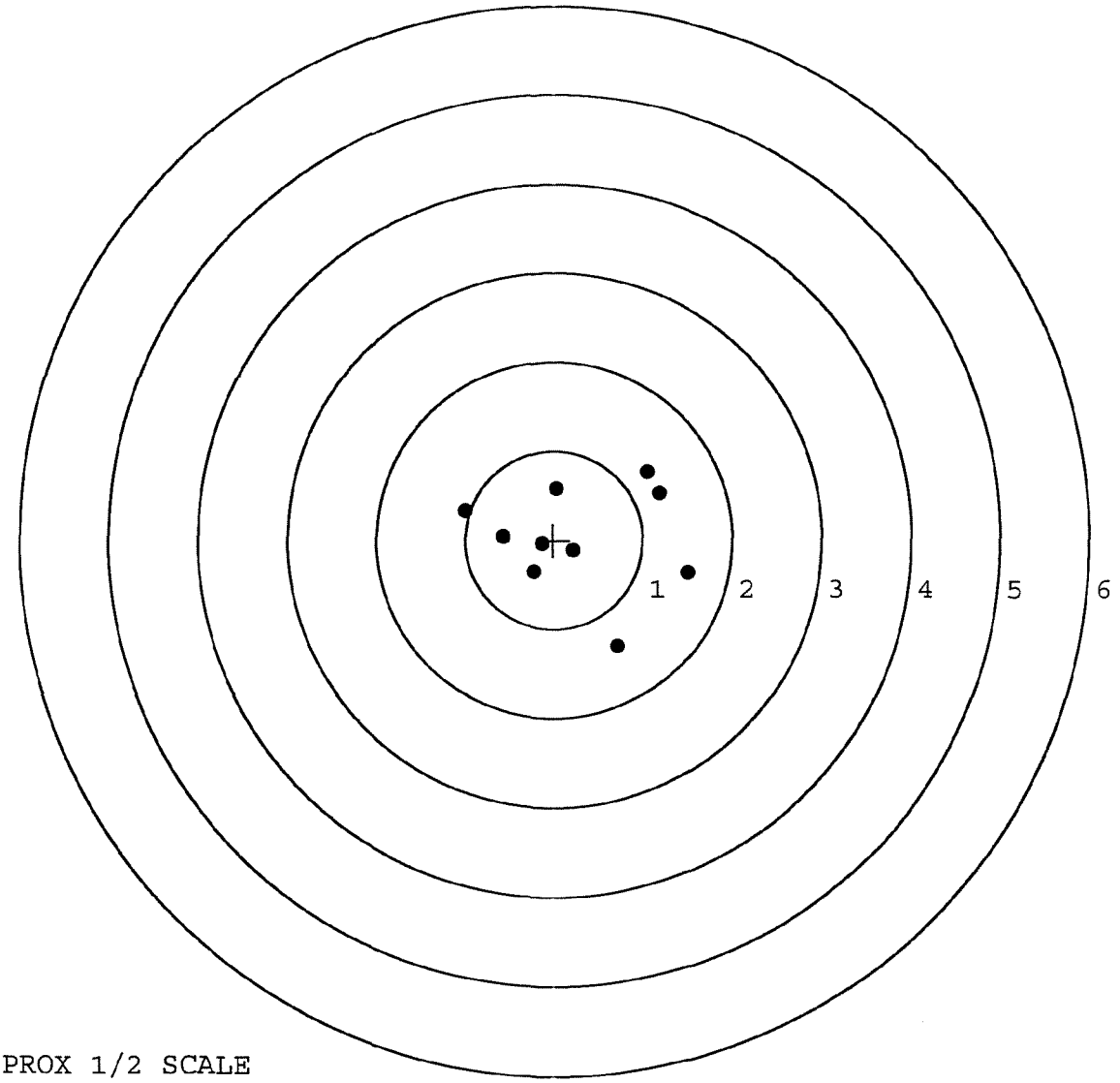

TARGET APPROX 1/2 SCALE

BARBER - M24 0105727

SERIAL NUMBER: C6349017.__0
TARGET NUMBER: 3
FILE DATE: 06/06/2007
FILE TIME: 13:27

X CENTROID:	-0.200
Y CENTROID:	0.175
POA TO CENTROID:	0.266
HORZ SPREAD:	1.273
VERT SPREAD:	1.997
GROUP SPREAD:	1.943
MIN RADIUS:	0.278
MAX RADIUS:	1.086
MEAN RADIUS:	0.706
# IN 1 IN DIAMETER:	3
# IN 2 IN DIAMETER:	7
# in 3 IN DIAMETER:	10

POINT#	X	Y
1:	-0.406	1.236
2:	0.371	1.099
3:	-0.631	0.625
4:	-0.902	0.583
5:	0.073	0.248
6:	0.021	0.006
7:	-0.361	-0.062
8:	-0.182	-0.475
9:	-0.237	-0.746
10:	0.253	-0.761

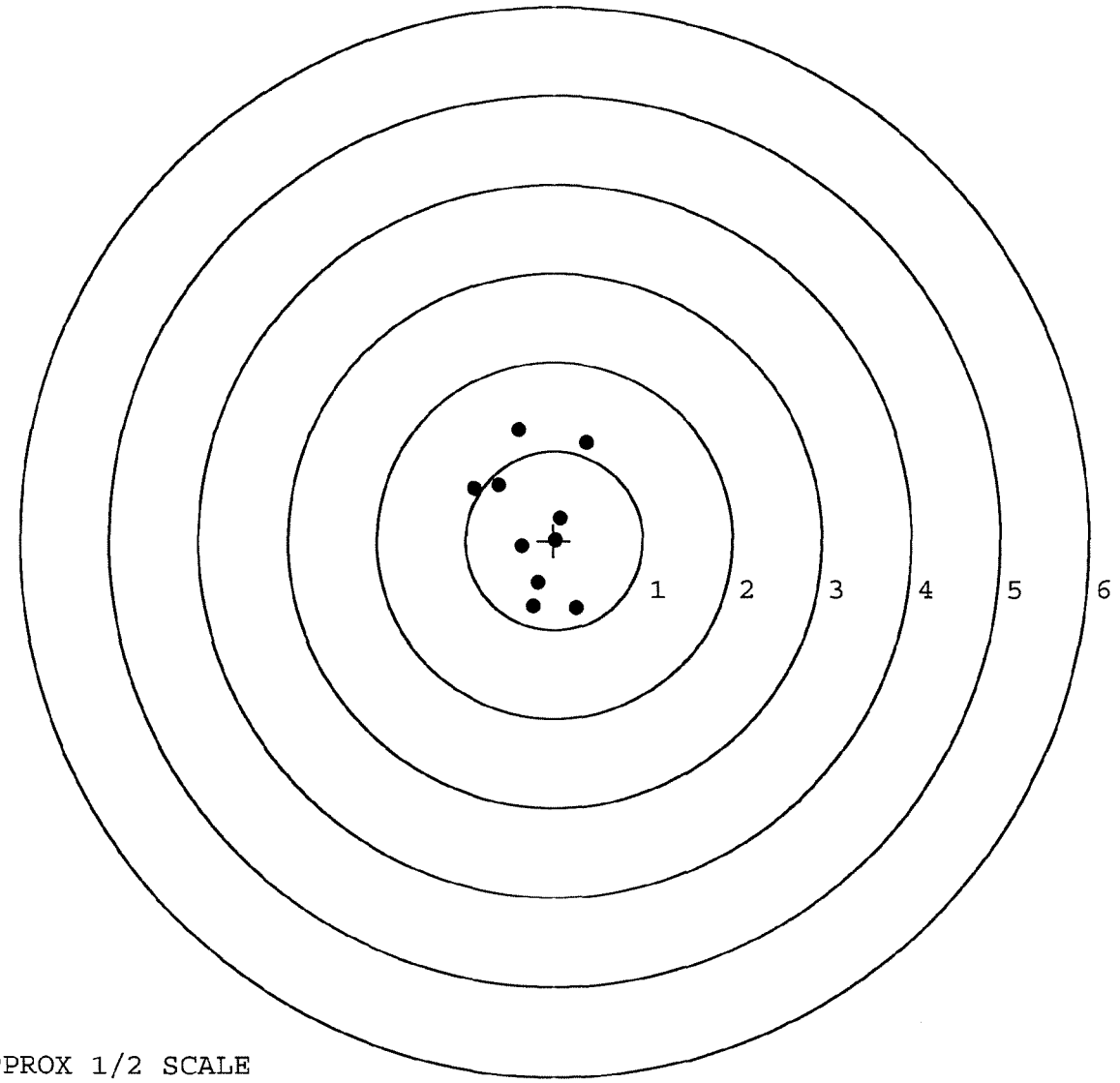

TARGET APPROX 1/2 SCALE

BARBER - M24 0105728

SERIAL NUMBER: C6349017.__0
TARGET NUMBER: 4
FILE DATE: 06/06/2007
FILE TIME: 13:27

X CENTROID:	-0.162
Y CENTROID:	-0.074
POA TO CENTROID:	0.178
HORZ SPREAD:	1.138
VERT SPREAD:	2.723
GROUP SPREAD:	2.776
MIN RADIUS:	0.151
MAX RADIUS:	1.404
MEAN RADIUS:	1.006
# IN 1 IN DIAMETER:	2
# IN 2 IN DIAMETER:	3
# in 3 IN DIAMETER:	10

POINT#	X	Y
1:	0.180	-1.436
2:	-0.220	-1.262
3:	-0.815	-1.013
4:	0.295	-1.034
5:	0.191	-0.100
6:	-0.031	0.001
7:	0.323	0.603
8:	-0.376	1.057
9:	-0.353	1.287
10:	-0.810	1.158

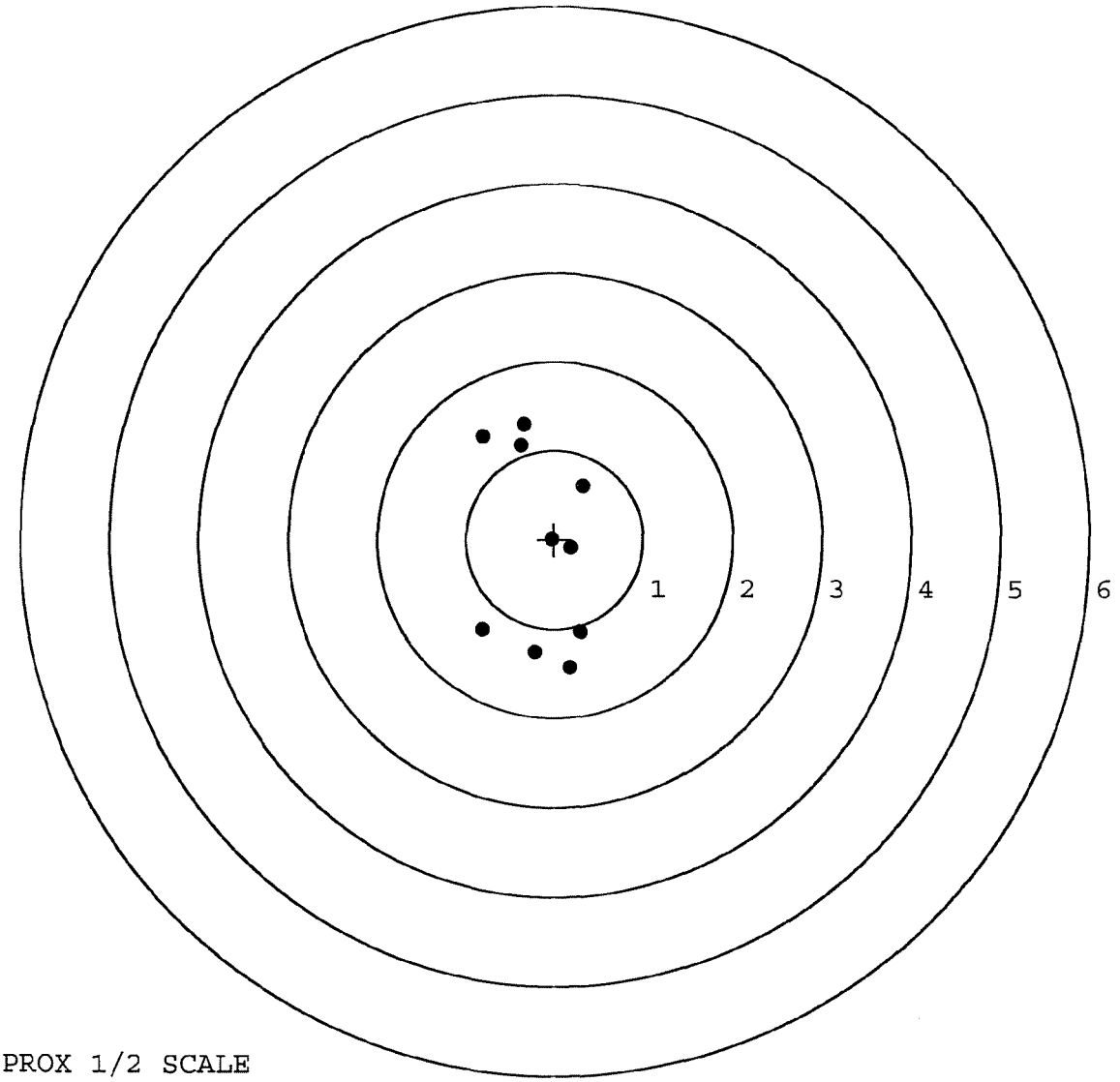

TARGET APPROX 1/2 SCALE

SERIAL NUMBER: C6349017.__0
TARGET NUMBER: 5
FILE DATE: 06/06/2007
FILE TIME: 13:27

X CENTROID:	0.037
Y CENTROID:	0.051
POA TO CENTROID:	0.063
HORZ SPREAD:	1.453
VERT SPREAD:	1.851
GROUP SPREAD:	2.236
MIN RADIUS:	0.385
MAX RADIUS:	1.274
MEAN RADIUS:	0.732
# IN 1 IN DIAMETER:	1
# IN 2 IN DIAMETER:	9
# in 3 IN DIAMETER:	10

POINT#	X	Y
1:	0.352	-0.697
2:	0.391	-0.506
3:	-0.446	-0.785
4:	-0.645	-0.356
5:	-0.454	-0.222
6:	-0.429	0.273
7:	0.192	0.404
8:	0.333	0.596
9:	0.272	0.738
10:	0.808	1.066

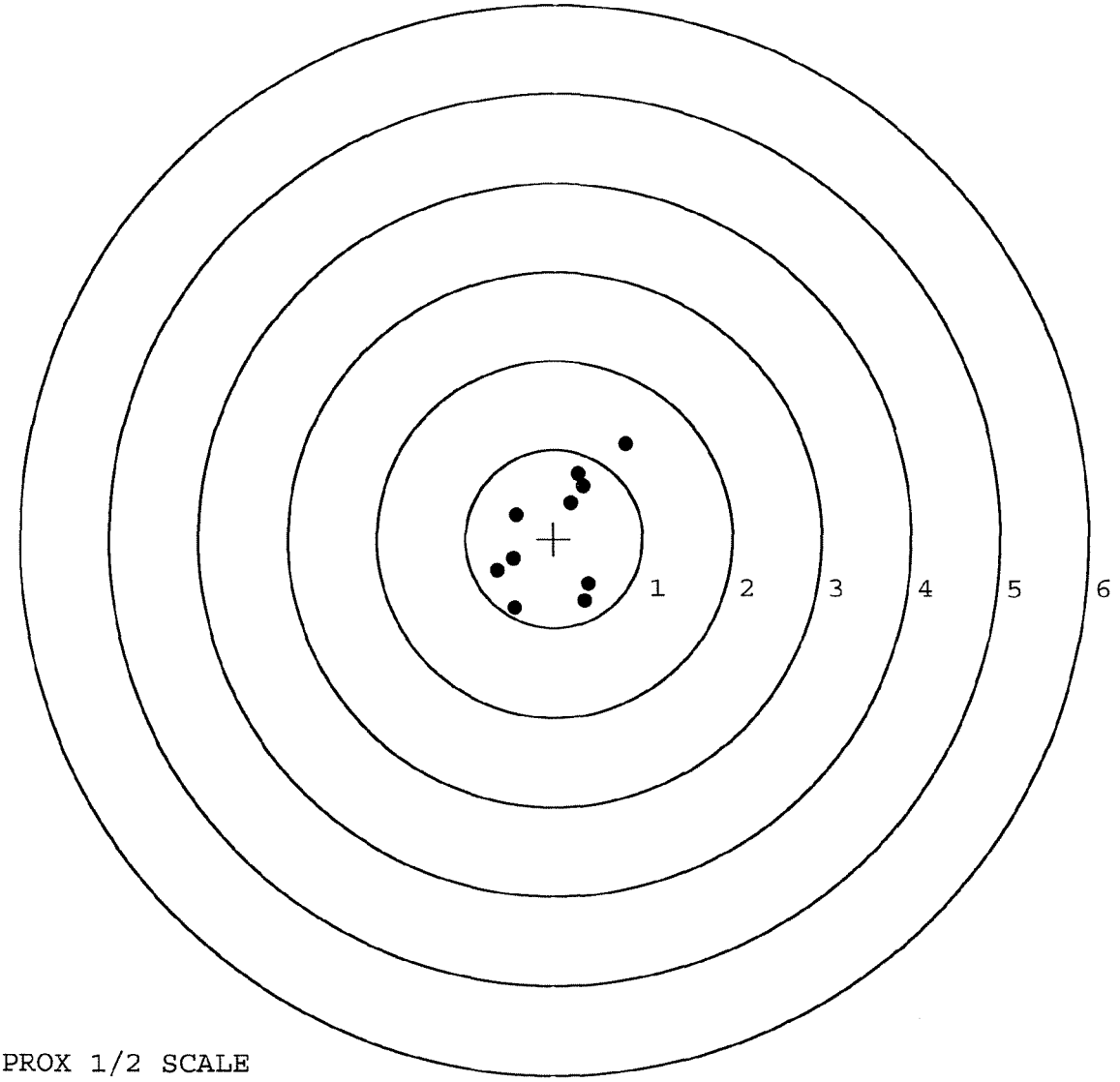

TARGET APPROX 1/2 SCALE

M-24 INSPECTION CHECKLIST
CONTRACT #: DAAE-20-02-C-0149

R & E NUMBER 129143

SERIAL NUMBER C6349017

LOG-IN DATE 5-9-07

OPERATION #	OPERATION NAME		DATE	INITIAL
500	DIS-ASSEMBLE GUN		5-21-07	RTL
505	RE-BARREL		5-22-07	RTL
560	ASSEMBLE		5-23-07	RTL
600	PROOF	MAGNA-FLUX	5-25-07	TRW
605	CHECK HEADSPACE	MAY	5-25-07	TRW
610	DIS-ASSEMBLE GUN		5-29-07	RTL
612	MAGNAFLUX	OPERATOR	5/29/07	
510	DRILL AND TAP		5-29-07	TRW
615	ROLLMARK CALIBER		5-29-07	CW
618	ROTO-BLAST		5-29-07	LB
620	APPLY COATINGS		5-30-07	W
625	FINAL ASSEMBLY		6-5-07	RTL
640	FUNCTION TEST AND	PASS FAIL	6-6-07	TRW
650	TARGET	PASS FAIL	6-6-07	TRW
	MALFUNCTION	CORRECTION		
	MALFUNCTION	CORRECTION		
	MALFUNCTION	CORRECTION	N/A	
	MALFUNCTION	CORRECTION	6-6-07	Fm
670	FINAL INSPECTION		6-7-07	RTL
	A) HEADSPACE	PASS FAIL	6-7-07	RTL
	B) TRIGGER PULL (+/- .5 LBS, MIN 2.50 LBS, MAX 4.0 LBS)	2.36 2.27 2.25 2.28 2.31	6-6-07	DA
680	F) SAFETY ON FORCE (2 LBS MIN, 10 LBS MAX)	6 6 6	6-6-07	DA
	G) SAFETY OFF FORCE (2 LBS MIN)	3.5 3.5 3.5	6-6-07	DA
	I) FIRING PIN INDENT (.020)	.023 .023 .023	6-6-07	DA
690	PACK		6-7-07	DA

AVERAGE PULL FORCE BETWEEN INITIAL & CYCLE TESTS
2.50 LBS (plus or minus 0.50 LBS)
3.00 LBS (plus or minus 0.75 LBS)
4.00 LBS (plus or minus 1.00 LBS)

DATE 4-18-07

TESTER TRW

	2.50 LBS INITIAL	2.50 LBS AFTER 50 CYCLES	FINAL TEST & TO RESET 2.50 LBS		COMMENTS
PULL #1	2.44	2.27		2.76	
PULL #2	2.44	2.31		2.80	
PULL #3	2.63	2.41		2.76	
PULL #4	2.78	2.36		2.70	
PULL #5	2.58	2.34		2.68	
TOTAL	12.87	11.69		13.70	
AVERAGE	2.57	2.33		2.74	

	3.00 LBS INITIAL	3.00 LBS AFTER 20 CYCLES		COMMENTS
PULL #1	3.18	3.18		
PULL #2	3.35	3.42		
PULL #3	3.57	3.37		
PULL #4	3.63	3.32		
PULL #5	3.55	3.29		
TOTAL	17.28	16.58		
AVERAGE	3.45	3.31		

	4.00 LBS INITIAL	4.00 LBS AFTER 20 CYCLES	MAX SETTING GREATER THAN 4 LBS	RESET TO 4 LBS FOR TARGET & ACCURACY
PULL #1	4.16	4.15		3.95
PULL #2	4.22	4.17		4.04
PULL #3	4.14	4.19		3.96
PULL #4	4.13	4.20		4.03
PULL #5	4.19	4.19		3.99
TOTAL	20.84	20.90		19.97
AVERAGE	4.16	4.18		3.99

CONFIDENTIAL-SUBJECT TO PROTECTIVE ORDER
KINZER V. REMINGTON

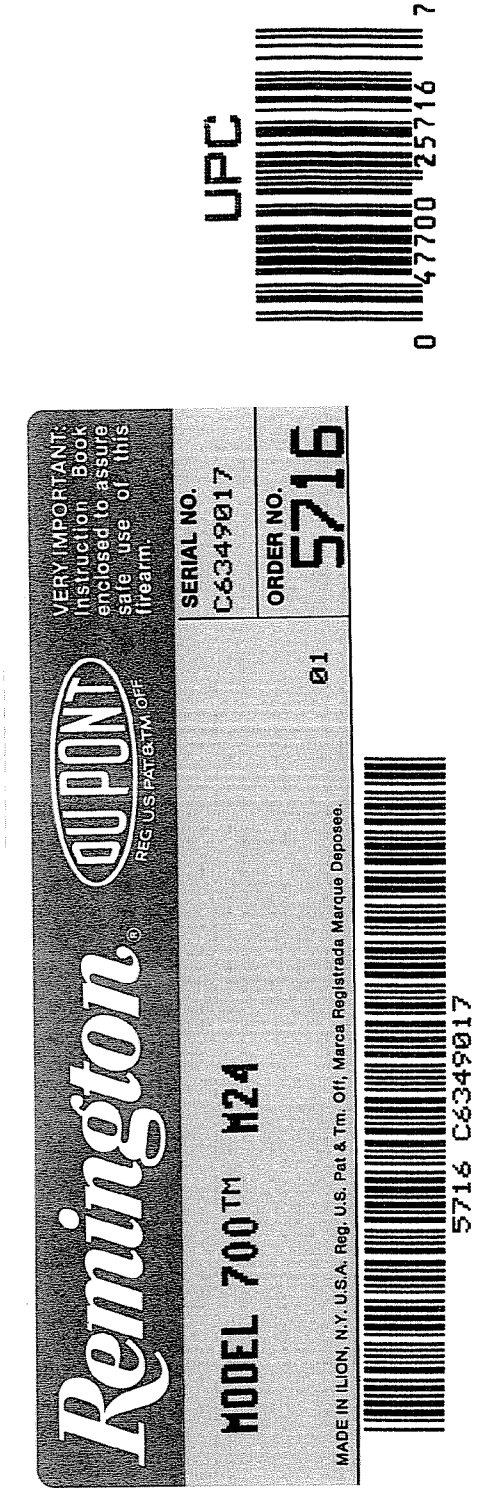
UPC
0 47700 25716 7
Remington®
DUPONT
REG. U.S. PAT. & TM. OFF.
VERY IMPORTANT: Instruction Book enclosed to assure safe use of this firearm.
MODEL 700™ M24
SERIAL NO.
C6349017
ORDER NO.
5716
01
MADE IN ILION, N.Y. U.S.A. Reg. U.S. Pat. & Tm. Off., Marca Registrada. Marque Deposee.
5716 C6349017

M-24

CONTRACT # DAAA21-87-C-0086

GUN SERIAL # C6349017

OP. #	OP. NAME	READINGS	DATE	INIT
575 & 580	Assemble Action and Stock	3 31	90	RW
600	Proof	3 31	90	RW
607	Check Headspace	3 31	90	RW
610	Dis-assemble Gun	3 31	90	RW
612	Magnaflux Barrel Action	4-2-90		KCR
	Magnaflux Bolt	4-2-90		KCR
615	Rollmark Caliber	4-2-90		GA
617	Drill and Tap Sight Holes		4/4/90	FB
618	Polish Barrel RB		4/5/90	WB
620	Apply Coatings (Barrel Action)		4-9-90	TA
	Apply Coating (Bolt)			
625	Final Assembly A) Clean inside of Bolt Assembly		4/18/90	RW
	B) Inspect Rear Firing Pin Hole for Chamfer in Bolt Head		4/18/90	RW
	C) Inspect Ejector Hole for Chamfer		4/18/90	RW
	D) Oil Firing Pin Ass'y		4/18/90	RW
	E) Adjust Trigger Pull to Min Setting and Stake		4/26/90	JH

op. #	OP. NAME	READINGS					DATE	INIT
625 cont.	F) Safety On Force	4	4	4			4/26/90	JH
	G) Safety Off Force	3	3	3			4/26/90	JH.
	H) Trigger Pull Test & Retainability						4/26/90	JH
	I) Firing Pin Indent	.0225	.022	.022			4/26/90	JH
	J) Assemble Stock						4/30/90	RW
	K) Assemble Swivel Studs						5/1/90	WB
	L) Attach Front and Rear Sight Assemblies						4/30/90	RW
	M) Iron Sight Alignment						4/30/90	RW
	N) Detach Front & Rear Sights & place in numbered container						4/30/90	RW
	O) Attach Scope to Rifle						4/30/90	JH
	P) Detach & Attach Scope 20 Times						4/30/90	JH
640	Gallery Target & Test						4-30-90	DH
	A) Time						4-30-90	AC
	B) Malfunctions						4-30-90	AC
	C) Pierced Primers						4-30-90	AC
	D) Optical Clearity of Scope						4-30-90	AC
645	Inspect for Live Ammo						4-30-90	AC
655	Final Inspection A) Headspace						5/1/90	WB
	B) Trigger Pull	2.57	2.63	2.62	2.63	2.63	5/1/90	WB
	C) Function						5/1/90	WB
660	Pack						6-19-90	DH

SWS TRIGGER PULL TEST

AVERAGE PULL FORCE BETWEEN
INITIAL & CYCLE TESTS
2.50# ± .50#
3.00# ± .75#
4.00# ± 1.00#

SERIAL NO C6349017
DATE 4/26/90
TESTER JLL

	2.50# INITIAL	2.50# AFTER 50 CYCLES	FINAL TEST & TO RESET 2.50#		COMMENTS
PULL #1	2.32	2.38	2.40	2.57	MIN. SETTING,
PULL #2	2.33	2.38	2.43	2.63	NO AVG. OF 5
PULL #3	2.24	2.33	2.38	2.62	READINGS ACCEPT-
PULL #4	2.31	2.35	2.33	2.63	ABLE LESS THAN 2#
PULL #5	2.33	2.38	2.30	2.63	
TOTAL	11.53	11.82	11.84		
AVG.	2.306	2.364	2.368		

	3.00# INITIAL	3.00# AFTER 20 CYCLES		COMMENTS
PULL #1	3.40	3.35		
PULL #2	3.43	3.31		
PULL #3	3.41	3.36		
PULL #4	3.43	3.35		
PULL #5	3.43	3.40		
TOTAL	17.10	16.77		
AVG.	3.42	3.354		

	4.00# INITIAL	4.00# AFTER 20 CYCLES	MAX SETTING GREATER THAN 4#	RESET TO 4# FOR TARGET & ACCURACY
PULL #1	4.16	4.23		4.15
PULL #2	4.28	4.29		4.19
PULL #3	4.27	4.02		4.25
PULL #4	4.18	4.20		4.20
PULL #5	4.18	4.27		4.25
TOTAL	21.07	21.01		21.04
AVG.	4.214	4.202		4.208

CONFIDENTIAL-SUBJECT TO PROTECTIVE ORDER
KINZER V. REMINGTON

CENTROIDAL DISTANCE CALCULATIONS
FOR RIFLE # C6349017
1 May 1990

CENTROIDAL DISTANCES

0	TO	1	.372839
1	TO	2	.365168
1	TO	3	.480925
1	TO	4	.177418
1	TO	5	.399091

5 4 1 2 3 <----POA

THE AVERAGE X-COORDINATE FOR THIS RIFLE IS: -.3484
THE AVERAGE Y-COORDINATE FOR THIS RIFLE IS: .0402
THE RESULTING AVERAGE POI RADIUS FOR THIS RIFLE IS: .350712

THE AMR FOR THIS RIFLE IS: .9232

1 May 1990 FILE:/PATTERNING/CENTERFIRE_PATT/06345017

CENTERFIRE PATTERNS # 1

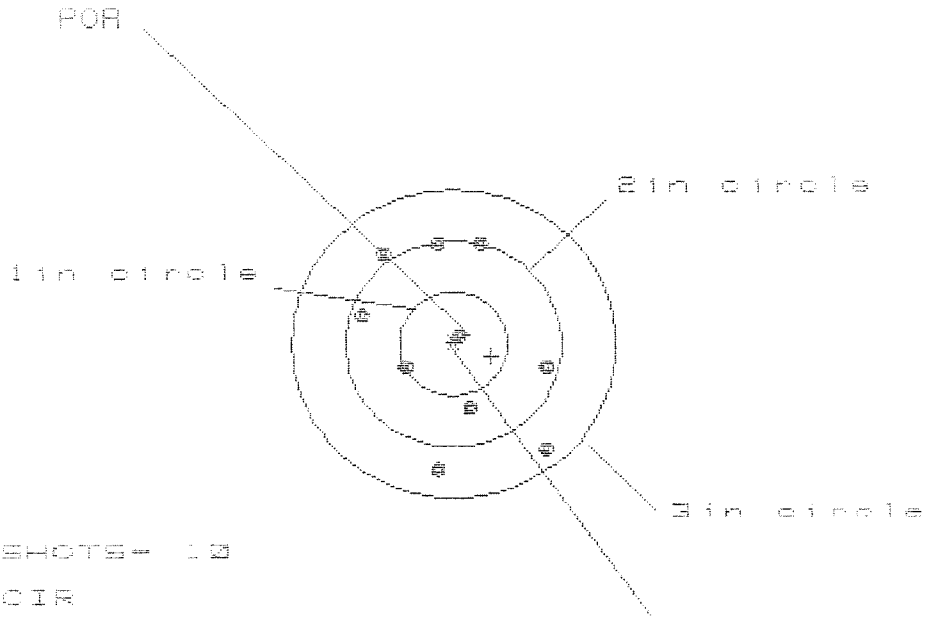

OF SHOTS= 10

IN CIR

1in = 2

2in = 6

3in = 10

HS= 1.598

VS= 2.233

CS= 2.415

PATTERN #	:	[redacted]	
SHOTS (BEST OF)	:	10	9	8
MAXIMUM X	:	.897	.928	.927
MINIMUM X	:	-.798	-.699	-.700
MAXIMUM Y	:	1.004	.896	.729
MINIMUM Y	:	-1.229	-1.337	-.913
CENTROID X	:	-.353	-.453	-.452
CENTROID Y	:	.120	.228	.395
POA TO CENTROID in.	:	.373	.507	.600
MIN RADIUS	:	.127	.151	.218
MEAN RADIUS	:	.863	.800	.727
MAX RADIUS	:	1.323	1.337	1.047
HORIZONTAL SPREAD	:	1.696	1.627	1.627
VERTICAL SPREAD	:	2.233	2.233	1.642
EXTREME SPREAD	:	2.415	2.257	1.827

NUMBER IN ONE INCH CIRCLE = 2

NUMBER IN TWO INCH CIRCLE = 6

NUMBER IN THREE INCH CIRCLE = 10

1 May 1990 FILE:/PATTERNING/CENTERFIRE_PATT/08345017

CENTERFIRE PATTERNS # 2

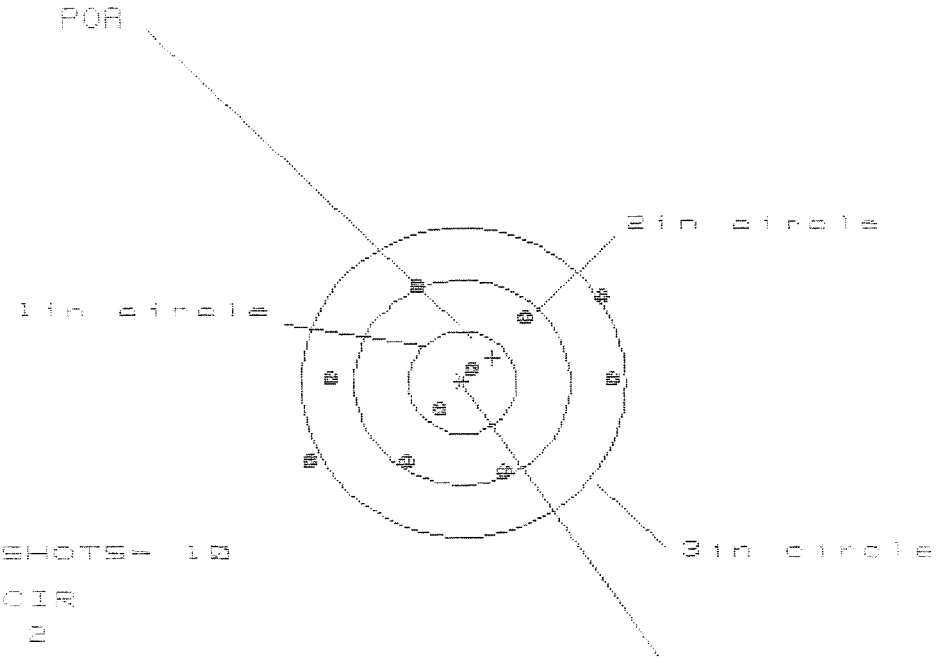

OF SHOTS= 10

# IN CIR
1in = 2
2in = 6
3in = 8

HS= 2.755
VS= 1.720
GS= 3.085

PATTERN #	:	2	
SHOTS (BEST OF)	:	10	9	8
MAXIMUM X	:	1.359	1.204	1.344
MINIMUM X	:	-1.396	-1.382	-1.242
MAXIMUM Y	:	.896	.817	.912
MINIMUM Y	:	-.824	-.903	-.808
CENTROID X	:	-.281	-.126	-.266
CENTROID Y	:	-.238	-.159	-.254
POA TO CENTROID in.	:	.369	.203	.368
MIN RADIUS	:	.186	.117	.194
MEAN RADIUS	:	.992	.922	.854
MAX RADIUS	:	1.568	1.384	1.344
HORIZONTAL SPREAD	:	2.755	2.586	2.586
VERTICAL SPREAD	:	1.720	1.720	1.720
EXTREME SPREAD	:	3.085	2.636	2.586
NUMBER IN ONE INCH CIRCLE	=		2	
NUMBER IN TWO INCH CIRCLE	=		6	
NUMBER IN THREE INCH CIRCLE	=		8	

1 May 1990 FILE:/PATTERNING/CENTERFIRE_PATT/C0349017

CENTERFIRE PATTERNS # 3

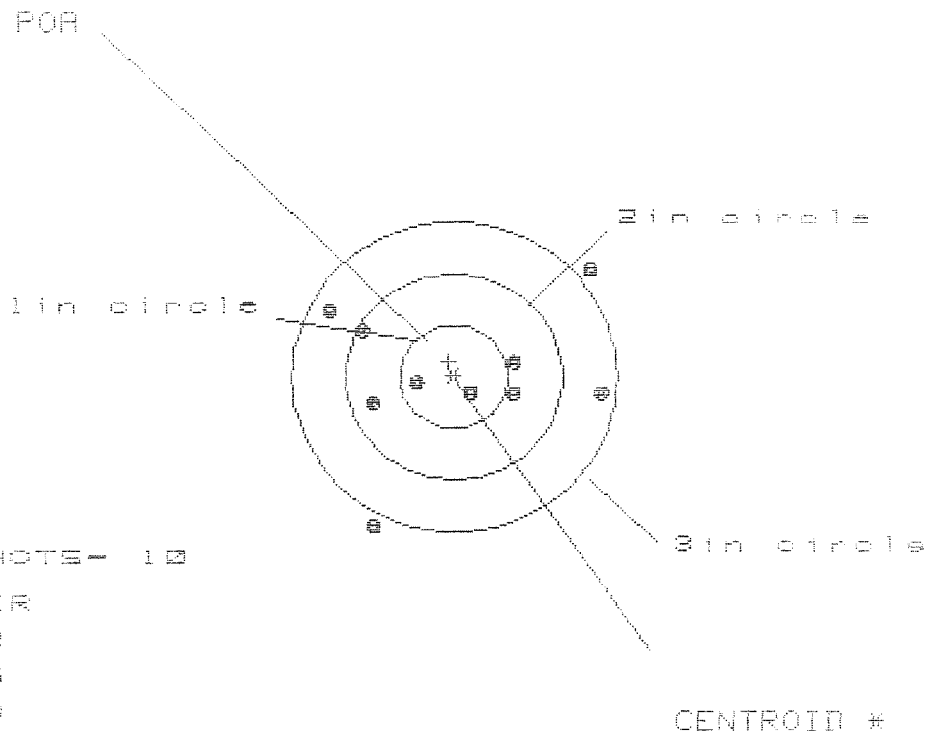

OF SHOTS= 10

IN CIR

1in = 2

2in = 6

3in = 8

HS= 2.457

VS= 2.478

GS= 3.164

PATTERN #	:	3	
SHOTS (BEST OF)	:	10	9	8
MAXIMUM X	:	1.309	1.228	1.372
MINIMUM X	:	-1.148	-1.229	-1.085
MAXIMUM Y	:	1.033	.872	.561
MINIMUM Y	:	-1.445	-.386	-.277
CENTROID X	:	.047	.128	-.016
CENTROID Y	:	-.147	.014	-.095
POA TO CENTROID in.	:	.154	.129	.096
MIN RADIUS	:	.214	.348	.285
MEAN RADIUS	:	.927	.859	.757
MAX RADIUS	:	1.620	1.447	1.394
HORIZONTAL SPREAD	:	2.457	2.457	2.457
VERTICAL SPREAD	:	2.478	1.258	.838
EXTREME SPREAD	:	3.164	2.586	2.586

NUMBER IN ONE INCH CIRCLE = 2

NUMBER IN TWO INCH CIRCLE = 6

NUMBER IN THREE INCH CIRCLE = 8

1 May 1990 FILE:/PATTERNING/CENTERFIRE_PATT/C8349017

CENTERFIRE PATTERNS # 4

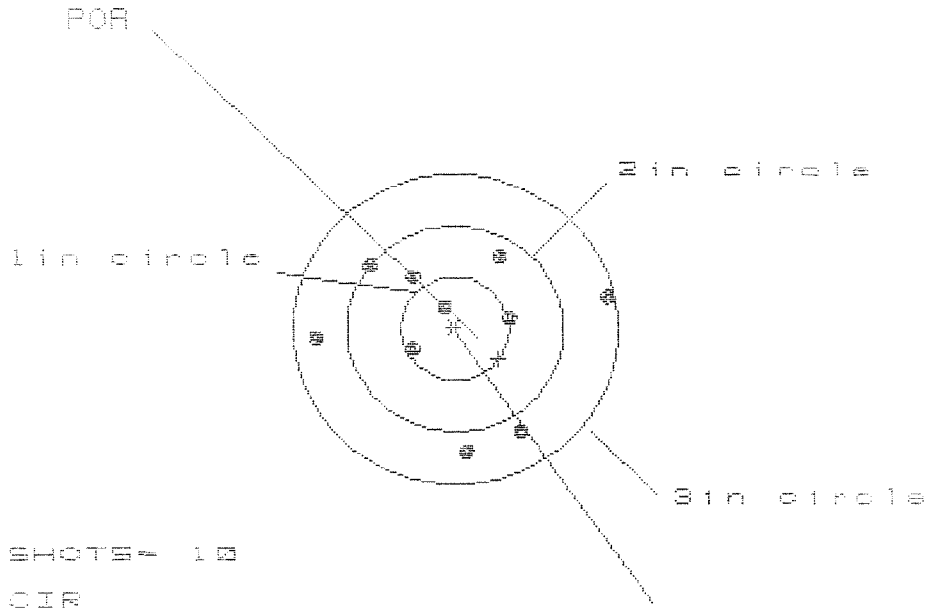

OF SHOTS= 10

# IN CIR
1in = 2
2in = 5
3in = 10

HS= 2.690
VS= 1.920
GS= 2.720

PATTERN #	:	4	
SHOTS (BEST OF)	:	10	9	8
MAXIMUM X	:	1.395	.731	.589
MINIMUM X	:	-1.295	-1.140	-.798
MAXIMUM Y	:	.747	.780	.770
MINIMUM Y	:	-1.173	-1.140	-1.149
CENTROID X	:	-.407	-.562	-.420
CENTROID Y	:	.289	.256	.266
POA TO CENTROID in.	:	.499	.618	.497
MIN RADIUS	:	.260	.257	.277
MEAN RADIUS	:	.874	.798	.754
MAX RADIUS	:	1.427	1.192	1.160
HORIZONTAL SPREAD	:	2.690	1.871	1.387
VERTICAL SPREAD	:	1.920	1.920	1.920
EXTREME SPREAD	:	2.720	2.097	2.097
NUMBER IN ONE INCH CIRCLE	=		2	
NUMBER IN TWO INCH CIRCLE	=		5	
NUMBER IN THREE INCH CIRCLE	=		10	

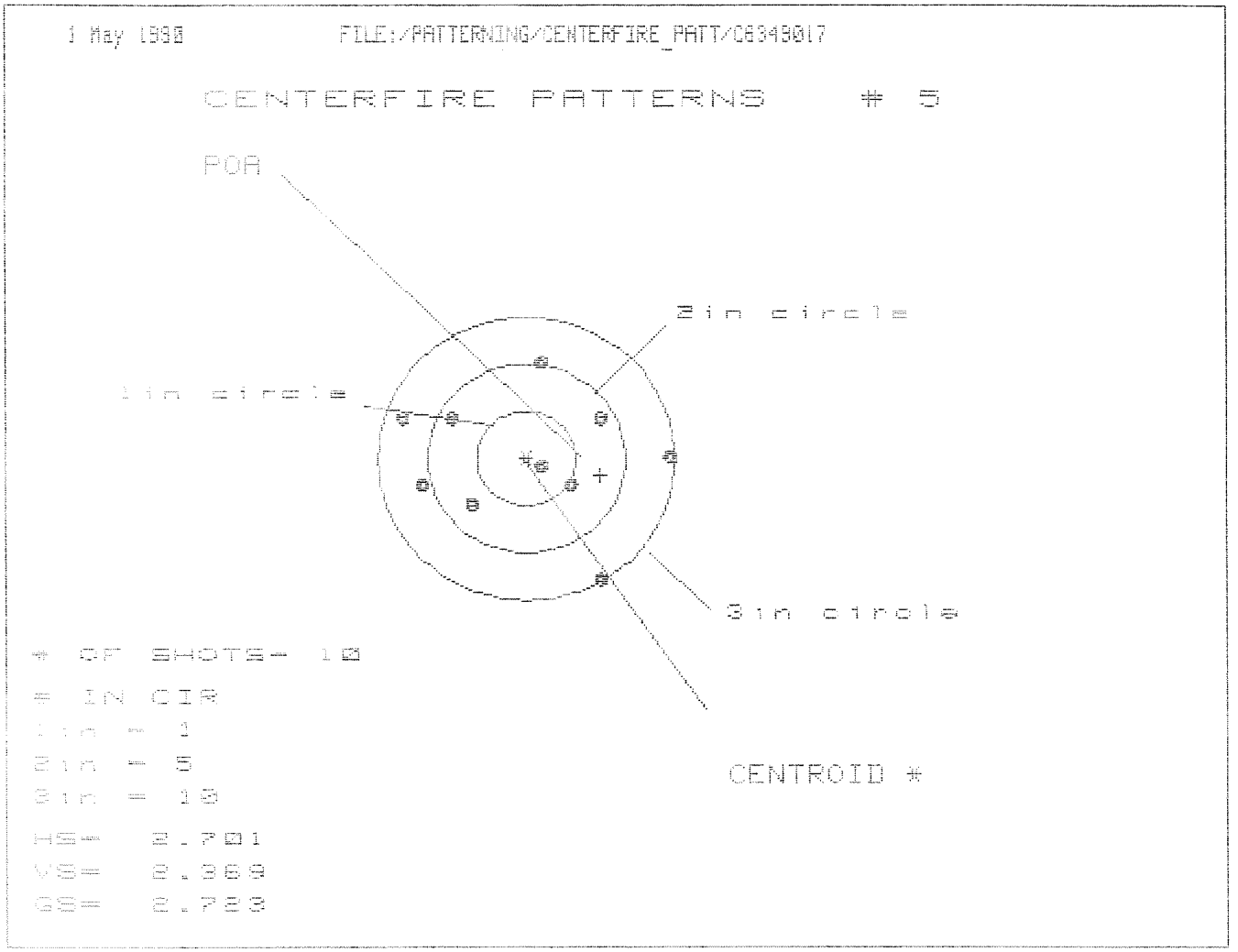

PATTERN #	:	5		
SHOTS (BEST OF)	:	10	9	8
MAXIMUM X	:	1.440	1.521	1.025
MINIMUM X	:	-1.260	-1.180	-.990
MAXIMUM Y	:	1.054	.907	.897
MINIMUM Y	:	-1.315	-.602	-.612
CENTROID X	:	-.748	-.829	-1.019
CENTROID Y	:	.177	.324	.334
POA TO CENTROID in.	:	.769	.889	1.072
MIN RADIUS	:	.129	.271	.438
MEAN RADIUS	:	.960	.903	.818
MAX RADIUS	:	1.500	1.523	1.055
HORIZONTAL SPREAD	:	2.701	2.701	2.015
VERTICAL SPREAD	:	2.369	1.509	1.509
EXTREME SPREAD	:	2.723	2.723	2.015
NUMBER IN ONE INCH CIRCLE	=		1	
NUMBER IN TWO INCH CIRCLE	=		5	
NUMBER IN THREE INCH CIRCLE	=		10	

Arms Services Repair & Estimate System

BARBER - M24 0105742

File Add Repair Estimate Repair Expedite Repair Inquiry Repair Tools CSR Tools Reports Table Maintenance System Maintenance Help

Repair Inquiry

Repair Number: RE00059518

Verify Repair

Serial: C6349017 Model 700 Center Fire Caliber: 7.62 NATO M-24 (SWS)

Repairman:

Status: Closed 1/13/2003 2:28:08 PM

Address Information

Customer: Received From

Name: B CO 1 22 IN BN

Address 1:

Address 2: PO Box:

City: FORT HOOD

State: TX Zip Code: 76544 Country: US

Return To: Received From

B CO 1 22 IN BN

PO Box:

FORT HOOD

State: TX Zip Code: 76544 Country: US

FFL:

Contact / Condition | Problems | Estimate | History / Status | Shipping / Billing

Contact Information

Phone:

Fax:

Email:

Comments:

Received Condition

Poor

Condition Notes:

CSR Notes:

Accessories Received

Code	Desc	Qty
A007	With Stud	1
A010	Hard Case	1
A017	Scope Base	1
A026	Scope	1
X	FRT & REAR SGT BA	1

Repair Search | Refresh | Close

nagletj 1/13/2003 2:48 PM CAPS NUM INS SCRL

start 2 Mic... Arms S... 2 Int... Microso... PartSe... GAP Lo... MECHA... 2:48 PM

Serial Number: C6349017

Model: 700

RE00059518

SNIPER WEAPON SYSTEM - UNIQUE STATISTICAL INFOMATION

FIREARM SERIAL NUMBER / DATASET NAME: C6349017.__0
FILE DATE AND TIME: 01/25/2003 10:38

THE FOLLOWING DATA IS ALL REPORTED IN UNITS OF INCHES

The Average X Centroid of the Five Target Set:	-0.017
The Average Y Centroid of the Five Target Set:	-0.004
The Average Point of Impact of the Five Target Set:	0.017
The Average Mean Radius of the Five Target Set:	0.746
The Distance from POA to Centroid Target #1:	0.228
The Distance from Centroid Target #2 to Centroid Target #1:	0.336
The Distance from Centroid Target #3 to Centroid Target #1:	0.150
The Distance from Centroid Target #4 to Centroid Target #1:	0.361
The Distance from Centroid Target #5 to Centroid Target #1:	0.339

SERIAL NUMBER: C6349017.__0
TARGET NUMBER: 1
FILE DATE: 01/25/2003
FILE TIME: 10:38

X CENTROID:	-0.010
Y CENTROID:	0.228
POA TO CENTROID:	0.228
HORZ SPREAD:	1.541
VERT SPREAD:	2.995
GROUP SPREAD:	3.167
MIN RADIUS:	0.415
MAX RADIUS:	1.775
MEAN RADIUS:	0.902
# IN 1 IN DIAMETER:	2
# IN 2 IN DIAMETER:	7
# in 3 IN DIAMETER:	9

POINT#	X	Y
1:	0.406	-0.810
2:	-0.279	-1.527
3:	-0.555	-0.251
4:	-0.416	0.320
5:	-0.788	0.736
6:	-0.662	0.674
7:	0.753	0.534
8:	0.371	0.650
9:	0.317	0.483
10:	0.751	1.468

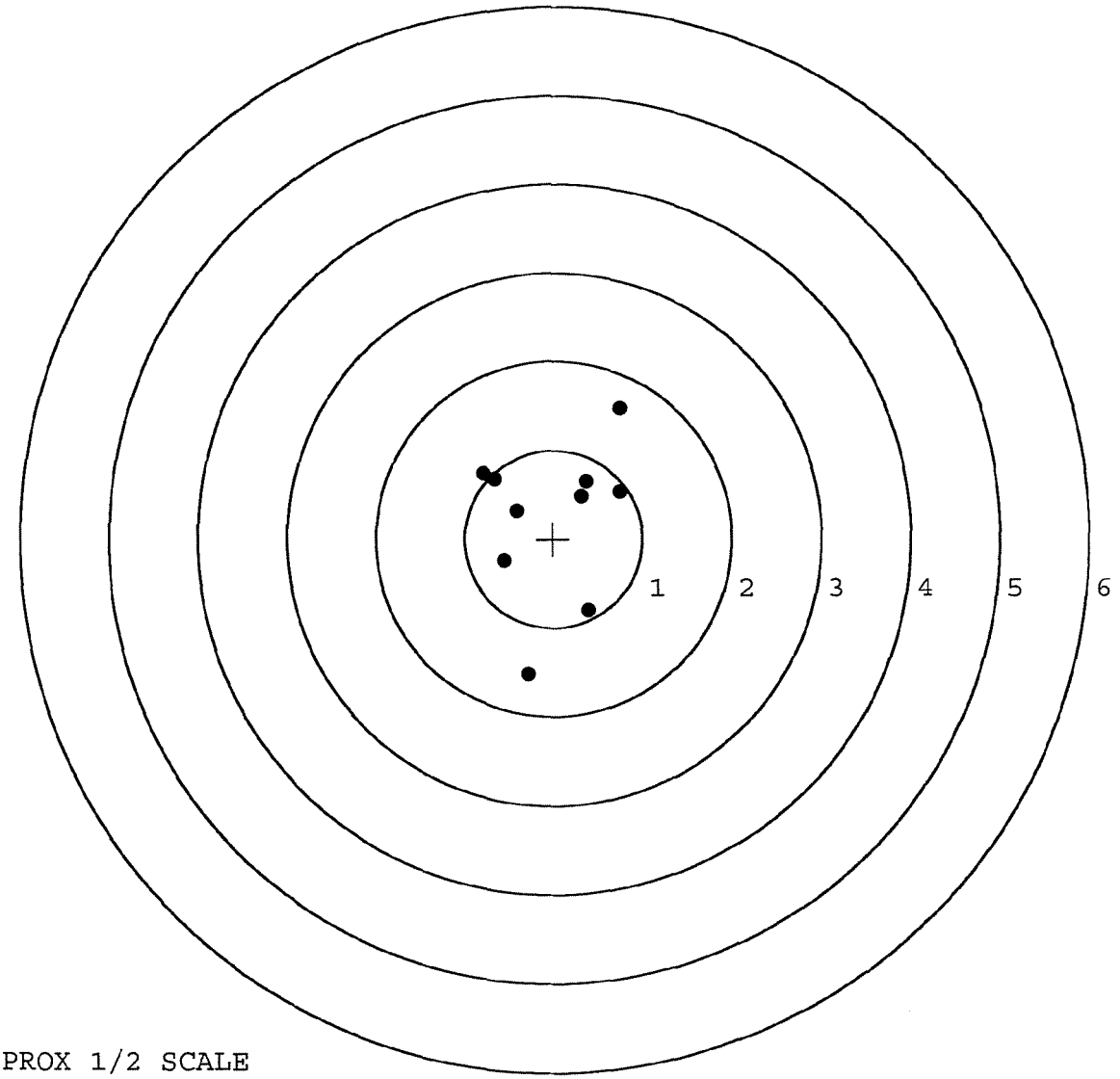

TARGET APPROX 1/2 SCALE

BARBER - M24 0105745

SERIAL NUMBER: C6349017.__0
TARGET NUMBER: 2
FILE DATE: 01/25/2003
FILE TIME: 10:38

X CENTROID:	-0.007
Y CENTROID:	-0.108
POA TO CENTROID:	0.108
HORZ SPREAD:	1.038
VERT SPREAD:	3.059
GROUP SPREAD:	3.075
MIN RADIUS:	0.249
MAX RADIUS:	1.600
MEAN RADIUS:	0.796
# IN 1 IN DIAMETER:	5
# IN 2 IN DIAMETER:	6
# in 3 IN DIAMETER:	9

POINT#	X	Y
1:	0.616	-1.202
2:	-0.333	-1.674
3:	0.489	-0.284
4:	0.117	-0.324
5:	-0.312	-0.473
6:	-0.310	-0.141
7:	-0.041	0.231
8:	0.143	0.347
9:	-0.422	1.055
10:	-0.018	1.385

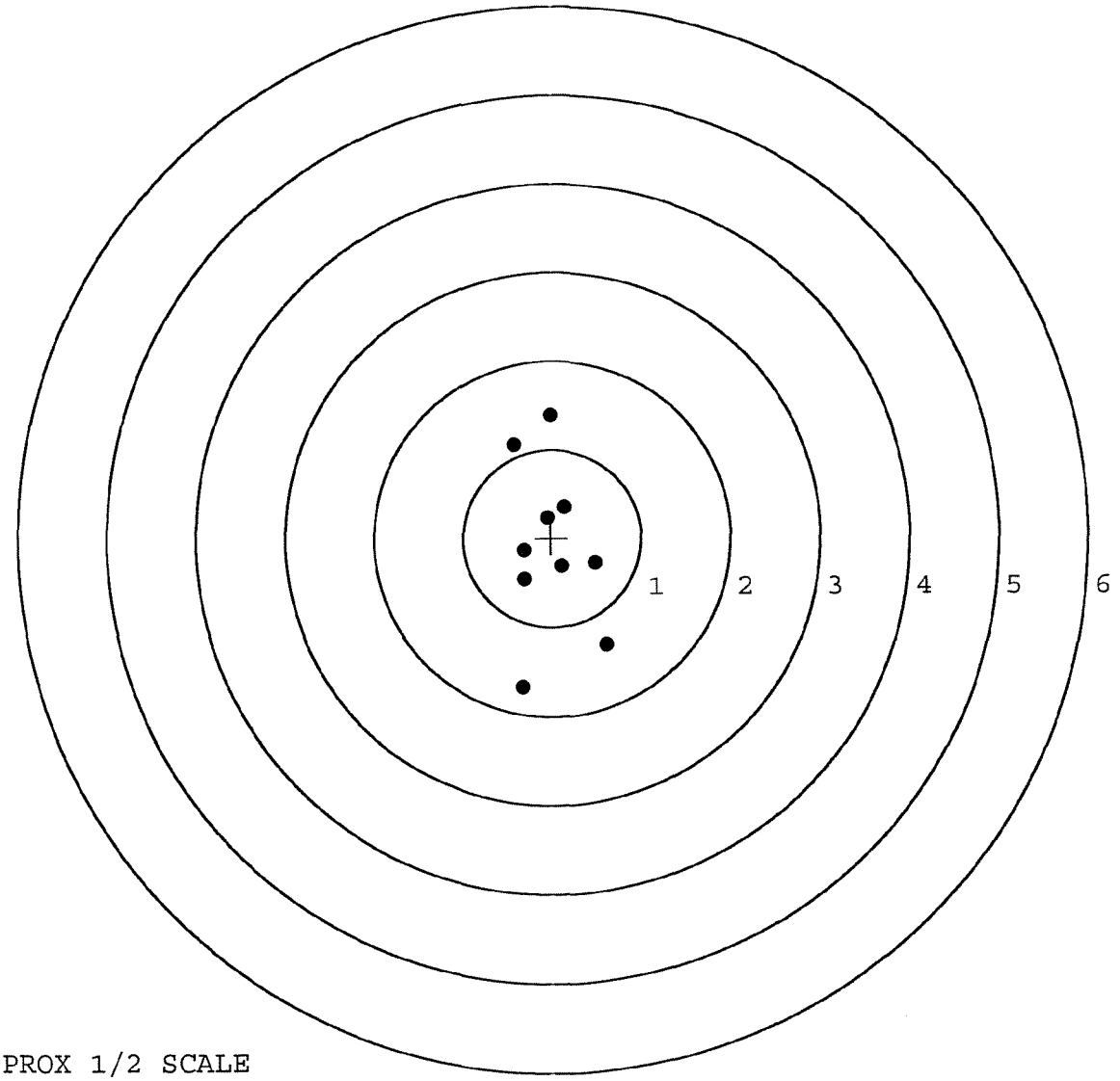

TARGET APPROX 1/2 SCALE

SERIAL NUMBER: C6349017.__0
TARGET NUMBER: 3
FILE DATE: 01/25/2003
FILE TIME: 10:38

X CENTROID:	-0.093
Y CENTROID:	0.103
POA TO CENTROID:	0.139
HORZ SPREAD:	1.090
VERT SPREAD:	3.336
GROUP SPREAD:	3.401
MIN RADIUS:	0.187
MAX RADIUS:	2.179
MEAN RADIUS:	0.843
# IN 1 IN DIAMETER:	3
# IN 2 IN DIAMETER:	7
# in 3 IN DIAMETER:	9

POINT#	X	Y
1:	0.141	-1.096
2:	0.306	-0.881
3:	0.146	-0.832
4:	0.083	-0.320
5:	-0.209	-0.068
6:	-0.267	0.173
7:	-0.784	0.197
8:	0.061	0.707
9:	0.111	0.911
10:	-0.521	2.240

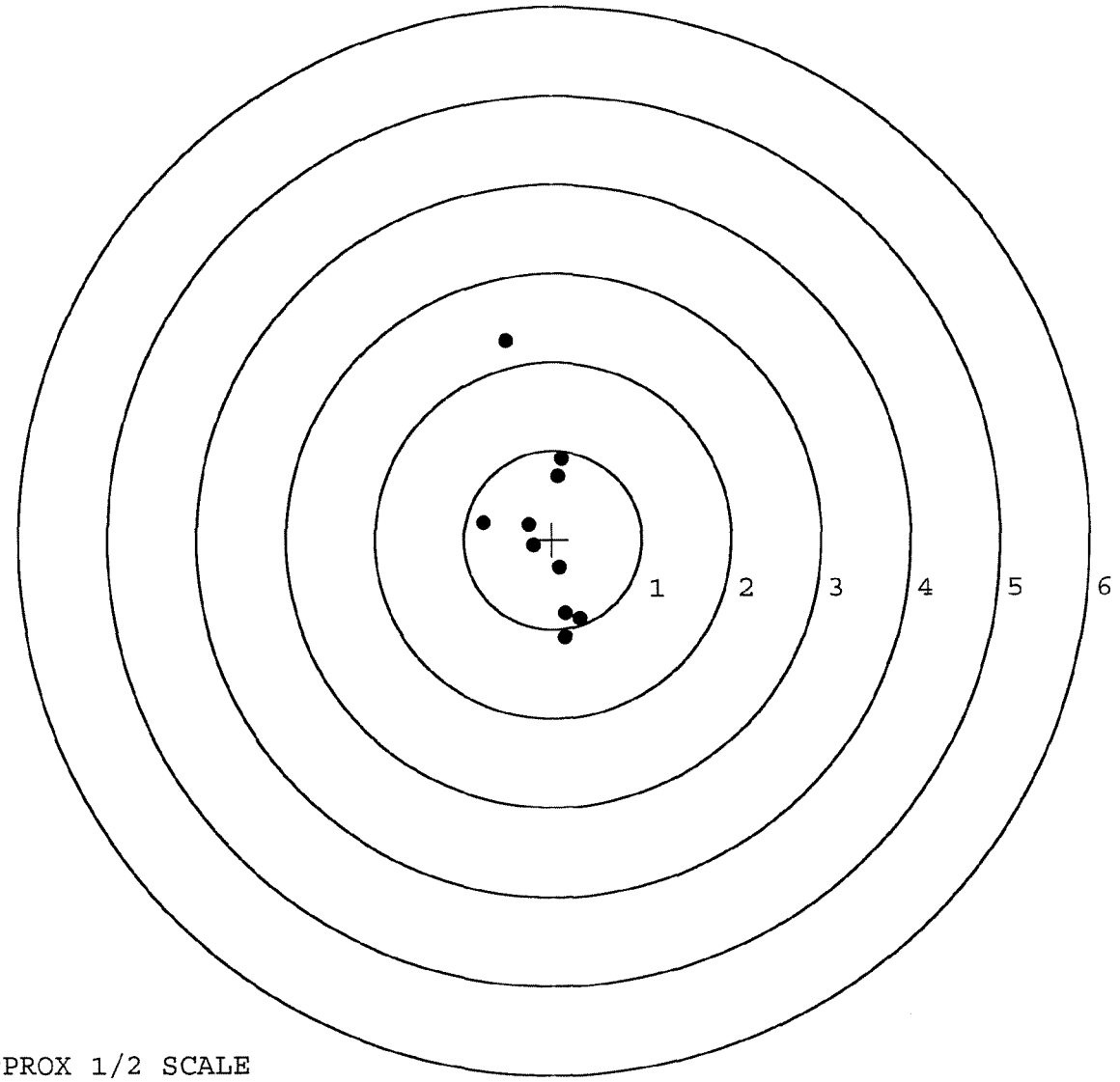

TARGET APPROX 1/2 SCALE

SERIAL NUMBER: C6349017.__0
TARGET NUMBER: 4
FILE DATE: 01/25/2003
FILE TIME: 10:38

X CENTROID:	0.022
Y CENTROID:	-0.132
POA TO CENTROID:	0.134
HORZ SPREAD:	1.221
VERT SPREAD:	1.378
GROUP SPREAD:	1.474
MIN RADIUS:	0.331
MAX RADIUS:	0.869
MEAN RADIUS:	0.624
# IN 1 IN DIAMETER:	2
# IN 2 IN DIAMETER:	9
# in 3 IN DIAMETER:	9

POINT#	X	Y
1:	0.729	-0.268
2:	0.260	-0.661
3:	0.158	-0.732
4:	0.061	-0.461
5:	-0.492	-0.671
6:	-0.366	-0.050
7:	-0.118	0.515
8:	-0.364	0.646
9:	0.332	0.493

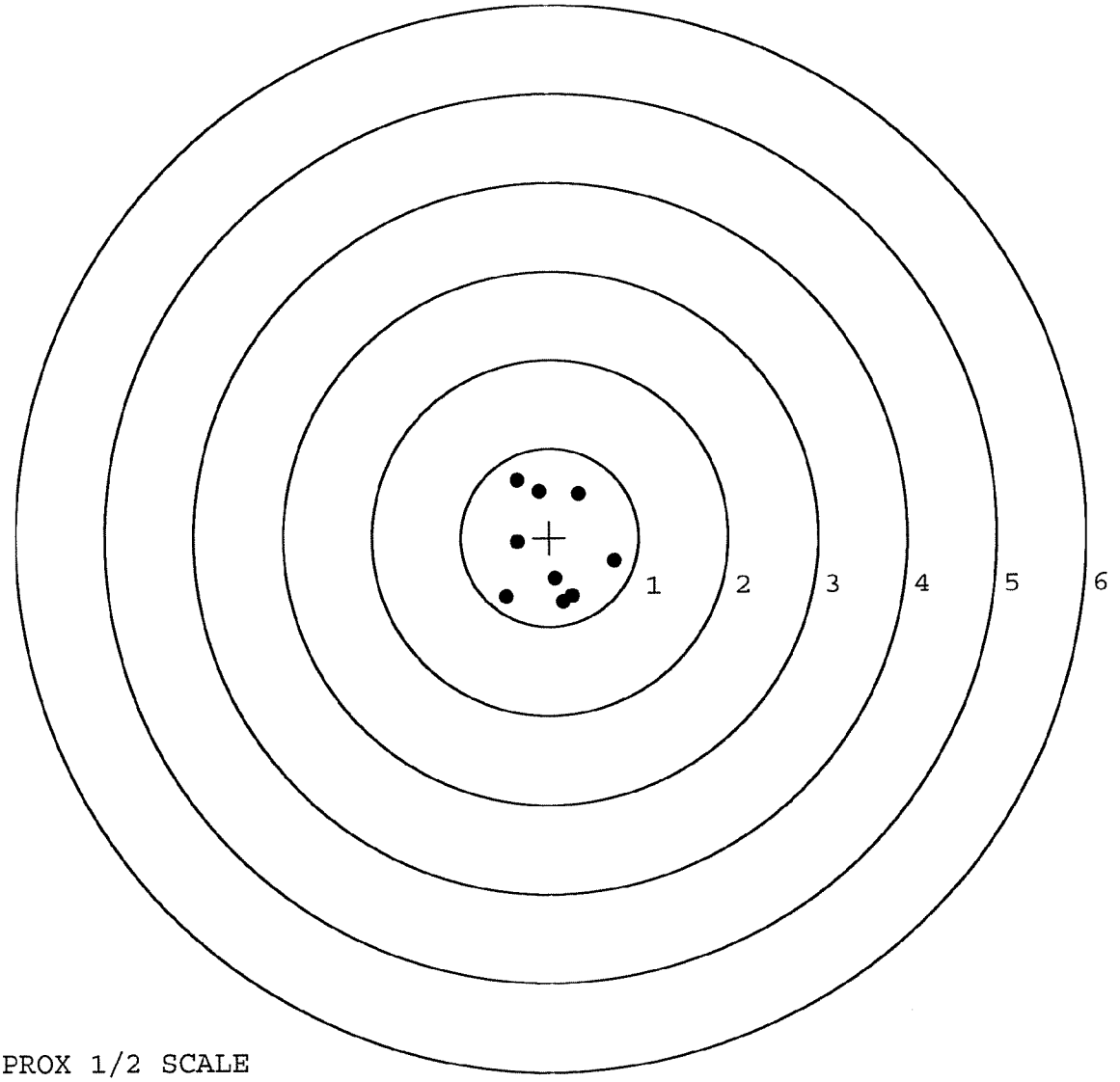

TARGET APPROX 1/2 SCALE

SERIAL NUMBER: C6349017.__0
TARGET NUMBER: 5
FILE DATE: 01/25/2003
FILE TIME: 10:38

X CENTROID:	0.005
Y CENTROID:	-0.111
POA TO CENTROID:	0.111
HORZ SPREAD:	1.189
VERT SPREAD:	1.544
GROUP SPREAD:	1.587
MIN RADIUS:	0.080
MAX RADIUS:	0.985
MEAN RADIUS:	0.565
# IN 1 IN DIAMETER:	4
# IN 2 IN DIAMETER:	10
# in 3 IN DIAMETER:	10

POINT#	X	Y
1:	0.527	-0.682
2:	0.254	-0.665
3:	0.279	-0.308
4:	0.053	-0.174
5:	0.014	-0.495
6:	-0.336	-0.083
7:	-0.662	-0.430
8:	-0.510	0.270
9:	0.271	0.600
10:	0.160	0.862

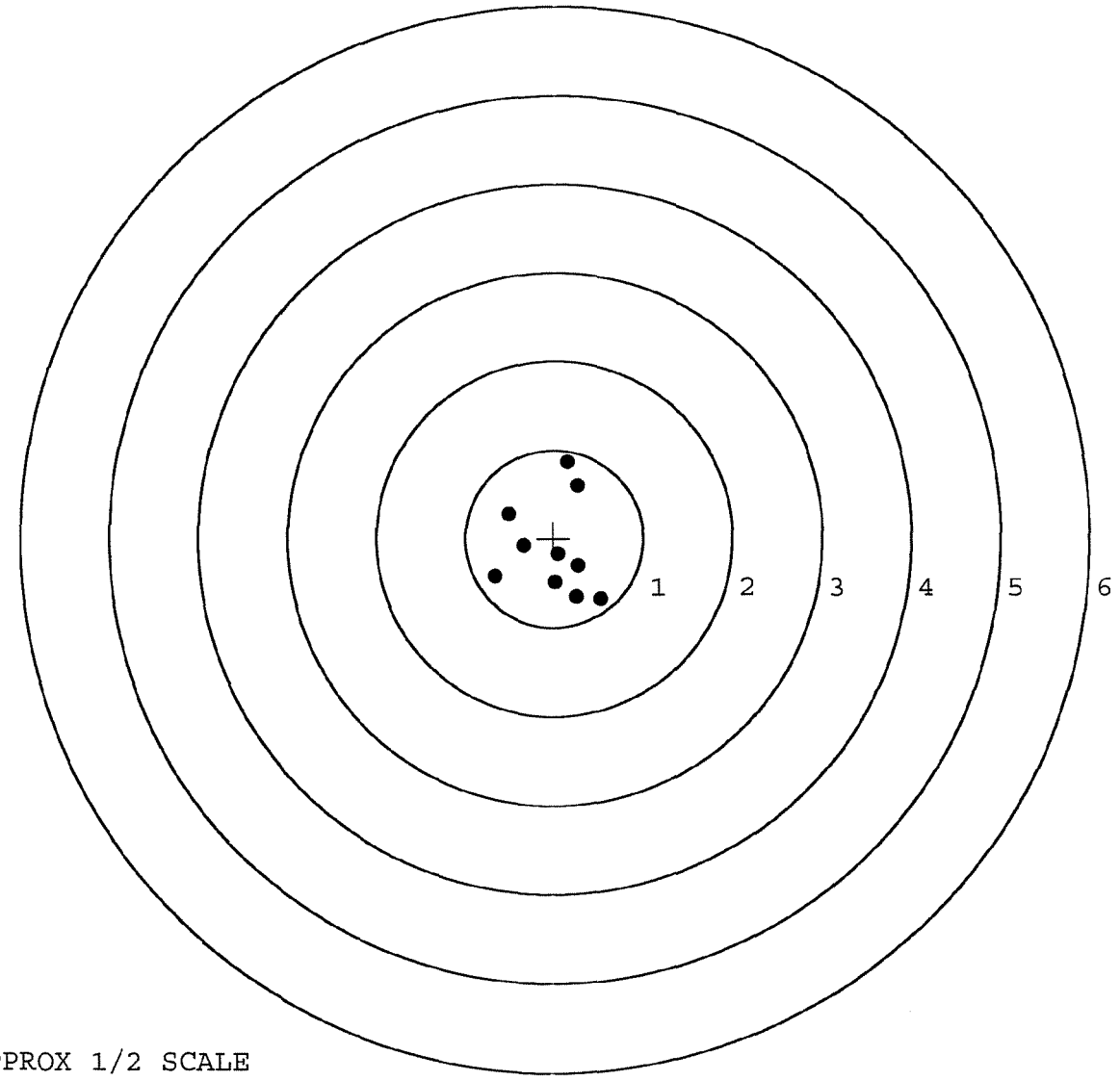

TARGET APPROX 1/2 SCALE

M-24 INSPECTION CHECKLIST
CONTRACT #: DAAE-20-02-D-0127

R & E NUMBER	00059518		
SERIAL NUMBER	C6349017		
LOG-IN DATE			
INSPECT AND VERIFY:			
OPERATION #	OPERATION NAME	DATE	INITIAL
550	DIS-ASSEMBLE GUN	1/14/03	RW
560 A	RE-BARREL	1/15/03	DA
B	DRILL AND TAP	1-20-03	TRW
575	ASSEMBLE	1-15-03	RL
600	PROOF	1-16-03	RW
605	CHECK HEADSPACE	1-16-03	RW
610	DIS-ASSEMBLE GUN	1-16-03	RW
612	MAGNAFLUX		
615	ROLLMARK CALIBER		
618	ROTO-BLAST	1-21-03	JH
620	APPLY COATINGS	1-22	TA
625 A	FINAL ASSEMBLY	1-23-03	RTL
B	TRIGGER PULL TEST		
C	SAFETY "ON" FORCE		
D	SAFETY "OFF" FORCE		
E	FIRING PIN INDENT		
640	TARGET	1-24-03	AC
655	FINAL INSPECT	1-27-03	RW
660	PACK	1-28-03	DA
		SHIP DATE	
	QAR INSPECTION DATE		

MAGNA-FLUX INSPECTED JAN 17 2003 OPERATOR RL

MAINTENANCE REQUEST
For use of this form, see DA PAM 738-750 and 738-751; the proponent agency is DCSLOG

PAGE NO	NO OF PAGES	REQUIREMENT CONTROL SYMBOL CSGLD-1047(*R1*)
Ø1	Ø1	

SECTION I - CUSTOMER DATA

1a. UIC CUSTOMER	1b. CUSTOMER UNIT NAME	1c. PHONE NO
WAN4T0	HHC 1-22	287-1211

2a. SAMS-2 UIC/SAMS-I/TDA	2b. UTILIZATION CODE	2c. MCSR

SECTION II - MAINTENANCE ACTIVITY DATA

3a. WORK ORDER NUMBER (*WON*)	3b. SHOP	3c. PHONE NO

4a. UIC SUPPORT UNIT	4b. SUPPORT UNIT NAME

SECTION III - EQUIPMENT DATA

5. TYPE MNT REQ CODE	6. ID	7. NSN
		1005012402136

8. MODEL M24

9. NOUN Sniper Rifle

10a ORG WON/DOC NO	10b. EIC

11. SERIAL NUMBER	12. QTY	13. PD
C634917	Ø1	

14. MALFUNCTION DESCRIPTION (*for DSU, GSU/AVIM, DEPOT use*)

15a. FAILURE DETECTED DURING/WHEN DISCOVERED CODE (*Enter code*) See DA Pamphlets 738-750 and 738-751

15b. FIRST INDICATION OF TROUBLE/HOW RECOGNIZED CODE (*Enter Code*) See DA Pamphlets 738-750 and 738-751

16. MILES/KILOMETERS/HOURS/ROUNDS

M		K	
H		R	

17. PROJECT CODE (*if assigned*)	18. ACCOUNT PROCESSING CODE	19. IN WARRANTY? (*enter Y or N*)	20. ADMIN NO

21. REIMBURSABLE CUSTOMER (*if Intransit customer enter Y or N*)

22. LEVEL OF WORK

23. SIGNATURE

24. DESCRIBE DEFICIENCIES OR SYMPTOMS ON THE BASIS OF COMPLETE CHECKOUT AND DIAGNOSTIC PROCEDURES IN EQUIPMENT TM (*Do not prescribe repairs*)

25. REMARKS P.O.C. PFC Cantu (254) 287-8593

PREPARATION INSTRUCTIONS FOR THIS PAGE

SECTION I

Block 1a. Enter UIC of submitting organization.
Block 1b. Enter name of submitting organization.
Block 1c. Enter number to be called when maint. is completed.
Block 2a. Enter UIC of supporting SAMS-2/SAMS-I/TDA if work is requested while intransit and away from your support maintenance unit.
Block 2b. Enter utilization code. See DA Pamphlets 738-750 and 738-751.
Block 2c. Enter "Y" if reportable under AR 700-138. If not, leave blank.

SECTION II

Leave blank. To be completed by the support maintenance DSU/GSU/AVIM/DEPOT.

SECTION III

Block 5. Enter the Type Maintenance Request Code. See DA Pamphlets 738-750 and 738-751.
Block 6. Enter ID associated with block 7. See DA Pamphlets 738-750 and 738-751.
Block 7. Enter the NSN or stock number of the item being submitted.
Block 8. Enter model of item being submitted.
Block 9. Enter noun/nomenclature of item being submitted.
Block 10a. Enter Work Order Number (*WON*)/*DOC NO* assigned when item is submitted. Otherwise, leave blank.
Block 10b. Enter End Item Code. See AMDF.
Block 11. Enter serial number of item being submitted.

SECTION III (*Cont'd*)

Block 12. Enter the quantity of items being submitted.
Block 13. Enter the maintenance priority designator determined from DA PAM 710-2-1.
Block 14. For DSU, GSU/AVIM, DEPOT use.
Block 15a. Enter the code that most accurately describes when the fault or deficiency was detected. See DA Pamphlets 738-750 and 738-751.
Block 15b. Select one. Enter the code. See DA Pamphlets 738-750 and 738-751.
Block 16. Enter the accumulated usage data in blocks, when equipment is subject to usage reporting.
Block 17. Enter the project code if one has been assigned. If not, leave blank.
Block 18. See DA Pamphlets 738-750 and 738-751.
Block 19. Enter "Y" or "N" to indicate whether equipment is still under manufacturer's warranty.
Block 20. Enter the admin number assigned for property control purposes for the equipment being submitted.
Block 21. For DSU/GSU/AVIM/Depot use.
Block 22. Enter level of work performed "O" for UNIT LEVEL/AVUM, "F" for DSU/AVIM, "H" for GSU, "D" for DEPOT, "K" for contractor or "L" for Spc Rpr Act.
Block 23. Enter the signature of the CO or the CO's designated representative when the priority designator is 01-10. For priority designators 11-15, leave blank.
Block 24. Enter a brief description of the deficiencies or symptoms that you feel require attention at this level of maint.
Block 25. Self-explanatory.

34a. SUBMITTED BY	35a. ACCEPTED BY	35c. DATE
JCantu		

34b. DATE	35b. STATUS	35d. TIME

Block 34a. Enter first initial and last name of submitter.
Block 34b. Enter ordinal date submitted (*YYDDD*).
Block 35a. Enter first initial and last name of person accepting maint. request.
Block 35b. Enter the initial status. See DA Pamphlets 738-750 and 738-751.
Block 35c. Enter ordinal date accepted (*YYDDD*).
Block 35d. Enter military time.

DA FORM 2407, JUL 94 PREVIOUS EDITIONS OF DA FORM 2407 AND DA FORM 5504 ARE OBSOLETE RECEIPT COPY 1

EQUIPMENT INSPECTION AND MAINTENANCE WORKSHEET

For use of this form, see DA PAM 738-750 and 738-751; the proponent agency is DCSLOG

1. ORGANIZATION	2. NOMENCLATURE AND MODEL
C Co. 1-22 INF 41D	Deployment Case

3. REGISTRATION/SERIAL/NSN	4a. MILES	b. HOURS	c. ROUNDS FIRED	d. HOT STARTS	5. DATE	6. TYPE INSPECTION
1005-01-260-2662					29 Oct '02	PMCS

7. APPLICABLE REFERENCE

TM NUMBER	TM DATE	TM NUMBER	TM DATE
9-1005-306-10	June 1989		

COLUMN a — Enter TM item number.

COLUMN b — Enter the applicable condition status symbol.

COLUMN c — Enter deficiencies and shortcomings.

COLUMN d — Show corrective action for deficiency or shortcoming listed in Column c.

COLUMN e — Individual ascertaining completed corrective action initial in this column.

STATUS SYMBOLS

"X"—Indicates a deficiency in the equipment that places it in an inoperable status.

CIRCLED "X"—Indicates a deficiency, however, the equipment may be operated under specific limitations as directed by higher authority or as prescribed locally, until corrective action can be accomplished.

HORIZONTAL DASH "(-)"—Indicates that a required inspection, component replacement, maintenance operation check, or test flight is due but has not been accomplished, or an overdue MWO has not been accomplished.

DIAGONAL "(/)"—Indicates a materiel defect other than a deficiency which must be corrected to increase efficiency or to make the item completely serviceable.

LAST NAME INITIAL IN BLACK, BLUE-BLACK INK, OR PENCIL-Indicates that a completely satisfactory condition exists.

FOR AIRCRAFT-Status symbols will be recorded in red.

ALL INSPECTIONS AND EQUIPMENT CONDITIONS RECORDED ON THIS FORM HAVE BEEN DETERMINED IN ACCORDANCE WITH DIAGNOSTIC PROCEDURES AND STANDARDS IN THE TM CITED HEREON.

8a. SIGNATURE *(Person(s) performing inspection)*	8b. TIME	9a. SIGNATURE *(Maintenance Supervisor)*	9b. TIME	10. MANHOURS REQUIRED
Cant, Juan P.	1315			

TM ITEM NO. a	STATUS b	DEFICIENCIES AND SHORTCOMINGS c	CORRECTIVE ACTION d	INITIAL WHEN CORRECTED e
1	X	(m) leather sling		
2	X	(m) deployment kit		
3	X	(m) soft carrying case		
4	X	(m) day optic sight case		
5	X	outside latch broken		

DA FORM 1 APR 79 2404 Replaces edition of 1 Jan 64, which will be used

TM ITEM NO. a	STATUS b	DEFICIENCIES AND SHORTCOMINGS c	CORRECTIVE ACTION d	INITIAL WHEN CORRECTED e

*U.S. Government Printing Office: 1994 — 381-865

EQUIPMENT INSPECTION AND MAINTENANCE WORKSHEET

For use of this form, see DA PAM 738-750 and 738-751; the proponent agency is DCSLOG

1. ORGANIZATION	2. NOMENCLATURE AND MODEL
[redacted]C 1-22 INF	M24 Deployment Kit C co

3. REGISTRATION/SERIAL/NSN	4a. MILES	b. HOURS	c. ROUNDS FIRED	d. HOT STARTS	5. DATE	6. TYPE INSPECTION
Deployment Kit					16 OCT 02	PMCS

7. APPLICABLE REFERENCE

TM NUMBER	TM DATE	TM NUMBER	TM DATE
9-1005-306-10	June 89		

COLUMN a — Enter TM item number.

COLUMN b — Enter the applicable condition status symbol.

COLUMN c — Enter deficiencies and shortcomings.

COLUMN d — Show corrective action for deficiency or shortcoming listed in Column c.

COLUMN e — Individual ascertaining completed corrective action initial in this column.

STATUS SYMBOLS

"X"—Indicates a deficiency in the equipment that places it in an inoperable status.

CIRCLED "X"—Indicates a deficiency, however, the equipment may be operated under specific limitations as directed by higher authority or as prescribed locally, until corrective action can be accomplished.

HORIZONTAL DASH "(-)"—Indicates that a required inspection, component replacement, maintenance operation check, or test flight is due but has not been accomplished, or an overdue MWO has not been accomplished.

DIAGONAL "(/)"—Indicates a materiel defect other than a deficiency which must be corrected to increase efficiency or to make the item completely serviceable.

LAST NAME INITIAL IN BLACK, BLUE-BLACK INK, OR PENCIL-Indicates that a completely satisfactory condition exists.

FOR AIRCRAFT-Status symbols will be recorded in red.

ALL INSPECTIONS AND EQUIPMENT CONDITIONS RECORDED ON THIS FORM HAVE BEEN DETERMINED IN ACCORDANCE WITH DIAGNOSTIC PROCEDURES AND STANDARDS IN THE TM CITED HEREON.

8a. SIGNATURE *(Person(s) performing inspection)*	8b. TIME	9a. SIGNATURE *(Maintenance Supervisor)*	9b. TIME	10. MANHOURS REQUIRED
[signature]	1508			

TM ITEM NO. a	STATUS b	DEFICIENCIES AND SHORTCOMINGS c	CORRECTIVE ACTION d	INITIAL WHEN CORRECTED e
1-4d	X	(M) entire Deployment Kit for Co		

DA FORM 1 APR 79 2404 Replaces edition of 1 Jan 64, which will be used

TM ITEM NO. *a*	STATUS *b*	DEFICIENCIES AND SHORTCOMINGS *c*	CORRECTIVE ACTION *d*	INITIAL WHEN CORRECTED *e*

*U.S. Government Printing Office: 1994 — 381-865

CONFIDENTIAL-SUBJECT TO PROTECTIVE ORDER
KINZER V. REMINGTON

EQUIPMENT INSPECTION AND MAINTENANCE WORKSHEET

For use of this form, see DA PAM 738-750 and 738-751; the proponent agency is DCSLOG

1. ORGANIZATION	2. NOMENCLATURE AND MODEL
C Co. 1-22 INF 410	M3A Day Scope

3. REGISTRATION/SERIAL/NSN	4a. MILES	b. HOURS	c. ROUNDS FIRED	d. HOT STARTS	5. DATE	6. TYPE INSPECTION
89 0699					29 Oct 02	PMCS

7. APPLICABLE REFERENCE

TM NUMBER	TM DATE	TM NUMBER	TM DATE
9-1005-306-105	June 1989		

COLUMN a — Enter TM item number.

COLUMN b — Enter the applicable condition status symbol.

COLUMN c — Enter deficiencies and shortcomings.

COLUMN d — Show corrective action for deficiency or shortcoming listed in Column c.

COLUMN e — Individual ascertaining completed corrective action initial in this column.

STATUS SYMBOLS

"X"—Indicates a deficiency in the equipment that places it in an inoperable status.

CIRCLED "X"—Indicates a deficiency, however, the equipment may be operated under specific limitations as directed by higher authority or as prescribed locally, until corrective action can be accomplished.

HORIZONTAL DASH "(-)"—Indicates that a required inspection, component replacement, maintenance operation check, or test flight is due but has not been accomplished, or an overdue MWO has not been accomplished.

DIAGONAL "(/)"—Indicates a materiel defect other than a deficiency which must be corrected to increase efficiency or to make the item completely serviceable.

LAST NAME INITIAL IN BLACK, BLUE-BLACK INK, OR PENCIL-Indicates that a completely satisfactory condition exists.

FOR AIRCRAFT-Status symbols will be recorded in red.

ALL INSPECTIONS AND EQUIPMENT CONDITIONS RECORDED ON THIS FORM HAVE BEEN DETERMINED IN ACCORDANCE WITH DIAGNOSTIC PROCEDURES AND STANDARDS IN THE TM CITED HEREON.

8a. SIGNATURE *(Person(s) performing inspection)*	8b. TIME	9a. SIGNATURE *(Maintenance Supervisor)*	9b. TIME	10. MANHOURS REQUIRED
Capt. Juan P.	1325			

TM ITEM NO. a	STATUS b	DEFICIENCIES AND SHORTCOMINGS c	CORRECTIVE ACTION d	INITIAL WHEN CORRECTED e
4		(M) Day Optic Sight Dust		
		Cover, Rear		
6		(M) Day Optic Sight Dust		
		Cover, Front		

DA FORM 1 APR 79 2404 Replaces edition of 1 Jan 64, which will be used

TM ITEM NO. *a*	STATUS *b*	DEFICIENCIES AND SHORTCOMINGS *c*	CORRECTIVE ACTION *d*	INITIAL WHEN CORRECTED *e*

*U.S. Government Printing Office: 1994 — 381-865

CONFIDENTIAL-SUBJECT TO PROTECTIVE ORDER
KINZER V. REMINGTON

NSN# 1005-01-240-2136

EQUIPMENT INSPECTION AND MAINTENANCE WORKSHEET

For use of this form, see DA PAM 738-750 and 738-751; the proponent agency is DCSLOG

1. ORGANIZATION	2. NOMENCLATURE AND MODEL
C co. 1-22 INF 4ID	M24 Sniper Rifle

3. REGISTRATION/SERIAL/NSN	4a. MILES	b. HOURS	c. ROUNDS FIRED	d. HOT STARTS	5. DATE	6. TYPE INSPECTION
C6349017			unknown		29 Oct 02	PMCS

7. APPLICABLE REFERENCE

TM NUMBER	TM DATE	TM NUMBER	TM DATE
9-1005-306-10	June 1989		

COLUMN a — Enter TM item number.

COLUMN b — Enter the applicable condition status symbol.

COLUMN c — Enter deficiencies and shortcomings.

COLUMN d — Show corrective action for deficiency or shortcoming listed in Column c.

COLUMN e — Individual ascertaining completed corrective action initial in this column.

STATUS SYMBOLS

"X"—Indicates a deficiency in the equipment that places it in an inoperable status.

CIRCLED "X"—Indicates a deficiency, however, the equipment may be operated under specific limitations as directed by higher authority or as prescribed locally, until corrective action can be accomplished.

HORIZONTAL DASH "(-)"—Indicates that a required inspection, component replacement, maintenance operation check, or test flight is due but has not been accomplished, or an overdue MWO has not been accomplished.

DIAGONAL "(/)"—Indicates a materiel defect other than a deficiency which must be corrected to increase efficiency or to make the item completely serviceable.

LAST NAME INITIAL IN BLACK, BLUE-BLACK INK, OR PENCIL-Indicates that a completely satisfactory condition exists.

FOR AIRCRAFT-Status symbols will be recorded in red.

ALL INSPECTIONS AND EQUIPMENT CONDITIONS RECORDED ON THIS FORM HAVE BEEN DETERMINED IN ACCORDANCE WITH DIAGNOSTIC PROCEDURES AND STANDARDS IN THE TM CITED HEREON.

8a. SIGNATURE *(Person(s) performing inspection)*	8b. TIME	9a. SIGNATURE *(Maintenance Supervisor)*	9b. TIME	10. MANHOURS REQUIRED
Capt. Juan P.	1315			

TM ITEM NO. a	STATUS b	DEFICIENCIES AND SHORTCOMINGS c	CORRECTIVE ACTION d	INITIAL WHEN CORRECTED e
1	/	barrel needs to be		
		serviced. unknown amount		
		of rounds fired through		
		it. At least three years		
		since last serviced.		
2	/	crack in butt stock near		
		trigger gaurd bottom		
3	/	front sling crew is	SHOP / FIRE CONTROL	
		slightly dented in	A DELETE 4TH	
			CAT FSB	
			COND.CODE ____	

DA FORM 1 APR 79 2404 Replaces edition of 1 Jan 64, which will be used

TM ITEM NO. *a*	STATUS *b*	DEFICIENCIES AND SHORTCOMINGS *c*	CORRECTIVE ACTION *d*	INITIAL WHEN CORRECTED *e*

*U.S. Government Printing Office: 1994 — 381-865

CONFIDENTIAL-SUBJECT TO PROTECTIVE ORDER
KINZER V. REMINGTON