Feb. 12, 1952 M. H. WALKER 2,585,195 (D-1081)

BREECH CLOSING MECHANISM FOR FIREARMS

Filed Jan. 8, 1949 2 SHEETS—SHEET 1

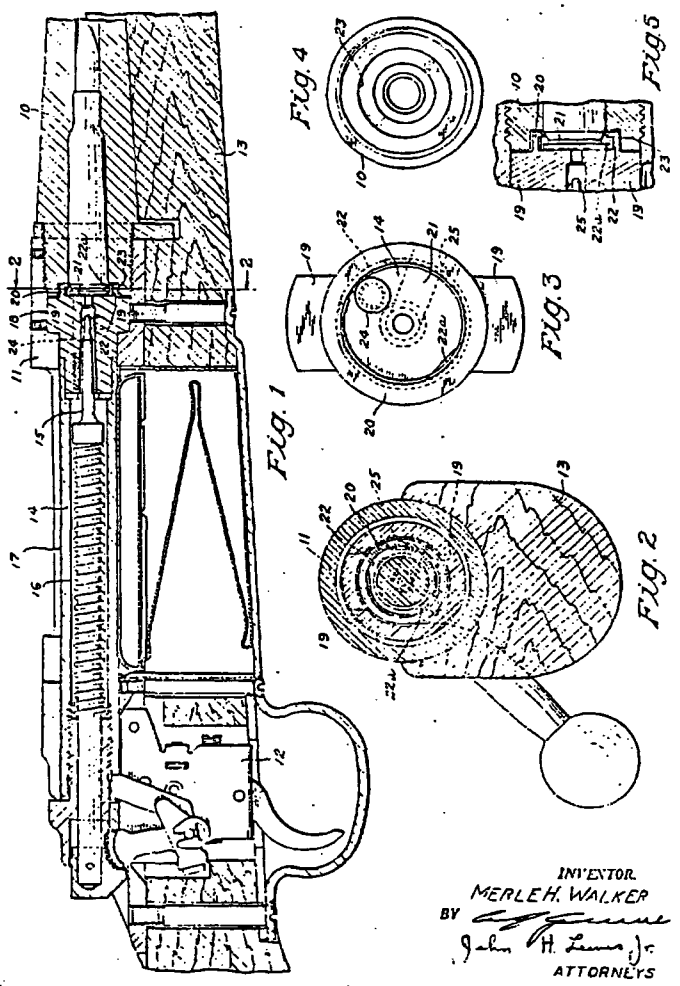

INVENTOR.
MERLE H. WALKER
BY John H. Lewis Jr.
ATTORNEYS

Feb. 12, 1952 M. H. WALKER 2,585,195

BREECH CLOSING CONSTRUCTION FOR FIREARMS

Filed Jan. 8, 1949 2 SHEETS—SHEET 2

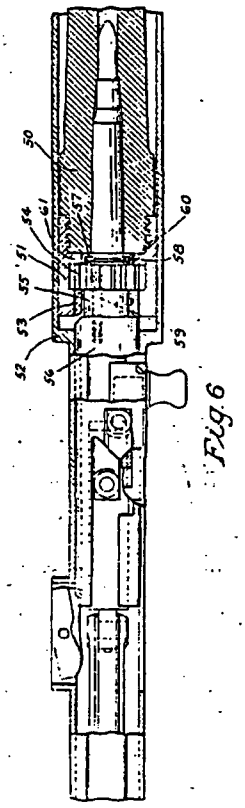

Fig. 6

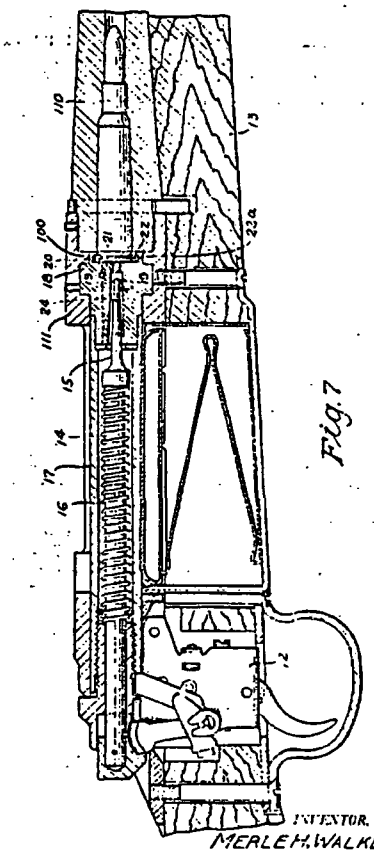

Fig. 7

INVENTOR.
MERLE H. WALKER
BY
John H. Lewis Jr.
ATTORNEYS

BARBER - PRESALE R 0100736

Patented Feb. 12, 1952

2,585,195

UNITED STATES PATENT OFFICE

2,585,195

BREECH CLOSING CONSTRUCTION FOR FIREARMS

Merle H. Walker, Ilion, N. Y., assignor to Remington Arms Company, Inc., Bridgeport, Conn., a corporation of Delaware

Application January 8, 1949, Serial No. 69,968

5 Claims. (Cl. 42—16)

1

This invention relates to firearms and in particular to an improved construction for the breech bolt and barrel of such firearms. The invention is applicable to any firearm in which the breech bolt moves in opening and closing the breech along a straight path substantially coaxial with the barrel or along a straight or non-linear path which comes into substantial alignment with the axis of the barrel at the breech face thereof. Although not absolutely essential, an extractor of the type disclosed and claimed in the application of John D. Howell, Serial No. 644,207, filed January 30, 1946, now Patent No. 2,473,373, issued June 14, 1949, is of great utility in this construction.

Prior art firearms of the type employing fixed metallic ammunition have always been dependent upon the metallic cartridge case for securing obturation with the walls of the barrel chamber and preventing the rearward escape of gas from the barrel. As a result, the head of high intensity center-fire rifle cartridges has always been a massive chunk of brass of usually adequate strength to bridge over gaps between the end of the bolt and the chamber mouth or clearance cuts for extractors, ejectors, and the like. However, in spite of this massive construction, the heads of cartridges, due to metallurgical deficiencies, barrel obstructions, or other difficulties, all too often fail in service, releasing white hot gas at pressures in excess of 50,000 pounds per square inch into the interior of the receiver. With some modern commercial and military rifles the effects of a burst head are disastrous, completely wrecking the action and seriously injuring or killing the shooter. One of the better known military rifles presents in alignment with the shooter's face a straight line passage down the left hand bolt lug guide groove, which, even though the receiver proper does not blow up, channels high pressure gas and fragments of the cartridge head into the location where they can do the most damage. It has been often, and truthfully, said that the strength of most rifles is no greater than that of the head of the cartridges intended for use therein.

The primary object of this invention is the provision of a firearm construction which is not thus dependent upon the strength of a cartridge head, ordinarily formed of a material of relatively low strength by comparison with the ferrous alloys used for the firearm structure.

It is contemplated that this object may be best achieved by providing a recess in the head of the bolt adequate to receive and entirely surround

2

the head of the cartridge case and by providing a reinforcing flange on barrel, barrel extension, or receiver ring into which the flange on the bolt head may fit when the bolt is fully locked. In a preferred embodiment this improvement may be obtained by recessing the end of the barrel in such a fashion as to receive and support the flange defining the recess in the bolt head. Thus, in the remote event of a failure of the supported cartridge head, the bolt flange will, before expansion to a dangerous degree, be supported by and will obturate with the barrel to prevent the escape of gas from the joint.

The exact nature of the invention as well as other objects and advantages thereof will become more apparent from consideration of the following specification referring to the attached drawing, in which:

Fig. 1 is a vertical longitudinal sectional view taken in a plane including the axis of the barrel of a firearm including my invention.

Fig. 2 is a vertical cross-sectional view taken on the line 2—2 of Fig. 1.

Fig. 3 is a front end elevational view of the bolt assembly.

Fig. 4 is a rear end elevational view of the barrel.

Fig. 5 is an enlarged partial longitudinal sectional view including only the bolt head portion of Fig. 1.

Fig. 6 is a horizontal, longitudinal sectional view showing a modified form of my invention.

Fig. 7 is a view similar to Fig. 1, showing another modification.

Referring to the drawing by characters of reference, it may be seen that the firearm illustrated comprises a barrel 10, to which there is secured a receiver 11. A fire control unit 12, which may be that disclosed in application of Walker and Haskell, Serial No. 7,778, filed February 12, 1948, now Patent No. 2,514,981, issued July 11, 1950, is secured to the receiver and the assembly of barrel, receiver, and fire control unit is suitably mounted in a stock 13.

A bolt 14 is provided in the receiver to serve as a closure for the breech end of the barrel and as a support for the firing pin 15 and main spring 16. For economy in construction, the bolt may comprise a tubular body 17 secured, as by a known brazing operation, to a bolt head 18 of high strength alloy steel. The bolt head includes the usual locking lugs 19 and differs from the conventional bolt chiefly in the provision of a continuous annular flange 20 extending forwardly from and encircling the cartridge head engaging

BARBER - PRESALE R 0100736

R2501724

BARBER - PRESALE R 0100737

portion of the bolt face 21. This flange may be recessed as at 22 to accommodate a ring extractor 22a of the type disclosed in the Howell application above referred to, or any other type of extractor may be used which does not require that the continuity of the flange 20 be interrupted. An example of another type of extractor which could be used with slight modification is shown in the patent to Sampson et al., No. 2,493,300. While an annular flange such as the flange 29 would be sufficiently strong to withstand with a good factor of safety the forces imposed thereon under normal conditions, this invention contemplates additional improvement by recessing the end of the barrel at 23 to receive the flange 29. Obviously, a barrel extension of the type used in some conventional recoil actuated firearms, for example, that of Johnson Patent No. 2,143,743, issued February 14, 1939, could be so fitted, as shown in Fig. 6, to provide this extra support in place of a flange integral with the barrel. Referring specifically to this figure, it will be seen that there is provided a barrel 50 threadably or otherwise secured to a barrel extension 51 which is, in this instance, slidably received in a receiver 52. The barrel extension is provided with a plurality of interrupted locking lugs 53 arranged to coact with similar lugs 54 on the rotatable bolt head 55 supported in a reciprocable bolt carrier 56. The means for rotating the bolt are not material here and may be ascertained by consulting the Johnson patent or other known means may be used. As in the case of the Fig. 1 modification, the face of the bolt head 55 is recessed at 57 to receive the head of a cartridge. Within this recess, there are supported an extractor 58 and ejector 59 which may be identical in construction and mounting with those shown in the preceding figures. This recess 57 is, as in Fig. 1, completely defined by a forwardly projecting circumferentially continuous unbroken annulus 60. The only significant difference between this modification and those of the preceding figures is that the continuous annular flange 61 extending rearwardly from the mouth of the barrel chamber in supporting relation to the annulus 60 is, in this case, integral with the barrel extension 51. In this case, the breech end of the barrel is simply faced off square and butted against the forward face of the flange 51, doing away with the necessity for thread qualification in the barrel machining.

Similarly, in the case of arms employing a barrel fixed in the receiver, the forward receiver ring can be modified, as shown in Fig. 7, to provide a continuous annular flange 120 integral with the receiver 111 offering the same support to the bolt flange 22 as that provided by the flange defining the recess 23 in the breech end of the barrel 10 of the preferred modification first described. In this modification, the breech end of the barrel 110 is faced off square and butted against the receiver flange 100. It is also believed to be obvious that in the case of bolt locking arrangements of the non-rotating type, the interfitting flanges may be of other than circular form.

With such an arrangement, if the flange should be expanded as the result of excessive pressure or the imminent failure of a cartridge head, such expansion will cause obturation between the flange and the barrel. This tends to produce a gas seal between these parts and once solid engagement is made, the flange is supported against further expansion by the barrel which is, in turn, supported by the front receiver ring. A spring

loaded plunger type ejector 24 may be mounted in a blind hole in the bolt face 21 without endangering the adequacy of support for the cartridge or providing any opportunity for the escape of gas. The only possible line of escape for gas in the event of a pierced primer or ruptured head is through the firing pin hole which offers a restricted passage which is, as usual, vented through a hole 25 in the bolt head of greater diameter than the firing pin hole into a portion of the receiver communicating with a vent to atmosphere. The bolt vent hole 25 is shown in dotted lines in Fig. 3 and the receiver vent is not shown, as it is conventional and not conveniently located for inclusion in any of these views.

To summarize, it will be seen that a chambered round of ammunition is completely enclosed, there being no lateral openings in the breech face of the barrel or in the annular flange on the bolt face to permit the escape of gas or fragments in the event of a burst cartridge case. The strength of this combination has been demonstrated by tests which involved deliberately plugged barrels and cartridges loaded to normally produce higher than proof test pressures. Under these drastic conditions, where the pressures were high enough to permanently expand the bolt flange into engagement with the barrel recess and prevent manual opening of the breech, there was no failure which would have in any degree endangered a shooter. When this action was sectioned for study, it was found that the cartridge head had been caused to flow, as by a coining operation, into the recess in the bolt head but had not ruptured. Actual damage to the firearm had been confined to the bolt flange and, had the gun been disassembled by removing the barrel in a barrel vise, could have been repaired by the substitution of a new bolt. While the primer had ruptured and gas had escaped through the firing pin hole, the firing pin remained in the bolt body and there was no evidence that gas had escaped in any other way than through the vents provided. The receivers of all contemporary military and sporting firearms were shattered by much less drastic tests in such a way as to seriously, if not fatally, injure a shooter and others who might be near.

While a preferred embodiment has been specifically illustrated and certain obvious modifications have been described, it is not intended that the invention be considered as limited except as required by the claims appended hereto. In these claims "substantially continuous exterior support" afforded to the bolt wall by the rearwardly extending continuous annulus on barrel, barrel extension, or receiver ring is intended to mean an interfitting so close that any substantial distention of the bolt wall will result in actual supporting contact with the interior surface of the reinforcing annulus.

What is claimed is:

1. In a firearm adapted for the firing of cartridges comprising rigid extractible cases, the combination comprising a barrel having therein a chamber adapted to receive the major portion of the case of a cartridge to be fired; a breech bolt having integral therewith a forwardly projecting perimetrically continuous wall defining a recess in the head of said bolt adapted to receive the head portion of a cartridge chambered in said barrel; cartridge extracting means located within the recess bounded by said continuous wall and adapted for operative engagement with the head of said cartridge; and an exterior support means for said bolt wall comprising a rigidly fixed peri-

BARBER - PRESALE R 0100737

R2501725