C-EXP1354

THIS DRAWING OR INFORMATION IS PROPRIETARY INFORMATION TO THE REMINGTON ARMS COMPANY, INC.

DO NOT SCALE THIS DRAWING - WORK TO FIGURES UNLESS OTHERWISE NOTED.
TOLERANCES ON DECIMAL DIMENSIONS ARE:
1 PLACE (.X) - TOLERANCE ± .015
2 PLACE (.XX) - TOLERANCE ± .010
3 PLACE (.XXX) - TOLERANCE ± .005
& ON FRACTIONAL DIMENSIONS ± 1/64
& ON ANGULAR DIMENSIONS ± 00° 30'
FINISHES ARE DESIGNATED BY ROOT MEAN SQUARE (R.M.S.) MICRO-INCH ROUGHNESS VALUES AND ARE THE MAXIMUM ROUGHNESS ACCEPTABLE, UNLESS OTHERWISE SPECIFIED.
FINISH ROUGHNESS TO BE 125√ OR BETTER.

RECOMMENDED MATERIAL AND HEAT TREAT
MATERIAL B-1112
HEAT TREAT
HARDNESS
COLOR BLACK OXIDE
HEAT TREAT AND COLOR TO BE DONE BY REMINGTON

ALTERATIONS

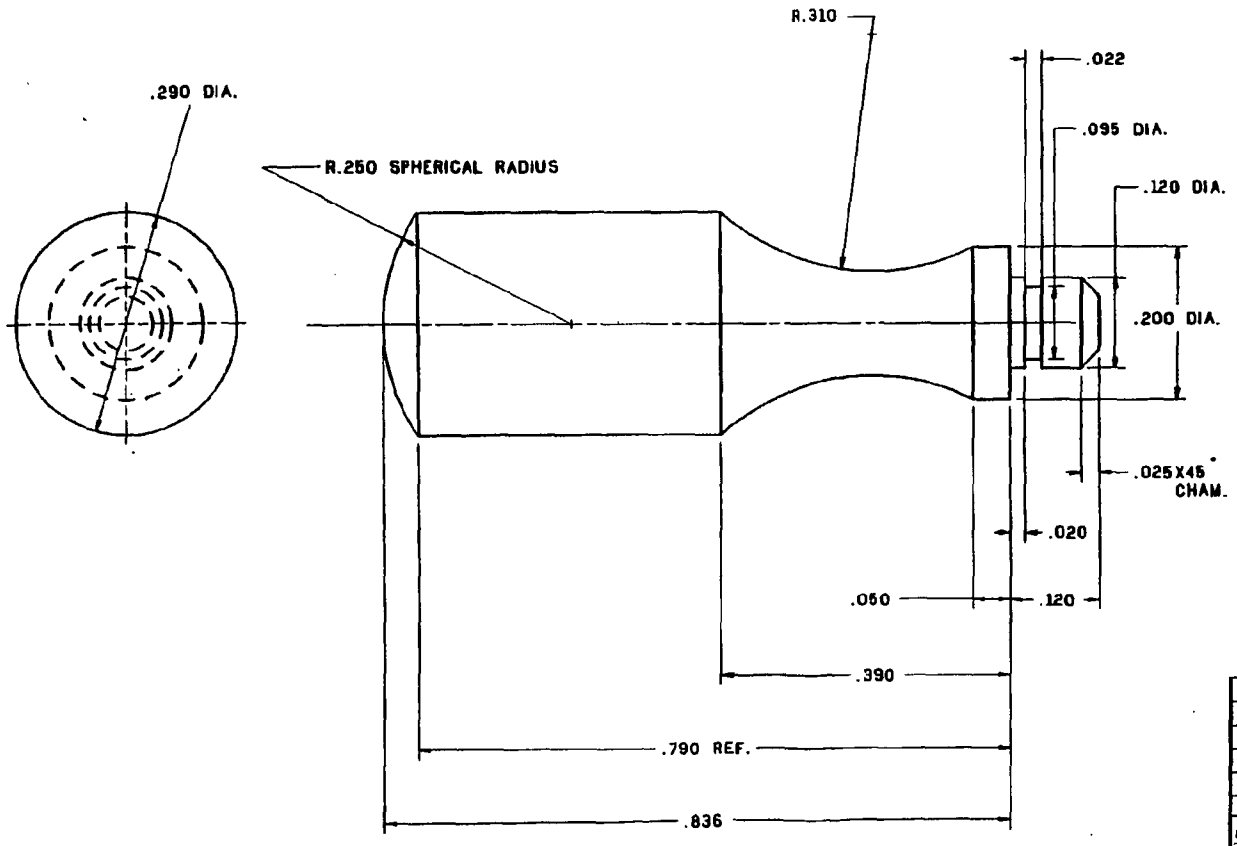


| | | |
|---|---|---|
| NBAR | 1354 | MAGAZINE RELEASE |
| MODEL | PART NO. | PART USE |
| R.S.M. 10/25/84 | T.J.P. 12/17/84 | |

TITLE MAGAZINE RELEASE

C-EXP1354 | SCALE 10X | REMINGTON ARMS CO. INC. ILION RESEARCH DIV.