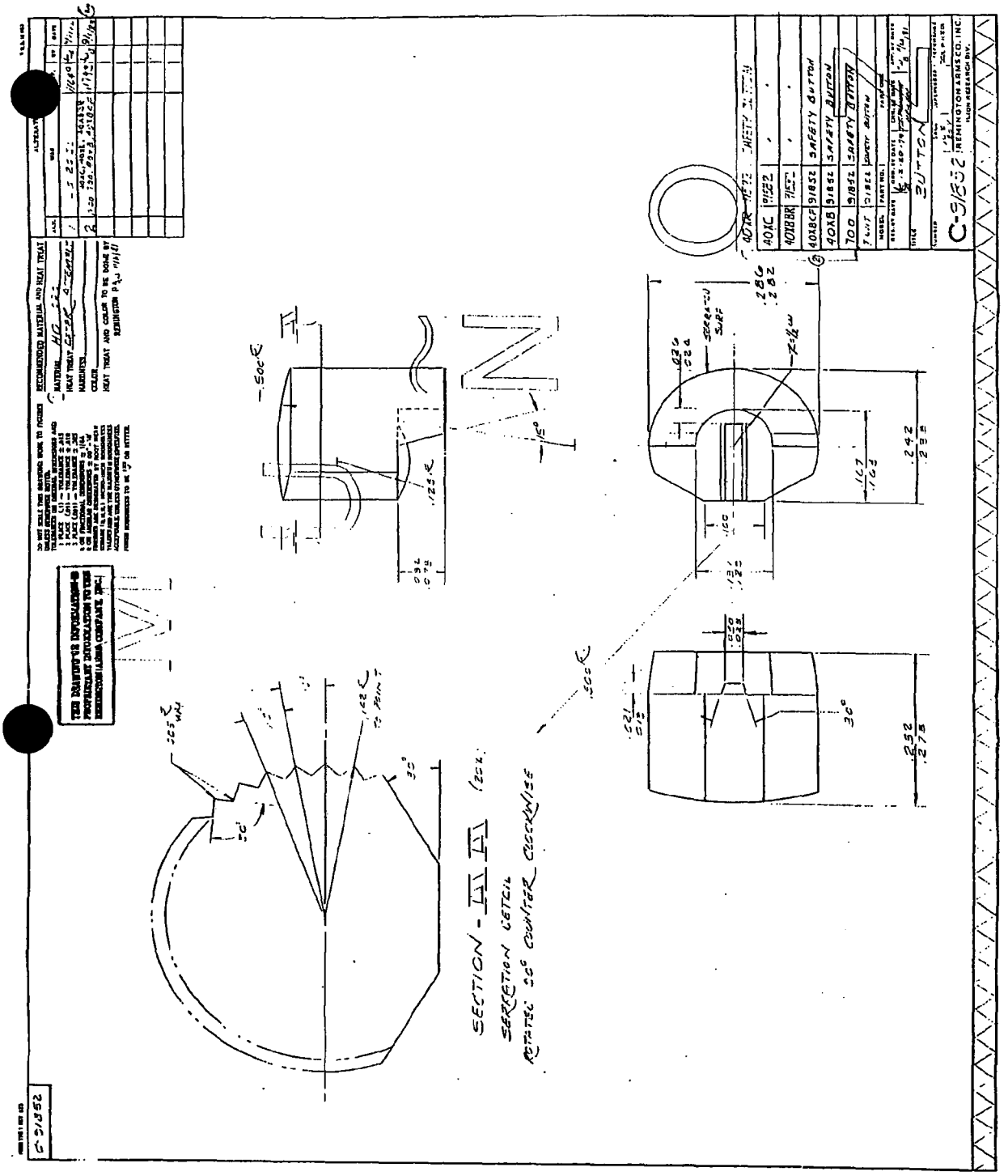
SECTION - A A
SERRATION DETAIL
ROTATED 30° COUNTER CLOCKWISE
BUTTON
C-91852
REMINGTON ARMS CO. INC.
SAFETY BUTTON
SAFETY BUTTON
SAFETY BUTTON
SAFETY BUTTON
SAFETY BUTTON
40XC 91852
40XBCR 91852
40XB 91852
40X 91852
RECOMMENDED MATERIAL AND HEAT TREAT
HEAT TREAT AND COLOR TO BE DONE BY REMINGTON