CONFIDENTIAL

REV	DESCRIPTION	DATE
A	RELEASED AND REDIMENSIONED	

MATERIAL AND HEAT TREAT

MATERIAL: 12M-1-400/0/HR/LV
HEAT TREAT: N/A
COATING: BLACK
FINISH: BLACK OXIDE

SURFACE TEXTURE C-ARMILLES 450 COMPLIANT

NOTES:
1. .020 R ALL EDGES UNLESS OTHERWISE SPECIFIED.

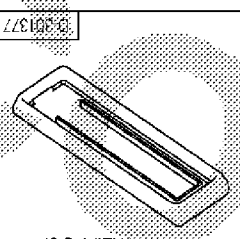

ISO VIEW
SCALE: FULL

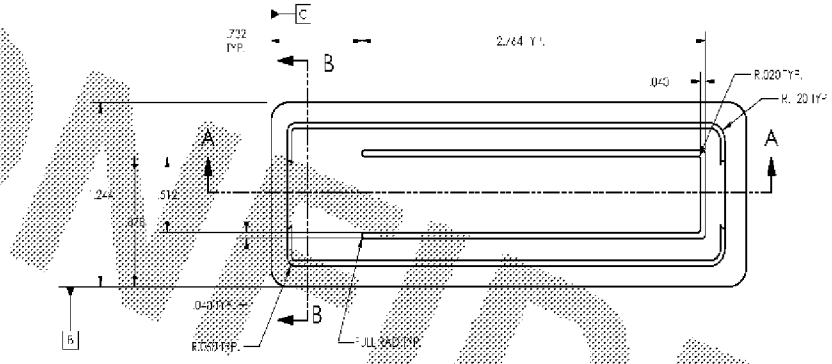

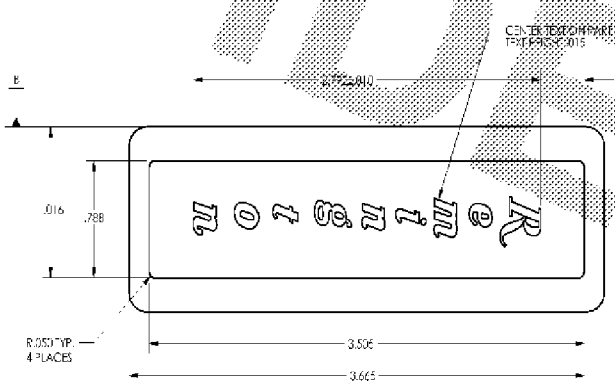

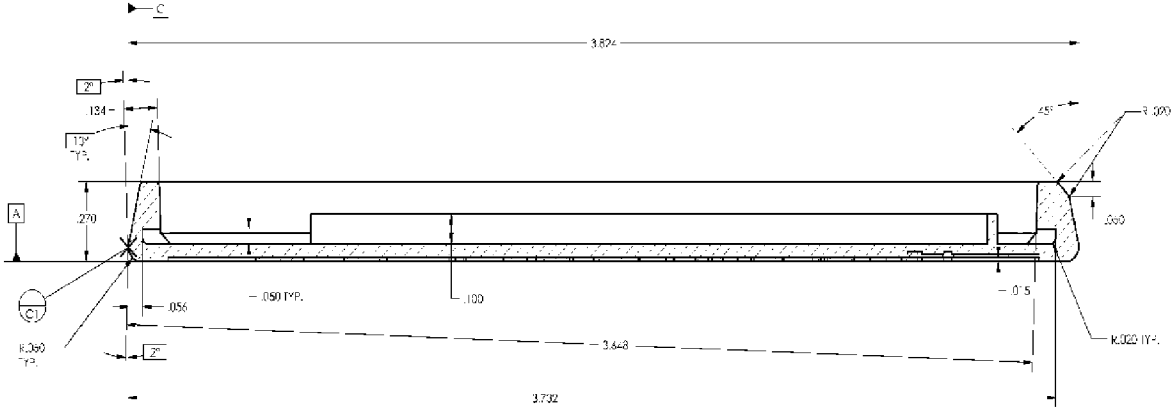

SECTION A-A

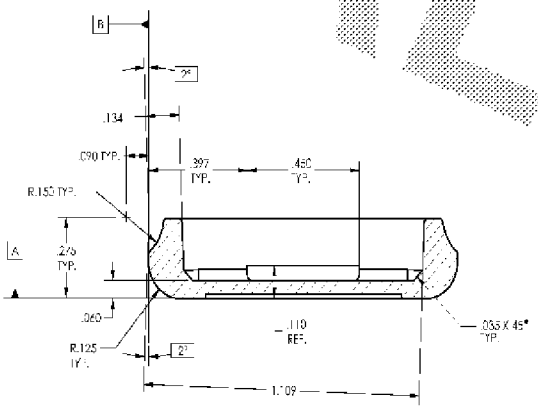

SECTION B-B
SCALE: 4X

Subject to Protective Order - Williams v. Remington