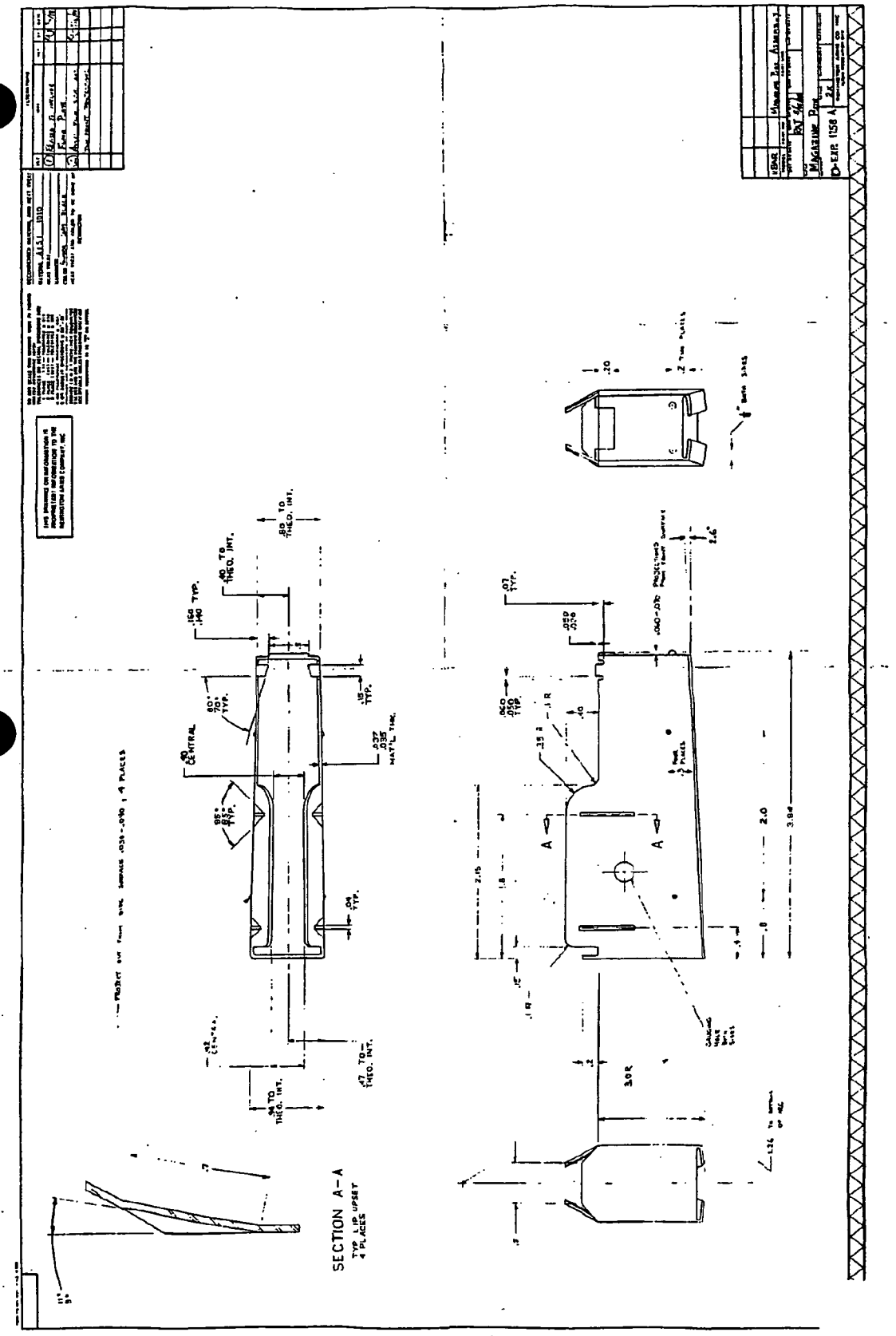
SECTION A-A
TYP. LIP UPSET
4 PLACES
.80 TO THEO. INT.
.40 TO THEO. INT.
.80 CENTRAL
.47 TO THEO. INT.
.36 TO THEO. INT.
.04 TYP.
.15 TYP.
.027 .035 MAT'L THK.
2.15
1.8
2.0
3.84
3.0R
.07 TYP.
.020 .030
.060 .070 PROJECTING PAST FACE
.35 R
.10
.1 R
.2
.1
.8
.4
.2 TWO PLACES
.20
.2 TWO PLACES
.4 BOTH SIDES
.2 TWO PLACES
.2 TWO PLACES
A
A
D-EAR 1158 A
2x
Magazine Box
Winchester Arms Company
Pat. Pend.