CONFIDENTIAL-SUBJECT TO PROTECTIVE ORDER
KINZER V. REMINGTON

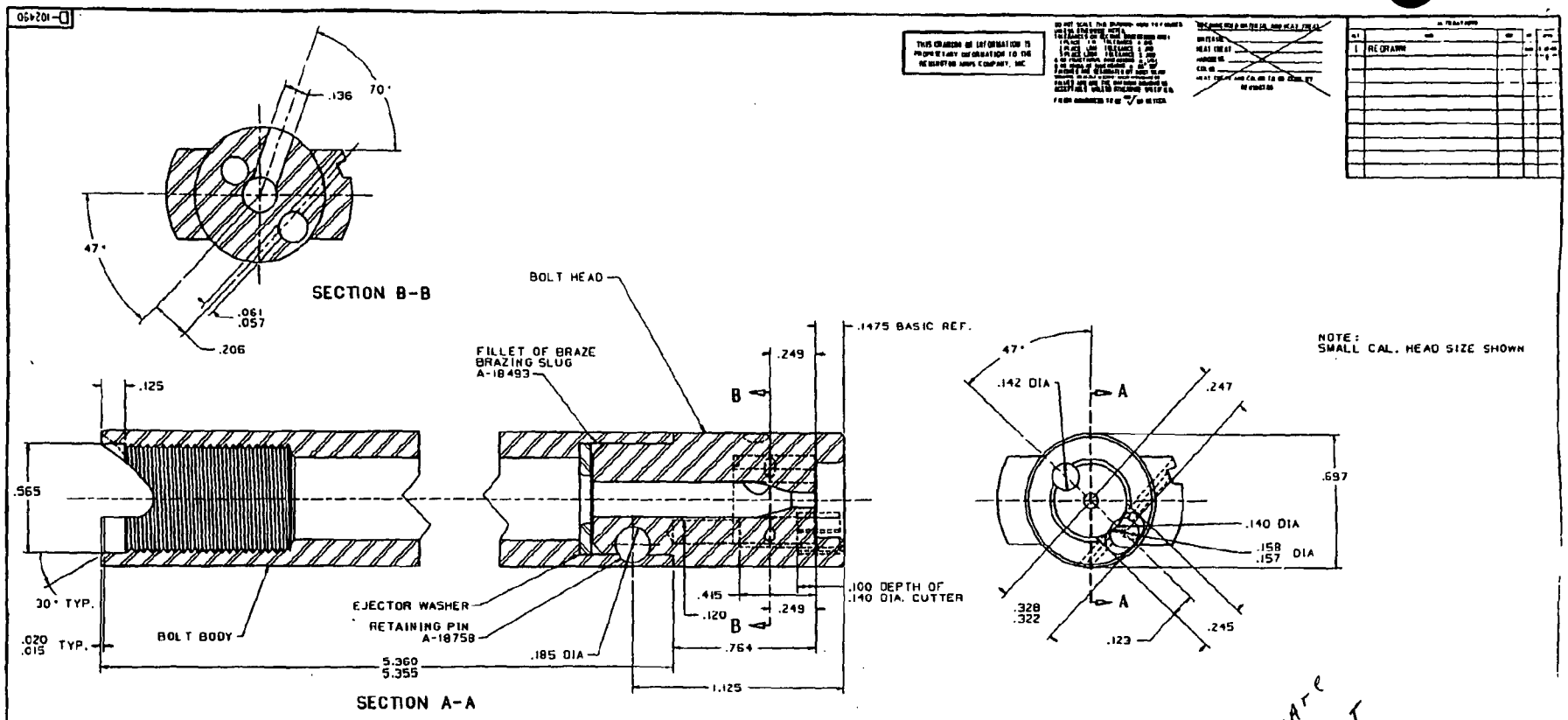


NOTE:
FOR DIMENSIONS NOT SHOWN SEE:
D-28695
C-15851 222 HEAD SIZE
C-15479 STD. HEAD SIZE
C-15706 MAG. HEAD SIZE

Update Long Ext

* DENOTES MAX BOLT HEAD

| BOLT BODY ASSY | | BOLT BODY | BOLT HEAD | WASHER | BOLT BODY BRAZE SLUG |
|---|---|---|---|---|---|
| .30-06<br>.270 WIN.<br>.280 REM. | 102490 | 102505 | 102801<br>*102804 | 17011 | 18493 |
| 7MM<br>300 WIN. MAG. | 102491 | 102505 | 102802<br>*102805 | 17011 | 18493 |

| | | |
|---|---|---|
| 102491 | BOLT BODY ASSY 300 WIN MAG |
| 102491 | BOLT BODY ASSY 7MM |
| 102490 | BOLT BODY ASSY 280 |
| 102490 | BOLT BODY ASSY 270 |
| 102490 | BOLT BODY ASSY 30 06 |

BOLT BODY ASSY
D-102490
REMINGTON ARMS CO INC

R2522431