CONFIDENTIAL-SUBJECT TO PROTECTIVE ORDER
KINZER V. REMINGTON

-C

THIS DRAWING OR INFORMATION IS PROPRIETARY INFORMATION TO THE REMINGTON ARMS COMPANY, INC.

DO NOT SCALE THIS DRAWING: WORK TO FIGURES UNLESS OTHERWISE NOTED.
TOLERANCES ON DECIMAL DIMENSIONS ARE:
1 PLACE (.1) - TOLERANCE ± .010
2 PLACE (.00) - TOLERANCE ± .010
3 PLACE (.000) - TOLERANCE ± .005
& ON FRACTIONAL DIMENSIONS ± 1/64
& ON ANGULAR DIMENSIONS ± 00° 30'
FINISHES ARE DESIGNATED BY POINT MEAN SQUARE (P.M.S.) MICRO-INCH ROUGHNESS VALUES AND ARE THE MAXIMUM ROUGHNESS ACCEPTABLE, UNLESS OTHERWISE SPECIFIED.
FINISH ROUGHNESS TO BE 63 OR BETTER.

RECOMMENDED MATERIAL AND HEAT TREAT
MATERIAL 1010-1020
HEAT TREAT .005 MIN CASE
HARDNESS RCH 88-92
COLOR BLACK OXIDE
HEAT TREAT AND COLOR TO BE DONE BY REMINGTON

ALTERATIONS

ALT	NO	REF.	BY	DATE

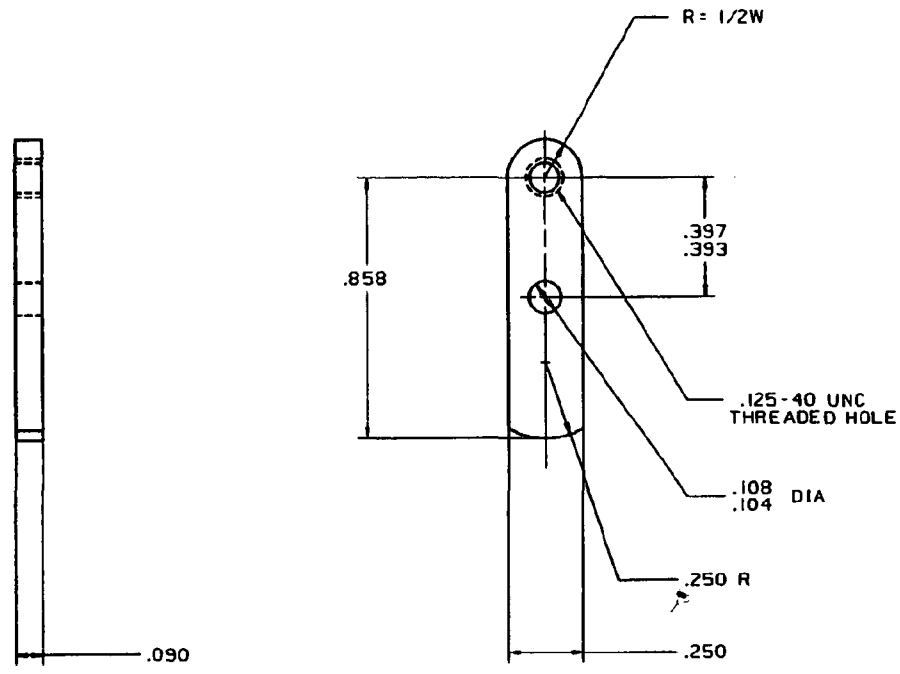

10BAR		MAGAZINE LATCH LEVER
MODEL	PART NO.	PART NAME
DES. BY DATE TO STRIP / DESIGNED	DES. BY DATE DGF 10-7-86	DES. BY DATE / APP. BY DATE
TITLE MAGAZINE LATCH LEVER		
C-1635	SCALE 4X	REMINGTON ARMS CO. INC.

CV FILENAME - REG.10BAR.CXP-1635.MAG-LATCH-LEVER.FHS