C-1437

THIS DRAWING OR INFORMATION IS PROPRIETARY INFORMATION TO THE REMINGTON ARMS COMPANY, INC.

DO NOT SCALE THIS DRAWING. WORK TO FIGURES UNLESS OTHERWISE NOTED.
TOLERANCE ON DECIMAL DIMENSIONS ARE:
1 PLACE .XX - TOLERANCE ± .010
2 PLACE .XXX - TOLERANCE ± .005
3 PLACE .XXXX - TOLERANCE ± .0005
ON FRACTIONAL DIMENSIONS ± 1/64
ON ANGULAR DIMENSIONS ± 00°-30'
FILLETS ARE DESIGNATED BY RADII NEAR DRAWING. U.S.A. MICRO-INCH ROUGHNESS VALUES AND ARE THE MAXIMUM ROUGHNESS ACCEPTABLE, UNLESS OTHERWISE SPECIFIED.

FINISH ROUGHNESS TO BE 63 √ OR BETTER.

RECOMMENDED MATERIAL AND HEAT TREAT

MATERIAL CRS 1010
HEAT TREAT
HARDNESS
COLOR
HEAT TREAT AND COLOR TO BE DONE BY REMINGTON

ALTERATIONS

ALT	NOTE	DEV.	CH	DATE

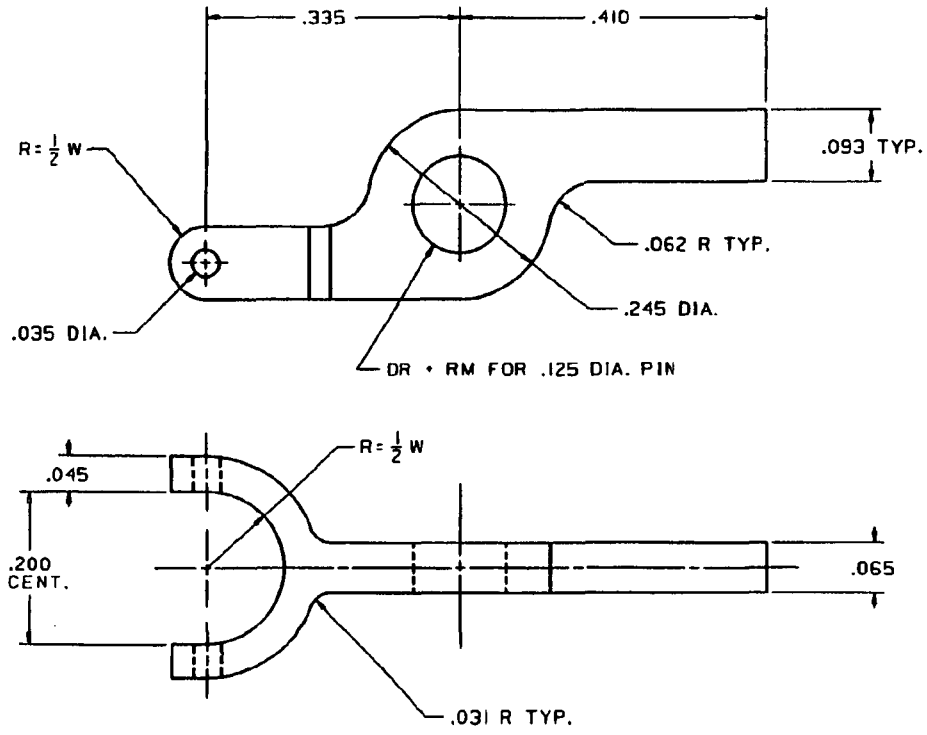

HBAR		TRIGGER AJUSTMENT LEVER
MODEL	PART NO.	PART USE
FEM 5-7-85	LRS 8-19-85	

TITLE TRIGGER AJUSTMENT LEVER

SCALE 10X

REMINGTON ARMS CO. INC.

EXP C-1437

CV FILENAME - RES.BMW.HBAR.TRIG-ADJ-LEVER

R2522814

CONFIDENTIAL-SUBJECT TO PROTECTIVE ORDER
KINZER V. REMINGTON