CONFIDENTIAL-SUBJECT TO PROTECTIVE ORDER
KINZER V. REMINGTON

C-93699

THIS DRAWING OR INFORMATION IS PROPRIETARY INFORMATION TO THE REMINGTON ARMS COMPANY, INC.

DO NOT SCALE THIS DRAWING; WORK TO FIGURES UNLESS OTHERWISE NOTED.
TOLERANCES ON DECIMAL DIMENSIONS ARE:
1 PLACE .X - TOLERANCE ± .010
2 PLACE .XX - TOLERANCE ± .005
3 PLACE .XXX - TOLERANCE ± .002
ON FRACTIONAL DIMENSIONS ± 1/64
ON ANGULAR DIMENSIONS ± 30' - 30'
FILLETS & ARC ESTIMATED BY EDDY BLAN
BREAK SHARP EDGES .015-.005 MAXIMUM
VALUES ARE THE MAXIMUM DIMENSIONS ACCEPTABLE, UNLESS OTHERWISE SPECIFIED.
FINISH DIMENSIONS TO BE 63 OR BETTER.

RECOMMENDED MATERIAL AND HEAT TREAT
MATERIAL C-[illegible]
HEAT TREAT [illegible]
HARDNESS [illegible]
COLOR [illegible]
HEAT TREAT AND COLOR TO BE DONE BY REMINGTON

ALTERATIONS

A.V.	DESC.	REV.	BY	DATE
A	REVISE VIEW PICTORIAL		EJK	6-27-66

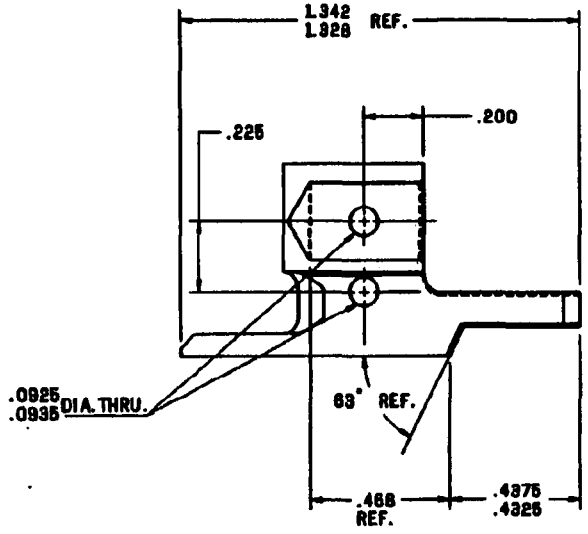

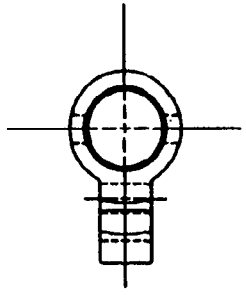

NOTE:
BREAK EDGES .015-.005
FOR BLANK DWG. SEE C-93698

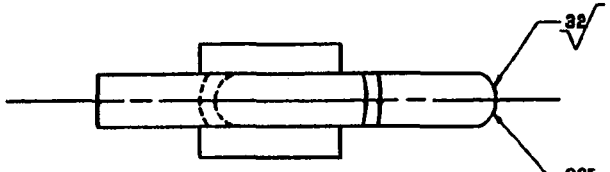

.095
.090 R
CENTRAL WITH .172/.168 DIM.
WITHIN ±.0025

NBAR	93699	FIRING PIN HEAD
MODEL	PART NO.	PART USE

DR. BY DATE F.H.B. 12-18-78 | CH. BY DATE B.J.K. 4-4-66 | CH. BY DATE FEB 3-13-86 | APP. BY DATE

TITLE FIRING PINHEAD

DRAWING C-93699 | SCALE 2X | DRAWING SIZE | REMINGTON ARMS CO. INC.

CV FILENAME - NBR-NBAR-FIRING-PINHEAD