CONFIDENTIAL-SUBJECT TO PROTECTIVE ORDER
KINZER V. REMINGTON

THIS DRAWING OR INFORMATION IS PROPRIETARY INFORMATION TO THE REMINGTON ARMS COMPANY, INC.

DO NOT SCALE THIS DRAWING; WORK TO FIGURES UNLESS OTHERWISE NOTED.
TOLERANCES ON DECIMAL DIMENSIONS ARE:
1 PLACE (.0) - TOLERANCE ± .005
2 PLACE (.00) - TOLERANCE ± .005
3 PLACE (.000) - TOLERANCE ± .005
& DIRECTIONAL DIMENSIONS ± .1/64
& ON ANGULAR DIMENSIONS ± 00°-30'
FINISHES ARE ESTIMATED BY FOOT MEAN DIGRAMS IN MILLI MICRO-INCH DIAGRAMMING TABLES AND ARE THE MAXIMUM ROUGHNESS ACCEPTABLE, UNLESS OTHERWISE SPECIFIED.

FINISH DIAGRAMED TO BE ▽ OR BETTER.

RECOMMENDED MATERIAL AND HEAT TREAT
MATERIAL _____
HEAT TREAT _____
HARDNESS _____
COLOR _____
HEAT TREAT AND COLOR TO BE DONE BY REMINGTON

ALTERATIONS

ALT.		REF.	BY	DATE

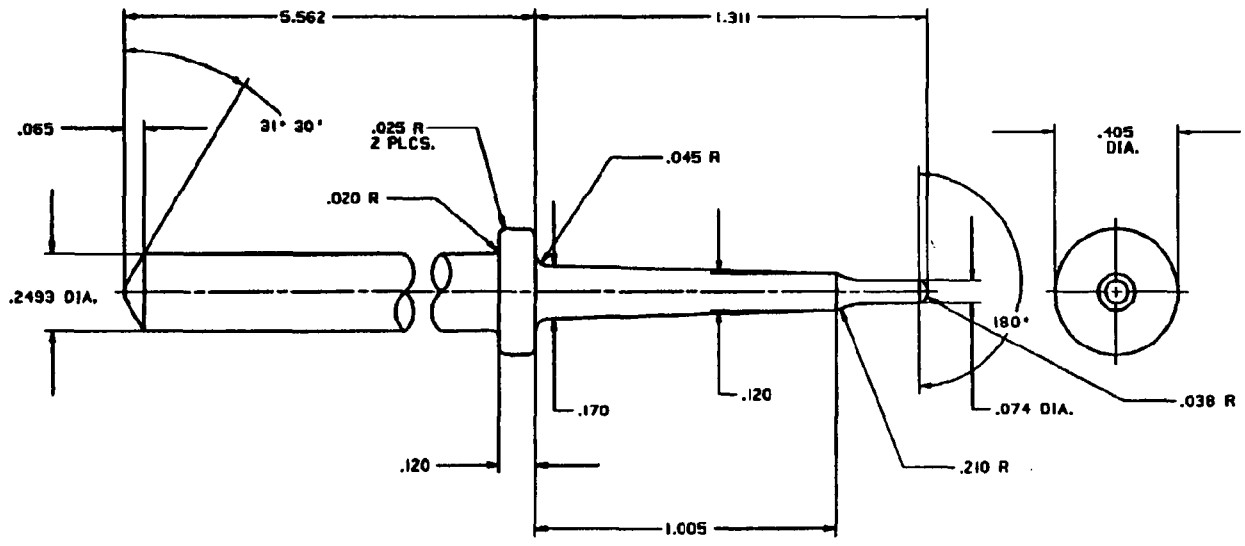

MODEL	PART NO.	PART NAME

DR. BY DATE	CHK. BY DATE	ENG. BY DATE	APP. BY DATE
	MFP 1-29-88		

TITLE FIRING PIN LONG ACTION MIN.

NUMBER	SCALE	SUPERSEDES	SUPERSEDED
C-102520	4X		

REMINGTON ARMS CO. INC.
ELDER RESEARCH DIV.

CV FILENAME - REM MEAN FIRING-PIN-LA-MIN.CAM

CONFIDENTIAL-SUBJECT TO PROTECTIVE ORDER
KINZER V. REMINGTON

THIS DRAWING OR INFORMATION IS PROPRIETARY INFORMATION TO THE REMINGTON ARMS COMPANY, INC.

DO NOT SCALE THIS DRAWING: REFER TO FIGURES UNLESS OTHERWISE NOTED.
TOLERANCES ON DECIMAL DIMENSIONS ARE:
1 PLACE ±.1 - TOLERANCE ± .005
2 PLACE ±.01 - TOLERANCE ± .005
3 PLACE ±.005 - TOLERANCE ± .005
& ON FRACTIONAL DIMENSIONS ± 1/64
& ON ANGULAR DIMENSIONS ± 45' - 30'
FIGURES ARE DESIGNATED BY BOLT HEAD DIAMETER IN ALL 16ths - 16th DIAMETER VALUES AND ARE THE MAXIMUM DIAMETER ACCEPTABLE, UNLESS OTHERWISE SPECIFIED.
FINISH DIAMETERS TO BE 125√ OR BETTER.

RECOMMENDED MATERIAL AND HEAT TREAT
MATERIAL _____
HEAT TREAT _____
HARDNESS _____
COLOR _____
HEAT TREAT AND COLOR TO BE DONE BY REMINGTON

ALTERATIONS

ALT.	ALT.	REV.	BY	DATE

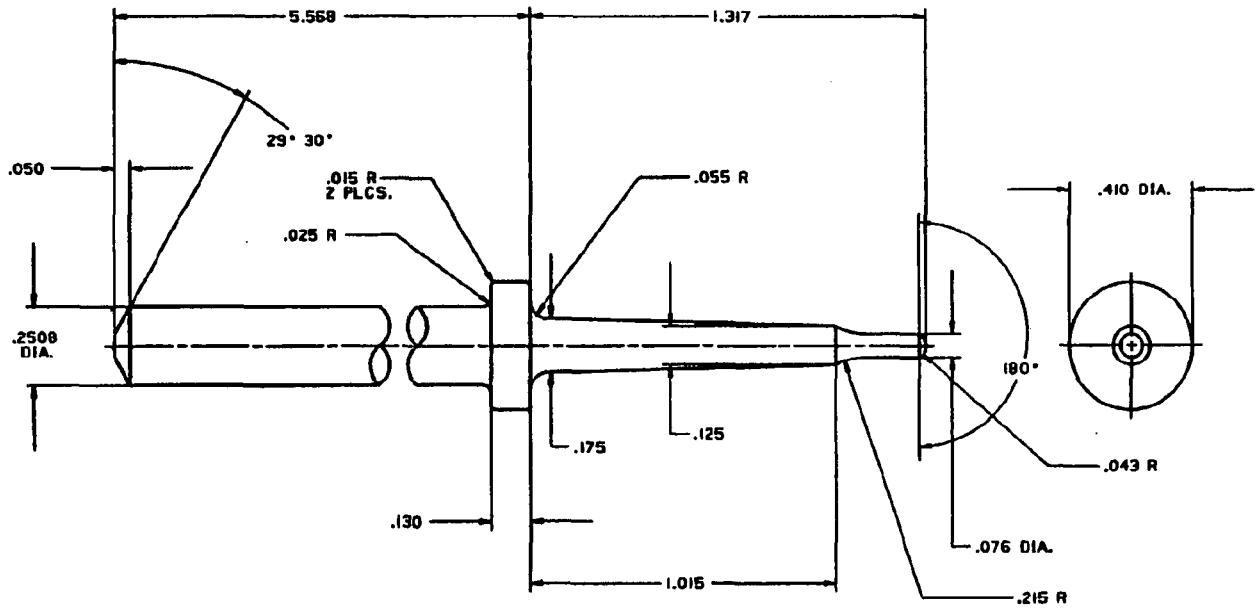

MODEL	PART NO.	PART NAME

DEL. BY DATE: BFP 1-29-68

TITLE: FIRING PIN LONG ACTION MAX.

NUMBER: C-102520

SCALE: 4X

REMINGTON ARMS CO. INC.

CV FILENAME - REM-MAX-FIRING-PIN-LA-MAX.LAK