CONFIDENTIAL-SUBJECT TO PROTECTIVE ORDER
KINZER V. REMINGTON

D-1463

NOTES:

1. ALLOWABLE ECCENTRICITY OF BORE WITH O.D. AT MUZZLE: .005 I .010 INDICATOR READING I.
2. ALIGNMENT OF THREADS MUST BE HELD SO THAT AN INDICATOR READING AT 10" FROM THE MUZZLE, WHEN THE BARREL IS THREADED INTO A ROTATING BUSHING OF ZERO RUNOUT, IS LESS THAN .040 .
3. MAX. OUT OF ROUNDNESS OF CHAMBER .0003
   MAX. ECCENTRICITY OF BORE WITH CHAMBER .001
   MAX. ECCENTRICITY OF THREAD WITH CHAMBER .004
4. SHOULDER MUST BE SQUARE WITH BORE OVER 95% OF BEARING SURFACE WITHIN .0003 .

TABLE I

PART NO.	CALIBER	CHAMBER DWG
	338 WIN MAG	LA-
	7MM REM MAG	LA-167
	300 WIN MAG	LA-506

THIS DRAWING OR INFORMATION IS PROPRIETARY INFORMATION TO THE REMINGTON ARMS COMPANY INC

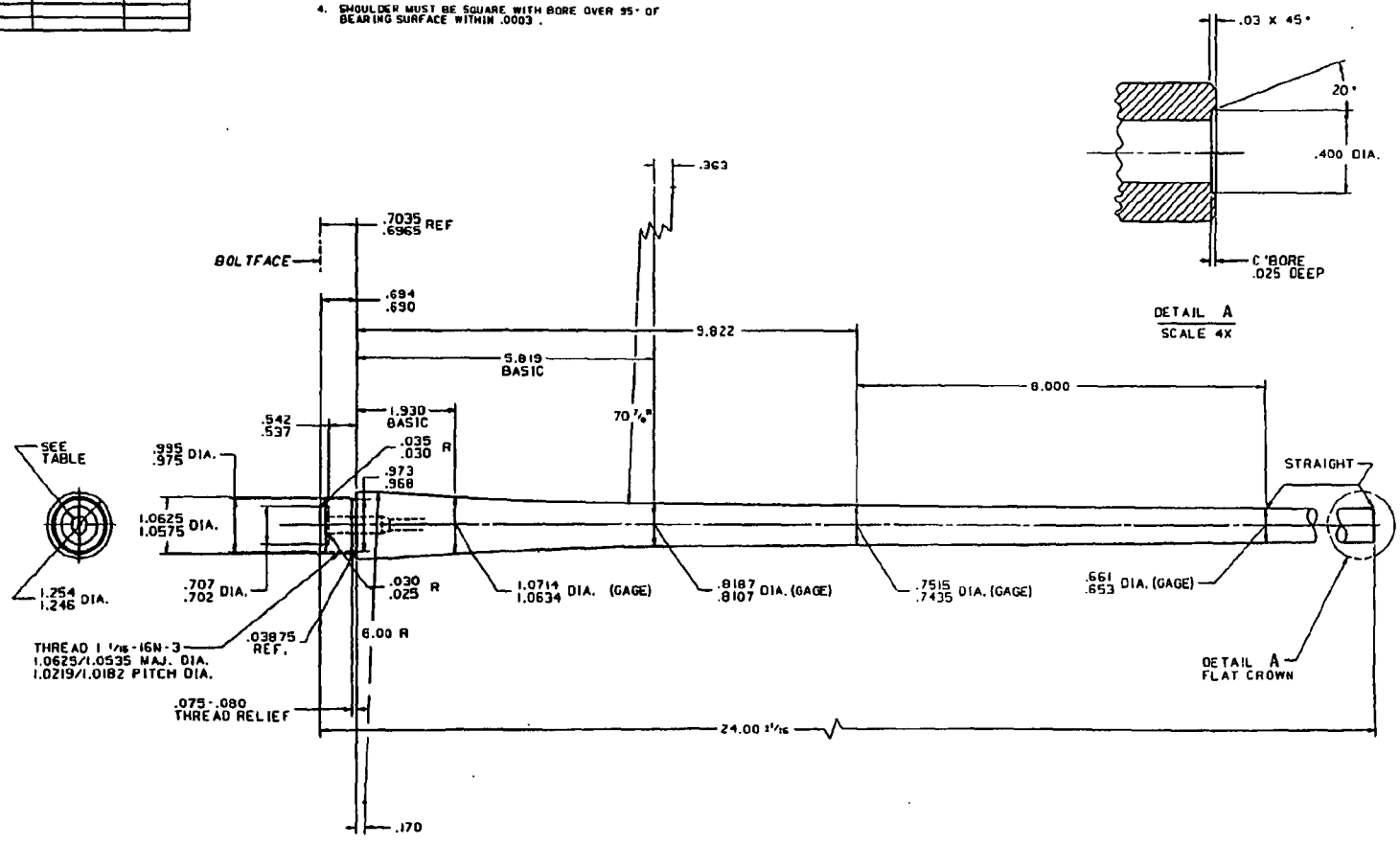

338 WIN MAG
7MM REM MAG
300 WIN MAG

BARREL, MAGNUM

EXP D-1463

FULL

REMINGTON ARMS CO INC