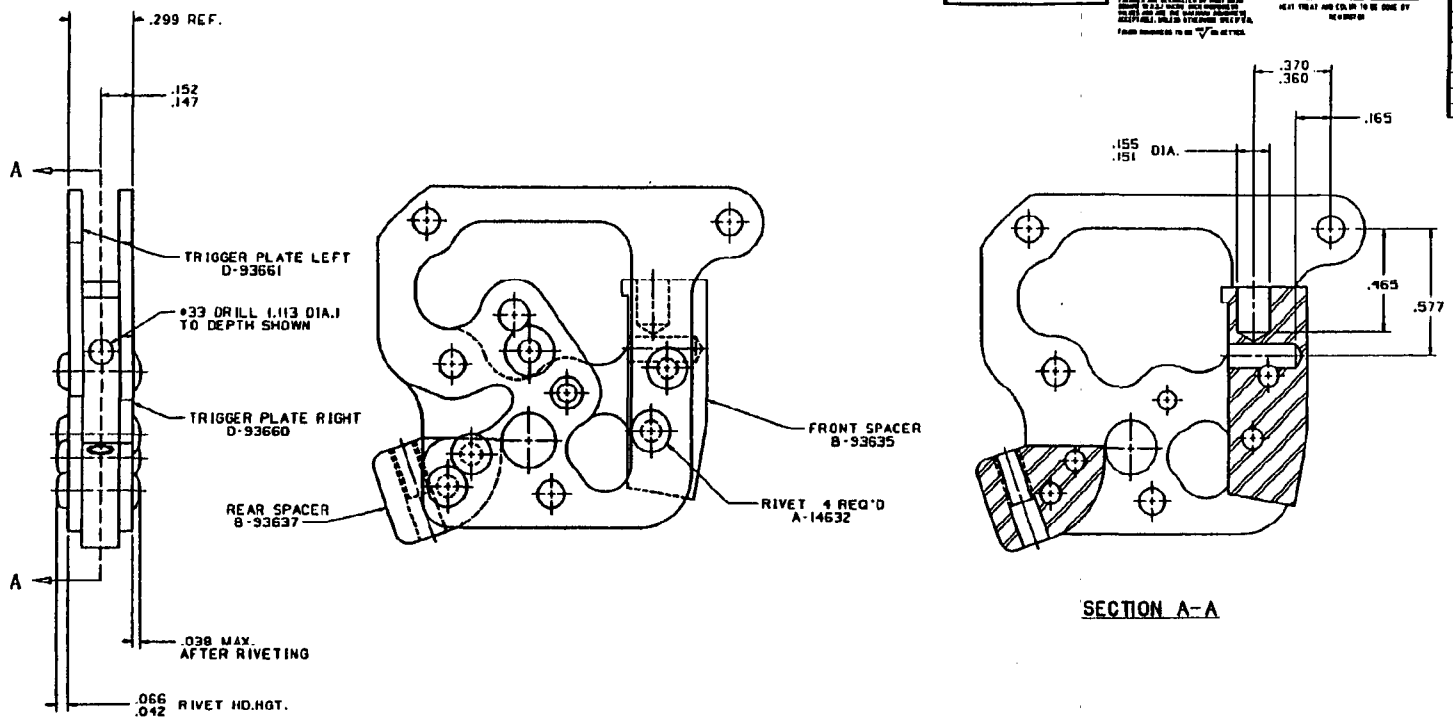

TRIGGER HOUSING ASS'Y.	TRIGGER PLATE RIGHT	TRIGGER PLATE LEFT	FRONT SPACER	REAR SPACER	RIVET (4)
93649	93660	93661	93635	93637	14632

TRIGGER HOUSING ASSEMBLY

D-93649

REMINGTON ARMS CO. INC.

R2523041

CONFIDENTIAL-SUBJECT TO PROTECTIVE ORDER
KINZER V. REMINGTON