NBAR 89

NBAR Critical Path Schedule

Firecontrol

First Design	June 1 89	2 mos.
Prototype (3)	July 1 89	1 mo.
Engineering Evaluation	Sept 1 89	2 mos.
Redesign	Oct. 1 89	1 mo.
Quotation & Economics	Jan. 1 90	3 mos.
Prototype (10)		
- Vendor Parts	July 1 90	6 mos.
Test & Redesign	Aug. 15 90	6 wks.
Build 30 Design Accept.	May 15 91	9 mos.
and Trial and Pilot		
T & P Testing	July 15 91	2 mos.
Redesign and Reprocess	Jan. 15 91	6 mos.
Produce to Warehouse	4 Q 91	
Introduce to Trade	January 1992	

This is a list of the NBAR features, (that represent our design goals), in order of priority.

o Detachable Magazine Box

o Improved Firecontrol
- No Connector
- Two Trigger Pull Springs (low spring rate)
- "Sealed Firecontrol"
- Balanced Trigger
- Trigger and Sear Block
- Not Retrofittable to M/700

o Bolt Lock w/override

o Integral Scope Mounts

o New Extractor

o New "Custom Shop" Barrel Contour
-Mountain Rifle Crown

o Improved Bedding System

o M/700 receiver, cosmetically altered

o New Wood Stock

CONFIDENTIAL-SUBJECT TO PROTECTIVE ORDER
KINZER V. REMINGTON

NBAR Critical Path Schedule

Firecontrol

First Design	Mar. 1 89	2 mos.
Prototype (3)	Apr. 1 89	1 mo.
Engineering Evaluation	June 1 89	2 mos.
Redesign	July 1 89	1 mo.
Quotation & Economics	Oct. 1 89	3 mos.
Prototype (10)		
- Vendor Parts	Apr. 1 90	6 mos.
Test & Redesign	May 15 90	6 wks.
Build 30 Design Accept.	Feb. 15 91	9 mos.
and Trial and Pilot		
T & P Testing	Apr. 15 91	2 mos.
Redesign and Reprocess	Oct. 15 91	6 mos.
Produce to Warehouse	4 Q 91	
Introduce to Trade	January 1992	

This is a list of the NBAR features, (that represent our design goals), in order of priority.

- o Detachable Magazine Box
- o Improved Firecontrol
  - No Connector
  - Two Trigger Pull Springs (low spring rate)
  - "Sealed Firecontrol"
  - Balanced Trigger
  - Trigger and Sear Block
  - Not Retrofittable to M/700
- o Bolt Lock w/override
- o Integral Scope Mounts
- o New Extractor
- o New "Custom Shop" Barrel Contour
  - -Mountain Rifle Crown
- o Improved Bedding System
- o M/700 receiver, cosmetically altered
- o New Wood Stock

CONFIDENTIAL-SUBJECT TO PROTECTIVE ORDER
KINZER V. REMINGTON

Revised
3/13/89
TCD

Product Redesign Criteria

Clip Detachable Rifle (CDL)

Revised 3/29/89

Metalwork

- o Detachable Magazine Box
- o Two Position Safety
- o Bolt Lock w/override
- o New Extractor
- o BDL Barrel Contour
- o M/700 receiver
- o BDL Open Sights

Woodwork

- o 30 Gloss Finish
- o New Butt Pad
- o No White Line Spacers

RSM/TGB
3-29-89

CONFIDENTIAL-SUBJECT TO PROTECTIVE ORDER
KINZER V. REMINGTON

Product Redesign Criteria

New Bolt Action Rifle (NBAR)

Revised 3/14/89

Metalwork

- o Detachable Magazine Box
- o Improved Firecontrol
  - No Connector
  - Two Trigger Pull Springs (low spring rate)
  - "Sealed Firecontrol"
  - Balanced Trigger
  - Trigger and Sear Block
  - Not Retrofittable to M/700
- o Bolt Lock w/override
- o Integral Scope Mounts
- o New Extractor
- o New "Custom Shop" Barrel Contour
  - -Mountain Rifle Crown
- o M/700 receiver, cosmetically altered

Woodwork

- o Improved Bedding System
- o New Wood Stock

RSM/TGB
3-14-89

CONFIDENTIAL-SUBJECT TO PROTECTIVE ORDER
KINZER V. REMINGTON

This is a list of the NBAR features, (that represent our design goals), in order of priority.

- o Detachable Magazine Box
- o Improved Firecontrol
  - No Connector
  - Two Trigger Pull Springs (low spring rate)
  - "Sealed Firecontrol"
  - Balanced Trigger
  - Trigger and Sear Block
  - Not Retrofittable to M/700
- o Bolt Lock w/override
- o Integral Scope Mounts
- o New Extractor
- o New "Custom Shop" Barrel Contour
  - -Mountain Rifle Crown
- o Improved Bedding System
- o M/700 receiver, cosmetically altered
- o New Wood Stock

3-14-89
RSM/TGB

== LIST == 12- 9-88 13:35:19 FUTIL 10.27

FILENAME	DATE	TIME
RES.NBAR.TRIGGER-GUARD.TJP.&PD	10-27-88	14:03:59
RES.NBAR.BBL-NEW-CONTOUR.RAW.&PD	8-22-88	13:18:20
RES.NBAR.BBL-NEW-CONTOUR-MAG.RAW.&PD	8-22-88	13:35:57
RES.NBAR.BOLT-ASSY.TJP.&PD	10- 1-87	10:30:11
RES.NBAR.BOLT-HEAD.&PD	6-11-86	17:52:09
RES.NBAR.BOLT-LOCK.RAW.&PD	3-28-88	21:32:45
RES.NBAR.FIRCTRL-PLATE-LFT.&PD	2-25-87	20:09:57
RES.NBAR.FIRCTRL-PLATE-RT.&PD	1- 5-88	18:56:10
RES.NBAR.FIRING-PIN-ASSY-LA.&PD	3-14-86	7:10:34
RES.NBAR.FRONT-SPACER.&PD	2-25-87	16:35:03
RES.NBAR.GUARD-SCREW.&PD	7-16-86	9:37:22
RES.NBAR.REAR-GUARD-SCREW.&PD	7-22-86	15:02:13
RES.NBAR.REAR-SPACER.&PD	11-29-87	9:44:54
RES.NBAR.FIRING-PINHEAD.&PD	1-29-88	8:03:43
RES.NBAR.RECEIVER.&PD	11-29-87	9:53:59
RES.NBAR.SAFETY-ASSY.&PD	2-26-87	20:29:52
RES.NBAR.SAFETY-PIVOT-PIN.&PD	12-21-87	16:47:41

RES.NBAR.TRIGGER-GUARD.TJP.&PD	10-27-88	14:03:59
RES.NBAR.BBL-NEW-CONTOUR.RAW.&PD	8-22-88	13:18:20
RES.NBAR.BBL-NEW-CONTOUR-MAG.RAW.&PD	8-22-88	13:35:57
RES.NBAR.BOLT-ASSY.TJP.&PD	10- 1-87	10:30:11
RES.NBAR.BOLT-HEAD.&PD	6-11-86	17:52:09
RES.NBAR.BOLT-LOCK.RAW.&PD	3-28-88	21:32:45
RES.NBAR.FIRCTRL-PLATE-LFT.&PD	2-25-87	20:09:57
RES.NBAR.FIRCTRL-PLATE-RT.&PD	1- 5-88	18:56:10
RES.NBAR.FIRING-PIN-ASSY-LA.&PD	3-14-86	7:10:34
RES.NBAR.FRONT-SPACER.&PD	2-25-87	16:35:03
RES.NBAR.GUARD-SCREW.&PD	7-16-86	9:37:22
RES.NBAR.REAR-GUARD-SCREW.&PD	7-22-86	15:02:13
RES.NBAR.REAR-SPACER.&PD	11-29-87	9:44:54
RES.NBAR.FIRING-PINHEAD.&PD	1-29-88	8:03:43
RES.NBAR.RECEIVER.&PD	11-29-87	9:53:59
RES.NBAR.SAFETY-ASSY.&PD	2-26-87	20:29:52
RES.NBAR.SAFETY-PIVOT-PIN.&PD	12-21-87	16:47:41
RES.NBAR.SEAR-SAFETY-CAM.&PD	1- 4-88	17:26:42
RES.NBAR.STOCK.&PD	3-10-87	16:10:49
RES.NBAR.STOCK-INSERT.&PD	10- 8-86	16:09:23
RES.NBAR.TRIGGER-ASSY.&PD	5- 6-88	22:04:45
RES.NBAR.TRIGGER-BLK-PLUNGER.&PD	2-25-87	16:08:33
→ RES.NBAR.TRIGGER-HOUSING-ASSY.&PD	11-29-87	10:10:09 → OLD.&PD

1>

OLD HOUSI

```
RES.NBAR.TRIGGER-GUARD.TJP.&PD          10-27-88 14:03:59
RES.NBAR.BBL-NEW-CONTOUR.RAW.&PD         8-22-88 13:18:20
RES.NBAR.BBL-NEW-CONTOUR-MAG.RAW.&PD     8-22-88 13:35:57
RES.NBAR.BOLT-ASSY.TJP.&PD              10- 1-87 10:30:11
RES.NBAR.BOLT-HEAD.&PD                   6-11-86 17:52:09
RES.NBAR.BOLT-LOCK.RAW.&PD               3-28-88 21:32:45
RES.NBAR.FIRCTRL-PLATE-LFT.&PD           2-25-87 20:09:57
RES.NBAR.FIRCTRL-PLATE-RT.&PD            1- 5-88 18:56:10
RES.NBAR.FIRING-PIN-ASSY-LA.&PD          3-14-86  7:10:34
RES.NBAR.FRONT-SPACER.&PD                2-25-87 16:35:03
RES.NBAR.GUARD-SCREW.&PD                 7-16-86  9:37:22
RES.NBAR.REAR-GUARD-SCREW.&PD            7-22-86 15:02:13
RES.NBAR.REAR-SPACER.&PD                11-29-87  9:44:54
RES.NBAR.FIRING-PINHEAD.&PD              1-29-88  8:03:43
RES.NBAR.RECEIVER.&PD                   11-29-87  9:53:59
RES.NBAR.SAFETY-ASSY.&PD                 2-26-87 20:29:52
RES.NBAR.SAFETY-PIVOT-PIN.&PD           12-21-87 16:47:41
RES.NBAR.SEAR-SAFETY-CAM.&PD             1- 4-88 17:26:42
RES.NBAR.STOCK.&PD                       3-10-87 16:10:49
RES.NBAR.STOCK-INSERT.&PD               10- 8-86 16:09:23
RES.NBAR.TRIGGER-ASSY.&PD                5- 6-88 22:04:45
RES.NBAR.TRIGGER-BLK-PLUNGER.&PD         2-25-87 16:08:33
RES.NBAR.TRIGGER-HOUSING-ASSY.&PD       11-29-87 10:10:09
1>
```

RE3.700.E33225.35. RECEIVER-LA-RH.DSF.&PD

BECOMES 700.&AJ

Views 1, 2, 4, 21, 3, 5, 6, 32, 51, 52

Monthly And Quarterly Reports
1984

DUPONT RECORDS CONTROL SCHEDULE

RECORDS CATEGORY OR TITLE: R+D Periodic Reports

COPY "O" (OFFICIAL) ☐ "X" (EXTRA) ☒

TOTAL RETENTION: 10 Years

GS-11050 Rev. 8/76

G-88

DON'T SAY IT—*WRITE IT*

To _____

From _____

- Research Quarterly Report (Due the last Frid
  - March
  - June
  - September (30th)
  - December (30th)

- Research Highlight Report (Due the last Friday of month in Bridgeport)
  - January
  - February
  - April
  - May
  - July
  - August
  - October (28th)
  - November (25th)

Note:
The New Products Report should be in Jim Martin's Office the preceding Friday.

"YOUR S. "

CONFIDENTIAL-SUBJECT TO PROTECTIVE ORDER
KINZER V. REMINGTON

RD-41-B

REMINGTON ARMS COMPANY, INC.

INTER-DEPARTMENTAL CORRESPONDENCE

Remington DUPONT PETERS DUPONT

"CONFINE YOUR LETTER TO ONE SUBJECT ONLY" December 17, 1984

TO: J.W. Bower

FROM: R.S. Murphy RSM

Quarterly Report - December, 1984

HIGHLIGHTS

- Due to delays in receiving prototype parts from the Model Shop, NBAR design evaluation will not begin until early January.
- The Custom Shop is building .350 Rem. Mag. rifles for test; evaluation and transmittal will follow.
- Research support to Process Engineering regarding the Mountain Rifle is continuing.

New Bolt Action Rifle

A new bolt action rifle is being developed as a potential replacement for the Model 700, possibly in 1988. Technical improvements over the Model 700 include enhanced safety, a detachable magazine, a claw-type extractor, an independent bolt lock, and integral scope mounts.

The design evaluation scheduled for December has been delayed until January due to difficulties in scheduling prototype parts through the Model Shop. Components yet to be delivered include long action bolts, short action stocks, trigger guards, magazine boxes, followers, and triggers. The delay of the bolts is critical to the start of testing since after receipt from the Model Shop they must be processed through production before final heading of the barreled actions can be started. Of the remaining components, all but the magazine assemblies should be completed before final heading of the barrels. The trigger guard and follower are being processed through the N/C Shop and I cannot estimate a realistic completion date.

Five rifles have been readied for Focus Panel reviews of several cosmetic features including receiver, bolt handle, bolt plug, and stock styling. Marketing is scheduling the reviews that may start as early as January, 85.

Model 700 Classic - .350 Rem. Mag.

Remington is continuing the limited run, special caliber offering in the Classic line by reintroducing the .350 Rem. Mag. in 1985.

Research involvement is limited to strength, accuracy, and feeding testing as well as the transmittal of model drawings. The Custom Shop is assembling the rifles and a test outline has been written in anticipation of their receipt.

Mountain Rifle

Scheduled for a 1986 introduction, the Mountain Rifle will address the higher end of the bolt action rifle line and replace the Model 700 Classic.

N/C Shop fabrication of the stock former is continuing at an unacceptable pace and will probably interfere with the trial and pilot schedule.

RSM:sps

CONFIDENTIAL-SUBJECT TO PROTECTIVE ORDER
KINZER V. REMINGTON

ILY"

November 13, 1984

ONTHLY REPORT

R.S. Murphy/F.E. Martin

arding prototype components is
and I expect to have test rifles
problem areas have been identified
:ock. Preliminary testing can
e if it is not complete. Concern-
l be started in the Model Shop,
outside contractor.

.ce for testing extractors is
be written.

safety and fire control is
r 13, at 1:00 p.m.

e reviewed with J.R. Snedeker
er 16.

ined in anticipation of the

F.H. Smith

luction is continuing. The
completion date for the stock
will be transmitted by the
last of the loose ends.
inletting have come up and

F.H. Smith

nbled and will be processed
ing. Strength, accuracy,
ould be complete approxi-
.ies barrels. The test
lovember 23.

CONFIDENTIAL-SUBJECT TO PROTECTIVE ORDER
KINZER V. REMINGTON

RD-69-B

REMINGTON ARMS COMPANY, INC.

INTER-DEPARTMENTAL CORRESPONDENCE

Remington DUPONT PETERS DUPONT

"CONFINE YOUR LETTER TO ONE SUBJECT ONLY"

October 22, 1984

TO: J.W. Bower

FROM: R.S. Murphy

RE: October Monthly Report

700 Mountain Rifle

Research assistance to Production is continuing and a transmittal involving changes to the stock, grip cap, fore-end tip and receiver plug drawings is complete. N/C work is underway on the stock former. (The importance of this work must be stressed with Bob Sanzo.)

Research has yet to develop a final grip checkering pattern. This will be scheduled.

NBAR F.E. Martin - R.S. Murphy

A total part drawing package is five (5) drawings short of being complete and these will be done by Wednesday, October 24. All components will be in the Model Shop also by Wednesday. Prototype samples for test are expected by December 1.

Investigation of tolerance stack-ups as well as outlining future testing will begin this week.

RSM:sps

CONFIDENTIAL-SUBJECT TO PROTECTIVE ORDER
KINZER V. REMINGTON

REMINGTON ARMS COMPANY, INC.

INTER-DEPARTMENTAL CORRESPONDENCE

Remington PETERS

"CONFINE YOUR LETTER TO ONE SUBJECT ONLY"

September 11, 1984

TO: J.W. Bower

FROM: R.S. Murphy RSM

RE: Quarterly Report - September, 1984

HIGHLIGHTS

- The 700 Mountain Rifle economics have been approved and Process Engineering work is underway.
- Transmittal of the Sportsman 78 short action calibers is complete.
- The Ducks Unlimited Model 700 Dinner Rifle transmittal is complete.
- New Bolt Action drawing, C.V., and prototype fabrication work is continuing.

Model 700 Mountain Rifle

Scheduled for a 1986 introduction, the Mountain Rifle will address the higher end of the bolt action rifle line and replace the Model 700 Classic. Project economics have finally been approved and a Process Engineering master schedule has been developed.

The N/C Shop fabrication of the stock former is continuing in an effort to meet the Process Engineering schedule.

Sportsman 78 - R.S. Murphy

With the addition of the 308 and 243 short action calibers planned for 1985, the Sportsman 78 will offer a more complete line to the cost conscious shooter. Since these calibers already exist in the present 700 line, our total Research commitment will be limited to the transmittal and a limited trial and pilot evaluation. The drawings and

CONFIDENTIAL-SUBJECT TO PROTECTIVE ORDER
KINZER V. REMINGTON

Sportsman 78 - cont'd.

parts list transmittal is complete and the remaining evaluation will be scheduled.

Model 700 Ducks Unlimited - R.S. Murphy

For the first time in 1985, Remington will produce a special, limited production Ducks Unlimited Dinner Rifle. Since the variation from a standard Model 700 entails only cosmetic changes, the total Research commitment will be limited to the transmittal and the trial and pilot evaluation. The transmittal is complete and the evaluation will be scheduled.

New Bolt Action Rifle - R.S. Murphy, F.E. Martin

A new bolt action rifle is being developed as a potential replacement for the Model 700, possibly in 1988. A "preferred" design has been selected by Marketing and Research, and work on the drawing package is continuing. A limited number of engineering test prototypes are also being built for evaluation in December. Computervision modeling of individual components is being done on a "safety critical" priority basis.

RSM:sps

CONFIDENTIAL-SUBJECT TO PROTECTIVE ORDER
KINZER V. REMINGTON

RD-49-8

REMINGTON ARMS COMPANY, INC.

INTER-DEPARTMENTAL CORRESPONDENCE

Remington DUPONT PETERS DUPONT

"CONFINE YOUR LETTER TO ONE SUBJECT ONLY"

August 14, 1984

To: J. W. Bower

From: R. S. Murphy RSM

Subject: Monthly Report - August

New Product Development - Rifles (R. S. Murphy)

Model 700 Mountain Rifle (F. E. Martin)

The N/C Shop has received the tool drawing from PE&C and work on the stock former is being scheduled.

New Bolt Action Rifle (F. E. Martin, K. L. Calkins, R. A. Jones)

Design efforts on the NBA are continuing in several areas of product development.

An alternate side tang bolt lock design is nearing completion and only requires detailed drawings. Feedback regarding the legal implications of this design is expected from Marketing.

Three-dimensional modeling of critical components on the C.V. System has been started. The complete rifle is expected to be on the system before transmittal.

Final Research cost estimating of the preferred design is continuing and should be complete the week of August 27.

Several components are in the Model Shop for the fabrication of engineering test prototypes.

Marketing has forwarded initial caliber volume and pricing estimates, however, magazine box and bolt handle styling questions still remain.

RSM:ws

CONFIDENTIAL-SUBJECT TO PROTECTIVE ORDER
KINZER V. REMINGTON

MONTHLY REPORTS

11-18-87

NBAR STATUS

- ACCURACY TESTING UNDERWAY ON 22 m/78 30-06
  → with exception of control guns, these will be sent to D.C. Brennan Firearms for barrel modification — then returned to Remington for evaluation of proposed new technology
- Vendor has sent us a 1st prototype trigger guard
  → we have approved this and have 99 more due by 12-16-87.
- Magazine box vendor is to begin work on tooling next wk. with delivery of 50 prototypes 2-1-87.
- Waiting for stocks and bedding blocks from model shop
  → need these to proceed w/ testing for accuracy
- Various small parts such as mag. follower and mag. latch housing prototypes due from model shop (N.C.) by 1-1-88
- 10 - BARREL ACTION ASSEMBLE POLISH & COLOR READY FOR ASSY
  FIRE CONTROLS LESS SAFETY ASSY & BOLT LOCK READY
- SAFETY ASSY & BOLT LOCKS NOT COMPLETED
  ALT. MANU. METHOD - STAMPING VENDOR - QUOTING EXPECT REPLY 11-20-87

CONFIDENTIAL-SUBJECT TO PROTECTIVE ORDER
KINZER V. REMINGTON

July 1, 1993

TO: Ken Soucy
FROM: Jim Ronkainen

SUBJECT: June Monthly Report

M/700 DM

Design acceptance (DA) testing of the M/700 DM started and stopped on June 7 due to feeding difficulties with the magazine. Based on the early test results, the magazine box was moved higher inside the receiver to increase the "interference" of the bolt with the head of the round feeding from the magazine. The increased "interference" cut the malfunction rate from approximately 60% to 0% on the guns that were tested. The design for the boxes and receiver have been modified to reflect the higher position of the shell inside the receiver. The early DA testing also revealed that loading a full magazine of magnum cartridges into a rifle with a closed action was extremely difficult. Modification of the magazine follower relieved this difficulty.

Tooling and components for Trial and Pilot (T&P) are underway. The diecasting mold for the long action trigger guards has been successfully run at the vendor. Trigger guards will be available for T&P and catalog samples. The first investment cast samples of the latches and the long action followers have been received and inspected. Investment cast parts are on schedule for T&P. Trial molding runs from the MIM tooling have been run and downstream process development has begun. The first 100 long action BDL stocks from S&K have been run and are now in Ilion. Magnum BDL stocks will be available in mid to late July. Modifications to the long action magazine spring tooling have delayed delivery of parts from mid-June until mid-July. Samples of magazine boxes made to the new design will be available in mid-August for initial T&P testing. Final production tooling for the boxes will be available in mid-September. Changes to the receiver will be done on the Fadal machining center until new cams are available for the Tri-ordinate machines.

Design acceptance testing will begin on a small scale during plant shutdown and resume in earnest after shutdown. As many pre-production and production parts as possible will be included in the DA testing.

M/700 Synthetic Stock

The new synthetic long stock mold was run off from 6/22-24. The first samples look very good and are currently in test in the R&D Test Lab. A softer material for the recoil pad was also run at the same time as the stock mold with promising results.

M/700 Classic for 1994 - 6.5 x 55 Swedish

The drawing package and parts list for the 6.5 x 55 Swedish were transmitted in early June. The chamber for the cartridge meets the new SAAMI specifications for this cartridge (translation of the CIP drawing to English units).

CONFIDENTIAL-SUBJECT TO PROTECTIVE ORDER
KINZER V. REMINGTON

June 4, 1993

TO: Ken Soucy
FROM: Jim Ronkainen

SUBJECT: May Monthly Report

M/700 DM
The first long action trigger guards were received from the R&D NC shop this week. These guards are powder coated and will begin design acceptance testing today. The final drawings for the machined trigger guards are being transmitted today. Tooling for the trigger guard castings is on schedule for a July Trial & Pilot (T&P). Fixturing for the secondary machining is a critical path item for July T&P. Alternate methods for the secondary machining are being investigated to keep the T&P on schedule.

The long action boxes for the design acceptance test have passed inspection. The short action sample is in process at the vendor and is expected in one week. The design of the latch retaining tab has been resolved and was transmitted to the vendor on May 27. Work on tooling for the boxes will commence immediately. Product Team decided all trigger guards and magazine boxes would be powder coated to guarantee a good color match between the magazine box and the trigger guard. It should be noted that powder coating the floorplate will make the future addition of artwork difficult due to the tendency of the powdercoat to fill and cover any surface imperfections, including intentional marking or engraving.

The first stocks inlet for the M/700 DM at S&K were received last week. A cursory check of the stocks here showed a mismatch in the depths of the latch relief cuts, but Maurice Monteau felt this would be an easy item to correct. All other inletting appeared to be good. Maurice will visit S&K next week and run corrected samples for finishing if time permits.

Sample waxes and parts for the magazine latches have been received from the investment casting vendor. Three separate samples of waxes for the long action magazine follower have been received from the vendor. The first two samples contained errors that were corrected in the third and final version of the wax. Approximately 50 investment cast samples of each component are expected here early next week for our evaluation. Design and build of tooling for the secondary machining of the investment cast parts is underway. I visited the mold vendor for the MIM latches to approve the checkering electrodes for the die. The molds for the latches and the short magazine followers are expected the second week in June. Latches for design acceptance testing are being made in the tool room.

Design acceptance testing starts today.

M/700 SS for 1993
Trial and pilot testing was successfully completed.

M/700 Synthetic Stock
The drawing package for the Remington made synthetic stock was transmitted in May. Mold run off is still scheduled for 6/14.

CONFIDENTIAL-SUBJECT TO PROTECTIVE ORDER
KINZER V. REMINGTON

July 1, 1993

TO: Ken Soucy
FROM: Jim Ronkainen

SUBJECT: **June Monthly Report**

M/700 DM

Design acceptance (DA) testing of the M/700 DM started and stopped on June 7 due to feeding difficulties with the magazine. Based on the early test results, the magazine box was moved higher inside the receiver to increase the "interference" of the bolt with the head of the round feeding from the magazine. The increased "interference" cut the malfunction rate from approximately 60% to 0% on the guns that were tested. The design for the boxes and receiver have been modified to reflect the higher position of the shell inside the receiver. The early DA testing also revealed that loading a full magazine of magnum cartridges into a rifle with a closed action was extremely difficult. Modification of the magazine follower relieved this difficulty.

Tooling and components for Trial and Pilot (T&P) are underway. The diecasting mold for the long action trigger guards has been successfully run at the vendor. Trigger guards will be available for T&P and catalog samples. The first investment cast samples of the latches and the long action followers have been received and inspected. Investment cast parts are on schedule for T&P. Trial molding runs from the MIM tooling have been run and downstream process development has begun. The first 100 long action BDL stocks from S&K have been run and are now in Ilion. Magnum BDL stocks will be available in mid to late July. Modifications to the long action magazine spring tooling have delayed delivery of parts from mid-June until mid-July. Samples of magazine boxes made to the new design will be available in mid-August for initial T&P testing. Final production tooling for the boxes will be available in mid-September. Changes to the receiver will be done on the Fadal machining center until new cams are available for the Tri-ordinate machines.

Design acceptance testing will begin on a small scale during plant shutdown and resume in earnest after shutdown. As many pre-production and production parts as possible will be included in the DA testing.

M/700 Synthetic Stock

The new synthetic long stock mold was run off from 6/22-24. The first samples look very good and are currently in test in the R&D Test Lab. A softer material for the recoil pad was also run at the same time as the stock mold with promising results.

M/700 Classic for 1994 - 6.5 x 55 Swedish

The drawing package and parts list for the 6.5 x 55 Swedish were transmitted in early June. The chamber for the cartridge meets the new SAAMI specifications for this cartridge (translation of the CIP drawing to English units).

CONFIDENTIAL-SUBJECT TO PROTECTIVE ORDER
KINZER V. REMINGTON

M/700 Classic for 1994 - 6.5 x 55 Swedish Mauser

Work on this project has been delayed by my work on the M/700 DM project. Transmittal of the drawing package will take place next week.

CONFIDENTIAL-SUBJECT TO PROTECTIVE ORDER
KINZER V. REMINGTON

June 4, 1993

TO: Ken Soucy
FROM: Jim Ronkainen

SUBJECT: May Monthly Report

M/700 DM
The first long action trigger guards were received from the R&D NC shop this week. These guards are powder coated and will begin design acceptance testing today. The final drawings for the machined trigger guards are being transmitted today. Tooling for the trigger guard castings is on schedule for a July Trial & Pilot (T&P). Fixturing for the secondary machining is a critical path item for July T&P. Alternate methods for the secondary machining are being investigated to keep the T&P on schedule.

The long action boxes for the design acceptance test have passed inspection. The short action sample is in process at the vendor and is expected in one week. The design of the latch retaining tab has been resolved and was transmitted to the vendor on May 27. Work on tooling for the boxes will commence immediately. Product Team decided all trigger guards and magazine boxes would be powder coated to guarantee a good color match between the magazine box and the trigger guard. It should be noted that powder coating the floorplate will make the future addition of artwork difficult due to the tendency of the powdercoat to fill and cover any surface imperfections, including intentional marking or engraving.

The first stocks inlet for the M/700 DM at S&K were received last week. A cursory check of the stocks here showed a mismatch in the depths of the latch relief cuts, but Maurice Monteau felt this would be an easy item to correct. All other inletting appeared to be good. Maurice will visit S&K next week and run corrected samples for finishing if time permits.

Sample waxes and parts for the magazine latches have been received from the investment casting vendor. Three separate samples of waxes for the long action magazine follower have been received from the vendor. The first two samples contained errors that were corrected in the third and final version of the wax. Approximately 50 investment cast samples of each component are expected here early next week for our evaluation. Design and build of tooling for the secondary machining of the investment cast parts is underway. I visited the mold vendor for the MIM latches to approve the checkering electrodes for the die. The molds for the latches and the short magazine followers are expected the second week in June. Latches for design acceptance testing are being made in the tool room.

Design acceptance testing starts today.

M/700 SS for 1993
Trial and pilot testing was successfully completed.

M/700 Synthetic Stock
The drawing package for the Remington made synthetic stock was transmitted in May. Mold run off is still scheduled for 6/14.

CONFIDENTIAL-SUBJECT TO PROTECTIVE ORDER
KINZER V. REMINGTON

M/700 Classic for 1994 - 6.5 x 55 Swedish Mauser

Work on this project has been delayed by my work on the M/700 DM project. Transmittal of the drawing package will take place next week.

CONFIDENTIAL-SUBJECT TO PROTECTIVE ORDER
KINZER V. REMINGTON

M-700 3 POSITION WITH
SEPARATE BOLT LOCK

3

R2539431

CONFIDENTIAL-SUBJECT TO PROTECTIVE ORDER
KINZER V. REMINGTON

CLASS 42 SUBCLASS 67

July 11, 1950 M. H. WALKER ET AL 2,514,981

FIRING MECHANISM FOR FIREARMS

Filed Feb. 12, 1948 2 Sheets-Sheet 1

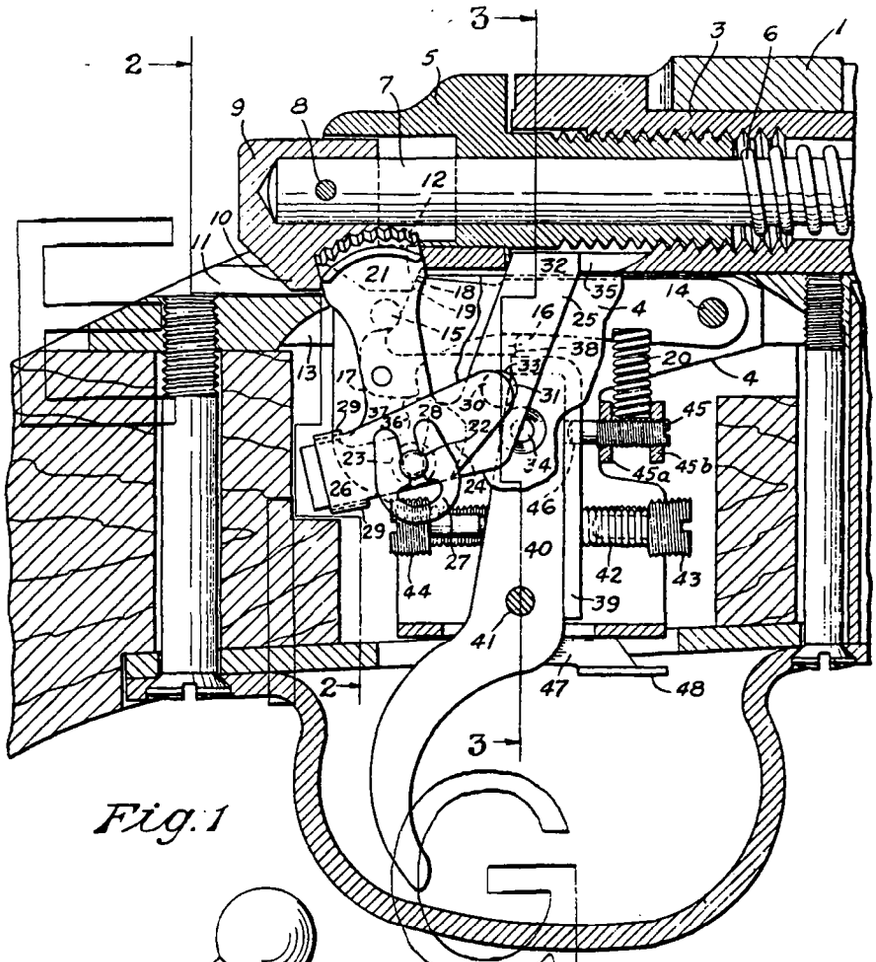

Fig. 1

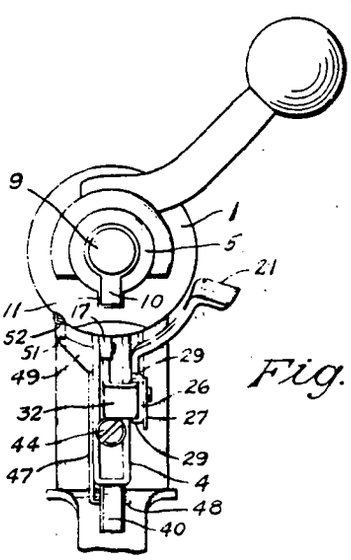

Fig. 2

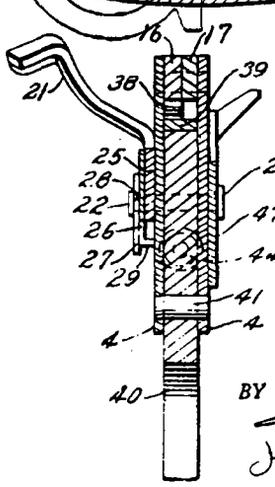

Fig. 6

INVENTORS
MERLE H. WALKER
BY PHILIP R. HASKELL
John H. Lewis Jr.

CONFIDENTIAL-SUBJECT TO PROTECTIVE ORDER
KINZER V. REMINGTON

July 11, 1950 M. H. WALKER ET AL 2,514,981

FIRING MECHANISM FOR FIREARMS

Filed Feb. 12, 1948 2 Sheets-Sheet 2

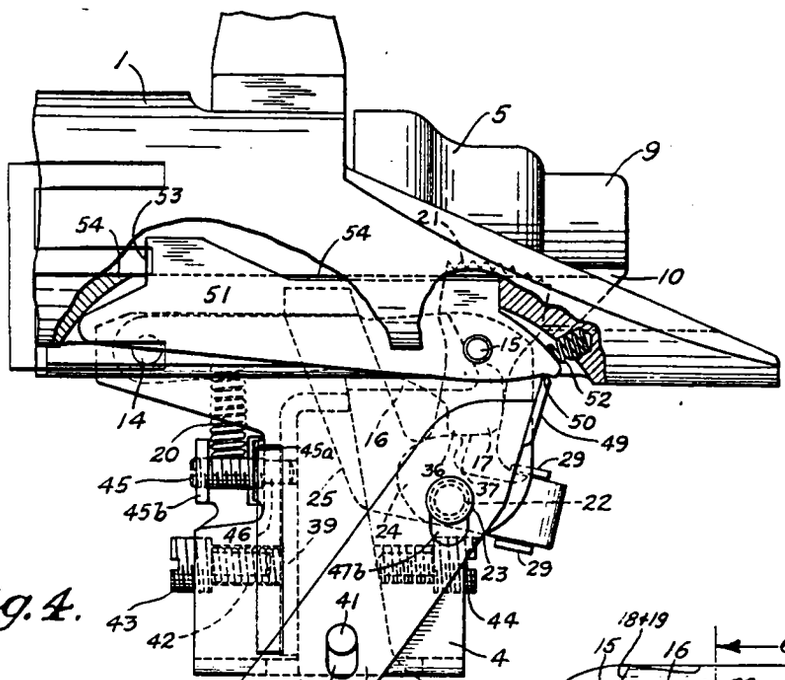

Fig. 4.

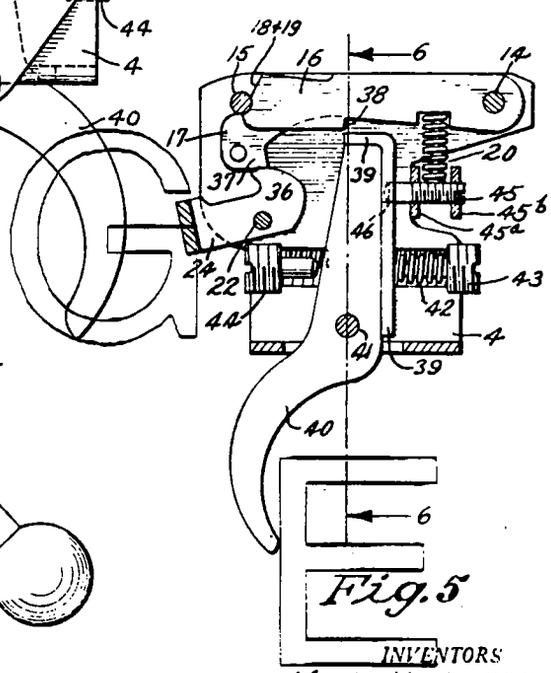

Fig. 5

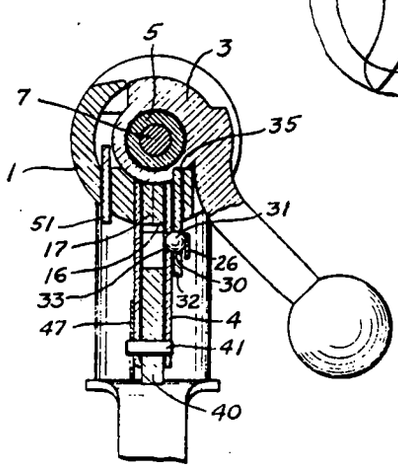

Fig. 3

INVENTORS
MERLE H. WALKER
BY PHILIP R. HASKELL
John H. Lewis Jr.

CONFIDENTIAL-SUBJECT TO PROTECTIVE ORDER
KINZER V. REMINGTON

Patented July 11, 1950 2,514,981

UNITED STATES PATENT OFFICE

2,514,981

FIRING MECHANISM FOR FIREARMS

Merle H. Walker and Philip R. Haskell, Ilion, N. Y., assignors to Remington Arms Company, Inc., Bridgeport, Conn., a corporation of Delaware

Application February 12, 1948, Serial No. 7,778

5 Claims. (Cl. 42-~~86~~) 70

1

This in~~vention relates~~ to firearms and has particular re~~ference to mea~~ns for controlling the firing thereof.

Many well-known firearms employ a breech closing bolt which has a reciprocating movement in opening and closing the breech and which may be locked in the closed position by any suitable means. Most of these firearms are provided with spring-urged bolt mounted strikers or firing pins and depend upon means relatively fixedly mounted in the receiver to engage the firing pin or an extension thereof to restrain it against forward movement and to insure trigger controlled release when such release is desired. It is to this type of firearm that our invention is particularly applicable.

A suitable fire control for a firearm of this type provides readily operable means for locking the firing pin positively in a "Safe" position as well as a trigger controlled sear to permit the instant release of the firing pin when it is desired to fire. The value of any safety is proportional to the positiveness of its action. To this end we have found it to be essential that the safety means be so arranged that an inadvertent operation of the trigger while the safety is in "Safe" position will not condition the arm to fire upon release of the safety. The value of any type of sear mechanism is proportional to the degree in which it provides for facile, clean, release free from the disturbing effects of drag, creep, or slap.

It is an object of our invention to provide a fire control having a safety which operates by positively moving the firing pin rearwardly out of contact with the sear and there releasably retaining it. In this way, should the trigger be operated while the safety is engaged, the trigger and sear springs will immediately reposition the mechanism to catch the firing pin upon release of the safety.

It is a further object of this invention to provide a sear and control therefor which operate on barely perceptible movement of the trigger, yet releases the firing pin instantly and completely

It is contemplated that these objects may be best attained by mounting on the receiver a housing containing two similarly shaped members engageable with the firing pin in such a way that the firing pin energy urges the members to move out of opposition thereto. One of these members may be conveniently identified as a safety cam and the other as a sear. A safety piece arranged to move into contact with the safety cam and a trigger assembly arranged to releasably oppose disengaging movement of the sear, provide for controlling the movement of these members, and through them the firing pin is controlled.

The exact nature of the invention as well as

2

other objects and advantages thereof will become more clearly apparent from consideration of the specification referring to the accompanying drawings in which:

Figure 1 is a vertical, longitudinal sectional view of a portion of the assembled rifle action.

Figure 2 is a rear elevational view of the receiver and trigger housing assembly.

Figure 3 is a vertical, transverse sectional view on the line 3—3 of Fig. 1, the stock and trigger guard having been removed to correspond with Fig. 2.

Figure 4 is a partial left side elevational view of the receiver and trigger housing assembly.

Fig. 5 is a right side elevational view of the fire control assembly, the right-hand side plate and elements supported directly thereon having been removed for clarity in illustrating the interior construction.

Fig. 6 is a vertical sectional view taken on the line 6—6 of Fig. 5.

Referring to the drawings by characters of reference, it may be seen that the portion of a rifle action which is illustrated comprises a re~~ceiver~~ 1 which serves as a housing for a conventional type of upturn and pull back bolt 3 and as a mounting for a trigger housing 4. In the usual fashion the rear end of the bolt is closed ~~with a bo~~lt plug 5 which serves as an abutment ~~for the~~ main spring 6 and as a guide for the firing pin 7. Secured on the rear end of the firing pin by a cross pin 8 is a firing pin head or ~~cocking~~ piece 9. The cocking piece is formed ~~with~~ a rib 10 which is slidably received in a groove 11 in the receiver and with an angularly disposed sear engaging face 12.

A longitudinally extending mortise 13 is milled through the bottom wall of the receiver to accommodate the ~~trigger housing~~ 4 which is secured therein by ~~cross pins 14~~ and 15 mounted in the receiver and passing through the trigger housing assembly to serve as pivots and stops for elements therein.

Between the side plates of the trigger housing which may be conveniently blanked and formed from a single piece of sheet metal, the front cross pin 14 pivotally supports the sear 16 and the safety cam 17. Each of these members occupies substantially half of the width between the side plates and in their top contour they are substantially identical. They are provided with similar striker engaging faces 18 and 19, the angular relationship between these striker engaging surfaces and the sear engaging face 12 being such that there is a tendency for sear and safety cam to swing counter-clockwise about the pivot pin 14 under the urging of the main spring 6 which acts through the firing pin 7. Such an angular relationship between the engaging faces and the radius passing through the contact point is com-

CONFIDENTIAL-SUBJECT TO PROTECTIVE ORDER
KINZER V. REMINGTON

monly known as a "negative angle" as distinguished from a "positive angle" where the force components act to retain the two surfaces in engagement. This tendency is slightly resisted by the sear spring 20 which engages both sear and safety cam with sufficient pressure to urge them to turn clockwise when they are free from the firing pin load until they are stopped by engagement with pin 15. Positive means to be next described are provided for absolutely preventing movement of sear and safety cam under main spring urging except when such movement is desirable.

A safety 21 is pivotally mounted on a pivot pin 22 which has an enlarged head 23 on the left outside wall of the trigger housing and passes therethrough to support the inner arm 24 of the safety between the side plates and the outer arm 25 outside the right hand wall. A leaf spring 26 is also received on the safety pivot pin and the assembly is held together by a wishbone key 27 engaged with an annular groove 28 in the pin. The rear end of the leaf spring is provided with inturned legs 29 which straddle the outer arm 25 and constrain the spring to turn with the safety. The forward or free end of the leaf spring overlaps a hole 30 in the bolt lock arm 32 of the safety. Loosely seated in the hole 30 is a ball detent 31 which is pressed into alternative engagement with detent holes 33 or 34 formed in the side wall of the trigger housing to releasably retain the safety in the desired position. It will be seen that the bolt lock arm 32 is in position to pass upwardly through the bottom wall of the receiver into engagement with a notch 35 in the bolt and lock same against rotation when the safety has been turned to its counterclockwise limit of rotation or "Safe" position. In the clockwise or "Firing" position, arm 32 does not extend through the receiver wall and the bolt may be readily turned to unlock the action.

Inner arm 24 of the safety is provided with an eccentric 36 which is disposed beneath the heel 37 of the safety cam. With the safety in "Firing" position, the eccentric does not engage the safety cam and release of the cocking piece by the sear will permit the safety to be cammed out of the way. However, when the safety has been rotated into "Safe" position the eccentric has engaged the heel of the safety cam and lifted it slightly. Since the safety cam engages the cocking piece on an angle, the effect of this upward movement will be to cam the cocking piece slightly to the rear. This rearward movement insures that the sear will be returned by the sear spring to position for full engagement with the cocking piece if the trigger should be inadvertently operated while the safety is effective.

As has been previously noted, the sear 16 is of the so-called "negative angle" type and under pressure of the main spring tends to rotate itself out of engagement with the cocking piece. The sear is supported against this disengaging force by engagement of the step 38 with the connector 39. Connector 39 is bent to substantially a right angle and lies against the front face and over the top of the trigger 40 which is pivotally mounted on a pin 41 passing through the side plates of the trigger housing 4. Trigger spring 42 seats against an adjustable screw 43 and bears on the forward face of the connector resiliently urging the connector into engagement with the trigger and through the connector,

resiliently urging the upper end of the trigger rearwardly. Movement of the trigger is limited in extent by an adjustable rear stop screw 44 which obviously limits the amount of engagement which the connector has with the sear step 38. Ordinarily, this latter adjustment will be made to a minimum safe value and the screw staked in place at the factory. Since the forces upon either screws 43 or 44 are not great, they may conveniently be of slightly greater diameter than the distance between the inside faces of the trigger housing 4 and have threaded engagement with an incomplete thread cut in those inside faces. Forward stop screw 45 serves as a convenient support for the sear spring 20 and passes freely through a hole 46 in the connector to oppose the trigger proper. To facilitate the support of the spring and to provide a rigid mounting, this screw may conveniently be mounted in threaded holes in brackets 45a and 45b turned inwardly from the side walls of the trigger housing 4. This stop screw provides an adjustment to positively stop trigger movement just as the sear is released and makes possible the complete elimination of undesirable trigger slap or overtravel. This complete elimination of trigger slap could not, however, be accomplished without endangering the crispness of the letoff if it were not for the flexible mounting of the connector, for it is not practicably possible to produce and maintain absolutely sharp square corners on the engaging surfaces of a sear and conventional trigger. Invariably after normal wear these corners will be rounded on a small radius which will permit the movement of the sear to start before the trigger has fully disengaged therefrom. If the sear is to completely release the striker a conventional trigger must have an overtravel or slap and the release will not be clean and crisp. If we examine the functioning of the unit, we will observe that the trigger and connector move as a unit until the instant the connector starts to clear the edge of the sear step. At this point the trigger stops but the connector is restrained only by the relatively light trigger spring 42 and, as the sear is cammed down, the radii existing on the points of the connector and sear cause the connector to be cammed forwardly and completely clear the sear step. This allows a clean crisp let-off closely approaching the target shooter's ideal without requiring any additional trigger movement after release is first instigated. These advantages of freedom from creep or slap with the short light trigger pull, crisp let-off, and short lock time characteristic of negative angle sears, have been achieved in a construction which is absolutely safe in the hands of the hunter or target shooter and rugged enough to remain so in spite of the abuse and neglect which are often heaped upon sporting arms.

It will be noted that clearance is provided in the lower face of the safety cam so that it cannot engage the connector and that the heel of the sear does not extend to a point where it can engage the safety eccentric. Thus, the operation of safety and sear is entirely independent in spite of their common mounting, common spring, and similar engagement with the cocking piece.

Mounted on the left hand side of the trigger housing is the bolt stop release 47 which has elongated slots 47a and 47b supported beneath the head 23 of the safety pivot pin 22 and on the left end of the trigger pivot pin 41. A finger

CONFIDENTIAL-SUBJECT TO PROTECTIVE ORDER
KINZER V. REMINGTON

piece 48 extends into the trigger guard in position to be engaged by the finger for generally vertical movement and a lateral extension 49 at the upper end engages a notch 50 in the tail of the bolt stop 51. Preferably the slots 47a and 47b are disposed at an angle to each other so that the release has a combined translational and swinging movement, causing the extension 49 to follow closely the arcuate path of the notch 50. Support for the bolt stop is provided by the bolt stop pin 15 which, as previously noted, assists in retaining the trigger housing in assembled relation to the receiver. The bolt stop is resiliently urged to swing about the pin 15 in a clockwise direction, as viewed in Fig. 4, by a spring 52 seated in a blind hole in the receiver. Extending into the receiver under spring urging and withdrawable by the action of the shooter's finger on the fingerpiece 48 is the bolt stop shoulder 53. This shoulder normally extends a substantial distance into the usual type of guide track 54 for the left hand bolt locking lug and places a definite rearward limit upon movement of the bolt. Since the bolt stop release 47 is protected by the trigger guard from accidental contact with brush, a saddle scabbard or any other object which might dislodge an externally mounted bolt stop, it will be a practical impossibility to inadvertently pull the bolt free of the receiver.

Although a single specific embodiment has been illustrated and described in detail, it should be understood that the invention is not to be considered as limited to the exact embodiment disclosed. It is intended that all modifications and equivalents falling within the terms of the appended claims shall be considered as a part of the invention.

We claim:

1. Fire control means for a firearm having a spring urged striker comprising means defining a negative angle sear engaging face on said striker; a pivotally mounted sear having formed thereon a negative angle face arranged for engagement with the face of said striker; trigger means to releasably support said sear against disengagement from said striker as a result of striker spring force acting through said negative angle faces; sear spring means tending to restore said sear to striker engaging position; a pivotally mounted safety cam constructed and arranged to have negative angle engagement with said striker substantially similar to that of said sear; and manually actuable safety operating means comprising an eccentric member manually rotatable about a fixed axis between a "Firing" position and a circumferentially displaced "Safe" position, said fixed axis being so disposed relative to said safety cam that said eccentric will not engage the safety cam in "Firing" position and in "Safe" position will have engaged said safety cam and shifted same into said further engagement with the striker.

2. Fire control means for a firearm having a receiver and a main spring-urged striker therein comprising an abutment on said striker having a sear engaging surface; a sear pivotally mounted in said receiver and engageable with said abutment surface, said sear being so arranged relative to said abutment that a line projected between the point of contact with said surface and the point of pivotal mounting of the sear makes an angle of greater than 90 degrees with said surface and a component of main spring force acts to disengage the sear from said abutment; a lug on said sear; a trigger; means to pivotally support said trigger with a portion thereof beneath said lug; a connector overlying the portion of said trigger beneath said lug and carried thereby, said connector having an aperture therethrough and providing a surface releasably engageable with said lug; a trigger spring engaged with said connector arranged to act through said connector in opposing movement of said trigger; and trigger stop means passing through said aperture in position to limit movement of the trigger without retarding movement of said connector, said trigger and connector being so constructed and arranged that movement of the trigger into contact with said stop means will substantially complete the disengagement of said connector from said lug and further movement of the connector relative to the trigger will allow the sear to move without material impairment by said connector.

3. Fire control means for a firearm having a trigger housing and a sear which is acted upon by a force tending to release the sear comprising a lug on said sear; a trigger pivotally mounted in said housing having a surface movable into and out of a position opposed to said lug; a connector carried by the trigger and movable relative thereto, a portion of said connector overlying said surface and arranged to be engaged between said surface and said lug, said connector being arranged on said trigger to be moved thereby in the direction of disengagement from said lug and being also arranged to be capable of movement relative to said trigger in the direction of disengagement from said lug; spring means opposing movement of said connector relative to the trigger; and positive stop means on said housing arranged to block further movement of the trigger after the trigger has been moved to a position in which disengagement of said connector from said lug is substantially complete.

4. Fire control means as described in claim 3, said pivotally mounted trigger comprising an elongated member of which an end face forms said lug opposing surface; and said connector comprising an L-shaped member, one leg of which overlies said end face to be engaged with said lug while the other leg of said L-shaped member lies against said elongated member; said spring means being engaged between said other leg and said housing and tending to yieldingly hold said other leg in engagement with said elongated member.

5. Fire control means as described in claim 4, said L-shaped member being formed to provide an aperture through said other leg; said positive stop means comprising a screw adjustably mounted in said housing and passing loosely through said aperture in position to engage said elongated member when said trigger has been moved to said position in which disengagement is substantially complete.

MERLE H. WALKER.
PHILIP R. HASKELL.

REFERENCES CITED

The following references are of record in the file of this patent:

UNITED STATES PATENTS

Number	Name	Date
1,425,808	Thompson	Aug. 15, 1922
2,386,205	Garand	Oct. 9, 1945

CONFIDENTIAL-SUBJECT TO PROTECTIVE ORDER
KINZER V. REMINGTON

CLASS 42 SUB 70

Copy for OLIN PATENT BOOK

expired Jan. 1976

W

Jan. 20, 1959 W. J. COUTURE (OLIN) 2,869,269

SAFETY MECHANISM FOR FIREARMS

Filed June 2, 1955 3 Sheets-Sheet 1

OLIN 3-POSITION SAFETY

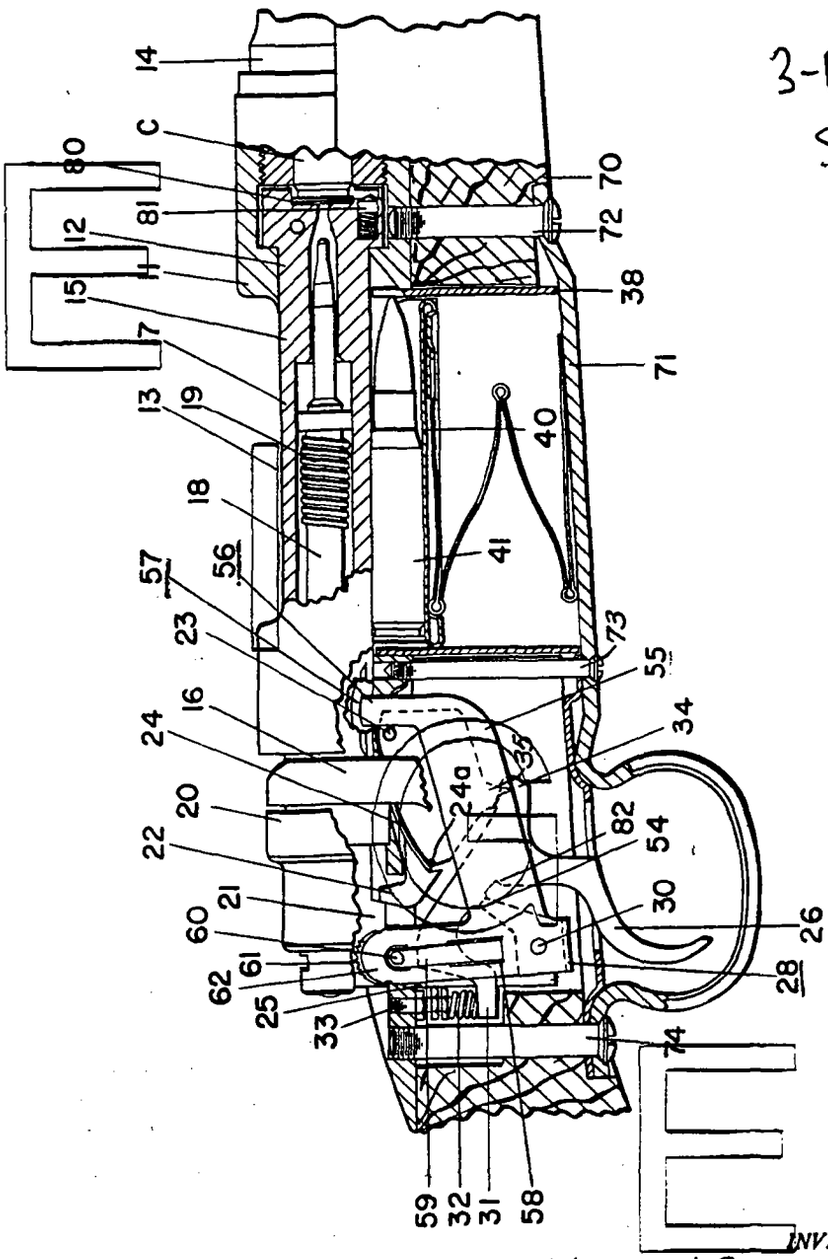

FIGURE 1

INVENTOR.
WILFRED J. COUTURE, DECEASED
by CLARA M. COUTURE, ADMINISTRATRIX
BY Stefan M. Stein
ATTORNEY

L

CONFIDENTIAL-SUBJECT TO PROTECTIVE ORDER
KINZER V. REMINGTON

Jan. 20, 1959 W. J. COUTURE 2,869,269

SAFETY MECHANISM FOR FIREARMS

Filed June 2, 1955 3 Sheets-Sheet 2

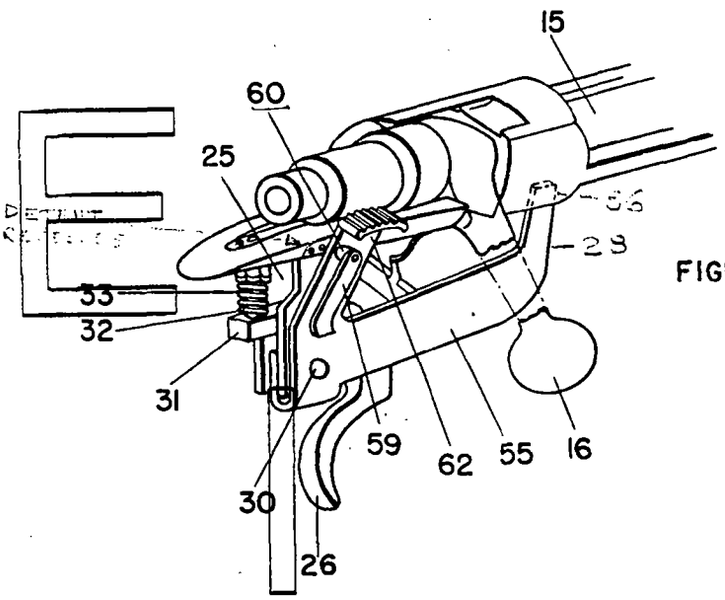

FIGURE 2

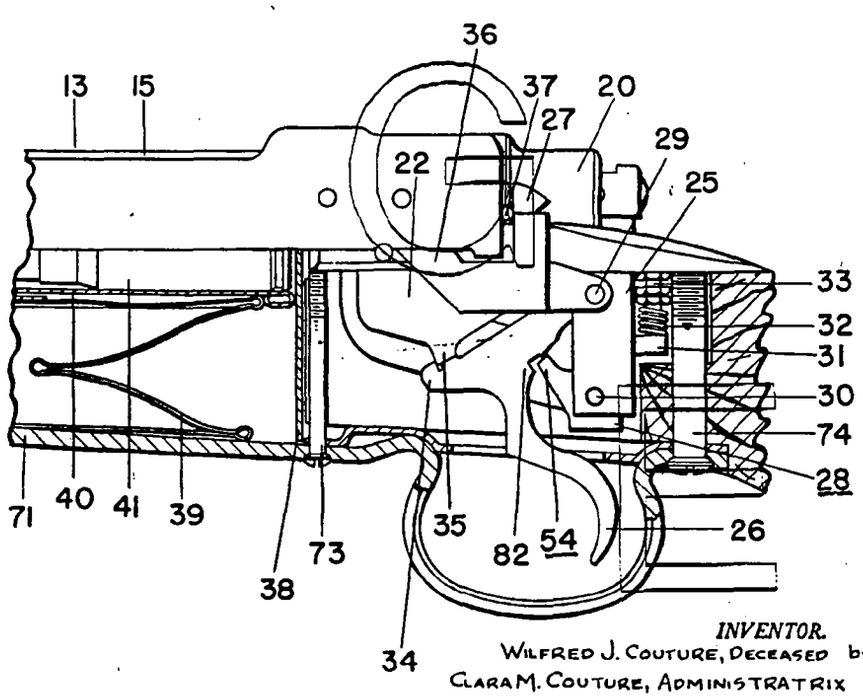

FIGURE 3

INVENTOR.
WILFRED J. COUTURE, DECEASED by
CLARA M. COUTURE, ADMINISTRATRIX

BY Stefan M. Stein
ATTORNEY

CONFIDENTIAL-SUBJECT TO PROTECTIVE ORDER
KINZER V. REMINGTON

R2539438

Jan. 20, 1959 W. J. COUTURE 2,869,269

SAFETY MECHANISM FOR FIREARMS

Filed June 2, 1955 3 Sheets-Sheet 3

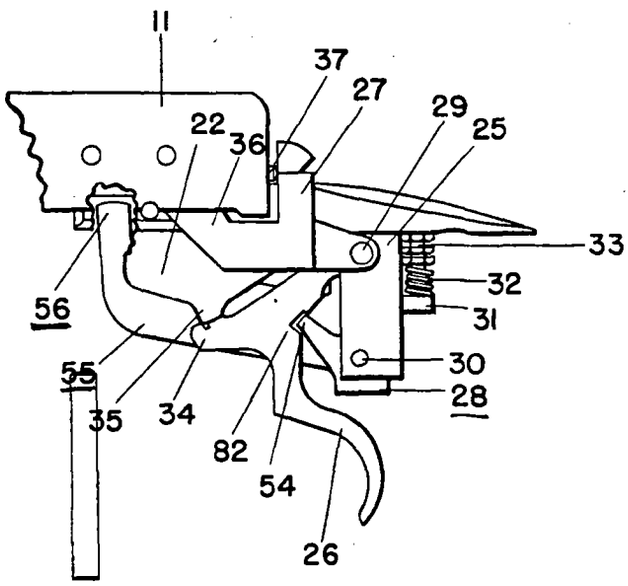

FIGURE 4

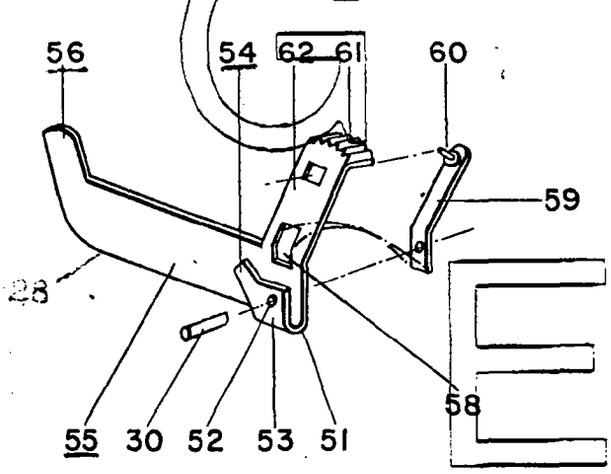

FIGURE 5

INVENTOR.
WILFRED J. COUTURE, DECEASED by
CLARA M. COUTURE, ADMINISTRATRIX

BY Stefan M. Stein
ATTORNEY

CONFIDENTIAL-SUBJECT TO PROTECTIVE ORDER
KINZER V. REMINGTON

United States Patent Office

2,869,269

Patented Jan. 20, 1959

1

2,869,269

SAFETY MECHANISM FOR FIREARMS

Wilfrid J. Couture, deceased, late of New Haven, Conn., by Clara M. Couture, administratrix, New Haven, Conn., assignor to Olin Mathieson Chemical Corporation, a corporation

Application June 2, 1955, Serial No. 512,606

~~1 Claim.~~ (Cl. 42—70)

This invention relates to a firearm and more particularly to a novel safety mechanism for a firearm of the bolt action type.

In bolt action rifles of the upturn and pullback type, it is desirable to incorporate into the gun a safety mechanism which not only can lock the trigger but also can lock the bolt. The former is desirable to prevent accidental firing while the latter is desirable to prevent accidental release of the bolt.

An object of this invention is a safety mechanism for a bolt action rifle which is simple and economical in construction and adapted for use upon a gun of the upturn and pullback type. A further object of this invention is a novel safety mechanism which operates both upon the trigger and upon the bolt so as to completely lock the gun. A still further object of this invention is to provide a novel safety mechanism which permits movement of the bolt while the trigger is locked thereby enabling safe unloading of the gun. Another object of this invention is to provide a novel safety mechanism which cams the cocking shoulder of the trigger against the engaging sear surface of the sear. Other objects will become apparent to those skilled in the art upon reading the following detailed description and accompanying drawings in which,

Figure 1 is a partial right side view of a bolt action rifle showing an embodiment of the safety mechanism of this invention as it appears in a "fully on" position, that is, when both the bolt and the trigger are locked,

Figure 2 is a broken right side perspective view of the rifle showing the safety mechanism and its spring detent,

Figure 3 shows a partial left side view of the bolt action rifle shown in Figure 1 but in which the safety mechanism is in a "partially on" position, that is, locks only the trigger,

Figure 4 is a partial left side view of the rifle shown in Figure 3 showing the safety mechanism in an "off" position, and

Figure 5 is a perspective view of the disassembled safety of this invention.

The illustration in the accompanying drawings show the use of the safety mechanism of this invention in a bolt action rifle of the so-called upturn and pullback type. This name is applied because the bolt is withdrawn from the chamber by grasping the operating handle, turning it up and pulling it back. This type of gun generally consists of a receiver 11 of tubular shape having sliding channels on its inner surface to form a bolt receiving passage. It also has an upward facing load and ejection opening 13. A barrel 14 is threaded to the front or muzzle end of the receiver, said barrel having a chamber section at its breech end.

A sliding cylindrical bolt 15 having sliding and locking lugs thereon is contained within the bolt receiving passage of the receiver. Operating handle 16 extends sidewise from said bolt. The bolt consists of a tubular

2

casing 17 in which is contained a firing pin 18, spring loaded by a firing pin spring 19. Threaded into the rear end of the tubular casing 17 is a bolt sleeve 20 through which the firing pin extends rearwardly. Extending downwardly from the rear end portion of the firing pin is a sear engaging lug 21 which acts as a cocking shoulder for engagement by a sear 22. Sear 22 pivots about sear pin 23 to enable release of the firing pin if it is cocked (as shown). The sear is normally held against the sear engaging lug of the firing pin by sear spring 24.

Extending downwardly from the receiver is a support member 25 which acts to support a trigger 26, a bolt release 27 and a safety 28. The trigger and the bolt release lock are pivoted for rotation about trigger pin 29 while the safety is pivoted for rotation about safety pin 30.

The trigger 26 consists of sheet metal stock having a rearwardly extending lug 31 upon which a trigger pin spring 32 rests in a normally compressed state. A downwardly extending adjustable guide rod 33, adjusted to avoid contact with the rear lug 31 of the trigger pin guides the spring 32 in its operation. Extending forwardly in the trigger and engaging the sear is a cocking shoulder 34. This shoulder contacts the sear 22 at its shoulder 35 and blocks counterclockwise (Fig. 1) movement of the sear until the trigger is pulled rearwardly. When the trigger 26 is pulled rearwardly (to the left as viewed in Fig. 1) the shoulders 34 and 35 slip past one another and become unblocked thus freeing the sear to rotate counterclockwise (Fig. 1) about sear pin 23. The sear spring 24 comprises a flat leaf having a laterally projecting lug (not shown) which engages the sear as at 24*a*. The sear spring 24 is suitably mounted in the body of the rifle so that it normally tends to cause the sear 22 to rotate in a clockwise direction as viewed in Fig. 1. In spite of the urging of the sear 22 in a clockwise direction by the sear spring, the force of the firing pin spring 19 is dominant and is sufficient to cause the bolt 15 to move to the right when the sear is in the unblocked condition. During the course of the motion of the bolt 15 to the right the lug 21 of the bolt rides over the sear 22 and cams it downwardly in a counterclockwise direction about the sear pin.

The bolt release 27 is also of sheet metal stock having an upwardly extending member 36 which extends through a slot in the receiver 11 and into the slide passage of the front lug of the bolt to prevent complete removal of the bolt. This bolt release is normally kept in a bolt engaging position by spring plunger 37 which spring loads against an upward extending arm of the bolt release 27.

Directly beneath the load and ejection opening 13 of receiver 11 is magazine 38 of the box type. Within said magazine is contained magazine spring 39, spring loading a magazine follower 40 upwardly. Resting upon said follower is cartridge 41. Additional cartridges may be stored within said magazine, if desired.

The safety 28 of this invention is affixed to the lower end of support member 25. As shown in unassembled relationship in Figure 5, it consists of sheet metal stock folded over at its lower end 51 to form an uneven armed U-shaped member. A hole 52 is drilled through said members to receive safety pin 30, thereby producing a journal bearing for said safety. The short arm 53 of the inverted U-shaped member has a forwardly extending stop member 54 which engages the trigger when assembled upon the gun. The long arm 62 of the U-shaped member has a much larger forwardly extending locking lug 55 extending from the lower portion of said arm up through a slot in the receiver. Its tip 56 en-

CONFIDENTIAL-SUBJECT TO PROTECTIVE ORDER
KINZER V. REMINGTON

R2539440

gages a notch 57 in the bolt when said bolt is in battery position. In an unlocked position it extends to a point below the notch 57. The long arm of the U-shaped member also contains a vertical slot 58 through which leaf spring 59 extends. The lower end of the leaf spring is shaped to encircle the safety pin 30 while the upper end contains a lug 60 which engages a flat on the receiver in which three depressions are formed. Engagement of the lug 60 and the left depression (Fig. 2) represents the position in which the bolt and the trigger are blocked while engagement of the lug 60 with the middle depression represents the position of the safety in which the bolt is free to be opened and the trigger alone is latched or blocked. When the safety is in the right-hand position shown in Fig. 2 (with the lug 60 in engagement with a depression which is not visible) both the trigger and the bolt are unlocked. A ratchet mechanism for controlling the position of the safety thereby results. Topping the long arm 62 of the U-shaped member is a finger piece 61 having ridges therein for frictional engagement with the thumb of the shooter.

The receiver assembly is affixed to a gun stock 70 by means of trigger guard plate 71 through which bolts 72, 73 and 74 extend and are threaded into the receiver.

To operate the gun, the shooter first loads the gun by opening the action. This is performed by lifting up on the operating handle 16 and pulling back the bolt 15 until its forward locking lug is stopped by the bolt engaging arm 36 of the bolt release 27. Cartridges are then inserted through the load opening 13 of the receiver into the magazine 33. The bolt is then rammed home and in so doing, the top cartridge in the magazine is driven into the chamber section of the barrel 14. The rear of the cartridge contained in the chamber, designated C in Figure 1, is supported by the cartridge seat face 80 of the bolt and its rim is engaged by a spring biased extractor 81 which protrudes partly across the cartridge seat face. The operating handle is then turned downwardly to cock the firing pin through engagement of the downward extending lug 21 of the firing pin 18 with the sear 22. This sear is normally held in an upward position by the sear spring 24.

At this time, it is generally the practice to operate the safety. It is placed in a fully "on" position by pulling the finger piece 61 of the safety completely toward the rear. Lug 60 "snaps" into the several depressions on the flat of the side wall of the receiver. In its rearmost position both the bolt 20 and the trigger 26 are locked by the safety—the bolt by reason of safety tip 56 engaging notch 57, and the trigger by reason of stop member 54 wedging the cocking shoulder 34 of the trigger against the sear shoulder 35 of the sear. A completely safe transportable gun is thereby enabled. Any jar against the trigger or against the operating handle will not cause firing or accidental opening of the bolt because both the pin and the bolt are locked.

Should one desire to unlock the bolt while retaining the trigger in its safety position as generally required when unloading the gun, the finger piece 51 of the safety is moved forwardly until the safety lug "snaps" into a center notch. In this condition the bolt can be operated in the normal fashion but the trigger cannot be pulled because it engages nose 54 of the safety 28. The bolt has been unlocked because the safety tip 56 has been disengaged from notch 57 of the bolt.

Complete forward movement of the finger piece 61 completely releases the bolt and trigger. The gun may then be fired by pulling the trigger. In such instance, the safety tip 56 is out of engagement with the notch 57 of the bolt and the stop member 54 is opposite a groove 82 in the trigger (see Figure 4).

Pulling the trigger releases the sear 22 which pivots about its sear pin 23 by the force of the firing pin spring 19 acting through the firing pin lug 21. The firing pin 18 is driven into the igniter of the cartridge C by the firing pin spring 19 and bullet is ejected from the muzzle of the gun.

After firing, the cartridge case C is extracted from the chamber by lifting the operating handle 16 and pulling it rearwardly. By so doing, the extractor 81 grips the rim of the cartridge case pulling it rearwardly. An ejector within the bolt housing pushes forward through an orifice in the cartridge seat face thereby causing the cartridge to pivot around the extractor as it clears the forward portion of the load and ejection opening 13 of the receiver 11. The fired cartridge case is thereby ejected. The gun is reloaded by forward movement of the bolt to drive another cartridge contained in the magazine into the chamber section of the barrel. The action of the gun may then be repeated as described above.

Obviously, certain modifications are possible, for example the ratchet mechanism of the safety may be of different design. A projection instead of the leaf spring from the long arm of the U-shaped member may be used to engage the staggered depressions in the flat on the receiver wall. One might also employ a ratchet mechanism at the bearing section of the safety. Another obvious variation could be in the bearing section of the safety. It could be a solid journal having appropriate arms extending therefrom to act as a stop member and a bolt engaging tip. In the gun itself many modifications can obviously be made without changing the operation of the safety. Here again, these should not deter from the scope of the described safety and its use.

The inventions having thus been described what is desired to be secured by Letters Patent is as follows:

In a bolt action firearm including a bolt, a slidable firing pin, a trigger and a receiver, a safety device pivotally mounted upon the receiver, said device comprising a metallic, U-shaped member formed with a locking lug and a stop, said lug and said stop being directly engageable with the bolt and with the trigger respectively for locking the bolt and for blocking the operation of the trigger, said safety device being rotatable to a first position wherein the bolt and the trigger are both locked, said safety device being rotatable to a second position wherein the trigger only is locked and leaf spring means mounted upon the safety device and cooperating with the receiver for locking the safety device selectively in either of said two positions.

References Cited in the file of this patent

UNITED STATES PATENTS

1,054,069	Wilson	Feb. 25, 1913
1,446,763	Nelson	Feb. 27, 1923
1,843,916	Cole	Feb. 9, 1932
2,174,971	Crockett	Oct. 3, 1939
2,490,474	Roemer	Dec. 6, 1949
2,765,562	Roper et al.	Oct. 9, 1956

CONFIDENTIAL-SUBJECT TO PROTECTIVE ORDER
KINZER V. REMINGTON

R2539441

42 70

141

W

F. A. WILLIAMS.

COMBINED SAFETY AND BOLT LOCK FOR GUNS.

APPLICATION FILED FEB. 14, 1919.

1,318,423.

Patented Oct. 14, 1919.

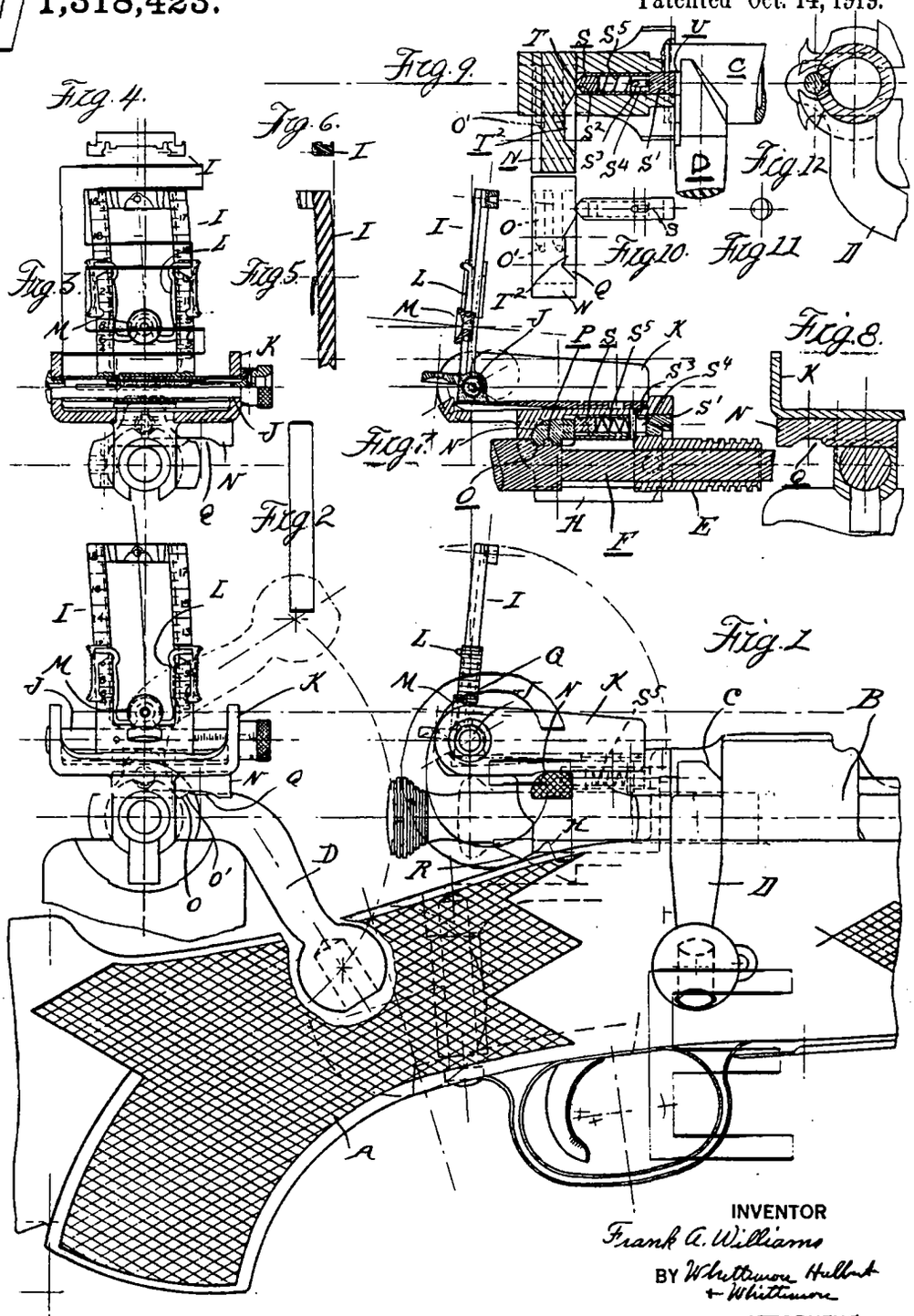

INVENTOR

Frank A. Williams

BY Whittemore Hulbert & Whittemore

ATTORNEYS

CONFIDENTIAL-SUBJECT TO PROTECTIVE ORDER
KINZER V. REMINGTON

UNITED STATES PATENT OFFICE.

FRANK A. WILLIAMS, OF DETROIT, MICHIGAN.

COMBINED SAFETY AND BOLT LOCK FOR GUNS.

1,318,423. Specification of Letters Patent. Patented Oct. 14, 1919.

Application filed February 14, 1919. Serial No. 276,944.

To all whom it may concern:

Be it known that I, FRANK A. WILLIAMS, a citizen of the United States of America, residing at Detroit, in the county of Wayne and State of Michigan, have invented certain new and useful Improvements in Combined Safety and Bolt Locks for Guns, of which the following is a specification, reference being had therein to the accompanying drawings.

The invention relates to guns of the bolt action type and has particular reference to constructions in which the rear sight is mounted above the bolt. It is the primary object of the invention to obtain a construction of safety which does not interfere with the sight mounting. And further to obtain a construction which performs auxiliary functions as hereinafter set forth.

In the drawings:

Figure 1 is a side elevation of a bolt action gun, showing the rear sight mounted above the bolt and provided with my improved safety;

Fig. 2 is a rear elevation of the bolt and sight;

Fig. 3 is a similar view of the sight detached;

Fig. 4 is a plan view of the sight;

Fig. 5 is a longitudinal section thereof;

Fig. 6 is a cross-section;

Fig. 7 is a longitudinal section through the sight, sleeve, firing pin and safety assembly detached;

Fig. 8 is a cross-section thereof in the central plane of the safety;

Fig. 9 is a horizontal section;

Fig. 10 is a plan view showing the relation of the safety and bolt lock;

Fig. 11 is an end elevation of the bolt lock;

Fig. 12 is a cross-section through the bolt in the plane of the lock.

A is the gun stock, B the frame, C the bolt, D the actuating bolt handle, E the sleeve, and F the firing pin of a standard bolt action assembly. G is a rear sight assembly which is mounted upon the sleeve E, but which is also provided with a bearing portion H for slidably engaging the frame so as to accurately position the sight. The construction of the sight assembly forms no part of the present invention, but as shown comprises a leaf frame I which is pivotally and laterally adjustably mounted on the shaft J in the bifurcated bracket member K, while a vertically adjustable spring frame L engages the leaf and carries the peep sight M.

The mounting of this sight above the sleeve interferes with the use of a rockable safety such as are provided on standard bolt actions, and I have therefore devised a safety of the following construction: N is a bar which slidably engages a transverse aperture in the sleeve between the mounting for the sight and the firing pin. Upon the lower face of this bar are the projecting ribs or teeth O adapted to engage corresponding ribs or teeth P on the firing pin. The bar N is of greater length than the bearing in the sleeve so that it can be adjusted in position by pressure on the projecting end into any one of three different positions. The lower surface of the safety is also cut away at Q so as to permit, in one position of its adjustment, the free movement of the firing pin, while in the other positions of adjustment the engagement of the teeth O and P will lock said firing pin. The entering ends of the teeth O are slightly beveled at O′ so that in engaging with the teeth P the pin F is slightly retracted. This has the effect of withdrawing the cocking nose R, so that in case the sear is withdrawn it can return again into position for engagement with the firing pin.

The safety N is held in its several positions of adjustment by a spring pressed detent S which is arranged in a longitudinal bore in the upper portion of the sleeve E. This detent S also performs the function of a bolt lock and to this end comprises a hollow member S′ and a pointed nose member S^2 at one end thereof. S^3 is a cross pin engaging an elongated slot S^4 in the member S′, and S^5 is a spring within the hollow member interposed between the pin S^3 and the nose piece S^2. The safety N is formed with a notch T for engaging the nose piece S^2 when in one position of adjustment, in which position the opposite end of the member S′ is projected beyond the bore and into engagement with a recess U in the bolt so as to lock the bolt from turning. The safety N is further provided with a groove T^2 into which the nose piece S^2 is forced by the tension of the spring S^5 when said safety is in the second or third position of adjustment. In either of these latter two posi-

CONFIDENTIAL-SUBJECT TO PROTECTIVE ORDER
KINZER V. REMINGTON
R2539443

tions the member S′ is retracted into the bore and is thereby withdrawn from engagement with the recess U, permitting the turning of the bolt.

With the construction just described, to place the mechanism on safety and also to lock the bolt from operation, the member N is in the position shown in Figs. 7 to 10. It will be noted that in this position the nose piece S^2 being in engagement with the notch T will hold the member N with the teeth O in full engagement with the teeth P, and therefore the firing pin is locked from movement within the sleeve. At the same time the member S being projected into engagement with the notch U prevents the rotation of the bolt. If it is desired to release the bolt and at the same time to continue the locking of the firing pin, the member N is adjusted to its intermediate position, where the nose piece S^2 is in engagement with the slot T^2. The teeth O and P are still in engagement with each other so that the firing pin is locked, but the movement of the nose piece S^2 into the slot T^2 permits the spring S^5 to withdraw the projecting end of the member S′, disengaging the same from the notch U and freeing the bolt for rotation. Thus, the operator is permitted to remove the bolt while the firing pin remains locked. In the third position of adjustment the cut away portion Q of the member N registers with the firing pin, so that the latter is free to move whenever released by the sear and the gun is consequently in condition for firing.

A safety constructed as above described in no way interferes with the sight assembly, for the member N is below the bifurcated member K in which is mounted the transverse pin J carrying the sight leaf. Furthermore, the safety may be manipulated more easily and conveniently than the rockable construction which has heretofore been used.

What I claim as my invention is:

1. In a gun of the bolt action type, the combination with a sleeve for the bolt having an upward extension forming a mounting for the sight, of a safety transversely adjustably mounted in said upward extension and engageable with the firing pin.

2. In a gun of the bolt action type, the combination with a sleeve for the bolt having an upward extension forming a mounting for the sight, of a safety in the form of a transversely slidable bar engaging an aperture in said upward extension between the sight mounting and the firing pin and engageable with the latter to lock the same.

3. In a gun of the bolt action type, the combination with a sleeve for the bolt having an upward extension forming a mounting for a sight, of a safety in the form of a transversely slidable bar having a tooth on the lower face thereof for engagement with the firing pin and being cut away at one point to clear said pin.

4. In a gun of the bolt action type, the combination with a sleeve for the bolt having an upward extension forming a mounting for a sight, of a safety in the form of a transversely adjustable bar engaging an aperture in said sight mounting and projecting beyond the same, said safety being adjustable into a plurality of positions and having a tooth for engagement with the firing pin in one of said positions and cut away to clear said firing pin in another position.

5. In a gun of the bolt action type, the combination with a sleeve and the firing pin therein, of a safety in the form of a transversely movable bar mounted in said sleeve, said safety bar having a tooth thereon for engaging said firing pin when in one position of adjustment and being cut away to clear said firing pin in another position of adjustment.

6. In a gun of the bolt action type, the combination with the bolt, the sleeve and the firing pin slidable therein, of a safety in the form of a transversely extending bar mounted in a bearing in said sleeve and projecting beyond the same, said safety bar having a tooth on one portion thereof for engaging a coöperating tooth on the firing pin and being cut away at another point for clearing the firing pin.

7. In a gun of the bolt action type, the combination with the bolt, the sleeve and the firing pin, of a safety in the form of a transversely movable bar mounted in said sleeve, having a toothed engagement with the firing pin in one position of adjustment and cut away to clear said pin in another position of adjustment, a spring pressed detent for holding said safety in its alternative positions of adjustment, and coöperating means on said safety for adjusting said detent into locking engagement with said bolt in one of its positions of adjustment.

8. In a gun of the bolt action type, the combination with the bolt, the sleeve and the firing pin, of a safety in the form of a transversely adjustable bar mounted in said sleeve and having a plurality of positions of adjustment, a spring pressed detent having one end engageable with said safety to hold the same in the different positions of adjustment and the opposite end being engageable with the bolt, and coöperating means on said safety for actuating said detent into locking engagement with said bolt in one of its positions of adjustment.

9. In a gun of the bolt action type, the combination with the bolt, the sleeve and the firing pin, of a safety in the form of a transversely movable bar mounted in said sleeve, the under side of said safety having a tooth portion and a cut away portion, the former

CONFIDENTIAL-SUBJECT TO PROTECTIVE ORDER
KINZER V. REMINGTON
R2539444

for locking the firing pin and the latter to provide clearance for said firing pin, a detent coöperating with said safety for yieldably holding the same in a plurality of positions of adjustment, said safety being fashioned to react upon said detent to adjust the same into different positions, one of said positions of the detent being in locking engagement with said bolt.

10. In a gun of the bolt action type, the combination with the bolt, the sleeve and firing pin, of a safety in the form of a transversely extending pin engaging an aperture in said sleeve, a detent engaging a longitudinal aperture in said sleeve having one end operatively engaging said safety and the opposite end engageable with the breech bolt to lock the same, and a bearing on said safety for said detent cammed to actuate the detent into locking engagement with the bolt in one position of adjustment of the safety and to release the locking of the bolt in another position of the safety.

11. In a gun of the bolt action type, the combination with the bolt, the sleeve and firing pin, of a safety in the form of a transversely extending bar engaging a transverse aperture in the sleeve and having three positions of adjustment, a tooth on said safety for engaging the firing pin in two of said positions of adjustment, the safety being cut away to release said pin in the third position of adjustment, a detent for yieldably holding said safety in its different positions of adjustment and having its opposite end operable into locking engagement with the bolt, and a cammed surface on said safety for engaging said detent to hold the same in locking engagement with the bolt in one position of the safety where the firing pin is also locked, to release said bolt in another position where the firing pin is also released, and to release the bolt in an intermediate position where the firing pin is locked.

In testimony whereof I affix my signature.

FRANK A. WILLIAMS.

Copies of this patent may be obtained for five cents each, by addressing the "Commissioner of Patents, Washington, D. C."

CONFIDENTIAL-SUBJECT TO PROTECTIVE ORDER
KINZER V. REMINGTON
R2539445

"C" Series Photos

Bolt lock is mounted, as in "B" Series, independently of safety.

C-1 Gun cocked - ready to fire
Safe in "Fire" posotion
Bolt unlocked

C-2 Gun cocked
Safe in "ON SAFE" position
Bolt locked

C-3 Gun cocked
Safe in "ON SAFE" position but is pulled rearward to unlock bolt

F.E. Martin:T
4-11-78

CONFIDENTIAL-SUBJECT TO PROTECTIVE ORDER
KINZER V. REMINGTON

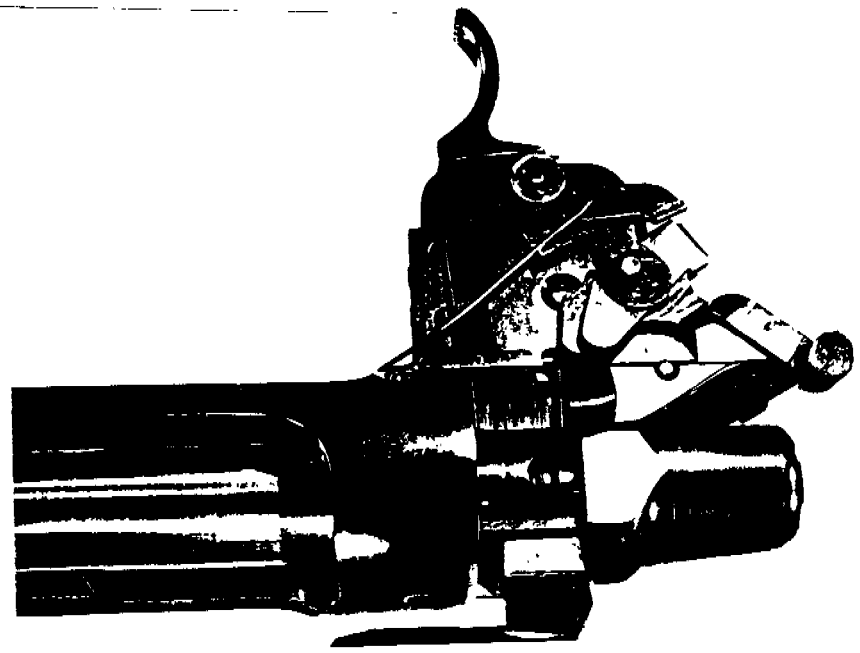

W

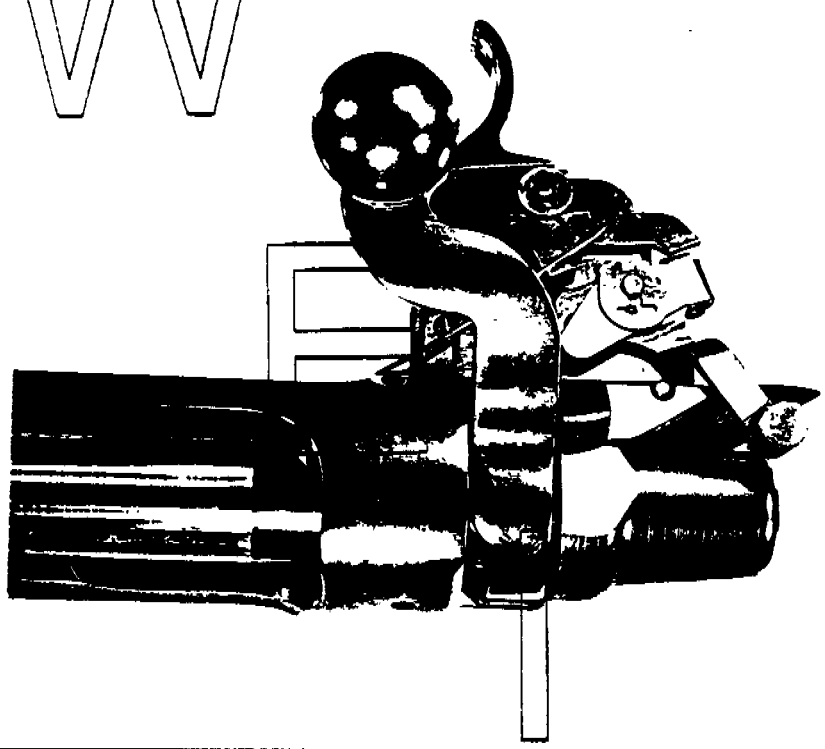

G

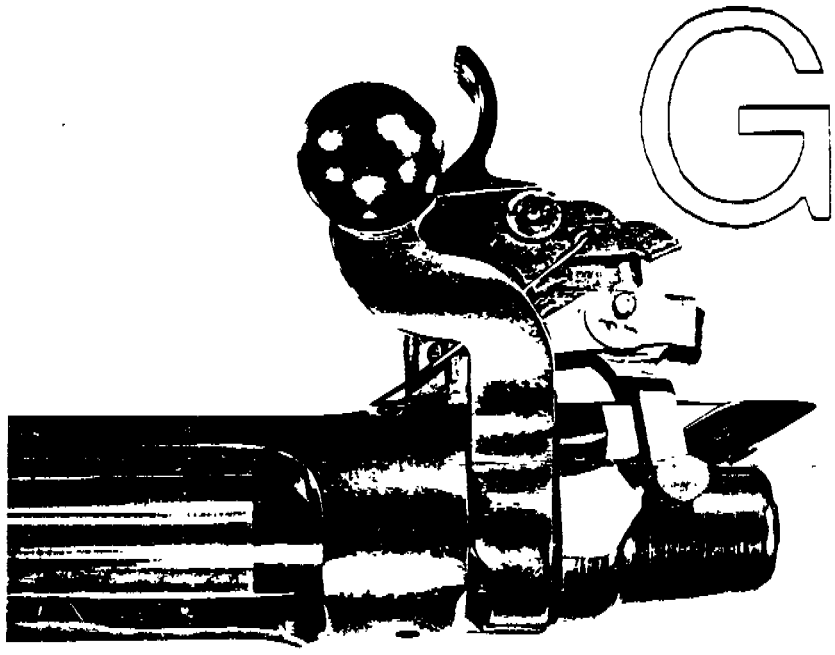

E

L

CONFIDENTIAL-SUBJECT TO PROTECTIVE ORDER
KINZER V. REMINGTON

cc: C. B. Workman
(no attachments)

RD-69 REV. 6-58

REMINGTON ARMS COMPANY, INC.

INTER-DEPARTMENTAL CORRESPONDENCE

Remington DUPONT

BRIDGEPORT, CONN.
SEPTEMBER 14, 1978

TO: J. W. BROOKS

FROM: W. L. ERICSON

SUBJECT: THREE-POSITION SAFETY: RELEASABLE BOLT LOCK

An extensive search has been made for patents relevant to the prototype three-position safety shown in the "C" series photos you supplied us (stamped April 3, 1978 by your Photo Lab). No patents which could raise any infringement risks were found. The following are of interest with respect to the patentability of this design:

1,318,423 - Williams
2,824,402 - Fischer
2,869,269 - Couture
3,138,888 - Brewer

The Williams, Fischer, Couture and Brewer patents show various forms of three-position safeties having alternate "safe" positions in which the bolt is locked and released. However, it appears to me that none of these is so closely related to your prototype as to foreclose us from obtaining patent protection for it, in the event it is selected for use.

Williams uses a safety bar N which is slidable transversely of the bolt C, and has ribs O that interfere with ribs P on the firing pin F in two "safe" positions, but are cut away at Q to define a "fire" position. In one of the safe positions, the bolt C and its handle D are locked by the projection into a recess U of a spring-loaded detent S (see Fig. 9); but this detent retracts into a notch T_2 in the safety bar in its remaining two positions.

Fischer has a bolt lock button 12, 13 engageable with a notch 14 in the bolt 2 of a Mauser action (Fig. 4); this button carries an interlock pin 26 which is engaged by a safety lever 23 in its "fire" position 23A, to unlock the bolt. In an intermediate "safe" position 23B, the firing pin 4 is locked by a safety pin 19 (see Fig. 5), and the button 13 can be manually operated to either lock or unlock the bolt. In a second "safe" position, shown in solid line at 23 in Fig. 4, the button 13 is held in the locking position by a notch 28.

CONFIDENTIAL-SUBJECT TO PROTECTIVE ORDER
KINZER V. REMINGTON

Couture bears some resemblance to our Walker Patent 2,514,981 in that a bell crank lever 28 serves both as a safety and a bolt lock. However, Couture provides for three safety positions rather than two; these positions are determined by a spring-loaded lug 60 engageable in any of three recesses, shown unnumbered in Fig. 2. The safety has a stop member 54 which locks the trigger in either a rear or an intermediate position, and a longer arm 55 which engages a notch 57 in the bolt only in the rear position. (This mode of operation is the reverse of your prototype).

Brewer employs a sliding safety 190 that has a screw 228 which locks the trigger, and a lug 230 which engages a locking notch 234 in the bolt, in the rearmost safety position shown in Fig. 12. Forward movement to an intermediate position keeps the trigger locked, but disengages the lug 230 from the bolt notch. Incidentally, there are only two detent notches 229 and 231, which correspond to the rear "double-safe", and "fire" positions: so feeling the intermediate position would appear to be somewhat uncertain.

To summarize, the prior art most nearly related to your design is the Couture patent, but this is a one-piece trigger safety and bolt lock that is readily distinguishable both in construction and mode of operation. Patent protection should be obtainable on your prototype.

There is a mention in earlier correspondence of a three-position safety in the Model 725. If you have a sample, we might compare it.

Bill Ericson

W. L. ERICSON
SENIOR PATENT COUNSEL

WLE/dt
Attach.(5)

48.50

CONFIDENTIAL-SUBJECT TO PROTECTIVE ORDER
KINZER V. REMINGTON

R2539449

United States Patent Office

2,824,402

Patented Feb. 25, 1958

1

2,824,402

BREECH ~~BOLT AND FIRING~~ PIN SAFETY MECHANISM ~~FOR~~ FIREARMS

Joseph F. Fischer, Grand Rapids, Mich.

Application June 21, 1956, Serial No. 592,846

14 Claims. (Cl. 42—70)

This invention relates to improvements in safety mechanism for fire arms. The principal objects of this invention are:

First, to provide a novel safety mechanism for rifles of the Mauser type which safety does not interfere with the mounting of a telescopic sight on the rifle and which is mounted for easy operation on the bolt handle side of the rifle.

Second, to provide a safety mechanism for Mauser type gun actions which will lock the firing pin in safe position without interfering with or preventing the removal of the bolt from the receiver of the gun.

Third, to provide a safety that locks the firing pin in safe position regardless of the position of the bolt so that the bolt may be opened and closed to inspect the chamber of the gun without removing the safety lock of the mechanism.

Fourth, to provide a firing pin safety lock with an operating member that interlocks with the bolt lock of a Mauser type rifle to hold the bolt in closed, locked position and the firing pin in cocked, locked position as when the gun is double locked for rough handling or transportation through brush or in a saddle scabbard.

Fifth, to provide a bolt and firing pin lock mechanism in which movement of the firing pin lock to firing position automatically moves the bolt lock to unlocked position.

Sixth, to provide a firing pin lock for a Mauser type gun action which is extremely simple and silent in operation and which is relatively inexpensive to incorporate in the bolt assembly either as initial construction or as an attachment to existing guns.

Other objects and advantages of the invention will be apparent from a consideration of the following description and claims. The drawings, of which there is one sheet, illustrate a highly practical form of the safety mechanism.

Fig. 1 is a fragmentary side elevational view of the rear end of the receiver of a Mauser type rifle action with the bolt having the safety mechanism of the invention assembled in the receiver in cocked firing position.

Fig. 2 is an enlarged fragmentary rear elevational view of the receiver and bolt with the safety in first intermediate locked position.

Fig. 3 is a fragmentary transverse cross sectional view through the bolt and safety taken along the plane of the line 3—3 in Fig. 4 with the safety in a first or intermediate locked position corresponding to the position shown in Fig. 2.

Fig. 4 is a fragmentary top plan view of the receiver and bolt partially broken away in horizontal section along the plane of the broken line 4—4 in Fig. 2 and showing

2

the safety in double safe locked position with the bolt locked in the receiver.

Fig. 5 is a fragmentary transverse cross sectional view taken along the plane of the line 5—5 in Fig. 2.

The gun action to which the safety mechanism of the invention is applied is the familiar type of Mauser rifle which is well known so no attempt will be made to disclose or describe in detail the construction of the gun action except as it cooperates with the safety mechanism of the invention. The action includes generally a receiver 1 in which the bolt 2 is rotatably and reciprocably mounted for loading and cocking the gun action. The bolt includes the familiar bolt handle 3 that projects rigidly from the right side of the action for rotating the bolt in the receiver to unlock the bolt and cam it rearwardly. Reciprocably mounted within the bolt 2 is a firing pin 4 that is spring pressed forwardly to fire the gun in the well known manner. The rear end of the firing pin 4 carries a depending rib 5 with a notch therein that is engaged by the sear 6 of the trigger mechanism to control the firing of the gun. The rear end of the firing pin 4 is slidably and non-rotatably received in the bolt sleeve 7 which embraces the rear end of the tubular bolt and within which the bolt rotates to effect cocking of the firing pin. The bolt sleeve 7 has a flatted undersurface 8 that non-rotatably engages the rear end of the receiver in the well known manner.

As is standard in Mauser type gun actions the rear end of the firing pin 4 is annularly grooved as at 9 within the bolt sleeve 7 to provide a safety lock shoulder 10. The upper portion of the bolt sleeve 7 is axially bored as at 11 to receive the bolt lock pin. The standard Mauser bolt lock pin is rotated by a lever on its rear end but in this lock assembly a new bolt lock pin 12 is substituted. The pin 12 is reciprocable in the sleeve and projects to the bolt lock button 13 on the rear end of the sleeve. The rear end of the bolt 2 as currently and previously manufactured already has a peripheral notch 14 cut therein. In the standard Mauser this notch coacts with the rotary bolt lock pin but in this assembly it registers with the bolt lock pin 12 when the bolt is in closed locked position in the receiver. By pressing forwardly on the bolt lock button 13 the pin 12 enters the notch 14 and prevents rotation of the bolt in the receiver and therefore prevents removal of the bolt or cocking of the firing pin. A lock screw 15 prevents rotation of the bolt lock pin 12.

The bolt lock pin ~~12 cannot~~ control the trigger action or the firing pin and it is possible to fire the gun with the bolt locked unless there is other safety mechanism provided. For this purpose the present invention provides a small solid block ~~of metal 16 that~~ is secured as by the silver solder indicated at 17 along the right side of the bolt sleeve 7. The block 16 and the adjacent portion of the bolt sleeve are transversely bored as at 18 to receive the short safety pin 19 having a rounded inner end projected into the path of the locking shoulder 10 on the firing pin 4 when the firing pin is cocked. In order to selectively control the position of the safety pin 19 the block 16 is vertically bored as at 20 to receive the operating shaft 21 in intersecting relation to the bore 18. The shaft 21 has a cutaway portion 22 forming a broad flat area which when registered with the outer end of the safety pin permits the complete retraction of the safety pin from the firing pin 4 and permits firing of the rifle.

CONFIDENTIAL-SUBJECT TO PROTECTIVE ORDER
KINZER V. REMINGTON

R2539450

This position of the shaft 21 is the unlocked position of the shaft and the gun action and corresponds to the dotted position 23A of the safety shaft shown in Fig. 4. In order to conveniently rotate the shaft 22 it is provided on its upper end with the arm 23 extending laterally to a depending finger piece 24 that swings along the side of the block 16. The shaft 21 is further provided with a shallow flatted surface 25 which when registered with the safety pin 19 presses the safety pin into the intermediate safe position shown in Fig. 5 in which the firing pin can not be released by the trigger and in which the gun action is in safe condition. The intermediate safe position of the safety and the actuating arm 23 corresponds to the dotted position 23B appearing in Fig. 4. The shallow flat 25 not only locks the safety pin 19 but forms a detent surface that is readily felt in the finger pass 24 as the safety mechanism is rotated to intermediate safe position. The marksman is thus advised that the finger piece has been moved fully from firing position 23A to safe position 23B or vice versa.

In order to interlock the firing pin safety lock with the bolt lock of the action the bolt lock button 13 is provided with a laterally and downwardly inclined interlock pin 26 that projects into the plane of the operating arm 23 of the safety mechanism. The inner end of the operating arm 23 is provided with a concentric arcuate portion 27 that intercepts and prevents forward locking motion of the bolt locking pin 12 and the interlocking pin 26 when the safety mechanism is in off or firing position. The actuating arm 23 is provided with a laterally opening notch 28 that opens to receive the interlock pin 26 when the safety is in intermediate safe position corresponding to position 23B in Fig. 4. Thus in the bolt closed cocked position of the gun action the safety can be moved to intermediate safe position and the bolt lock member advanced to lock the bolt. In order to further lock the gun action for rough handling or transporting through brush or in a scabbard, the actuating arm 23 and the finger piece 24 can be rotated to a full rearwardly directed position as shown in full lines in Fig. 4 in which case the rear end of the notch 28 will engage and prevent accidental retraction of the bolt lock pin 12. This is the full or double locked position of the safety mechanism. In this full locked position of the safety the rounded portion 29 of the shaft 21 appearing in Fig. 5 engages the outer end of the safety pin 19.

It is pointed out that the action of the actuating arm 23 in moving from either of the locked positions to firing position automatically disengages the bolt lock pin 12 because the forward end of the notch 28 cams the interlock pin 26 rearwardly to unlock the bolt as the safety is moved to unlocked firing position. The finger piece 24 of the safety actuating member is conveniently located along side of the bolt sleeve near the bolt operating handle 23 and the trigger mechanism where it can be operated by the thumb of either right or left handed marksmen. The camming action of the flatted surfaces on the shaft 21 provides positive locking movement of the safety pin 19 with a minimum of effort on the part of the marksman. The position of the safety mechanism in all of its adjusted positions is below the top of the bolt sleeve so as not to interfere with any auxiliary sights mounted on the gun action. The position of the safety mechanism also balances the appearance of the bolt sleeve by occupying the area opposite the housing for the spring 30 that presses the locking pin 31 of the bolt sleeve forwardly into engagement with the rear end of the bolt to non-rotatably lock the sleeve to the bolt as is familiar in the Mauser type of bolt. The safety operating shaft 21 is retained in the block 16 by a lock screw 32 threaded through the rear of the block into the groove 33 in the lower end of the shaft.

Having thus described the invention, what is claimed as new and is desired to be secured by Letters Patent is:

1. A safety mechanism for a fire arm of the Mauser type having a bolt slidably and rotatably mounted in a receiver and a firing pin reciprocably mounted within the bolt with a bolt sleeve positioned around the rear of the bolt and non-rotatably engaged with the receiver, said safety mechanism comprising a block fixedly secured as an attachment to the side of said bolt sleeve, a safety locking pin extending through the side of said sleeve and having its outer end received in a transverse bore in said block, an upright bore in said block intersecting said transverse bore, a shaft journaled in said upright bore and engageable with the outer end of said pin, a retaining screw threaded in said block and engaged in a groove in said shaft, said shaft having a cutaway portion permitting retraction of said safety pin from the inside of said sleeve and a flatted portion engageable with the end of said pin in the intermediate safe position of said shaft to project said safety pin into said sleeve, said firing pin having a safety groove the end of which is engaged with said safety pin in the safe position of the pins, an arm secured to the top of said shaft and projecting laterally to a downturned finger piece at the side of said block, said bolt having a notch in the periphery of its rear end located within said sleeve, a bolt lock pin reciprocally and non-rotatably mounted in said sleeve and projecting from the rear end of the sleeve, said bolt lock pin being receivable in said notch in the locked position of said bolt, and an interlock pin projecting from the rear end of said bolt lock pin into the path of the arm on said shaft, said arm having a rounded inner end cammingly engageable with said interlock pin to retract said bolt lock pin when said arm and said finger piece are moved forwardly to register the cutaway portion on said shaft with said safety pin to condition the mechanism for firing, said arm having a notch adjacent said rounded end receiving said interlock pin when said arm and finger piece are rotated rearwardly to prevent retraction of said bolt locking pin from bolt locking position when said shaft is in a double safe position rotated rearwardly from said intermediate safe position with a rounded portion of its surface engaged with the outer end of said safety pin and holding it in locking engagement with said firing pin.

2. A safety mechanism for a fire arm of the Mauser type having a bolt slidably and rotatably mounted in a receiver and a firing pin reciprocably mounted within the bolt with a bolt sleeve positioned around the rear of the bolt and non-rotatably engaged with the receiver, said safety mechanism comprising a block fixedly secured to the side of said bolt sleeve, a safety locking pin extending through the side of said sleeve and having its outer end received in a transverse bore in said block, an upright bore in said block intersecting said transverse bore, a shaft journaled in said upright bore and engageable with the outer end of said pin, said shaft having a cutaway portion permitting retraction of said safety pin from the inside of said sleeve and a flatted portion engageable with the end of said pin in the intermediate safe position of said shaft to project said safety pin into said sleeve, said firing pin having a safety groove the end of which is engaged with said safety pin in the safe position of the pins, an arm secured to the top of said shaft and projecting laterally to a finger piece at the side of said block, said bolt having a notch in the periphery of its rear end located within said sleeve, a bolt lock pin reciprocally and non-rotatably mounted in said sleeve and projecting from the rear end of the sleeve, said bolt lock pin being receivable in said notch in the locked position of said bolt, and an interlock pin projecting from the rear end of said bolt lock pin into the path of the arm on said shaft, said arm having an inner end cammingly engageable with said interlock pin to retract said bolt lock pin when said arm and said finger piece are moved forwardly to register the cutaway portion on said shaft with said safety pin to condition the mechanism for firing, said arm having a notch adjacent said end receiving said interlock pin when said arm and finger piece

CONFIDENTIAL-SUBJECT TO PROTECTIVE ORDER
KINZER V. REMINGTON

are rotated rearwardly to prevent retraction of said bolt locking pin from bolt locking position when said shaft is in a double safe position rotated rearwardly from said intermediate safe position with a portion of its surface engaged with the outer end of said safety pin and holding it in locking engagement with said firing pin.

3. A safety mechanism for a fire arm of the Mauser type having a bolt slidably and rotatably mounted in a receiver and a firing pin reciprocably mounted within the bolt with a bolt sleeve positioned around the rear of the bolt and non-rotatably engaged with the receiver, said safety mechanism comprising a block on the side of said bolt sleeve, a safety locking pin extending through the side of said sleeve and having its outer end received in a transverse bore in said block, an upright bore in said block intersecting ~~said transverse~~ bore, a shaft journaled in said upright ~~bore and engage~~able with the outer end of said safety pin, said shaft having a cutaway portion permitting retraction of said pin from the inside of said sleeve and a flatted portion engageable with the end of said safety pin in the safe position of said shaft to project said pin into said sleeve, said firing pin having a safety groove the end of which is engaged with said safety pin in the safe position of the pins, an arm secured to the top of said shaft and projecting laterally to a finger piece at the side of said block, said bolt having a notch in the periphery of its rear end located within said sleeve, a bolt lock pin reciprocally and non-rotatably mounted in said sleeve and projecting from the rear end of the sleeve, said bolt lock pin being receivable in said notch in the locked position of said bolt, and an interlock pin projecting from the rear end of said bolt lock pin into the path of the arm on said shaft, said arm having a notch therein receiving said interlock pin when said arm and finger piece are rotated rearwardly to prevent retraction of said bolt locking pin from bolt locking position when said shaft is in double safe position with a portion of its surface engaged with the outer end of said safety pin and holding said safety pin in firing pin locking position.

4. A safety mechanism for a fire arm of the Mauser type having a bolt slidably and rotatably mounted in a receiver and a firing pin reciprocably mounted within the bolt with a bolt sleeve positioned around the rear of the bolt and non-rotatably engaged with the receiver, said safety mechanism comprising a block on the side of said bolt sleeve, a safety locking pin extending through the side of said sleeve and having its outer end received in a transverse bore in said block, an upright bore in said block intersecting said transverse bore, a shaft journaled in said upright bore and engageable with the outer end of said safety pin, said shaft having a cutaway portion permitting retraction of said safety pin from the inside of said sleeve and a portion engageable with the end of said pin in the safe position of said shaft to project said pin into said sleeve, said firing pin having a safety groove the end of which is engaged with said safety pin in the safe position of the pins, an arm secured to the end of said shaft and projecting laterally to a finger piece at the side of said block, said bolt having a notch in the periphery of its rear end located within said sleeve, a bolt lock pin reciprocally and non-rotatably mounted in said sleeve and projecting from the rear end of the sleeve, said bolt lock pin being receivable in said notch in the locked position of said bolt, and an interlock pin projecting from the rear end of said bolt lock pin into the path of the arm on said shaft, said arm having a notch therein receiving said interlock pin when said arm and finger piece are rotated rearwardly to prevent retraction of said bolt locking pin from bolt locking position when said shaft is in double safe position with a portion of its surface engaged with the outer end of said safety pin and holding said safety pin in firing pin locking position.

5. A safety mechanism for a fire arm of the Mauser type having a bolt slidably and rotatably mounted within the bolt with a bolt sleeve positioned around the rear of the bolt and firing pin and non-rotatably engaged with the receiver, said safety mechanism comprising a safety locking pin extending through the side of said sleeve and having its outer end received in a transverse bore in said sleeve, an upright bore intersecting said transverse bore, a shaft journaled in said upright bore and engageable with the outer end of said safety pin, said shaft having a cutaway portion permitting retraction of said safety pin from the inside of said sleeve and a flatted portion engageable with the end of said pin in the safe position of said shaft to project said pin into said sleeve, said firing pin having a safety groove the end of which is engaged with said safety pin in the safe position of the pins, an arm secured to said shaft and projecting laterally to a finger piece at the side of said sleeve, a bolt lock in said sleeve and engageable with said bolt in the locked position of said bolt, and an interlock member on said bolt lock extending into the path of the arm on said shaft, said arm having a first portion cammingly engageable with said interlock member to retract said bolt lock when said arm and said finger piece are moved forwardly to register the cutaway portion on said shaft with said safety pin to condition the mechanism for firing, said arm having a second portion locking said interlock in bolt locking position when said arm and finger piece are rotated rearwardly to double safe position with another portion of its surface engaged with the outer end of said safety pin to hold said safety pin in firing pin locking position.

6. A safety mechanism for a fire arm of the Mauser type having a bolt slidably and rotatably mounted within the bolt with a bolt sleeve positioned around the rear of the bolt and firing pin and non-rotatably engaged with the receiver, said safety mechanism comprising a safety locking pin extending through the side of said sleeve and having its outer end received in a transverse bore in said sleeve, an upright bore intersecting said transverse bore, a shaft journaled in said upright bore and engageable with the outer end of said safety pin, said shaft having a cutaway portion permitting retraction of said safety pin from the inside of said sleeve and a portion engageable with the end of said pin in the safe position of said shaft to project said pin into said sleeve, said firing pin having a safety groove the end of which is engaged ~~with said~~ safety pin in the safe position of the pins, an ~~arm secured~~ to said shaft and projecting laterally to a finger piece at the side of said sleeve, a bolt lock in said sleeve and engageable with said bolt in the locked position ~~of said bolt~~, and an interlock member on said bolt lock ~~extending~~ into the path of the arm on said shaft, said arm having a first portion cammingly engageable with said interlock member to retract said bolt lock when said arm and said finger piece are moved to register the cutaway portion on said shaft with said safety pin to condition the mechanism for firing, ~~said arm~~ having a second portion locking said interlock ~~in bolt~~ locking position when said arm and finger piece are rotated to safe position with another portion of its surface engaged with the outer end of said safety pin to hold said safety pin in firing pin locking position.

7. In a fire arm having a bolt rotatable between locked firing position and unlocked retractable position and a firing pin reciprocable in said bolt and spring pressed forwardly to firing position, safety mechanism comprising a sleeve non-rotatably mounted on said fire arm around the rear of said bolt and said firing pin, a safety pin mounted in said sleeve in transversely extending relation to said firing pin and projectable into engagement with a shoulder on said firing pin in the safe positions of the pins, an actuating shaft rotatably mounted in said sleeve in transversely extending intersecting relation to the path of said safety pin and in transversely extending off-set relation to the axis of said bolt, said shaft having a first portion cut away to permit retraction of said safety pin to firing position and a second intermediate flatted portion engageable in an intermediate rotated safe position with

CONFIDENTIAL-SUBJECT TO PROTECTIVE ORDER
KINZER V. REMINGTON

R2539452

the outer end of said safety pin to advance the safety pin into safe position, said shaft having a third rounded portion engageable with said safety pin in a further rotated double safe position of the shaft to hold said safety pin in safe position, and a finger piece on said shaft to rotate the same, said fire arm having a bolt lock member interlocked with said finger piece on said shaft in the locked position of said bolt lock and the double safe position of the shaft and said finger piece, said finger piece having a portion cammingly engageable with said bolt lock to move the bolt lock to unlocked position upon rotation of the finger piece to safe position.

8. In a fire arm having a bolt rotatable between locked firing position and unlocked retractable position and a firing pin reciprocable in said bolt and spring pressed forwardly to firing position, safety mechanism comprising a sleeve non-rotatably mounted on said fire arm around the rear of said bolt and said firing pin, a safety pin mounted in said sleeve and projectable into engagement with a shoulder on said firing pin in the safe positions of the pins, an actuating shaft rotatably mounted in said sleeve in intersecting relation to the path of said safety pin and in transversely extending off-set relation to the axis of said bolt, said shaft having a first portion cut away to permit retraction of said safety pin to firing position and a second intermediate flatted portion enggaeable in an intermediate rotated safe position with the outer end of said safety pin to advance the safety pin into safe position, said shaft having a third portion engageable with said safety pin in a further rotated double safe position of the shaft to hold said safety pin in safe position, and a finger piece on said shaft to rotate the same, said fire arm having a bolt lock member interlocked with said shaft in the locked position of said bolt lock and the double safe position of the shaft and said finger piece.

9. In a fire arm having a bolt rotatable between locked firing position and unlocked retractable position and a firing pin reciprocable in said bolt and spring pressed forwardly to firing position, safety mechanism comprising a sleeve non-rotatably mounted on said fire arm around the rear of said bolt and said firing pin, a safety pin mounted in said sleeve in transversely extending relation to said firing pin and projectable into engagement with a shoulder on said firing pin in the safe positions of the pins, an actuating shaft rotatably mounted in said sleeve in transversely extending intersecting relation to the path of said safety pin and in off-set relation to the axis of said bolt, said shaft having a first portion cut away to permit retraction of said safety pin to firing position and a second portion engageable in a rotated safe position with the outer end of said safety pin to advance the safety pin into safe position, and a finger piece on said shaft to rotate the same, said fire arm having a bolt lock member, said bolt lock member being blocked from engagement with said bolt by said finger piece on said shaft in the firing position of the shaft and said finger piece, said finger piece having a portion cammingly engageable with said bolt lock to move the bolt lock to unlocked position upon rotation of the finger piece to firing position.

10. In a fire arm having a bolt rotatable between locked firing position and unlocked retractable position and a firing pin reciprocable in said bolt and spring pressed forwardly to firing position, safety mechanism comprising a sleeve non-rotatably mounted on said fire arm around the rear of said bolt and said firing pin, a safety pin mounted in said sleeve in transversely extending relation to said firing pin and projectable into engagement with a shoulder on said firing pin in the safe positions of the pins, an actuating shaft rotatably mounted in said sleeve in transversely extending intersecting relation to the path of said safety pin and in off-set relation to the axis of said bolt, said shaft having a first portion cut away to permit retraction of said safety pin to firing position and a second portion engageable in a rotated safe position with the outer end of said safety

pin to advance the safety pin into safe position, and a finger piece on said shaft to rotate the same.

11. In a fire arm having a bolt rotatable between locked firing position and unlocked retractable position and a firing pin reciprocable in said bolt and spring pressed forwardly to firing position, safety mechanism comprising a sleeve non-rotatably mounted on said fire arm around the rear of said bolt and said firing pin, a safety pin mounted in said sleeve in transversely extending relation to said firing pin and projectable into engagement with a shoulder on said firing pin in the safe positions of the pins, an actuating shaft rotatably mounted in said sleeve in transversely extending intersecting relation to the path of said safety pin and in off-set relation to the axis of said bolt, said shaft having a first portion cut away to permit retraction of said safety pin to firing position and a second portion engageable in a rotated safe position with the outer end of said safety pin to advance the safety pin into safe position, and a finger piece on said shaft to rotate the same, said fire arm having a bolt lock member, said bolt lock member being blocked from engagement with said bolt by said shaft in the firing position of the shaft and said finger piece.

12. In a fire arm having a bolt rotatable between locked firing position and unlocked retractable position and a firing pin reciprocable in said bolt and spring pressed forwardly to firing position, safety mechanism comprising a sleeve non-rotatably mounted on said fire arm around the rear of said bolt and said firing pin, a safety pin mounted in said sleeve and projectable into engagement with a shoulder on said firing pin in the safe positions of the pins, an actuating shaft rotatably mounted in said sleeve in transversely extending intersecting relation to the path of said safety pin and in off-set relation to the axis of said bolt, said shaft having a first radially recessed portion to permit retraction of said safety pin to firing position and a second intermediate flatted portion engageable in an intermediate rotated safe position with the outer end of said safety pin to advance the safety pin into safe position, said shaft having a third portion engageable with said safety pin in a further rotated double safe position of the shaft to hold said safety pin in safe position, and a finger piece on said shaft to rotate the same.

13. A safety attachment for a fire arm of the Mauser type having a bolt slidably and rotatably mounted in a receiver and a firing pin reciprocably mounted within the bolt with a bolt sleeve positioned along the rear of the bolt and non-rotatably engaged with the receiver, said safety attachment comprising a block adapted to be fixedly secured to the side of said bolt sleeve, a safety locking pin adapted to extend through the side of said sleeve and having its outer end received in a transverse bore in said block, an upright bore in said block intersecting said transverse bore, a shaft journaled in said upright bore and engageable with the outer end of said safety pin, a retaining screw threaded in said block and engaged in a groove in said shaft, said shaft having a radially recessed portion permitting retraction of said safety pin from the inside of said sleeve and a flatted portion and further rotated double lock portion engageable with the end of said safety pin in the safe position of said shaft to project said safety pin into said sleeve, said firing pin having a safety groove the end of which is engaged with said safety pin in the safe position of the pins, and an arm secured to the top of said shaft and projecting laterally to a downturned finger piece at the side of said block.

14. A safety attachment for a fire arm of the Mauser type having a bolt slidably and rotatably mounted in a receiver and a firing pin reciprocably mounted within the bolt with a bolt sleeve positioned along the rear of the bolt and non-rotatably engaged with the receiver, said safety attachment comprising a block adapted to be

CONFIDENTIAL-SUBJECT TO PROTECTIVE ORDER
KINZER V. REMINGTON

R2539453

fixedly secured to the side of said bolt sleeve, a safety locking pin adapted to extend through the side of said sleeve and having its outer end received in a transverse bore in said block, an upright bore in said block intersecting said transverse bore, a shaft journaled in said upright bore and engageable with the outer end of said safety pin, said shaft having a radially recessed portion permitting retraction of said safety pin from the inside of said sleeve and an intermediate portion and further rotated double lock portion engageable with the end of said safety pin in the safe position of said shaft to project said safety pin into said sleeve, said firing pin

having a safety groove the end of which is engaged with said safety pin in the safe position of the pins, and an arm secured to said shaft and projecting laterally to a finger piece at the side of said block.

References Cited in the file of this patent

UNITED STATES PATENTS

2,648,926 Ackerson ..... Aug. 18, 1953

FOREIGN PATENTS

12,619 Great Britain 1913

VEIGEL

CONFIDENTIAL-SUBJECT TO PROTECTIVE ORDER
KINZER V. REMINGTON

R2539454

CLASS 42 SUB 70

Inc F

SEE FIGS. 12-15

W

June 30, 1964 N. L. BREWER 3,138,888

TRIGGER SAFETY FOR BOLT ACTION RIFLE

Original Filed Nov. 20, 1958 3 Sheets-Sheet 1

3-POSITION SAFETY. (see Col. 9)

Fig. 1.

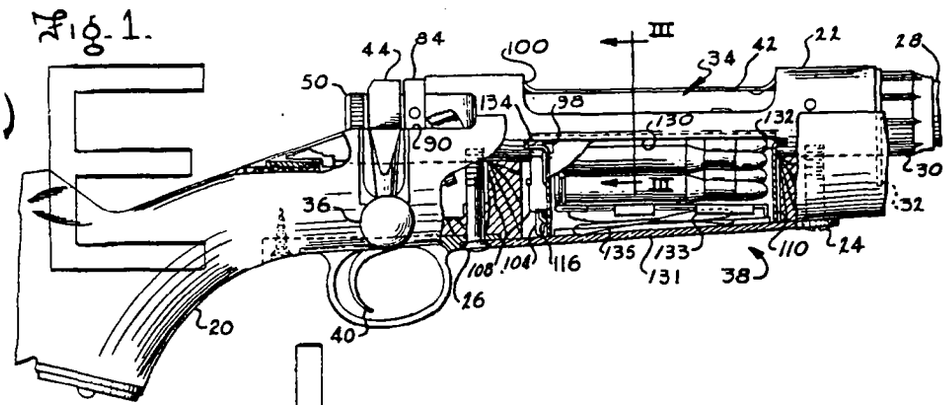

Fig. 2.

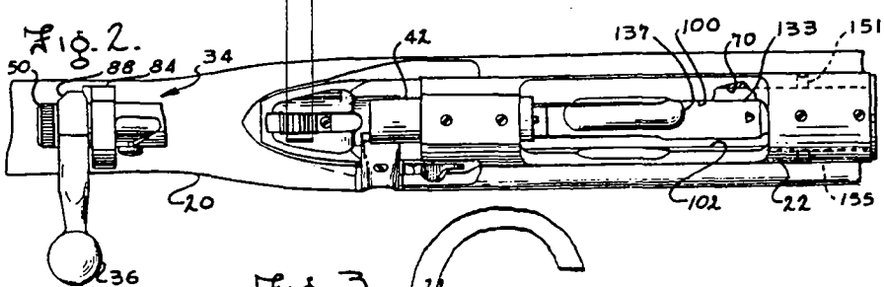

Fig. 3.

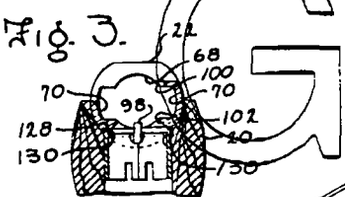

Fig. 4.

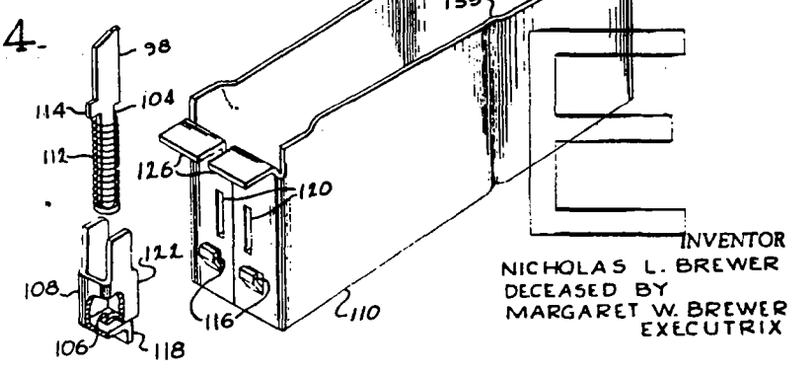

INVENTOR
NICHOLAS L. BREWER
DECEASED BY
MARGARET W. BREWER
EXECUTRIX

L

CONFIDENTIAL-SUBJECT TO PROTECTIVE ORDER
KINZER V. REMINGTON

June 30, 1964 N. L. BREWER 3,138,888

TRIGGER SAFETY FOR BOLT ACTION RIFLE

Original Filed Nov. 20, 1958 3 Sheets-Sheet 2

Fig. 6.

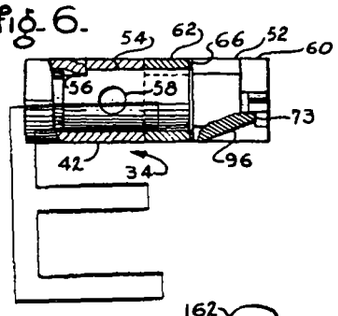

Fig. 5.

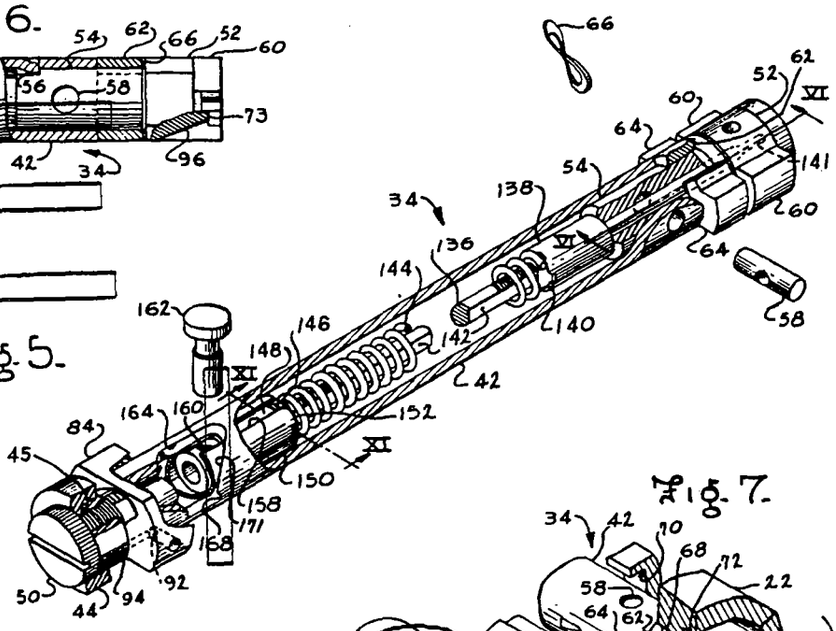

Fig. 7.

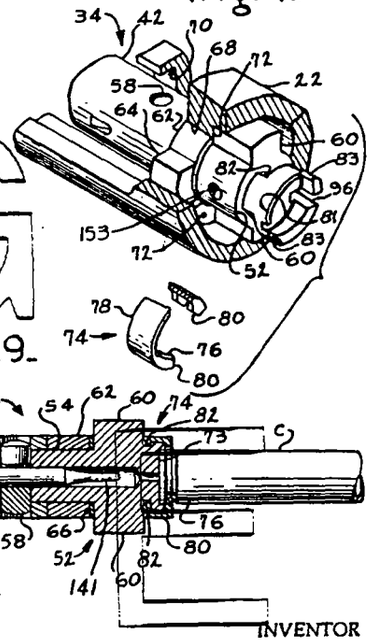

Fig. 8.

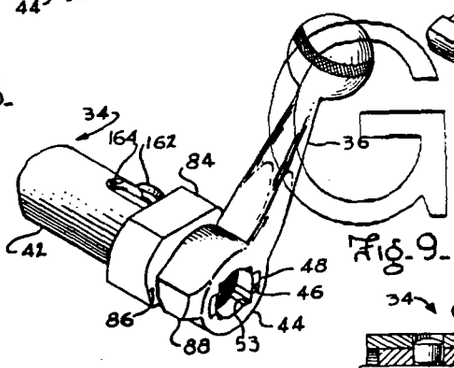

Fig. 9.

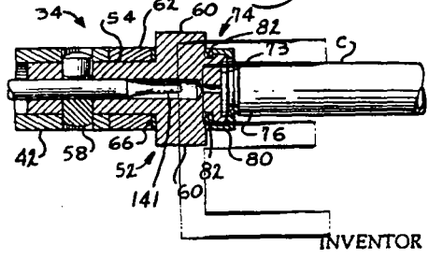

Fig. 10.

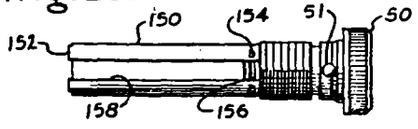

Fig. 11.

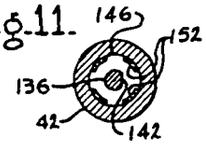

INVENTOR
NICHOLAS L. BREWER
DECEASED BY
MARGARET W. BREWER
EXECUTRIX

BY

ATTORNEY

CONFIDENTIAL-SUBJECT TO PROTECTIVE ORDER
KINZER V. REMINGTON

R2539456

June 30, 1964 N. L. BREWER 3,138,888

TRIGGER SAFETY FOR BOLT ACTION RIFLE

Original Filed Nov. 20, 1958 3 Sheets-Sheet 3

Fig. 12.

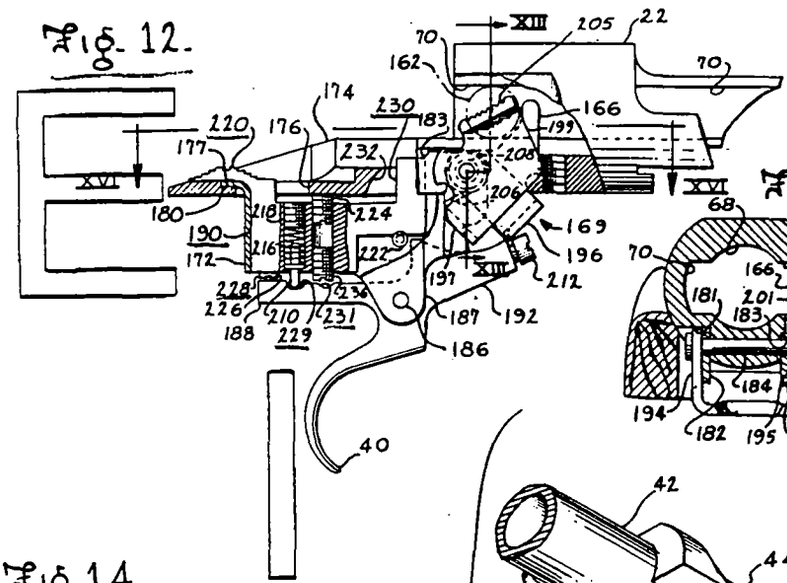

Fig. 13.

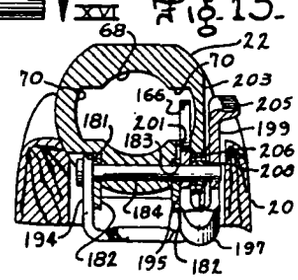

Fig. 14.

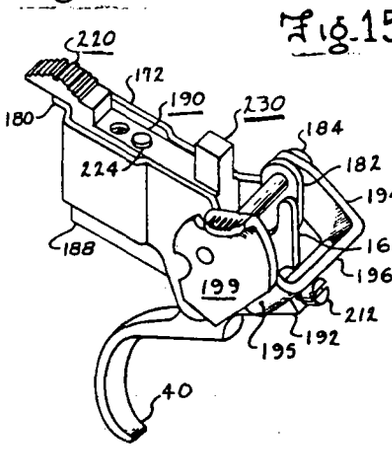

Fig. 15.

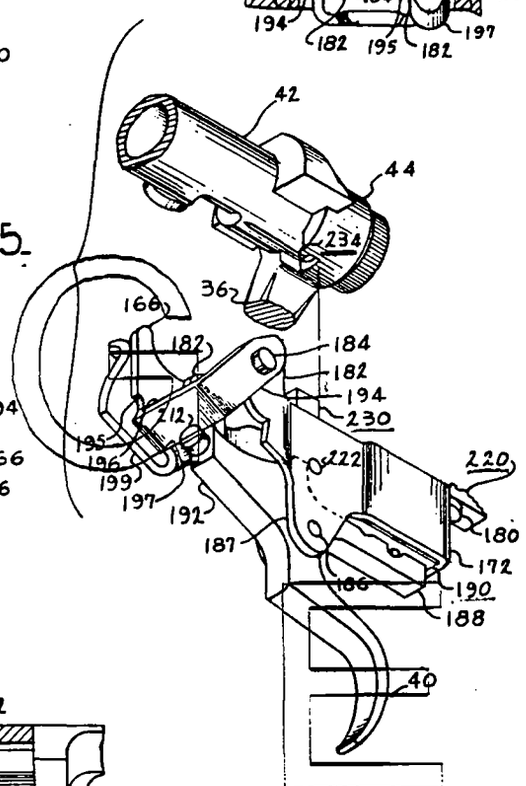

Fig. 16.

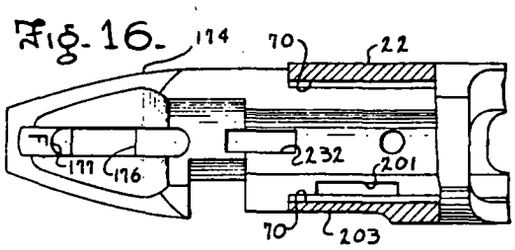

INVENTOR
NICHOLAS L. BREWER
DECEASED BY
MARGARET W. BREWER
EXECUTRIX

BY

ATTORNEY

CONFIDENTIAL-SUBJECT TO PROTECTIVE ORDER
KINZER V. REMINGTON

United States Patent Office

3,138,888

Patented June 30, 1964

1

3,138,888

TRIGGER SAFETY FOR BOLT ACTION RIFLE

Nicholas L. Brewer, deceased, late of Tarpon Springs, Fla., by Margaret W. Brewer, executrix, Tarpon Springs, Fla., assignor, by mesne assignments, to The American Hardware Corporation, a corporation of Connecticut

Original application Nov. 20, 1958, Ser. No. 775,143, now Patent No. 3,005,279, dated Oct. 24, 1961. Divided and this application May 12, 1961, Ser. No. 120,822

9 Claims. (Cl. 42—70)

The present ~~invention relates~~ to improvements in small arms, such as rifles ~~or the like,~~ and in certain aspects finds particular utility in bolt action rifles.

This is a divisional application of applicant's copending application Serial No. 775,143, filed November 20, 1958, now Patent No. 3,005,279, and assigned to Savage Arms Corporation.

The principal object of this invention is to provide improved safety mechanism for firearms, such as bolt action rifles and the like.

These and related objects of the invention including the novel features by which such ends are obtained will be apparent from the following description of the disclosure found in the accompanying drawings and the particular novelty thereof pointed out in the appended claims.

In the drawings:

FIG. 1 is a side elevation of a receiver and associated parts embodying the present invention with certain portions thereof broken away and with the action closed;

FIG. 2 is a plan view of the elements seen in FIG. 1 with the action open;

FIG. 3 is a fragmentary section taken on line III—III of FIG. 1, with the bolt removed from the receiver and with the shells removed from the magazine;

FIG. 4 is an exploded perspective view, on an enlarged scale, of the magazine and ejector assembly seen in FIG. 1;

FIG. 5 is a partially exploded perspective view on an enlarged scale and with portions in section, of the bolt seen in FIG. 1;

FIG. 6 is a section taken on line VI—VI in FIG. 5;

FIG. 7 is a perspective view on a different angle showing the front end of the bolt seen in FIG. 5 and illustrating its relation to the receiver which is shown partially in section and with its extractor in exploded relation;

FIG. 8 is a perspective view, with certain parts removed, showing a different angle of the rear end of the bolt seen in FIG. 5;

FIG. 9 is a longitudinal section showing the front end of the bolt as it would be locked up in the breech preparatory to firing the illustrated cartridge;

FIG. 10 is a plan view of certain component parts seen in FIG. 5;

FIG. 11 is a section taken on line XI—XI in FIG. 5;

FIG. 12 is an elevation on an enlarged scale and with certain portions being shown in longitudinal section, of the firing mechanism indicated in FIG. 1;

FIG. 13 is a section taken on line XIII—XIII in FIG. 12;

FIG. 14 is a perspective view of the mechanism seen in FIG. 12 detached from the receiver;

FIG. 15 is a perspective view on a different angle of the mechanism shown in FIG. 12 showing an operative relationship with the bolt; and

FIG. 16 is a section taken on line XVI—XVI in FIG. 12 showing only the receiver and its tang.

The present invention includes certain aspects which are related to bolt action rifles as well as other novel features having broader utility in the field of small arms as will be apparent to those skilled in the art. FIGS. 1 and 2 illustrate the relationship of the various components of a bolt action rifle embodying these inventive features.

2

Thus a rifle stock **20** is grooved to receive the lower portion of a receiver **22** and secured thereto by screws **24**, **26** threaded into the receiver. The rifle barrel briefly indicated at **28** is threaded onto the forward end of the receiver with a lock nut **30** clamping a recoil plate **32** against the front face of the receiver **22**. The recoil plate **32** may be received in a transverse slot formed in the rifle stock **20** so that, if desired, the barrel **28** may be otherwise dissociated from the rifle stock to give a free floating barrel mounting yielding greater accuracy.

A bolt **34** is slidably and rotatably mounted in the receiver **22** and may be operated by a handle **36** to carry out the functions normally associated with bolt action rifles. Thus the handle **36** may be raised from the position seen in FIG. 1 to rotate the bolt **34**, and cock the firing pin. It may then be retracted (FIG. 2) to withdraw an expended cartridge shell from the firing chamber to automatically eject the shell and then moved forwardly to feed a fresh cartridge from a magazine **38** into the chamber. When the handle **36** is again moved to its lower position, the bolt is locked in the breech of the rifle with the firing pin cocked in position to be released by the trigger **40**. The above brief description is provided primarily to give an over-all picture of the rifle in which the present invention is embodied and the various components thereof, as well as its detailed mode of operation, will now be described in detail.

The bolt **34** best seen in FIGS. 5 through 10, and particularly in FIG. 5, comprises an elongated tubular body **42**. The bolt handle **36** is provided with a hub **44** (FIGS. 5 and 8) having an inturned flange **45** which seats on the rear end of the tubular body **42**. The hub **44** is slotted at **46** to receive diametrically opposed projections **48** extending from the rear end of the tubular body **42**, thereby angularly positioning the handle **36** with respect to the tubular body **42**. A screw **50** is threaded into the rear end of the tubular body **42** to secure the handle **36** in place. Ball detents **51** (FIG. 10) engage grooves **53** in the hub **44** (FIG. 8) to prevent loosening of the screw **50** when the rifle is in use and yet permit easy manual disassembly of the screw **50** without the need for special hand tools.

A bolt head **52** is disposed at the front end of the tubular body **42** and has a reduced diameter **54** (FIGS. 5 and 6) telescopically received within the front end of the tubular body **42**. The bolt head **52** is angularly positioned by a projection **56** struck from the upper surface of the body **42** (FIG. 6) and received by a notch formed on the inner end of the reduced diameter **54**. A locking pin or cross pin **58** secures the bolt head in place on the front end of the body **42**. It will be seen that oppositely extending lock lugs **60** project from the fore portion of the bolt head **52**. A front baffle **62** is rotatably mounted on the reduced diameter **54** between the front end of the body **42** and the lock lugs **60** and further has oppositely extending baffle lugs **64** projecting therefrom, the baffle lugs **64** having the same general cross section as the lock lugs **60**. It will also be noted that a spring friction washer **66** (FIG. 9) is disposed between the front baffle **62** and the bolt head **52** to urge the latter forwardly and thereby maintain the pin **58** in place and also to prevent the free relative rotation between the lugs **64** and the lugs **60**, that is, the lugs **64** will be held from turning out of line with lugs **60** by themselves when outside the receiver.

The bolt **34**, as thus far described, is slidingly received within a bore **68** (FIG. 3) extending lengthwise of the receiver **22**, while horizontally disposed channels **70**, opening outwardly of the bore **68**, slidingly receive the lugs **64** and **66**. The channels **70** terminate (FIG. 7) at the forwardmost position of the lock lugs **60** and the front end of the receiver is counterbored to form locking shoul-

CONFIDENTIAL-SUBJECT TO PROTECTIVE ORDER
KINZER V. REMINGTON

R2539458

ders 72 (FIG. 7) which are angularly disposed to the channels 70. With this arrangement the bolt 34 is locked in the breech by moving the bolt to its forwardmost position and then rotating the handle 36 from upper position to its lower position and thus bringing the lock lugs 60 into engagement with the shoulders 72, thereby locking the bolt. It will also be noted that when the bolt is so rotated the baffle lugs 64 are captured in the channels 70 and their position relative to the receiver remains unchanged. This relationship of lugs 60 and 64 also involves the baffling of gases as in the event of a ruptured cartridge, all as will be later dealt with in greater detail.

After firing a shell, the bolt handle is raised to return the locking lugs 60 into alignment with channels 70 preparatory to retracting the bolt and extracting the expended cartridge casing from the firing chamber. The relationship of the bolt head to the cartridge casing is best appreciated from FIG. 9 wherein it will be seen that the forward end face of the bolt head is counterbored at 73 to receive the grooved end of the cartridge case *c*. An extractor 74 is mounted on the forward end of the bolt head 52 and includes a lip or hook 76 (see also FIG. 7) which engages the conventional groove formed in the grooved end of the casing *c*. More particularly, the extractor comprises a split spring band or clip having a relatively thin annular section 78 (FIG. 7) with grooved retaining lugs 80 at either extremity, the hook 76 extending from one of the retaining lugs 80. The forward end of the bolt head is relieved at 81 (FIG. 7) to receive the annular extractor section 78 with grooves 82 (FIGS. 7 and 9) being provided to receive the rear portions of the retaining lugs 80, thereby positively positioning the extractor 74 relative to the bolt head 52 in an axial sense. This mounting arrangement further permits the spring band to be expanded as the retaining lugs 80 are snapped into notches 83 in the front face of the bolt head 52 with the lip or hook 76 projecting into the counterbore 73. The extractor 74 thus yieldingly hooks the rear end of a cartridge casing and is free to be deflected when the end of a cartridge case is inserted or ejected from the counterbore 73. It will be appreciated that the extractor is simple to manufacture, requires a very minimum of space and may be easily removed simply by springing one or the other of the retaining lugs 80 out of the notch or recess 83 formed in the end of the bolt head.

The extractor 74 thus releasably grips the cartridge by the hook 76 and after firing, the bolt handle is rotated to its upper position preparatory to withdrawing and ejecting the casing. On firing the cartridge the casing will expand in the chamber and cam means are provided for positively camming the bolt rearwardly to initially free the casing from the chamber. These means comprise a member 84 rotatably and slidably mounted on the bolt body 42 between the bolt handle hub 44 and the rear end of the receiver 22 (FIGS. 1 and 8). Member 84 also serves as a rear gas baffle, as is later explained, and further includes a cam face 86 which is engaged by a projection 88 extending from the handle hub 44. In the last part of the upward movement of the bolt handle 36 the projection 88 engages the cam surface 86 and positively displaces the bolt 34 rearwardly thereby drawing with it the expended cartridge casing which is gripped by the lip or hook 76. It will be noted the extractor 74 is in the counterbore end of the barrel at this point and is thereby prevented from expanding as the casing is forcibly removed by this camming action. The bolt may then be fully retracted and the shell casing carried rearwardly to the ejector mechanism for automatically kicking the expended shell casing from the receiver.

Reverting back to member 84, it will be seen that it is somewhat greater than semi-circular in cross section with its lower ends resting upon shoulders 90 (FIG. 1) formed adjacent the rear end of the receiver 22. The member 84 is normally maintained in a given angular relationship with the bolt body 42 by means of a spring pressed ball detent 92 (FIG. 5) riding in a longitudinal groove 94 formed in the tubular body 42. This detent arrangement permits the bolt body to be rotated relative to the member 84 when the bolt handle 36 is moved to its lower position to lock the bolt in the breech of the rifle.

Referring next to FIG. 6, it will be seen that a tapered slot 96 is cut in the lower front end of the bolt head 52 and enters the bottom of the counterbore 73. Upon retraction of the bolt 34, the slot 96 is in aligned relation with a stamped sheet metal ejector 98 (FIGS. 1 and 3) which is spring urged upwardly. As the bolt nears full retraction, the ejector 98 enters slot or groove 96 and the rear end of the casing will forcibly strike the forward face of the ejector 98, thereby kicking the casing out through an ejection port or cut-a-way 100 intermediate the ends of the receiver. It will be noted that the lip 76 (FIG. 7) is generally aligned with the port 100 so that as the rear end of the casing strikes the ejector 98 it will be thrown laterally through the port 100 in a low arc.

The ejector 98 is disposed towards the rear of a bottom or lower opening 102 formed in the receiver 22 and is provided with an integral depending tail 104 which is guidingly received by a slot 106 formed in an ejector housing 108 (see also FIG. 4). The upper end of the ejector 98 slidingly engages the rear wall of a magazine box 110 and the rear wall of the receiver opening 102. A spring 112 is captured between the bottom wall of housing 108 and a projection 114 extending rearwardly of the extractor 98. This arrangement provides for vertical reciprocating movement of the ejector 98 allowing it to move upwardly into the slot 96 of the bolt head 52 upon retraction of the bolt and to thereby eject the expended casing. The extractor is thereafter cammed downwardly as the bolt is again moved forwardly to feed another shell from magazine 38 into the firing chamber.

Referring now to the magazine 38 it will be seen that it comprises the magazine box 110 which is a sheet metal stamping bent into a rectangular configuration with the ends of the stamping meeting in abutting relation along a vertical line intermediate the width of the rear wall of the magazine box as is best seen in FIG. 4. A pair of tabs or lips 116 project outwardly from the rear wall of the magazine box and receive a downbent tab 118 extending from the ejector housing 108. The rear wall of the magazine box is also slotted at 120 to receive projections 122 extending from the walls of housing 108 to prevent the rear wall of the magazine 110 from spreading. It will also be noted that a lip 124 projects forwardly from the front wall of box 110 and lips 126 project rearwardly from the rear wall of the box. The lips 126 are spaced apart to permit passage of the ejector 98 therebetween and further guide said ejector. The lips 124, 126 are both spaced below the upper side edges 128 of said box, so that box 110 may preferably be mounted on receiver 22 by forming ledges 130 (FIGS. 1 and 3) longitudinally of the bottom opening 102 and opposed horizontal slots 132, 134 spaced downwardly from the ledges 130 at the forward and rear ends of the opening 102. With this arrangement, the magazine box 110 may be assembled on the receiver 22 by inserting the lips 126 fully into the slot 134 engaging the upper box edges 128 with the ledges 130 and then shifting the box forwardly a distance sufficient to introduce the lip 124 into the slot 132 and against the forward end of the receiver opening 102. The housing 108 with the ejector 98 and spring 112 assembled thereon is then inserted between the rear end of the box 110 and the forward end of the bottom opening 102 with the projections 122 entering the slots 120. Thus lips 124 and 126 are caught in the slots 132 and 134 respectively and cannot be removed without dismantling the housing 108.

It will be appreciated that while the combination mounting of the ejector 98, its housing 108 and the magazine box 110 have certain unique cooperative relationships, it would be possible to attain advantages by mounting either one or the other in the manner described, utilizing the

CONFIDENTIAL-SUBJECT TO PROTECTIVE ORDER
KINZER V. REMINGTON

R2539459

necessary functions attributable to each and yet by either using some other form of ejector mechanism or using some other means for mounting the magazine box.

As can be seen from FIG. 1 the magazine box **110** is disposed within a central opening through the rifle stock **20**. A base plate **131** covers over the bottom of this opening and is held in place by the screws **24, 26**. A follower plate **133** is urged upwardly from the base plate **131** by a spring **135**. This arrangement, as illustrated, permits cartridges to be loaded through the upper and lower ports **100** and **102** into the magazine **38** in staggered relationship. The follower plate **133** is provided with an off-set projection **137** (FIG. 2) which insures that the cartridges will be caught on one side or the other of the bottom opening **102** (see FIG. 3) and not be fed loosely from the magazine **38**. The cartridges project upwardly a sufficient distance so that upon full retraction of the bolt **34** the rear end of the uppermost cartridge is picked up for projection by the bolt **34** centrally from the magazine and then carried into the firing chamber as the bolt is moved forward. It will be seen that the inbent ridges **139** are formed on the side walls of the magazine box **110** to engage the forward shoulders of the cartridge casings to prevent shucking of the cartridges and consequent damage to the tips of the bullets.

The firing mechanism for the present invention is uniquely simple and comprises a firing pin **136** (FIG. 5) centrally disposed within the tubular bolt body **32** and projecting through a central bore of the bolt head **52**. A firing pin stop nut or stop piece **138** is threaded on the forward end of the firing pin **136** and is engageable with the rear end of the reduced bolt head diameter **54** to limit the protrusion of the forward end or point **141** of the firing pin **136** beyond the counterbore **73**. The point **141** of the firing pin **136** is best seen in its cocked position in FIG. 9, wherein it can also be seen that the bore in the outermost end of the bolt head closely approximates the diameter of the point of the firing pin to minimize the amount of gas which may be blown rearwardly through the bolt body **42**. As has been noted, the stop piece **138** controls the extent of firing pin protrusion, this being established by threading the stop piece **138** to the appropriate axial position on the firing pin **136**.

A lock washer **140** (FIG. 5) maintains the stop piece **138** in adjusted position. More particularly, the lock washer **140** is formed with a central opening having a straight edge which non-rotatably engages a flat **142** formed lengthwise of the firing pin **136** and has spurs projecting outwardly and received in notches formed in the rear end of the stop piece **138**.

A main spring **144** is coiled about an intermediate length of the firing pin **136** and is seated at its forward end on the lock washer **140** and at its other end on a washer **146** which is axially positioned on the firing pin **136** by a cocking piece **148** threaded on the rear end thereof to preload the spring **144**. The washer **146** is also non-rotatably mounted on the firing pin **136** by reason of a central hole having a straight edge (FIG. 11) engaging the flat **142**. A sleeve **150** slidably surrounds the cocking piece **148** (FIG. 5) and is provided with projections **152** (FIG. 11) at its forward end which interdigitate with spurs extending outwardly of the washer **146**. The sleeve **150** (FIG. 10) at its rear end butts against a shoulder formed on the assembly screw **50** and is rotatably mounted thereon by means of indentations as at **154** which engage a peripheral groove **156** formed in the forward end of the screw **50**. The sleeve **150** is provided with a lengthwise slot **158** having a width somewhat less than the diameter of a transverse hole **160** formed adjacent the rear end of the cocking piece **148**. A cocking pin **162** (FIG. 8) is disposed within the hole **160** (FIG. 5) and retained therein by the marginal edges of the sleeve slot **158** embracing a necked portion adjacent the head of the pin **162**. The head of cocking pin **162** is disposed adjacent the outer surface of the bolt body **42** passing through a cam opening **164** formed therein.

With this arrangement of parts, the firing pin may be cocked and fired in the following fashion. From FIG. 12 it will be seen that the head of the cocking pin **162**, in the forward position of the bolt is disposed within the rear of receiver **22**, entering into the near channel **70**. A sear lever **166** projects upwardly into the near channel **70** (see also FIG. 13) in obstructive relation to further forward movement of the cocking pin **162**, and is integrally formed on a sear **169** to be later described in detail.

Normally the firing pin **141** is held in a retracted or cocked position by reason of spring **144** being compressed and held by the cocking pin resting in a notch **168** (FIG. 5) formed adjacent the rear end of the cam opening **164**. In this position of the cocking pin **162** the cocking piece **148** and striker **136** are of course retracted while the spring **146** is compressed since the washer **146** is held relatively stationary by the sleeve **150**. The above describes the relative disposition of the cocking pin **162** and related parts as the bolt **34** is moved forwardly to close the action of the rifle. After the action is closed, the bolt handle **36** is lowered to locked position as above described. In so lowering the handle **36**, the bolt body **42** is rotated relative to the receiver **22** while the cocking pin remains relatively stationary being captured in the channel **70**. The cocking pin **162** is thus held in cocked position at the rear of the greatest lengthwise extent of the opening **164** and the rifle is in readiness to be fired. Finger pressure on the trigger **40** will release the sear **169**, in a manner later described, allowing the sear lever to swing downwardly out of the path of forward movement of the cocking pin **162** thereby permitting the firing pin to percussively strike the cartridge in the firing chamber under the influence of main spring **144**. It will be noted that the cocking piece **148** is axially adjusted on the firing pin **136** to prevent the cocking pin **162** from striking the forward end of the opening **165**.

After the rifle has thus been fired the bolt handle **36** is raised to its upper position thereby rotating the tubular bolt body **42** relative to the cocking pin **162**. During this rotation the angularly confined pin **162** is displaced rearwardly by cam surface **171** (FIG. 5) of the opening **164** thereby camming the cocking pin **162** and with it the firing pin **136** rearwardly and reseating the cocking pin **162** in the notch **168**. Spring means, later described, return the sear lever **166** to the position illustrated in FIG. 12 and the firing cycle just described may be repeated after retraction of the bolt **34** to eject an expended cartridge casing and return movement of the bolt to feed a fresh cartridge into the chamber.

The bolt and firing pin assembly above described comprise parts which may be readily fabricated primarily by screw machine operations and by sheet metal stampings. Their assembly in the original manufacture of the rifle as well as their disassembly for repair or adjustment is extremely simple and convenient. Disassembly involves merely the removal of screw **50** together with sleeve **150**, removal of cocking pin **162**, withdrawal of the firing pin **136** and removal of the pin **58** to take down the component parts of bolt **34**. The main spring **144** may be removed by threading the cocking piece **148** off the rear end of firing pin **136**. Adjustment of the extent of protrusion of the point **141** of the firing pin, may be made by telescoping the bolt head **52** over the point **141** in abutting relation with the stop piece **138**. With lockwasher **140** removed, stop piece **138** may be varied axially of firing pin **136** to obtain the desired extension of point **141** beyond the inner face of counterbore **73**. The extent of protrusion may be gauged by the sleeve **150** (FIG. 10). With the extractor **74** removed the sleeve projections **152** may be brought against the counterbore **73** on either side of the firing pin **141** and the amount of protrusion set to match the height of the projections **152**

CONFIDENTIAL-SUBJECT TO PROTECTIVE ORDER
KINZER V. REMINGTON

which height is in fact the preferred distance for protrusion of the firing pin.

Normally when a cartridge is discharged its casing is expanded into sealing contact with the walls of the firing chamber preventing rearward escape of gases so that at least substantially all of the gases are propelled outwardly through the barrel of the rifle. However, in the case of an ineffective seal or rupturing of the cartridge casing, gases may blow back rearwardly of the firing chamber past the bolt head 52 which is locked in the breech of the firing chamber. In order that gases may not injure the user of the rifle, various ports and baffles are provided to deflect such gases laterally of the receiver. In FIG. 7, the tapered slot 96, when the bolt head is locked, is disposed to provide communication for the forward end of the bolt head 52 with a lateral hole 151 formed in the receiver 22 forward of the channel 70 (FIG. 2). The slot 96 thus provides conduit means for conducting gases from the rifle chamber to a predetermined location in the receiver. It will be noted that the baffle lug 64 is aligned with the slot 96 and the port 151 for deflecting gases outwardly through the port 151. This will effectively minimize the passage of gases rearwardly of the front baffle. What little gas may pass between the bolt and receiver is throttled as it enters the opening 100 thereby safely dissipating its effect.

There may also be a possibility of gases passing through the firing pin hole opening of the counterbore 73 (FIG. 9). Such gases would pass interiorly of the bolt head and then be vented for the most part through a port 153 (FIG. 7) communicating with the interior of said bolt and aligned with a port 155 (FIG. 2) formed in the receiver 22. The firing pin hole and port 153 provide conduit means for conducting gases from the rifle chamber to a predetermined location in the receiver. The baffle lug 64 is aligned with the ports 153 and 155 for deflecting gases outwardly of the receiver through the port 155. This effectively minimizes the passage of gases rearwardly of the baffle. There is also a possibility that some gases will pass rearwardly through the bolt body 42 and escape through the cam opening 164 which in the firing position of the bolt is enclosed within the rear end of the receiver 22. In order to prevent gases from escaping from the rear of the receiver 22 adjacent the eye of the shooter, member 84 is arranged to serve as a baffle member and is positioned at the rear end of the receiver to insure lateral deflection of such gases. This position of the member 84 is automatically provided for by the manner in which it is mounted on the bolt body 42. As has been noted, the member 84 is rotatable on the body 42 and as can be seen, is also axially slidable thereon. Thus, in the primary ejection of an expended cartridge the member 84 will be firmly seated against the rear face of receiver 22 when projection 88 (FIG. 8) engages cam surface 86 as previously described. This position of member 84 is also assumed when the action is locked, as indicated in FIG. 1.

The rear baffle is free to slide forwardly and rearwardly slightly so that pressure of escaping gas will move it backward if necessary to escape.

The sear 169 and trigger 40 also embody certain novel features which will be apparent from the following detailed description of their construction and operation with particular reference being had to FIGS. 12–16.

A U-shaped trigger mounting bracket 172 is secured beneath a tang 174 extending rearwardly of the receiver 22. More particularly the bracket 172 comprises a sheet metal stamping having its bridge vertically disposed towards the rear of tang 174. A tab 180 is bent rearwardly from the upper edge of the bridge of bracket 172 and is received in an appropriate recess 177 (FIGS. 12 and 16) formed adjacent the rear end of a slot 176 extending through the rear portion of tang 174. Recesses 181, 183 (FIG. 13) are formed on opposite sides of the lower surface of the receiver 22 and provide vertical faces which are embraced by ears 182 extending upwardly from the front

ends of the arms of bracket 172. A pin 184 extends through the ears 182 and the embraced portion of receiver 22 to secure the front end of bracket 172 thereto with its upper edges engaging the lower surface of tang 174 and its rear end retained in place by tab 180. The pin 184 is thus the single fastening element for the trigger mounting bracket 172.

The trigger 40 is pivotally mounted on a pin 186 extending between depending ears 187 (FIGS. 12 and 15) of the bracket 172. The trigger 40 comprises, as can be seen, a rearwardly extending leg 188 which is cooperatively disposed relative to a safety member 190, later described in detail, and a forwardly extending leg 192 which is disposed in cooperative relationship with the sear 169.

The sear 169 is bent from a single piece of sheet metal and comprises two U-shaped portions one of which includes a bridge 196 (FIGS. 14 and 15) and arms 194, 195 embracing the bracket ears 182 (FIG. 13) and pivotally mounted on the pin 184. The second U-shaped portion comprises a second bridge 197 interconnecting the arm 195 with a third outwardly spaced arm 199.

The sear lever 166 is formed as an integral extension of the sear arm 195 and projects through slot 201 into channel 70 (FIGS. 13 and 16) to cooperate with the cocking pin 162 as above described. The sear arm 199 extends upwardly receiving the unheaded end of pin 184, and extending above the stock 20 (FIG. 13) adjacent a relieved portion 203 of the receiver 22. The upper end of arm 199 is outbent to provide a visual indicator 205 which may readily be checked when the action is closed to determine whether or nor the firing pin is cocked. That is, when the firing pin is cocked the indicator 205 is in its upper position seen in FIG. 12, and after the gun has been fired, forward movement of the cocking pin 162 depresses the sear lever 166 into slot 201 and rotates the sear 169 bringing the indicator 205 to a lower horizontal position.

A torsion spring 206 (FIGS. 12 and 13) is disposed between the sear arms 195, 199, being concentrically positioned on the pin 184 by a bushing 208. The free ends of the torsion spring 206 respectively bear against the rear surface of receiver recess 183 and the upper end of the bridge 197 to urge the sear 169 in a counterclockwise direction (FIG. 12) and thus return the cocking lever 166 to its upright position when the firing pin is cocked by manipulation of the bolt handle 36 as above described.

The sear 169 is latched in what may be termed its cocked position by the lower knife edge of the bridge 196 bearing against the forward face of the trigger leg 192. It will be seen that a spring loaded plunger 210 (FIG. 12) bears against the trigger leg 188 to urge the trigger leg 192 into obstructive relation with the sear bridge 196. When the action is closed and the bolt locked in the receiver, the head of cocking pin 162 will engage the sear lever 166 and under the influence of main spring 144 tend to rotate the sear in a clockwise direction (FIG. 12) bringing the knife edge of bridge 196 into firm engagement with the forward face of trigger leg 192. The extent of this engagement is adjustably controlled by a screw 212 threaded into the outer end of leg 192. It will be apparent that if the screw 212 were threaded further inwardly of the leg 192 the bridge 196 would be disposed nearer the upper edge of the leg 192 and conversely if the screw 212 were threaded outwardly the spring loaded plunger 210 would rotate the trigger to space the knife edge of bridge 196 further from the upper edge of the leg 192. In this manner the extent of trigger travel necessary to release the cocking pin 162 may be controlled to suit the needs of the user of the gun.

The spring loaded plunger 210 is mounted on the safety member 190 which is longitudinally slidable between the arms of the trigger bracket 172.

The safety member 190 is provided with a thumb piece 220 which is integrally formed as a rearward extension of an upward projection from the safety member 190 and

CONFIDENTIAL-SUBJECT TO PROTECTIVE ORDER
KINZER V. REMINGTON

R2539461

projecting upwardly through the tank slot **176**. The thumb piece **220** (FIG. 12) slidably engages the upper surface of tang **174** to provide the rear bearing point for the safety member **190**. A pin **222** extends between the arms of bracket **172** and slidingly supports a forward horizontal undersurface of the safety member **190**. An adjustable intermediate bearing point for the safety member is provided by an upwardly projecting screw **224** which is threaded into the safety member **190** and bears against the lower surface of tank **174**.

Various surfaces formed on the trigger leg **188** cooperate with the safety member **190** as will now be described. A raised land **226** is formed at the rear of leg **188** beneath a screw **228** projecting from the safety member **190**. When the safety member is in the "safe" position illustrated in FIG. 12, the screw **228** is in obstructive relation with land **226** thereby preventing any rotation of the trigger **40** sufficient to bring the leg **192** out of obstructive relation with the sear bridge **196**, which in turn prevents release of the cocking pin **162** and discharge of the piece. The safety member is also arranged to lock the bolt **34** so that the action cannot be inadvertently opened when the gun is in "safe" condition. This is attained by an upstanding lug **230** projecting from the forward end of the safety member **190** through a second tank slot **232** (FIGS. 12 and 16) spaced forwardly of the slot **176**. The bolt handle hub **44** is notched at **234** (FIG. 15) to receive the lug **230** when the bolt handle **36** is in its lower position thereby locking the bolt **34** with the action closed.

The trigger leg **188** is transversely notched at **229** to receive the spring loaded plunger **210** to provide detent means for releasingly maintaining the safety member **190** in its "safe" position.

The safety member **190** is displaced forwardly of the notch **229** to a further "safe" position in which the screw **228** will still be disposed above the land **226** preventing releasing movement of the trigger **40** and wherein the lug **230** will be disposed forwardly of the bolt handle hub **44**. In this position of the safety member **190** the action may be opened and closed by manipulation of the bolt handle **36**, as, for example, to discharge an expended cartridge casing, or to empty the magazine **38** by reciprocation of bolt **34** without danger of firing the rifle.

In the forwardmost or firing position of the safety member the screw **228** is spaced forwardly of the raised land **226** allowing sufficient movement of the trigger **40** to release the sear **169**, thereby releasing the firing pin. A second transverse notch **231** is formed in the trigger leg **188** to receive the spring loaded plunger **210** and releasably maintain the safety member **190** in its firing or inoperative position. Travel of the trigger beyond that necessary to bring the leg **192** out of obstructive relationship with the sear bridge **196** may be limited by a screw **236** threaded into the same hole as the screw **224** and projecting from the lower surface of safety member **190**. Thus, immediately upon release of the sear **169** the trigger leg **188** may be arranged to engage the screw **236** thereby minimizing the extent of trigger travel after firing the rifle. The force of trigger pull is primarily controlled by a spring **216**, confined by a screw **218**, and (FIG. 12) urging the plunger **210** into engagement with the trigger leg **188**. The force of spring **216** may be varied by the extent to which screw **218** is threaded into the safety **190**. With the safety member **190** in the illustrated safe position, it will be seen that the upper end of screw **218** is accessible through slot **176** to receive a screw driver whereby the force of spring **216** may be readily adjusted without disassembly of the rifle components.

A further point to be noted is that the sear lever **166** also serves as a bolt stop. That is, when the bolt is retracted, the right hand (FIGS. 5 and 13) baffle lug **64** will engage the sear lever **166** thereby limiting rearward travel of the bolt **34**. When it is desired to remove the bolt, trigger **40** is pulled to drop the trigger leg **192** below sear bridge **196** and then cocking indicator **205** is depressed (see also FIG. 12) to lower cocking lever **166** below the level of channel **70** thereby permitting the bolt **34** to be withdrawn from the receiver **22**.

Operation

The rifle is loaded by inserting cartridges downwardly into the magazine while the bolt **34** is disposed in its retracted position. A cartridge is rammed into the firing chamber of the rifle by forward movement of the bolt, lip **76** of the extractor **74** engaging the groove of the cartridge case. As the bolt **34** is moved forwardly in the receiver the cocking pin **162** engages the sear lever **166** (FIG. 12). When the bolt is rotated to its breech closing position, the cocking pin is prevented from rotating by channel **70** of the receiver and is held in its cocked position at the rear of the bolt cam opening **164** (FIGS. 5 and 8) by the sear lever **166**. The cocking indicator **205** (FIG. 12) is disposed in its upwardly extending position indicating the cocked condition of the rifle. When the bolt is rotated to its locked position, the lock lugs **60** are carried into engagement with the shoulders **72** in the breech end of the receiver thus locking the bolt in its closed position. The baffle lugs **64** are prevented from rotating by channel **70** and are held thereby in axial alignment rearwardly of the receiver gas escape ports **151** and **155** (FIG. 2) and the slot **96** and port **153** (FIG. 7) on opposite sides of the bolt **34**.

The cocking pin **162** is held in its cocked position against the force of the compressed main spring **144** by the sear **169** which is prevented from rotating by the trigger leg **192**. As shown in FIG. 12, the plunger **210** urges the trigger leg into its sear engaging position. When the trigger is pulled, the plunger **210** is forced upwardly against spring **216** and the trigger leg **192** is pivoted downwardly releasing the cocking pin **162**. The firing pin is thrust forwardly by the main spring **144** firing the round in the chamber and the cocking pin **162** moves the sear lever **166** downwardly out of the channel **70**.

In the event of rupture of a cartridge case, escaping gases are deflected outwardly through the gas escape ports by means of the baffle lugs **64**. Furthermore, any gas which might escape rearwardly of the baffle lugs will be deflected outwardly by the rear baffle **84**.

To discharge the cartridge case after a round is fired, the bolt handle **36** is rotated counterclockwise. Projection **88** (FIG. 8) of the bolt handle engages the cam face **86** of the rear baffle and the bolt is cammed rearwardly to break the seal of the cartridge case in the chamber.

As the bolt handle **36** is raised, the cocking pin **162** is prevented from rotating by channel **70** (FIG. 12) and is displaced rearwardly by the cam surface **171** (FIG. 5) of the opening **164**. The cocking pin **162** is thus reseated in the notch **168**, its position prior to loading the round into the chamber. The sear spring **206** returns the sear **169** to the position illustrated in FIG. 12.

As the bolt is pulled rearwardly to eject the cartridge case, the ejector **98** is received in the slot **96** (FIG. 6) of the bolt and the ejector strikes the lower edge of the cartridge case which is then ejected from the receiver. Another round may then be loaded into the chamber and the firing cycle repeated.

It will be noted from the disclosure as seen in the drawings that the rifle is for a right handed shooter. Very few parts of the assembly would require changes in order to convert the same for left handed shooting. The bolt body, handle, and head, the extractor, the receiver port, the rear baffle, and the stock are the only parts requiring conversion to manufacture guns for the left hand shooter. The remaining mechanism need not be altered and accordingly most of the component parts can be interchangeably used for right hand or left hand rifles.

CONFIDENTIAL-SUBJECT TO PROTECTIVE ORDER
KINZER V. REMINGTON

R2539462

Having thus described the invention what is novel and desired to be secured by Letters Patent of the United States is:

1. In a rifle or the like, a receiver having a lengthwise bore, a bolt slidable therein, a sear for holding the firing mechanism of said bolt in cocked position in the normal position of said sear, said receiver having opposed recesses formed in its lower portion generally beneath the rear end thereof, said recesses including opposed vertical faces, said receiver further comprising a rearwardly extending tang having a slot adjacent its rear end, a U-shaped sheet metal trigger mounting bracket having its bridge generally vertically disposed and aligned with the rear end of said tang slot and with its arms extending forwardly thereof, the bridge of said bracket having a tab extending upwardly through said tang slot and rearwardly to engage an upper surface of said tang, said bracket further having ears extending upwardly from the forward ends of its arms and embracing the vertical faces of said receiver recesses, a retaining pin extending through said bracket ears and said receiver as the single fastening element for mounting said bracket on said receiver, a trigger being pivotally mounted on a pin extending between the arms of said mounting bracket beneath and to the rear of said retaining pin, said sear being mounted on said retaining pin said trigger having a first leg for engaging said sear and releasably holding said sear in its normal position, said trigger further having a second leg extending rearwardly of its pivotal pin and being generally horizontally disposed, a safety member slidably mounted between the arms of said bracket and means for guiding said safety for longitudinal movement between a safe position in which the safety member is in obstructive relation with said second trigger leg preventing disengagement of said first leg from said sear and a firing position wherein the trigger may be moved to disengage said first leg from said sear and the rifle fired, the means for guiding said safety member comprising a thumb piece slidably engaging the upper surface of said tang and joined to said safety member by an integral upright portion extending through said tang slot, a pin extending between the arms of said mounting bracket and engaging a horizontal undersurface of said safety member and a bearing projection extending upwardly from said safety member and engaging the undersurface of said tang intermediate said thumb piece and said bearing member.

2. In a rifle or the like as in claim 1 wherein a raised land is formed on the rear end of said second trigger leg and a safety screw is threaded into the undersurface of said safety member and is disposed above said raised land and in obstructive relation to releasing movement of said trigger in the safe position of said safety member, said safe position being the rearward position of said safety member and said safety member being slideable forwardly to dispose said safety screw in advance of said raised land in the firing position of said safety member.

3. In a rifle or the like as in claim 2 wherein the tang has a second slot spaced forwardly of the first-mentioned tang slot, the bolt has a hub having a notch in its lower surface opening forwardly of said hub and disposed above said second tang slot and wherein the safety member has an upwardly extending projection passing through said second tang slot and entering said notch in the safe position of said safety member to prevent rotative movement of said bolt.

4. In a rifle or the like as in claim 3 wherein longitudinally spaced front and rear notches are formed in the upper surface of said second trigger leg with the rear notch being disposed immediately in advance of said raised land and a spring loaded plunger projects from the lower surface of said safety member and enters said rear notch in the safe position of said safety member and enters the front notch in the firing position of said safety member.

5. In a rifle or the like as in claim 4 wherein the spring loaded plunger is mounted in a vertical hole in said safety member and a compression spring is urged thereagainst by a screw threaded into the upper end of said hole and wherein said screw is accessible through said rear tang slot for adjustment to vary the pressure exerted by said spring on said plunger and thereby vary the force required for pulling the trigger.

6. In a rifle or the like, as in claim 4 wherein the relative spacing between the notches on the rear trigger leg, the raised land thereon, the safety screw, the safety member projection for entering the hub notch are such that in the rear safe position of the safety member the safety screw is in obstructive relation with said raised land and the upwardly extending safety member projection is engaged with the hub notch with the spring loaded plunger entering the rear notch on the trigger leg and when the plunger is disposed intermediate said front and rear notches, the safety screw is in obstructive relation with said raised land preventing releasing movement of said trigger and said upwardly extending safety projection is disposed in advance of said hub notch thereby permitting rotation of said hub and when the plunger enters said front notch the safety member is moved in advance of said raised land and out of obstructive relation therewith.

7. In a rifle or the like comprising a receiver having a lengthwise bore, a bolt slidable therein, said receiver having a tang extending rearwardly thereof with a slot formed adjacent its rear end, a U-shaped trigger mounting bracket having its bridge vertically disposed and aligned with the rear end of said tang slot with its arms extending forwardly thereof, the bridge of said bracket having a tab extending upwardly through said tang slot and rearwardly to engage an upper surface of said tang, said bracket being secured to said receiver by a single retaining pin extending through the forward ends of the bracket arms and a portion of said receiver, a trigger pivotally mounted on a pin extending between the arms of said mounted bracket, said trigger having a sear engaging portion and a horizontal rearwardly extending leg, a safety member slidably mounted between the arms of said bracket and guided for horizontal movement between a rearward safe position and a forward firing position, a spring loaded plunger slidably mounted in a vertical hole formed in said safety member, a compression spring bearing against said plunger and urging it downwardly into engagement with said trigger leg, said spring being confined at its upper end by a screw threaded into said vertical hole, front and rear notches formed in said trigger leg and spaced apart a distance approximating the movement of said safety member between said safe and firing positions and in combination with the plunger serve as detent means for said safety member as well as providing the means for urging said trigger into latching engagement with said sear.

8. In a rifle or the like as in claim 7 wherein a screw is threaded into said safety member forwardly of said plunger and depending therefrom and obstructively engaging said second trigger leg upon a predetermined travel of the leg past that necessary to release the sear.

9. In a rifle or the like comprising a receiver having a lengthwise bore, a bolt slidable therein, said receiver having a tang extending rearwardly thereof with a slot formed adjacent its rear end, a U-shaped trigger mounting bracket having its bridge vertically disposed and aligned with the rear end of said tang slot with its arms extending forwardly thereof, the bridge of said bracket having a tab extending upwardly through said tang slot and rearwardly to engage an upper surface of said tang, said bracket being secured to said receiver by a single retaining pin extending through the forward ends of the bracket arms and a portion of said receiver, a trigger pivotally mounted on a pin extending between the arms of said mounted bracket, said trigger having a sear engag-

CONFIDENTIAL-SUBJECT TO PROTECTIVE ORDER
KINZER V. REMINGTON

ing portion and a horizontal rearwardly extending leg, a safety member slidably mounted between the arms of said bracket and guided for horizontal movement between a rearward safe position and a forward firing position, a spring loaded plunger slidably mounted in a vertical hole formed in said safety member, a compression spring bearing against said plunger and urging it downwardly into engagement with said trigger leg, said spring being confined at its upper end by a screw threaded into said vertical hole, front and rear notches formed in said trigger leg and spaced apart a distance approximating the movement of said safety member between said safe and firing positions to serve as detent means for said safety member

and with said spring loaded plunger to provide the means for urging said trigger into latching engagement with said sear.

References Cited in the file of this patent

UNITED STATES PATENTS

859,477	Aubrey	July 9, 1907
1,103,228	Swebilius et al.	July 14, 1914
1,108,400	Savage	Aug. 25, 1914
1,110,837	Swebilius et al.	Sept. 15, 1914
2,478,892	Bistoff	Aug. 16, 1949
2,821,040	Tatman	Jan. 28, 1958
2,869,269	Couture	Jan. 20, 1959

VEIGEL

CONFIDENTIAL-SUBJECT TO PROTECTIVE ORDER
KINZER V. REMINGTON

R2539464

Copies to: R. L. Hall
G. E. Puckett
A. D. Kerr
C. B. Workman
W. E. Leek
J. J. Marley
J. Kowalski
Est. File #3401

RFK

March 21, 1975

J. H. ~~SUMMARY~~

Model 700-40XC-40XR Three-Position Safety

An economic evaluation has been completed on the proposal to re-design the present Two-Position Safety to a Three-Position Safety on the Models 700-40XC-40XR rifles. Presently, the bolt on these rifles can be unlocked and opened only when the safe is in the 'Fire' position. The Three-Position safe would enable the bolt to be opened in either the 'Fire' position or the new 'U' position. On the 'U' position the rifle could not fire.

The economics indicate an annual cost increase of $4400 and an expenditure of $25,600 for new tooling and fixturing. The full book unit cost indicates a cost increase of $ .036 for each rifle.

METHODS & STANDARDS SECTION
H. G. Carlson, Superintendent
John Polivka
By: John Polivka

JP/mc

CONFIDENTIAL-SUBJECT TO PROTECTIVE ORDER
KINZER V. REMINGTON

Copies to: R. L. Hall
G. E. Puckett
A. D. Kerr
C. B. Workman
W. E. Leek
J. J. Marley
J. Kowalski
Est. File #3401

March 21, 1975

J. H. SWEENEY

Model 700-40XC-40XR Three-Position Safety

An economic evaluation has been completed on the proposal to re-design the present Two-Position Safety to a Three-Position Safety on the Models 700-40XC-40XR rifles. Presently, the bolt on these rifles can be unlocked and opened only when the safe is in the 'Fire' position. The Three-Position safe would enable the bolt to be opened in either the 'Fire' position or the new 'U' position. On the 'U' position the rifle could not fire.

The economics indicate an annual cost increase of $4400 and an expenditure of $25,600 for new tooling and fixturing. The full book unit cost indicates a cost increase of $ .056 for each rifle.

METHODS & STANDARDS SECTION
F. G. Carlson, Superintendent
John Polivka
By: John Polivka

JP/mc

CONFIDENTIAL-SUBJECT TO PROTECTIVE ORDER
KINZER V. REMINGTON

8½ & 11 — 6 columns
With description column

MODELS 700 - 40XC - 40XR 3-POSITION SAFETY

		M/700		M/40XC - 40XR	
		PRESENT 2-POSITION	PROPOSED 3-POSITION	PRESENT 2-POSITION	PROPOSED 3-POSITION
STD. LABOR		99,251	101,889	340,980	343,618
VARIANCE	10%	9,925	10,189	34,098	34,362
TOTAL STD. LABOR		109,176	112,078	375,078	377,980
IND. REL	44%	44,762	45,952	153,782	154,972
DIRECT EXPENSE		1,044	1,106	3,380	3,442
ALLOCATED BURDEN	9.8%	10,699	10,984	36,758	37,042
MFG. OVERHEAD	16.3%	17,796	18,269	61,138	61,611
SUB TOTAL		183,477	188,389	630,136	635,047
PLANT OVERHEAD	12%	22,017	22,607	75,616	76,206
INV. ADJUSTMENT	1%	1,835	1,884	6,301	6,350
TOTAL COST/C	$	207,329	212,880	712,053	717,603
COST INCREASE PER UNIT FULL BOOK			¢ .056		¢ .056

CONFIDENTIAL-SUBJECT TO PROTECTIVE ORDER
KINZER V. REMINGTON

RD-6565
Rev.:10-10-67
1-12-71

ESTIMATE #_____

ESTIMATED SAVINGS & RETURN ON INVESTMENT

M/700 -40XC -40XR 3 - POSITION SAFETY

	PRESENT 2-POSITION SAFETY	PROPOSED 3-POSITION SAFETY		
Forecast Year	2-1975			
Quantity Forecast	105620			
OPERATING COSTS				
Purchased Parts	$	$	$	$
Raw Material				
Standard Labor	109640	112430		
Labor Variance @ 10%	10960	11240		
Industrial Relations @ 41 %	49450	50700		
Supplies	650	670		
Tool Replacement	200	230		
Cutter Grind				
Tool Maintenance	40	70		
Maintenance	250	250		
Electricity				
Equipment Depreciation @				
Franchise Tax @				
	$171190	$175590	$	$
SAVINGS IN OPERATING COST	LOSS	($ 4400)		$
Less: All other expense: All Other ____%; Federal Tax ____%		$		$
NET SAVINGS		$		$
INVESTMENT				
Project expenditures		$		$
Manufacturing and working facilities				
Net change in working capital				
Total capital required for this project		$		$
RETURN ON INVESTMENT - THIS PROJECT		%		%
NET SAVINGS - After Amortization of Operation Charges		$		$
Project Operation Charges		$ 25600		$
Less: Federal Tax ____%		$		$
Total capital required including research and development and other charges		$		$
Return on total capital required		%		%
Equipment to be released				
Increased space requirements (Decrease)				
Production capacity				
Forecast burdening		%		%

Engineer: [illegible]

Date: 3-28-75

CONFIDENTIAL-SUBJECT TO PROTECTIVE ORDER
KINZER V. REMINGTON

Approvals:

RD 650b

ILION WORKS

STANDARD COST STANDARDS

Effective Date:

Unit = 100 Components

M/700 -40XC-XR 3-POSITION SAFETY

	Model	Operation	Oper. No.	Std. Labor	Direct Expense: Supplies	Prod. Scrap.	Cutter Grind	Tool Replacement	Tool Maint.	Mfg. Equip. Repairs	All Other Repairs	Misc. Oper. Exp.	Total Direct Expense
PRESENT													
10700	700	Final Asy	175 176	81,648	.575			.079	.009		.196		
10700	"	Final Insp	310	16,376	.026			.073			.028		
[illegible]	"	Receiver - stamp "F"	167	1,227	.002			.024	.030	.002			
				99,251	.603			.176	.039	.002	.224		1.044
	ANNUAL @ 103630			50	1			1	1	.10			
10040	40XC XR	Final Asy	175	326,216	1.715			.567	.030		.642		
10040	"	Final Insp	307-1	13,537	.039			.303			.026		
30375	"	Receiver - stamp "S" "F"	167	1,227	.002			.024	.030	.002			
				340,980	1.756			.894	.060	.002	.668		3.380
	ANNUAL @ 1992			[illegible]	20			20		10			
PROPOSED													
	700	Final Asy	175 176	82,368	.577			.079	.009		.196		
	"	Final Insp	310	17,067	.028			.073			.028		
	"	Receiver - stamp "S" "F"	167	1,227	.002			.024	.030	.002			
	"	" - stamp "U"	167-2	1,227	.002			.024	.030	.002			
				101,889	.609			.200	.069	.004	.224		1.106
	ANNUAL @ 103630			105590	630			210	70	20			
	40XC XR	Final Asy	175	326,936	1.717			.567	.030		.642		
	"	Final Insp	307-1	14,228	.041			.303			.026		
	"	Receiver - stamp "S" "F"	167	1,227	.002			.024	.030	.002			
	"	" - stamp "U"	167-2	1,227	.002			.024	.030	.002			
				343,618	1.762			.918	.090	.004	.668		3.442
	ANNUAL @ 1992			[illegible]	40			20	—	10			

CONFIDENTIAL-SUBJECT TO PROTECTIVE ORDER
KINZER V. REMINGTON

3-POSITION SAFE

PRESENT	PROPOSED
M/10 XC-XR FINAL ASSY	
Oper. 175 Final Assy	Final Assy + check safe on unlock position
" 307-1 Final Insp	Final Insp + check safe on unlock position
M/700 FINAL ASSY	
Oper. 175 Assem Action 6FA-186	Assem Action + check safe on unlock pos-for firing [illegible]
" 310 Final Insp I-423	Final Insp + " " " " " " "
M/700 Receiver R.H. #33225	
Oper. 167 M-84 Dept 54 #15810	167 + Oper. 167-2 Stamp "U"
M/10 XC-XR Receiver #33575	
Oper 167	167 + Oper 167-2 Stamp "U"
M 700 Receiver L.H. #E-33265	
Oper. 167	167 + 167-2 Stamp "U"
M/700 Safety Assy R.H. #E-[illegible]	
Oper. 6-10-16-20-24-28-32-[illegible]	Same as present
M/700 Safety Assy L.H. #32[illegible]	
Oper. 05 Opens.	Same as present
M 700-10XC-XR Safety R.H. #E-15770 $9.047/c	Purchase Insp 9.00[illegible]/c
M/700 Safety L.H. #E-[illegible] $9.256/c	Purchase Insp 9.00[illegible]/c
[illegible] XX Safety Detent Spring #E-15368 $4.233/c	Purchase Insp 4.30[illegible]/c
[illegible] Detent [illegible] L.H. #E-[illegible] $4.270/c	Purchase Insp 4.00[illegible]/c
[illegible] Only	Same
Trigger Side Plate #C-30[illegible] $5.027/c	Purchase 5.0[illegible]/c

CONFIDENTIAL-SUBJECT TO PROTECTIVE ORDER
KINZER V. REMINGTON

Additional time to check safe at "U" setting
From operation #210 Final Inspection

1.	Push safe on "U"	.010
2.	Remove bolt (should come on)	.039
3.	Reassemble bolt	.039
4.	Try to move (should not)	.011

.091 MIN. = .165 HRS/C
Add .181 HRS/C
Final Assy .720
Final Insp .691

STAMP RECEIVER | OPER. 167

ADD .012 MIN. or .020 HRS X 3.73 = .075 HRS/C

CONFIDENTIAL-SUBJECT TO PROTECTIVE ORDER
KINZER V. REMINGTON

VP

WEIGEL

- 3 POSITION SAFE - F.G. CARLSON

PROCESS ENGINEERING ESTIMATE - TRIAL AND PILOT SHEET

• SEQUENCE OF OPERATIONS •

MODEL 40XR XC COMPONENT FINAL ASSEMBLY PART NO. —

DATE 1-8-75 COMPUTER KOWALSKI SHEET 1 OF 1

OPER NO.	OPERATION NAME	MACHINE	DEPT. NO.	HOURS DESIGN	HOURS BUILD
	NOTE: SAME AS PRESENT FINAL ASSEMBLY EXCEPT FOR THE FOLLOWING OPERATIONS				
175	FINAL ASSEMBLY	BENCH			
	SAME AS IS EXCEPT ADD ELEMENTS TO CHECK SAFE ON UNLOCK POSITION				
307-1	FINAL INSPECTION	BENCH			
	SAME AS IS EXCEPT ADD ELEMENTS TO CHECK SAFE ON UNLOCK POSITION				
	TOTAL				

FD-6588 1-15-63

CONFIDENTIAL-SUBJECT TO PROTECTIVE ORDER
KINZER V. REMINGTON

- 3 POSITION SAFE -

PROCESS ENGINEERING ESTIMATE - TRIAL AND PILOT SHEET

• SEQUENCE OF OPERATIONS •

MODEL 700- COMPONENT FINAL ASSEMBLY RH. LH PART NO. —

DATE 1-8-75 COMPUTER KOWALSKI SHEET 1 OF 1

OPER NO.	OPERATION NAME	MACHINE	DEPT. NO.	HOURS DESIGN	HOURS BUILD
	NOTE: SAME AS PRESENT FINAL ASSEMBLY EXCEPT FOR THE FOLLOWING OPERATIONS				
175	ASSEMBLE ACTION (700 ADL) — SAME AS IS EXCEPT ADD ELEMENTS TO CHECK SAFE ON UNLOCK POSITION FOR FIRING & RELEASE	BENCH			
310	FINAL INSPECTION — SAME AS IS EXCEPT ADD ELEMENTS TO CHECK SAFE ON UNLOCK POSITION FOR FIRING & RELEASE	BENCH			
	TOTAL				

RD-6558 1-18-63

CONFIDENTIAL-SUBJECT TO PROTECTIVE ORDER
KINZER V. REMINGTON

- 3 Positions Safe -

PROCESS ENGINEERING ESTIMATE - TRIAL AND PILOT SHEET

• SEQUENCE OF OPERATIONS •

MODEL 700- COMPONENT RECEIVER-1974. RH PART NO. E-33225

DATE 1-10-75 COMPUTER KOWALSKI SHEET 1 OF 1

OPER. NO.	OPERATION NAME	MACHINE	DEPT. NO.	HOURS DESIGN	HOURS BUILD
	NOTE:				
	SAME AS PRESENT RECEIVER EXCEPT FOR THE ADDITIONAL OPERATION				
167.2	STAMP 'U'	BENCH UNIT (SIMILAR TO D. 35484)	NEW	60	220
	(SIMILAR TO Op# 167)	STAMP	"	5	$35.00
	TOTAL				

RD-5565 1-16-63

CONFIDENTIAL-SUBJECT TO PROTECTIVE ORDER
KINZER V. REMINGTON

- 3 POSITION SAFE -

PROCESS ENGINEERING ESTIMATE - TRIAL AND PILOT SHEET

• SEQUENCE OF OPERATIONS •

15810

MODEL 40 XR XC COMPONENT RECEIVER PART NO. 33575

DATE 1-10-75 COMPUTER KOWALSKI SHEET 1 OF 1

OPER. NO.	OPERATION NAME	MACHINE	DEPT. NO.	HOURS DESIGN	HOURS BUILD
	NOTE:				
	SAME AS PRESENT RECEIVER EXCEPT				
	FOR THE ADDITIONAL OPERATION				
167-2	STAMP 'H'	ALL TOOLING FROM M1700 - OP# 167-2			
	TOTAL				

RD-6568 1-18-63

CONFIDENTIAL-SUBJECT TO PROTECTIVE ORDER
KINZER V. REMINGTON

— 3-Position Safe —

PROCESS ENGINEERING ESTIMATE - TRIAL AND PILOT SHEET

• SEQUENCE OF OPERATIONS •

MODEL 700 COMPONENT RECEIVER - 1974 (LEFT HAND) PART NO. E-332 6S

DATE 1-9-75 COMPUTER KOWALSKI SHEET 1 OF 1

OPER. NO.	OPERATION NAME	MACHINE	DEPT. NO.	HOURS DESIGN	HOURS BUILD
	NOTE:				
	SAME AS PRESENT RECEIVER (L.H.) EXCEPT				
	FOR ~~THE~~ ADDITIONAL OPERATION				
167-2	STAMP 'U'	BENCH UNIT (SIMILAR TO D-39980)	NEW	60	220
	(SIMILAR TO OP. 167)	STAMP	"	5	35.00
		TOTAL			

RD-6508 1-18-63

CONFIDENTIAL-SUBJECT TO PROTECTIVE ORDER
KINZER V. REMINGTON

3 Position Safe

PROCESS ENGINEERING ESTIMATE - TRIAL AND PILOT SHEET

• SEQUENCE OF OPERATIONS •

M/P

MODEL 700-40XC XR COMPONENT Safety Assembly - Right Hand PART NO. B-26585

DATE 1-20-75 COMPUTER Kowalski SHEET 1 OF 1

OPER. NO.	OPERATION NAME	MACHINE	DEPT. NO.	HOURS DESIGN	HOURS BUILD
	NOTE:				
	Draw the following parts from storage				
	Safety - 15370 (new)				
	Safety Button - 14578 - (same)				
6	Degrease Safety	Same as present			
10	Projection weld	" " "			
15	Supersheen	" " "			
20	Carbon - nitride	" " "			
24	Lindberg Draw	" " "			
28	Insert Hardness	" " "			
32	Black oxide	" " "			
34-8	Torch Draw to permit adjusting	" " "			
	- to Dispatch Area -				
	TOTAL				

RD-6505 1-18-53

CONFIDENTIAL-SUBJECT TO PROTECTIVE ORDER
KINZER V. REMINGTON

- 3 Position Safe -

PROCESS ENGINEERING ESTIMATE - TRIAL AND PILOT SHEET

• SEQUENCE OF OPERATIONS •

MODEL 700-LH COMPONENT Safety Assembly (Left Hand) PART NO. 32-900 M/P

DATE 1-13-75 COMPUTER Kowalski SHEET 1 OF 1

OPER NO.	OPERATION NAME	MACHINE	DEPT. NO.	HOURS DESIGN	HOURS BUILD
	Draw the following	Parts from Storage			
	Safety	90556 (New)			
	Safety Button	14578 (Same)			
	- Sequence of Operations	are the same as			
	present -				
	TOTAL				

RD-6568 1-18-63

CONFIDENTIAL-SUBJECT TO PROTECTIVE ORDER
KINZER V. REMINGTON

- 3 POSITION SAFE -

PROCESS ENGINEERING ESTIMATE - TRIAL AND PILOT SHEET

• SEQUENCE OF OPERATIONS •

MODEL 700-40X-C-R COMPONENT SAFETY - (RIGHT HAND) PART NO. M|PRINT C-15370

DATE 1-3-73 COMPUTER KOWALSKI SHEET 1 OF 1

OPER NO.	OPERATION NAME	MACHINE	DEPT. NO.	HOURS DESIGN	HOURS BUILD
	NOTE: PURCHASE FROM STAMPING VENDOR				
		$			
	PC PRICE -	90.00 | M			
	TOOLING -	$2700.00 APPROX.			
	PURCHASE INSPECTION	BENCH - COMPARATOR			
		DIAL BASE GA D-84592	ALTER	15	45
		COMP FIXTURE	NEW	15	45
		COMP. SCREEN	"	10	-
		(BALANCE OF GAGES FROM) M1700 SAFETY	AU	-	-
	TO PURCHASE PARTS STORAGE -				
	TOTAL				

RD-6568 1-18-63

CONFIDENTIAL-SUBJECT TO PROTECTIVE ORDER
KINZER V. REMINGTON

— 3 Position Safe —

PROCESS ENGINEERING ESTIMATE - TRIAL AND PILOT SHEET

• SEQUENCE OF OPERATIONS •

M/Prnt

MODEL 700 COMPONENT Safety (Left Hand) PART NO. C-90556

DATE 1-3-75 COMPUTER Kowalski SHEET 1 OF 1

OPER. NO.	OPERATION NAME	MACHINE	DEPT. NO.	HOURS DESIGN	HOURS BUILD
	Note				
	Purchase from	Stamping Vendor			
	Pcl Price –	$90.00/M			
	Tooling –	$2700.00			
	Purchase Inspection	Bench – Comparator			
		Dial Base Ga D-39939	Alter	15	45
		Comp. Fixture	New	15	45
		Comp. Screen	"	10	–
		Balance of Gages	A.M	–	–
	— To Purchase Parts Storage —				
	TOTAL				

RD-6556 1-18-63

CONFIDENTIAL-SUBJECT TO PROTECTIVE ORDER
KINZER V. REMINGTON

- 3 POSITION SAFE -

PROCESS ENGINEERING ESTIMATE - TRIAL AND PILOT SHEET

• SEQUENCE OF OPERATIONS • (RIGHT HAND)

MODEL 700-40 & R-C COMPONENT SAFETY DETENT SPRING PART NO. M/P B-15363

DATE 1-6-73 COMPUTER KOWALSKI SHEET 1 OF 1

OPER NO.	OPERATION NAME	MACHINE	DEPT. NO.	HOURS DESIGN	HOURS BUILD
	NOTE:				
	PURCHASE FROM SPRING VENDOR -				
	PC/PRICE -	$43.00 / M			
	TOOLING -	$900.00 Approx			
	PURCHASE INSPECTION	BENCH - COMPARATOR			
		WIDTH GA	NEW	5	15
		COMP. SCREEN	"	6	-
		COMP FIXTURE	STD	-	-
		MIC'S - PLUG GA	"	-	-
	- TO PURCHASE PARTS STORAGE -				
	TOTAL				

RD-6568 1-18-63

CONFIDENTIAL-SUBJECT TO PROTECTIVE ORDER
KINZER V. REMINGTON

– 3 POSITION SAFE –

PROCESS ENGINEERING ESTIMATE - TRIAL AND PILOT SHEET

• SEQUENCE OF OPERATIONS • (LEFT HAND) M/P

MODEL 700 L.H. COMPONENT SAFETY DETENT SPRING PART NO. B.90557

DATE 1-6-75 COMPUTER KOWALSKI SHEET 1 OF 1

OPER. NO.	OPERATION NAME	MACHINE	DEPT. NO.	HOURS DESIGN	HOURS BUILD
	NOTE:				
	PURCHASE FROM SPRING VENDOR –				
		PC/PRICE – $43.00/M			
		TOOLING – $900.00 ATTACH			
	PURCHASE INSPECTION	BENCH – COMPARATOR			
		COMP. SCREEN	NEW	6	–
		" FIXTURE	AV	–	–
		WIDTH GA	"	–	–
		MIC'S & plug GA	"	–	–
	– TO PURCHASE PARTS STORAGE –				
	TOTAL				

RD-05-58 1-19-63

CONFIDENTIAL-SUBJECT TO PROTECTIVE ORDER
KINZER V. REMINGTON

- 3 POSITION SAFE -

PROCESS ENGINEERING ESTIMATE - TRIAL AND PILOT SHEET

• SEQUENCE OF OPERATIONS •

MODEL 700- COMPONENT STOCK ASSEMBLY, RIGH & LEFT HAND PART NO. ALL

DATE 1-7-75 COMPUTER KOWALSKI SHEET 1 OF 1

OPER NO.	OPERATION NAME	MACHINE	DEPT. NO.	HOURS DESIGN	HOURS BUILD
	NOTE: -				
	SAME AS PRESENT STOCK ASSEMBLY				
	EXCEPT FOR THE FOLLOWING OPERATION -				
55	INLET TOP OF STOCK	RICHARDSON INLETTER	G-16		
	(SAME AS 15)	GAGE D-36962	ALTER	2	10
		BALANCE OF TOOLING & GAGES	AU	—	—
ALTER	(STA' 8 · ROUT SAFETY CLEAR, LONGER SLOT)				
55A	INLET TOP OF STOCK	P&W INLETTER			
	(ALTERNATE TO OPER" 55) R.H. ONLY	FIXTURE E-84474	AU	-	-
		FORMER L. ALT. D-84453	ALTER	2	10
		FORMER R. ALT. D. 84462	"	2	10
	TOTAL				

RD-6533 1-18-63

CONFIDENTIAL-SUBJECT TO PROTECTIVE ORDER
KINZER V. REMINGTON

— 3 POSITION SAFE —

PROCESS ENGINEERING ESTIMATE - TRIAL AND PILOT SHEET

• SEQUENCE OF OPERATIONS •

B.33590

MODEL 40XC-XR COMPONENT STOCK ASSEMBLY PART NO. 33591

DATE 1-8-75 COMPUTER KOWALSKI SHEET 1 OF 1

OPER NO.	OPERATION NAME	MACHINE	DEPT. NO.	HOURS DESIGN	HOURS BUILD
	NOTE:				
	SAME AS PRESENT EXCEPT FOR THE	STOCK ASSEMBLY FOLLOWING OPERATION			
60	D/C INLET	RTR MACHINE			
	SAME EXCEPT SAFETY CLEAR SLOT IS LARGER	TAPE	AGER	.3	—
	TOTAL				

RD-6555 1-15-63

CONFIDENTIAL-SUBJECT TO PROTECTIVE ORDER
KINZER V. REMINGTON

— 3 POSITION SAFE —

PROCESS ENGINEERING ESTIMATE - TRIAL AND PILOT SHEET

• SEQUENCE OF OPERATIONS •

D-22530

MODEL 40X COMPONENT STOCK PART NO. D-11701

DATE 1-9-75 COMPUTER KOWALSKI SHEET 1 OF 1

OPER. NO.	OPERATION NAME	MACHINE	DEPT. NO.	HOURS DESIGN	HOURS BUILD
	NOTE: SAME AS PRESENT STOCK ASSY EXCEPT FOR THE FOLLOWING OPERATION: —				
55	INLET TOP OF STOCK (SAME EXCEPT SAFETY CLEAR) SLOT IN LONGER	P&W INLETTER FIXTURE G-73008	ALTER	5	20
	TOTAL				

RD-0508 1-18-63

CONFIDENTIAL-SUBJECT TO PROTECTIVE ORDER
KINZER V. REMINGTON

- 3 POSITION SAFE -

PROCESS ENGINEERING ESTIMATE - TRIAL AND PILOT SHEET

• SEQUENCE OF OPERATIONS •

M/PRINT

MODEL 700-40X R C COMPONENT TRIGGER SIDE PLATE. RIGHT HAND PART NO. C-30780

DATE 1-6-73 COMPUTER KOWALSKI SHEET 1 OF 2

OPER NO.	OPERATION NAME	MACHINE	DEPT. NO.	HOURS DESIGN	HOURS BUILD
	NOTE:				
	PURCHASE FROM STAMPING VENDOR				
	EST PC/PIECE - $50.00 / M				
	EST TOOLING - $500.00				
	PURCHASE INSPECTION	BENCH - COMPARATOR			
		COMP SCREEN	NEW	8	-
		PLUG GA - (132-128 DIA)	STD.	-	-
		PINNING GA C-36471	ALTER	10	30
		BALANCE OF GAGES	A.U.	-	-
5	C'SINK SAFETY DETENT HOLE	1 SP DRILL PRESS			
		HOLDING BLOCK C-38420	ALTER	5	15
		C'SINK A-54497-V	AU	-	-
		~~AIRCRAFT~~ STOP	STD	-	-
		C'SINK GA C-84657	AU	-	-
		MASTER B-84659	AU	-	-
10	DEBURR DETENT HOLE (BOTH SIDES)	- BENCH - SAME AS PRESENT PART			
20	DEGREASE - CARBONITRIDE HARDEN - DEGREASE	" " "	"		
23	ASSEMBLD FOR UNDERG DRAW	" " "	"		
	TOTAL				

ND-0568 1-18-63

CONFIDENTIAL-SUBJECT TO PROTECTIVE ORDER
KINZER V. REMINGTON

– 3 POSITION SAFE –

PROCESS ENGINEERING ESTIMATE - TRI/ L AND PILOT SHEET

• SEQUENCE OF OPERATIONS •

MODEL 700- ~~40xC~~ 40xE COMPONENT TRIGGER SIDE PLATE - RIGHT PART NO. C.30780 M/PRINT

DATE 1-6-75 COMPUTER KOWALSKI HAND SHEET 2 OF 2

OPER NO.	OPERATION NAME	MACHINE	DEPT. NO.	HOURS DESIGN	HOURS BUILD
25	~~LINDBERG DRAW~~	SAME AS PRESENT PART			
27	DISASSEMBLE	" " "		"	
30	INSPECT FOR HARDNESS	" " "		"	
	TO TRIGGER HOUSING ASSEMBLY - DEPT 79				
	TOTAL				

RD-5558 1-18-69

CONFIDENTIAL-SUBJECT TO PROTECTIVE ORDER
KINZER V. REMINGTON

— 3-POSITION SAFE —

PROCESS ENGINEERING ESTIMATE - TRIAL AND PILOT SHEET

• SEQUENCE OF OPERATIONS •

MODEL 702-404R COMPONENT TRIGGER SIDE PLATE - (L.H.) (R.H.) PART NO. #30781

DATE 1-9-75 COMPUTER KOWALSKI SHEET 1 OF 1

OPER. NO.	OPERATION NAME	MACHINE	DEPT. NO.	HOURS DESIGN	HOURS BUILD
	NOTE:				
	A.U. FOR THIS	ESTIMATE -			
	TOTAL				

ED-6568 1-12-62

CONFIDENTIAL-SUBJECT TO PROTECTIVE ORDER
KINZER V. REMINGTON

— 3. POSITION SAFE —

PROCESS ENGINEERING ESTIMATE - TRIAL AND PILOT SHEET

• SEQUENCE OF OPERATIONS • (L. SIDE)

MODEL 100 COMPONENT TRIGGER SIDE PLATE - LEFT HAND PART NO. C-90558

DATE 1-3-73 COMPUTER KOWALSKI SHEET 1 OF 1

OPER. NO.	OPERATION NAME	MACHINE	DEPT. NO.	HOURS DESIGN	HOURS BUILD
	NOTE:				
	SAME AS TRIGGER SIDE PLATE" RIGHT HAND				
	# 30970 EXCEPT C'SINK SAFETY DETENT				
	HOLE ON OTHER SIDE —				
	TOTAL				

RD-6808 1-18-63

CONFIDENTIAL-SUBJECT TO PROTECTIVE ORDER
KINZER V. REMINGTON

- 3 Position Safe -

PROCESS ENGINEERING ESTIMATE - TRIAL AND PILOT SHEET

• SEQUENCE OF OPERATIONS •

26655-R

MODEL 700 COMPONENT Trigger Housing Assembly PART NO. 32905-L

DATE 1-23-73 COMPUTER Kowalski SHEET 1 OF 1

OPER. NO.	OPERATION NAME	MACHINE	DEPT. NO.	HOURS DESIGN	HOURS BUILD
	NOTE:				
	SAME AS PRESENT ASSEMBLY PROCESS —				
	TOTAL				

RD-0560 1-18-63

VINTAGE

CONFIDENTIAL-SUBJECT TO PROTECTIVE ORDER
KINZER V. REMINGTON

R2539491

- 3 POSITION SAFE -

PROCESS ENGINEERING ESTIMATE - TRIAL AND PILOT SHEET

• SEQUENCE OF OPERATIONS •

MODEL 40XR-XC COMPONENT TRIGGER HOUSING ASSEMBLY PART NO. C-30785

DATE 1-9-75 COMPUTER KOWALSKI SHEET 1 OF 1

OPER. NO.	OPERATION NAME	MACHINE	DEPT. NO.	HOURS DESIGN	HOURS BUILD
	NOTE:				
	SAME AS PRESENT ASSEMBLY PROCESS -				
	TOTAL				

RD-6566 1-19-63

WEIGEL

CONFIDENTIAL-SUBJECT TO PROTECTIVE ORDER
KINZER V. REMINGTON

Invention Report
No. IT- 300

R2539493

CONFIDENTIAL-SUBJECT TO PROTECTIVE ORDER
KINZER V. REMINGTON

L6-4879 REV. 10-63

DU PONT

ESTABLISHED 1802

E. I. DU PONT DE NEMOURS & COMPANY
INCORPORATED
WILMINGTON, DELAWARE 19898

LEGAL DEPARTMENT

cc: R.E. Fielitz - F&FP - B11218
W.H. Coleman - F&FP - Ilion

June 28, 1985

F. E. ~~Martin~~
F & FP ~~Department~~
Ilion

Patent Proposal FP-0045
A Fire Control for Bolt Action Rifles Having
a Trigger and Sear Block

Your Request to File a Patent Application dated December 10, 1982 has been given the above case number. The class code is 8FAO. Don Huntley will be handling your Request. Any questions or additional information should be directed to his attention.

J. T. Corle

JTC:jcb

Attachment

CONFIDENTIAL-SUBJECT TO PROTECTIVE ORDER
KINZER V. REMINGTON

RD-65-b

REMINGTON ARMS COMPANY, INC.

INTER-DEPARTMENTAL CORRESPONDENCE

Remington DUPONT PETERS DUPONT

"CONFINE YOUR LETTER TO ONE SUBJECT ONLY"

Ilion, New York
December 7, 1982

REMINGTON ARMS CO. INC.
RECEIVED
DEC 10 1982
PATENT DIVISION

FP-0045

Barry Estrin
Patent Department
Bridgeport

INVENTION REPORT NO. IT-300
A FIRE CONTROL FOR BOLT ACTION
RIFLES HAVING A TRIGGER AND
SEAR BLOCK

FRED E. MARTIN
BOX 599, RD #2, DUTCH HILL ROAD
FRANKFORT, NEW YORK 13340

REASON FOR DEVELOPMENT

A fire control featuring a sear block along with a trigger block was developed to eliminate unwanted trigger movement when the safety is in the on safe position.

THE PROBLEM

A major problem with present fire controls used in bolt action rifles has been unwanted and unnecessary trigger movement when the safety is in the on safe position.

The trend has been to allow this movement to exist unless specifically addressed by the use of a trigger block safety. A trigger block safety was used on the early Remington M/788.

CONFIDENTIAL-SUBJECT TO PROTECTIVE ORDER
KINZER V. REMINGTON

Other safeties in use are the firing pin block used by U.S. Repeating Arms (Winchester) and Weatherby.

SUMMARY OF INVENTION

The trigger block plunger has an enlarged tip that is depressed by the safety into a recess in the trigger when in the on safe position. The plunger releases the trigger by seating in a conical recess in the safety lever in the fire position. The plunger is mounted thru the trigger and housing and is spring loaded to the unblocked position.

INVENTION DISCLOSURE

Completely assembled this unit consists of the present trigger housing assembly modified to accept the plunger, the trigger altered to have a thru clearance-hole and blocking recess, a compression spring to actuate the plunger, a newly designed safety lever, and the trigger block plunger.

PRIOR ART

To the writer's knowledge there are no fire controls that have a trigger block passing thru the trigger.

This system was designed for Bolt Action Rifles to eliminate unnecessary trigger movement, and may be adapted to Remington's present line.

Fred E. Martin Date
Ilion Research Division

FEM:ws

CONFIDENTIAL-SUBJECT TO PROTECTIVE ORDER
KINZER V. REMINGTON

RD-C-8

REMINGTON ARMS COMPANY, INC.

INTER-DEPARTMENTAL CORRESPONDENCE

Remington DUPONT PETERS DUPONT

"CONFINE YOUR LETTER TO ONE SUBJECT ONLY"

Fred,
Looks good. I have no problems with this writing.
Tom

Ilion, New York
December 7, 1982

Barry Estrin
Patent Department
Bridgeport

INVENTION REPORT NO. IT-300
A FIRE CONTROL FOR BOLT ACTION
RIFLES HAVING A TRIGGER AND
SEAR BLOCK

FRED E. MARTIN
BOX 599, RD #2, DUTCH HILL ROAD
FRANKFORT, NEW YORK 13340

REASON FOR DEVELOPMENT

A fire control featuring a sear block along with a trigger block was developed to eliminate unwanted trigger movement when the safety is in the on safe position.

THE PROBLEM

A major problem with present fire controls used in bolt action rifles has been unwanted and unnecessary trigger movement when the safety is in the on safe position.

The trend has been to allow this movement to exist unless specifically addressed by the use of a trigger block safety. A trigger block safety was used on the early Remington M/788.

CONFIDENTIAL-SUBJECT TO PROTECTIVE ORDER
KINZER V. REMINGTON

Other safeties in use are the firing pin block used by U.S. Repeating Arms (Winchester) and Weatherby.

SUMMARY OF INVENTION

The ~~trigger~~ block plunger has an enlarged tip that is depressed by the safety into a recess in the trigger when in the on safe position. The plunger releases the trigger by seating in a conical recess in the safety lever in the fire position. The plunger is mounted thru the trigger and housing and is spring loaded to the unblocked position.

INVENTION DISCLOSURE

Completely assembled this unit consists of the present trigger housing assembly modified to accept the plunger, the trigger altered to have a thru clearance-hole and blocking recess, a compression spring to actuate the plunger, a newly designed safety lever, and the trigger block plunger.

PRIOR ART

To the writer's knowledge there are no fire controls that have a trigger block passing thru the trigger.

This system was designed for Bolt Action Rifles to eliminate unnecessary trigger movement, and may be adapted to Remington's present line.

Fred E. Martin Date
Ilion Research Division

FEM:ws

CONFIDENTIAL-SUBJECT TO PROTECTIVE ORDER
KINZER V. REMINGTON

RD-49-B

REMINGTON ARMS COMPANY, INC.

INTER-DEPARTMENTAL CORRESPONDENCE

Remington DUPONT PETERS DUPONT

"CONFINE YOUR LETTER TO ONE SUBJECT ONLY"

Fred,
Looks good. I have no problems with this wording.
Tami

Ilion, New York
December 7, 1982

Barry Estrin
Patent Department
Bridgeport

INVENTION REPORT NO. IT-300
A FIRE CONTROL FOR BOLT ACTION
RIFLES HAVING A TRIGGER AND
SEAR BLOCK

FRED E. MARTIN
BOX 599, RD #2, DUTCH HILL ROAD
FRANKFORT, NEW YORK 13340

REASON FOR DEVELOPMENT

A fire control featuring a sear block along with a trigger block was developed to eliminate unwanted trigger movement when the safety is in the on safe position.

THE PROBLEM

A major problem with present fire controls used in bolt action rifles has been unwanted and unnecessary trigger movement when the safety is in the on safe position.

The trend has been to allow this movement to exist unless specifically addressed by the use of a trigger block safety. A trigger block safety was used on the early Remington M/788.

CONFIDENTIAL-SUBJECT TO PROTECTIVE ORDER
KINZER V. REMINGTON

Other safeties in use are the firing pin block used by U.S. Repeating Arms (Winchester) and Weatherby.

SUMMARY OF INVENTION

The trigger block plunger has an enlarged tip that is depressed by the safety into a recess in the trigger when in the on safe position. The plunger releases the trigger by seating in a conical recess in the safety lever in the fire position. The plunger is mounted thru the trigger and housing and is spring loaded to the unblocked position.

INVENTION DISCLOSURE

Completely assembled this unit consists of the present trigger housing assembly modified to accept the plunger, the trigger altered to have a thru clearance-hole and blocking recess, a compression spring to actuate the plunger, a newly designed safety lever, and the trigger block plunger.

PRIOR ART

To the writer's knowledge there are no fire controls that have a trigger block passing thru the trigger.

This system was designed for Bolt Action Rifles to eliminate unnecessary trigger movement, and may be adapted to Remington's present line.

Fred E. Martin Date
Ilion Research Division

FEM:ws

CONFIDENTIAL-SUBJECT TO PROTECTIVE ORDER
KINZER V. REMINGTON

RD-69-B

REMINGTON ARMS COMPANY, INC.

INTER-DEPARTMENTAL CORRESPONDENCE

Remington DUPONT PETERS DUPONT

"CONFINE YOUR LETTER TO ONE SUBJECT ONLY"

Ilion, New York
December 7, 1982

Barry Estrin
Patent Department
Bridgeport

INVENTION REPORT NO. IT-300
A FIRE CONTROL FOR BOLT ACTION
RIFLES HAVING A TRIGGER AND
SEAR BLOCK

FRED E. MARTIN
BOX 599, RD #2, DUTCH HILL ROAD
FRANKFORT, NEW YORK 13340

REASON FOR DEVELOPMENT

A fire control featuring a sear block along with a trigger block was developed to eliminate unwanted trigger movement when the safety is in the on safe position.

THE PROBLEM

A major problem with present fire controls used in bolt action rifles has been unwanted and unnecessary trigger movement when the safety is in the on safe position.

The trend has been to allow this movement to exist unless specifically addressed by the use of a trigger block safety. A trigger block safety was used on the early Remington M/788.

CONFIDENTIAL-SUBJECT TO PROTECTIVE ORDER
KINZER V. REMINGTON

Other safeties in use are the firing pin block used by U.S. Repeating Arms (Winchester) and Weatherby.

SUMMARY OF INVENTION

The trigger block plunger has an enlarged tip that is depressed by the safety into a recess in the trigger when in the on safe position. The plunger releases the trigger by seating in a conical recess in the safety lever in the fire position. The plunger is mounted thru the trigger and housing and is spring loaded to the unblocked position.

INVENTION DISCLOSURE

Completely assembled this unit consists of the present trigger housing assembly modified to accept the plunger, the trigger altered to have a thru clearance-hole and blocking recess, a compression spring to actuate the plunger, a newly designed safety lever, and the trigger block plunger.

PRIOR ART

To the writer's knowledge there are no fire controls that have a trigger block passing thru the trigger.

This system was designed for Bolt Action Rifles to eliminate unnecessary trigger movement, and may be adapted to Remington's present line.

Fred E. Martin Date
Ilion Research Division

FEM:ws

CONFIDENTIAL-SUBJECT TO PROTECTIVE ORDER
KINZER V. REMINGTON

BOLT LOCK

RD-69 REV. 6-58

REMINGTON ARMS COMPANY, INC.

INTER-DEPARTMENTAL CORRESPONDENCE

Remington DUPONT

CC: C. B. WORKMAN
J. S. MARTIN

BRIDGEPORT, CONN.

NOV. 5, 1980

FRED MARTIN

SUBJECT: BOLT LOCK FOR BOLT-ACTION RIFLES

A patent search has been made on the bolt lock shown in your Assembly Drawing SK-D-3596, and the corresponding detail drawings. The following are the most closely related prior patents that were located. In my opinion, they should not prevent us from securing a patent on your design.

1,669,496 - Stahl
1,322,514 - Bader

Stahl has a locking bolt 14 rotatably mounted in a transverse bore and passing across a flat 15 milled in the firing pin. When the firing pin is cocked as in Fig. 4, the forward end of the firing pin flat engages a mating flat on the locking bolt to prevent it from rotating. A detent pin 19 on the locking bolt (see Figs. 1 and 2) then restrains the bolt handle from being raised. However, the detent pin can be manually released by pressing a spring-loaded finger piece 21 (Figs. 1, 2 and 7). On firing, the locking bolt 14 is released by the firing pin, and is rotated out of locking engagement with the bolt handle simply by applying an upward pressure of the bolt handle on the detent pin 19.

Bader slidably mounts a detent 9 on a bolt plug or sleeve 5 to engage (Fig. 4) or disengage (Fig. 5) the bolt handle. A J-shaped pivoting lever 13 is spring-biased in a direction to normally engage the detent with the bolt handle. The detent 9 may be withdrawn to unlock the bolt either by manual rotation of the lever 13 when the firing pin is cocked, or by engagement with a shoulder 24 on the firing pin when the rifle is fired.

Bill Ericson

WILLIAM L. ERICSON
SENIOR PATENT COUNSEL

WLE/dt

48.50

CONFIDENTIAL-SUBJECT TO PROTECTIVE ORDER
KINZER V. REMINGTON

CLASS 42 SUBCLASS 70

142

Remington Arms U.M.C. Co

W

G. A. BADER.

GUN.

APPLICATION FILED MAY 23, 1919.

1,322,514.

Patented Nov. 25, 1919.

2 SHEETS—SHEET 1.

Fig. 1

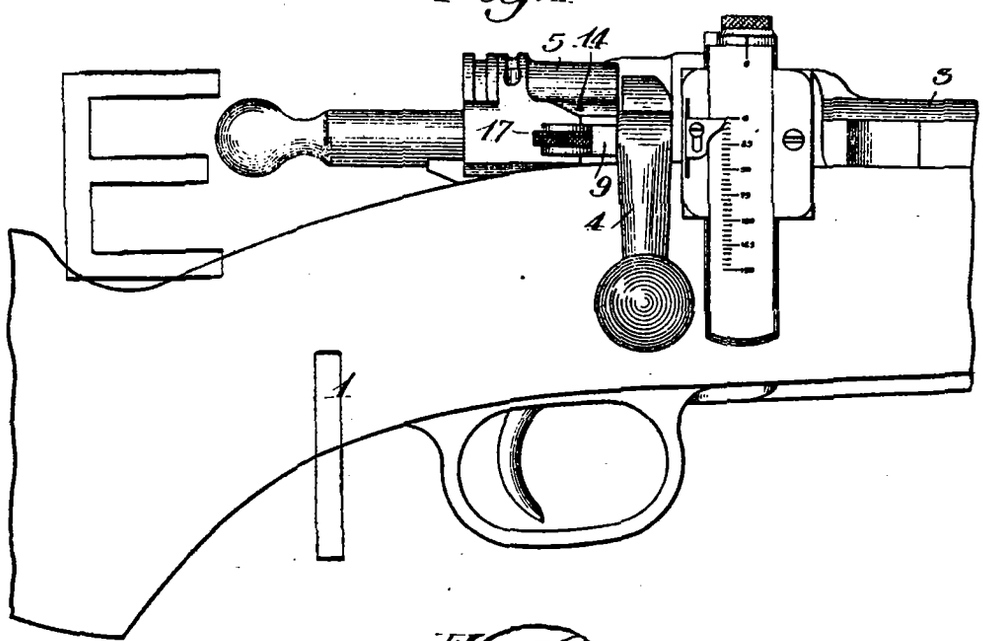

Fig. 2

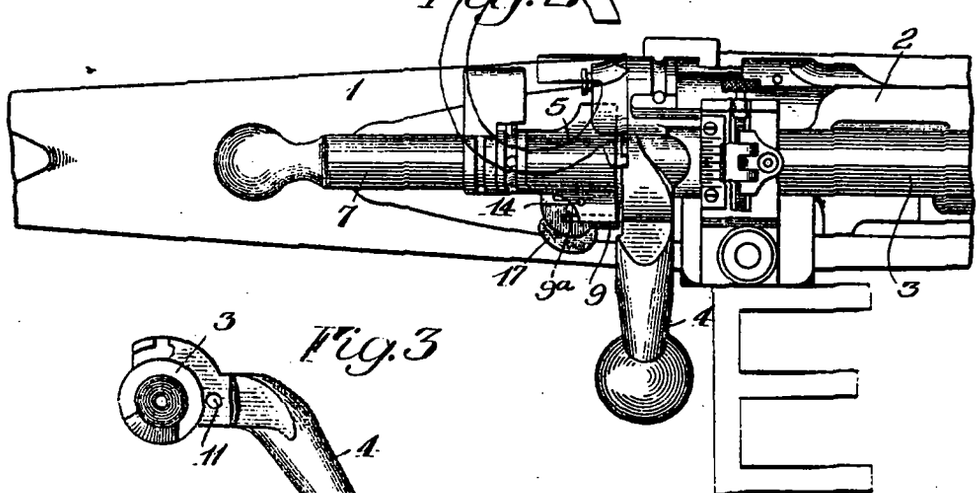

Fig. 3

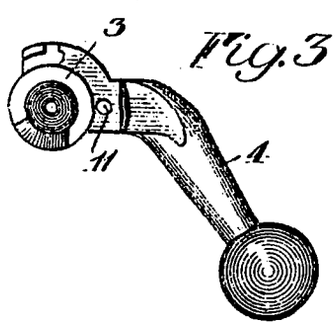

INVENTOR
Gustav A. Bader
BY
Davis & Simms
ATTORNEY

CONFIDENTIAL-SUBJECT TO PROTECTIVE ORDER
KINZER V. REMINGTON

R2539505

G. A. BADER.

GUN.

APPLICATION FILED MAY 23, 1919.

1,322,514. Patented Nov. 25, 1919.

2 SHEETS—SHEET 2.

Fig. 4

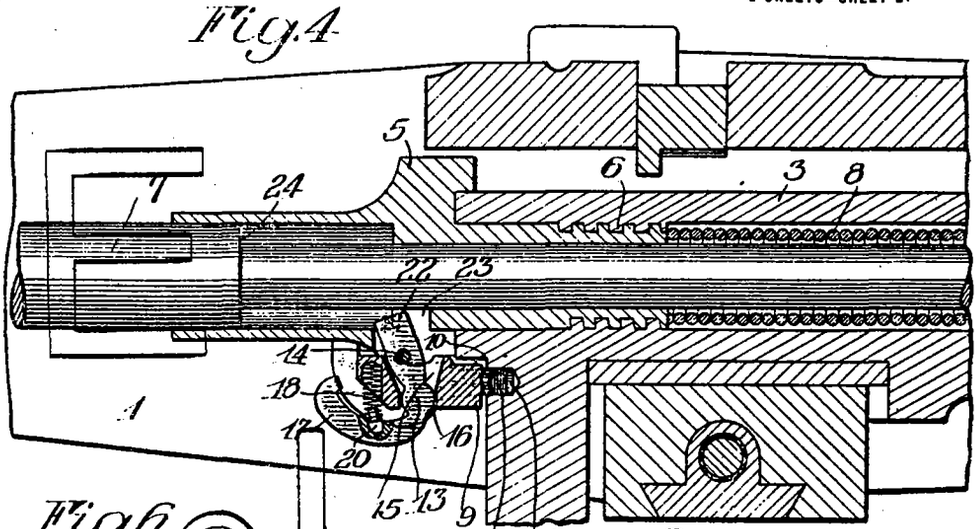

Fig. 6

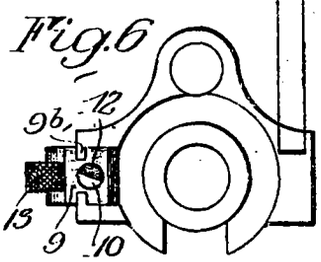

Fig. 7

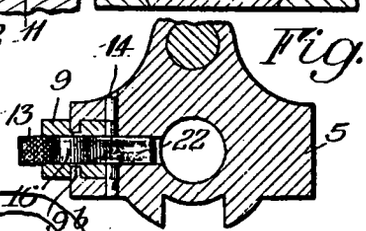

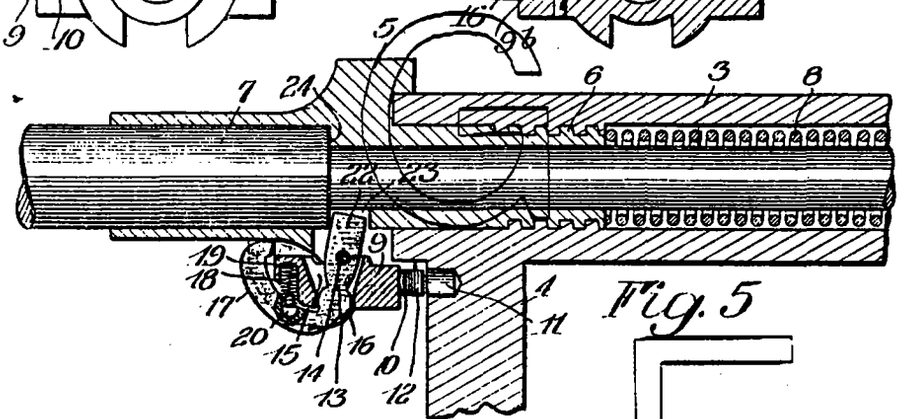

Fig. 5

Fig. 8

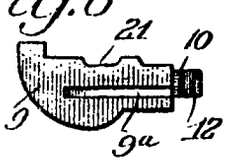

INVENTOR

Gustav A. Bader

BY

Davis & Simms

ATTORNEY

CONFIDENTIAL-SUBJECT TO PROTECTIVE ORDER
KINZER V. REMINGTON

R2539506

UNITED STATES PATENT OFFICE.

GUSTAV A. BADER, OF ROCHESTER, NEW YORK.

GUN.

1,322,514. Specification of Letters Patent. Patented Nov. 25, 1919.

Application filed May 23, 1919. Serial No. 299,103.

To all whom it may concern:

Be it known that I, GUSTAV A. BADER, a citizen of the United States, and resident of Rochester, in the county of Monroe and State of New York, have invented certain new and useful Improvements in Guns, of which the following is a specification.

The present invention relates more particularly to the type of guns in which a reciprocatory bolt mechanism carries a spring pressed firing pin and is provided with a portion which rotates to lock the bolt mechanism in firing position, an object of this invention being to lock the rotary part of the bolt mechanism against movement while in firing position and preferably to control such locking means automatically through the firing of the gun.

To this and other ends, the invention consists of certain parts and combinations of parts all of which will be hereinafter described, the novel features being pointed out in the appended claims.

In the drawings:

Figure 1 is a fragmentary side view of a gun equipped with the present invention;

Fig. 2 is a fragmentary top view of said gun;

Fig. 3 is a rear view of the breech bolt;

Fig. 4 is a horizontal sectional view through a portion of the gun in the plane of the axis of the firing pin showing the locking device locking the breech bolt in closed position;

Fig. 5 is a detail sectional view of the firing pin engaging the locking device and holding said locking device out of connection with the breech bolt;

Fig. 6 is a detail view of the sleeve which connects with the rear end of the breech bolt;

Fig. 7 is a vertical transverse section through said sleeve showing the manner in which the locking device is mounted on the sleeve; and

Fig. 8 is a detail view of one member of the locking device.

The invention herein is illustrated in the U. S. magazine rifle, model of 1903, which is described in publication #1923 of the Ordnance Department U. S. A., revised February 14, 1908, entitled "*Description and Rules for the Management of the U. S. Magazine Rifle, Model of 1903, Caliber .30*," and reference may be had to this publication for any parts of the rifle which are not herein shown as it is unnecessary to illustrate in detail such a rifle in view of the fact that the invention is confined to an addition to the same. It will be understood however, that the invention is not limited to a rifle such as shown in the above mentioned publication but may be embodied in any construction where similar results are desired.

In rifles of the type mentioned, unless the bolt handle is turned fully down, the cam on the cocking piece will strike the cocking cam on the bolt and the energy of the main spring will be expended in closing the bolt, instead of on the primer; this prevents the possibility of a cartridge being fired until the bolt is fully closed, (see page 30 of the publication above referred to). In most instances, the bolt handle is turned fully down but is afterward unintentionally and unknowingly shifted slightly in an upward direction so that when the trigger is pulled the firing does not take place. It will be readily understood that this is not only a disadvantage to an army in battle but it is also a disadvantage to a hunter who, after roaming many hours, and may be days, meets game only to lose it through misfire due to the upward shifting of the bolt handle of which he had no knowledge. According to this invention the turning of the rotary part of the bolt mechanism is prevented by a locking device which automatically enters into locking position to lock the rotary portion of the bolt mechanism, this locking device being automatically shifted out of locking position when the gun is fired.

Referring to the embodiment of the invention herein shown, 1 indicates the stock of the gun and 2 the receiver on which the bolt mechanism is reciprocable. This mechanism comprises in this instance a breech block 3 reciprocable and rotatable in the well of the receiver and interlocking with the receiver by a rotary movement under the action of the handle 4, a sleeve 5 being guided on the receiver to be held against turning with the bolt and having a screw threaded connection 6 with the bolt. Carried by the sleeve and the breech bolt is a firing pin 7 which is acted upon by a main spring 8 of helical formation surrounding the firing pin. The foregoing parts are the known parts of the U. S. magazine rifle above mentioned.

CONFIDENTIAL-SUBJECT TO PROTECTIVE ORDER
KINZER V. REMINGTON

R2539507

As before pointed out, the handle 4 on the breech bolt 3 is shifted accidentally at times away from its lowered position where it locks the breech bolt to the receiver, thus causing the energy of the main spring of the firing pin to be used up in closing the bolt instead of acting on the primer with full force. According to the illustrated embodiment of this invention, means is provided for locking the breech bolt in its innermost position interlocked with the receiver. This means in this instance comprises a detent 9 preferably slidably mounted on the sleeve 5 at one side of the latter by forming grooves 9a in the upper and lower surfaces of the detent and projecting ribs 9b on the sleeve to fit into said grooves 9a. This detent may have a nose 10 adapted to enter a recess or notch 11 formed in the rear face of the bolt arm 4, the uppermost face of the nose 10 being beveled at 12 so that when the bolt arm 4 is swung to its lowermost position, it will coöperate with the cam face 12 and move the latter rearwardly, after which the detent 9 will move under the action of a spring to be described, so that the nose 10 enters into the notch 11 and locks the bolt arm 4 in its lowermost position so that the bolt is held interlocked with the receiver.

The detent 9 may be controlled either manually or automatically, the latter being accomplished preferably through the firing pin 7. To these ends, a lever 13 may be pivotally mounted at 14 in the sleeve 5 and extend through an opening 15 in the detent 9, the lever having on opposite sides curved faces 16 acting as curved bearings for engaging opposite walls of the opening 15. On the outer side of the detent, the lever 13 may have a curved arm 17 and between this arm 17 and the detent, a helical spring 18 may be arranged, said spring being received within a pocket 19 in the detent 9 and a rocking projection 20 on the inner face of the arm 17. It will be apparent that this spring 18 acts on the operating lever 13 to shift the latter in a direction to move the detent 9 toward the arm 4 of the breech bolt 3. The pivot pin 14 may act as a stop for limiting the movement of the detent 9 and to this end the inner face of the detent is provided above and below the lever 13 with notches 21 in which the pivot pin 14 is received, the ends of these notches serving to limit the movement of the detent 9 on the guides of the sleeve 5. It will thus be apparent that the pin 14 not only holds the lever 13 to the sleeve 5 but also retains the detent on the sleeve 5 and therefore the removal of this pin 14 permits the removal of the two parts as well as the spring arranged between such parts.

The control of the detent 9 through the firing pin is preferably effected by providing an extension 22 on the lever 13 which projects through an opening 23 in the sleeve into the path of the usual shoulder 24 on the firing pin. When the firing pin is in its innermost position in the sleeve 5, this shoulder 24 engages the extension 22 of the lever 13 and moves the lever 13 in a direction to carry the detent out of interlocking connection with the arm 4 of the breech bolt, as will be seen more clearly by referring to Fig. 5 of the drawings, thus permitting the breech bolt to be rotated to become unlocked from the receiver in order that the bolt, the sleeve and the firing pin may be moved rearwardly after the firing pin is cocked. The shoulder 24 moves away from the extension 22 permitting the end 22 to shift rearwardly under the action of the spring 18 and in this way to project the detent 9 forwardly so that when the arm 4 of the breech bolt is moved downwardly, it will coöperate with the beveled end 12 of the detent shifting the latter to the rear so that the nose 10 may enter into the notch 11, thus locking the arm 4 of the breech bolt in the lower position. In this position of the detent it may be moved rearwardly manually by pressing on the extension 17 of the lever 13 or it may be moved rearwardly automatically by shifting the firing pin to its innermost position in the sleeve 5, when the shoulder 24 will engage the lever extension 22 and through the lever shift the detent 9 to the rear.

From the foregoing it will be seen that there has been provided a locking device which locks the rotary part of the bolt mechanism in interlocking connection with the receiver, thus preventing the accidental shifting of the bolt mechanism to an inoperative position. This locking device is controllable either manually or automatically so as to release the bolt mechanism. The automatic control is preferably effected through the firing of the gun due preferably to the shifting of the firing pin in firing, the firing pin engaging with a lever which shifts the detent out of locking position.

What I claim as my invention and desire to secure by Letters Patent is:

1. A firearm of the type in which the breech mechanism has a sliding movement in the receiver and a portion which rotates to lock the mechanism in firing position, distinguished by a locking device which locks the rotary part against rotary movement, and is operated automatically to release the rotating part on the firing of the gun.

2. A firearm of the type having a reciprocatory bolt mechanism provided with a firing pin movable with said bolt mechanism and also relatively thereto and also with a portion rotatable to lock the bolt mechanism in firing position, distinguished by a locking device for locking the rotary portion against rotary movement, said locking

CONFIDENTIAL-SUBJECT TO PROTECTIVE ORDER
KINZER V. REMINGTON
R2539508

device being controlled by the firing pin to release the rotary portion on the firing of the gun.

3. A firearm of the type having a reciprocatory bolt, a sleeve reciprocating with said breech bolt but held against rotation with the bolt, distinguished by a locking device which is carried by the sleeve, coöperates with the breech bolt to hold the latter against rotation and is operated automatically on the firing of the gun to release the breech bolt.

4. A firearm of the type having a rotary and reciprocatory breech bolt, a sleeve reciprocating with the bolt but held against rotation therewith, and a firing pin moving with the sleeve and the breech bolt and also relatively to said parts, distinguished by a locking device for holding the breech bolt against rotation, said locking device being mounted upon the sleeve and controlled by the firing pin.

5. A firearm comprising a rotary and reciprocatory breech bolt, a sleeve reciprocating with the bolt but held against rotation with said bolt, a firing pin reciprocating with the sleeve and the bolt and also movable relatively to said parts, a detent slidably mounted upon the sleeve and adapted to coöperate with the breech bolt to hold the latter against turning, and a lever mounted on the sleeve and having a manually operable portion and also a portion arranged to be operated by the firing pin.

GUSTAV A. BADER.

WEIGEL

CONFIDENTIAL-SUBJECT TO PROTECTIVE ORDER
KINZER V. REMINGTON

R2539509

CLASS 42 70
PATENT DEPARTMENT
REMINGTON ARMS CO. INC.

161

May 15, 1928.

E. R. STAHL

BOLT ACTION GUN

Filed Aug. 12, 1927

1,669,496

3 Sheets-Sheet 1

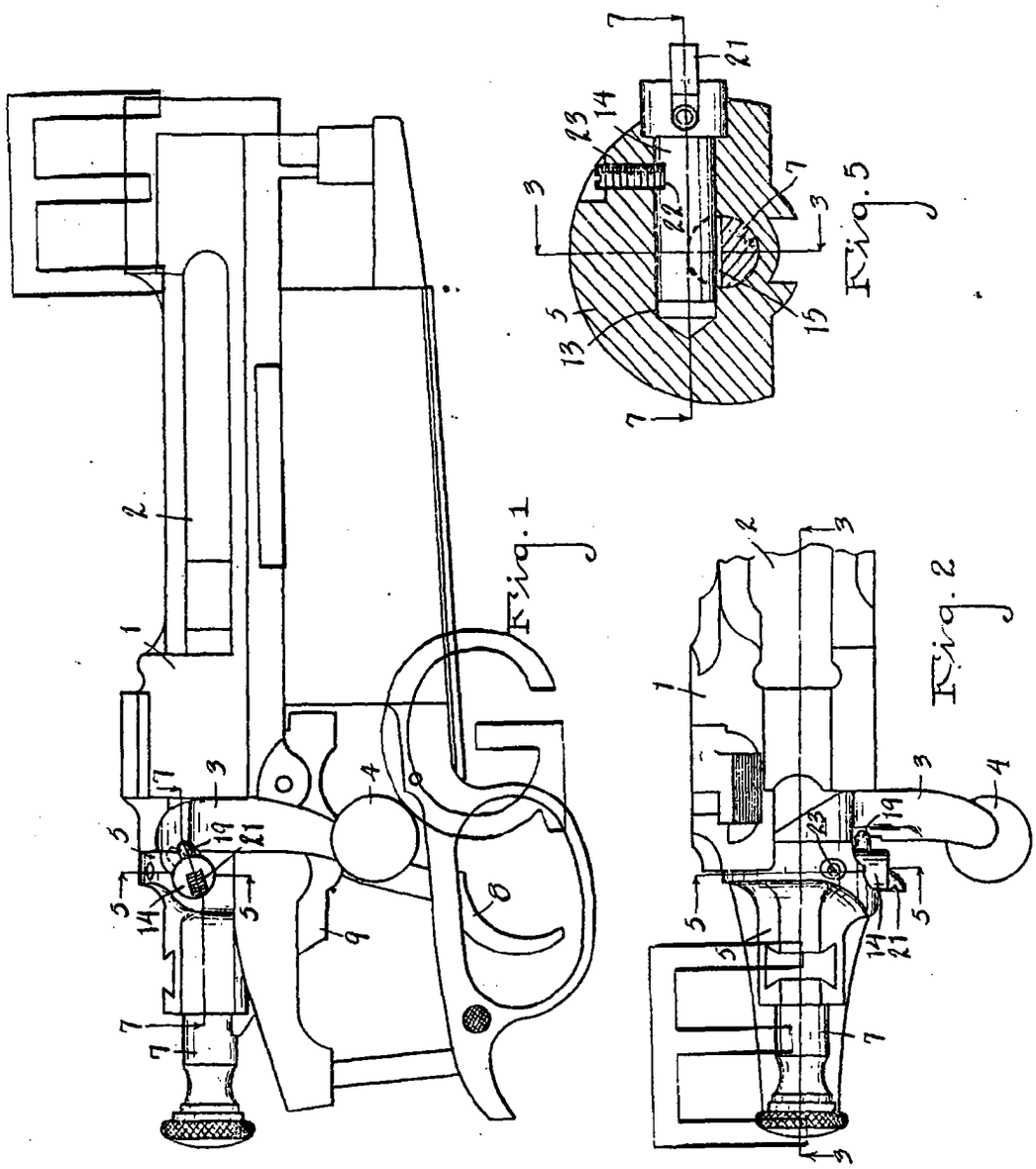

INVENTOR
Elmer R. Stahl
BY Chappell & Earl
ATTORNEYS

CONFIDENTIAL-SUBJECT TO PROTECTIVE ORDER
KINZER V. REMINGTON

R2539510

May 15, 1928. 1,669,496

E. R. STAHL

BOLT ACTION GUN

Filed Aug. 12, 1927 3 Sheets-Sheet 2

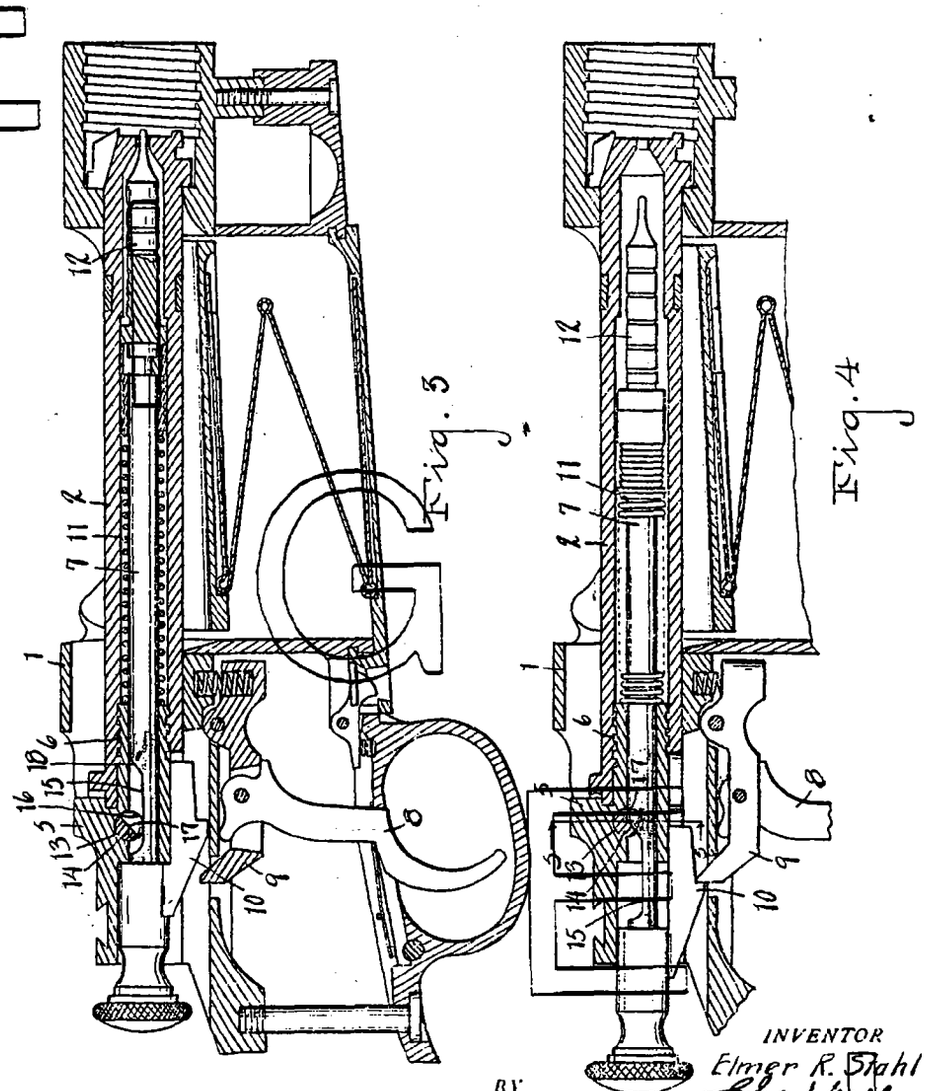

INVENTOR
Elmer R. Stahl
BY Chappell
and Earl
ATTORNEYS

CONFIDENTIAL-SUBJECT TO PROTECTIVE ORDER
KINZER V. REMINGTON
R2539511

May 15, 1928. 1,669,496

E. R. STAHL

BOLT ACTION GUN

Filed Aug. 12, 1927 3 Sheets-Sheet 3

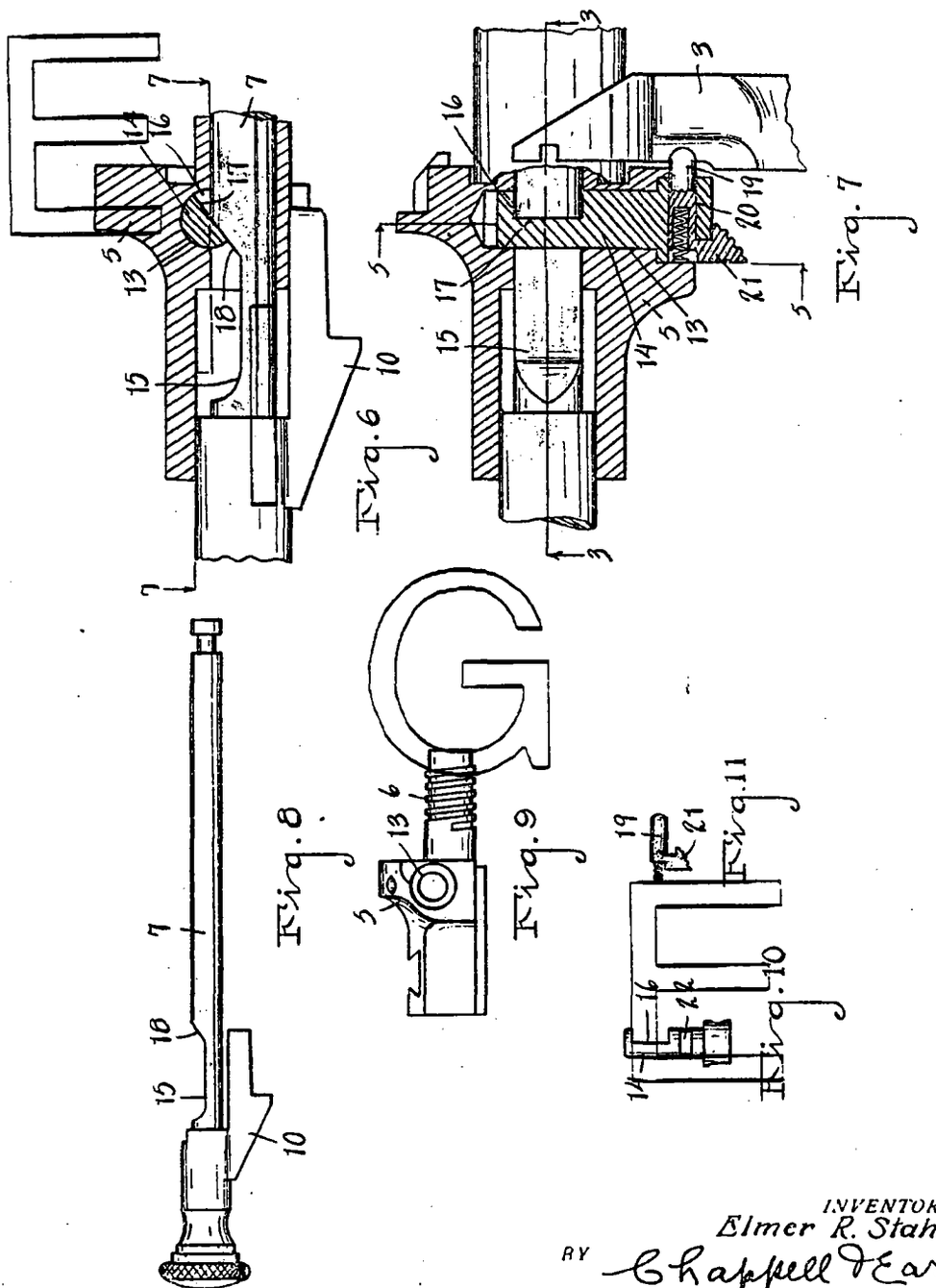

INVENTOR
Elmer R. Stahl
BY Chappell & Earl
ATTORNEYS

CONFIDENTIAL-SUBJECT TO PROTECTIVE ORDER
KINZER V. REMINGTON

Patented May 15, 1928. **1,669,496**

UNITED STATES PATENT OFFICE.

ELMER R. STAHL, OF DOWAGIAC, MICHIGAN.

BOLT-ACTION GUN.

Application filed August 12, 1927. Serial No. 212,492.

The main objects of this invention are:

First, to provide a bolt locking means for bolt action guns in which the flight of the firing pin is away from and unimpeded by the locking means.

Second, to provide a breech bolt locking means which is automatic in its operation.

Third, to provide an automatic breech bolt locking means which is capable of manual release.

Fourth, to provide a breech bolt locking means in which the parts are comparatively simple and are so formed and supported that they are not likely to be injured or rendered inoperative in use by severe or careless manipulation of the gun.

Objects relating to details and economies of construction and operation of my invention will definitely appear from the detailed description to follow.

The invention is defined and pointed out in the claims.

A structure which is a preferred embodiment of my invention is illustrated in the accompanying drawing, forming a part of this application, in which:

Fig. 1 is a side elevation of a gun action embodying the features of my invention, the stock and barrel and magazine being omitted.

Fig. 2 is a fragmentary plan view.

Fig. 3 is a longitudinal section on a line corresponding to line 3—3 of Figs. 2, 5 and 7, certain parts being shown in full lines for convenience in illustration, the firing pin being in firing position.

Fig. 4 is a fragmentary longitudinal section corresponding to Fig. 3 with the firing pin in retracted position.

Fig. 5 is a transverse section on line 5—5 of Figs. 1, 2, 4, and 7.

Fig. 6 is an enlarged detail partially in longitudinal section showing the firing pin in retracted or set position, with the breech bolt locking bolt in locking relation thereto.

Fig. 7 is a detail view partially in longitudinal section on line 7—7 of Figs. 1, 5 and 6.

Fig. 8 is a side elevation of the firing pin with its plunger removed.

Fig. 9 is a side elevation of the non-rotating portion of the breech bolt.

Fig. 10 is a plan view of the locking bolt.

Fig. 11 is a plan view of the locking bolt detent and its spring.

In the drawing similar reference characters refer to similar parts throughout the several views, and the sectional views are taken looking in the direction of the little arrows at the ends of the section lines.

Referring to the drawings, 1 represents the body or receiver portion of the breech bolt action. This is a standard commercial type and its structural details need not, therefore, be described.

The breech bolt 2 is mounted in the receiver for reciprocating and rotary movement as is common with gun actions of this type, the bolt being provided with a laterally projecting arm 3 having a hand piece 4 at its outer end.

The breech bolt sleeve 5 is non-rotatably supported for reciprocating movement with the barrel portion of the breech bolt, having threaded engagement therewith at 6.

The firing pin 7 is supported in the breech bolt and its sleeve for movement independently thereof. The trigger 8 is hung from the sear 9 which engages the keeper 10 of the firing pin when the firing pin is retracted or set, as shown in Fig. 4.

The firing pin is provided with an actuating spring 11 and a tappet or plunger 12.

The sleeve 5 is provided with a transverse bore 13 to receive and rotatably support the locking bolt 14, the firing pin having an elongated recess 15 to receive this bolt, the bore 13 in part intersecting the firing pin bore 15 in the sleeve 5.

The locking bolt has a segmental recess 16 which permits limited movement thereof and provides a flat face 17 coacting with the forwardly inclined shoulder 18 at the forward end of the recess 15 when the parts are in locking position, the firing pin in this position, as shown in Fig. 4, serving as a detent to support the locking bolt against rotation in releasing direction.

The locking bolt is provided with a detent 19 reciprocatingly mounted in a transverse bore 20 in the locking bolt, shown in Fig. 7, to coact with the arm 3 on the breech bolt. This detent is provided with a finger piece 21 which permits manual releasing of the detent should occasion require.

The locking bolt has a transverse kerf-like recess 22 engaged by the retaining screw 23 for holding the parts in assembled position.

With the parts thus arranged, when the

CONFIDENTIAL-SUBJECT TO PROTECTIVE ORDER
KINZER V. REMINGTON

breech bolt is actuated to set the trigger, the shoulder 18 of the firing pin is brought into engagement with the locking bolt, serving as a detent to support it against rotation, the parts being then in position shown in Figs. 4, 6 and 7, the arm 3 being engaged by the detent 19 and thereby locked in its initial position so that the breech bolt cannot be accidentally removed in position to impede the flight of the firing pin.

It will be observed that while the firing pin constitutes an element of the locking means, its flight is away from the locking means so that its movement is not impeded by the locking means, its movement in fact being entirely free or independent from such locking means.

I have illustrated and described my improvements in an embodiment which is highly practical. I have not attempted to illustrate or describe other embodiments or adaptations as I believe this disclosure will enable those skilled in the art to embody or adapt my improvements as may be desired.

Having thus described my invention, what I claim as new and desire to secure by Letters Patent, is:

1. In a firearm, the combination of a receiver, a breech bolt mounted for reciprocating and rotary movement in said receiver and provided with a laterally projecting arm, a non-rotatable sleeve mounted to reciprocate with said bolt, a firing pin operatively associated with said breech bolt and sleeve, a locking bolt rotatably mounted in said sleeve transversely of said firing pin, said firing pin having a transverse recess to receive said locking bolt, the front end of said recess being forwardly inclined providing a locking shoulder, said locking bolt having a transverse recess to receive said firing pin, the face of said recess being engaged by the said locking shoulder of the firing pin when the firing pin is in set position, and a spring actuated reciprocating detent disposed transversely of said locking bolt to engage said breech bolt arm when it is in its initial position, said detent being provided with a finger piece permitting the releasing of said breech bolt.

2. In a firearm, the combination of a receiver, a breech bolt mounted for reciprocating and rotary movement in said receiver and provided with a laterally projecting arm, a non-rotatable sleeve mounted to reciprocate with said bolt, a firing pin operatively associated with said breech bolt and sleeve, a locking bolt rotatably mounted in said sleeve transversely of said firing pin, said firing pin having a transverse recess to receive said locking bolt, said locking bolt having a transverse recess to receive said firing pin, and a spring actuated reciprocating detent disposed transversely of said locking bolt to engage said breech bolt arm when it is in its initial position, said detent being provided with a finger piece permitting the releasing of said breech bolt.

3. In a firearm, the combination of a receiver, a breech bolt mounted for reciprocating and rotary movement in said receiver, a non-rotatable sleeve mounted to reciprocate with said bolt, a firing pin operatively associated with said breech bolt and sleeve, and means for locking said breech bolt comprising a locking bolt rotatably mounted in said sleeve transversely of said firing pin, said firing pin having a transverse recess to receive said locking bolt, the front end of said recess providing a locking shoulder, said locking bolt having a transverse recess to receive said firing pin, the face of said recess being engaged by the locking bolt of the firing pin when the firing pin is in set position.

4. In a firearm, the combination of a receiver, a breech bolt mounted for reciprocating and rotary movement in said receiver and provided with a laterally projecting arm, a non-rotatable sleeve mounted to reciprocate with said bolt, a firing pin operatively associated with said breech bolt and sleeve, and a locking bolt rotatably mounted in said sleeve transversely of said firing pin to be engaged by the firing pin when the firing pin is in set position, said locking bolt having a spring actuated detent disposed to engage said breech bolt arm when it is in its initial position, said detent being manually releasable.

5. In a firearm, the combination of a receiver, a breech bolt mounted for reciprocating and rotary movement in said receiver, a non-rotatable sleeve mounted to reciprocate with said bolt, a firing pin operatively associated with said breech bolt and sleeve, and a locking member for said breech bolt rotatably mounted in said sleeve transversely of said firing pin to be engaged by the firing pin when the firing pin is in set position.

6. A firearm comprising a rotary and reciprocatory breech bolt, a non-rotating sleeve reciprocating with the bolt, a firing pin reciprocating with the sleeve and bolt and movable relative to said parts, and means for locking said bolt in firing position comprising a locking member mounted on said sleeve to cooperate with said bolt, said firing pin cooperating with said locking member to hold the same in bolt locking position when the firing pin is in set position, the flight of the pin being away from said locking means whereby its movement is unimpeded by the locking means.

7. In a firearm, the combination of a receiver, a breech bolt mounted for reciprocating and rotary movement in said receiver, a non-rotatable sleeve mounted to reciprocate with said bolt, a firing pin operatively associated with said breech bolt and sleeve,

CONFIDENTIAL-SUBJECT TO PROTECTIVE ORDER
KINZER V. REMINGTON

and a locking member for said breech bolt mounted in said sleeve to be engaged by the firing pin when the firing pin is in set position.

8. A firearm comprising a rotary and reciprocatory breech bolt, a non-rotating sleeve reciprocating with the bolt, a firing pin operatively associated with said bolt and sleeve and movable relative thereto, and means for locking said breech bolt in firing position comprising a locking member mounted on said sleeve to cooperate with said breech bolt, said firing pin cooperating, when in set position, with said locking member to hold the same in breech bolt locking position, the flight of the firing pin being away from said locking member whereby its movement is unimpeded by the locking means.

9. A firearm comprising a rotary and reciprocatory breech bolt, a non-rotating sleeve reciprocating with the bolt, a firing pin operatively associated with said bolt and sleeve and movable relative thereto, and means for locking said breech bolt in firing position comprising a locking member mounted on said sleeve to cooperate with said breech bolt, said firing pin cooperating, when in set position, with said locking member to hold the same in breech bolt locking position.

10. A firearm comprising a rotary and reciprocatory breech bolt, a firing pin operatively associated therewith, and a breech bolt locking means cooperating with said firing pin when the firing pin is in set position to lock the breech bolt, the firing stroke of said firing pin being away from said locking means.

11. A firearm comprising a rotary and reciprocatory breech bolt, a firing pin operatively associated therewith, and a breech bolt locking means, said firing pin when in set position constituting a detent for the breech bolt locking means, the firing stroke of said firing pin being away from said locking means.

12. A firearm breech bolt action comprising a breech bolt mounted for reciprocatory and rotary movement, a firing pin operatively associated with said breech bolt, and a breech bolt locking means operatively associated with said breech bolt and firing pin, the firing pin acting when set to hold said locking means in locked position, the flight of the firing pin being away from and unimpeded by said locking means.

13. A firearm breech bolt action comprising a breech bolt mounted for reciprocatory and rotary movement, a firing pin operatively associated with said breech bolt, and a breech bolt locking means operatively associated with said breech bolt and firing pin, the firing pin acting when set to hold said locking means in locked position.

14. A breech bolt firearm action consisting of a breech bolt, automatic means for locking said breech bolt in initial position after actuation to set the firing pin, and a firing pin constituting a detent for said locking means, the flight of the firing pin being free and unimpeded by said locking means.

15. A breech bolt firearm action consisting of a breech bolt, automatic means for locking said breech bolt in initial position after actuation to set the firing pin, and a firing pin constituting a detent for said locking means.

16. A firearm breech bolt action comprising a breech bolt mounted for reciprocatory and rotary movement, a firing pin operatively associated with said breech bolt, and a breech bolt locking means operatively associated with said breech bolt and firing pin, the firing pin constituting a detent for said locking means, the flight of the firing pin being free and unimpeded by said locking means.

17. A firearm breech bolt action comprising a breech bolt mounted for reciprocatory and rotary movement, a firing pin operatively associated with said breech bolt, and a breech bolt locking means operatively associated with said breech bolt and firing pin, the firing pin constituting a detent for said locking means.

In witness whereof I have hereunto set my hand.

ELMER R. STAHL.

CONFIDENTIAL-SUBJECT TO PROTECTIVE ORDER
KINZER V. REMINGTON

Dealer Discount Sheet

JANTZ SIDE SWING SAFETIES:

Mauser..... Less 25%
Rem. 700.....Less 25%
Springfield..... Less 25%

CLASSIC BOLT HANDLES:

Plain Machined handle.....Less 25%
Plain Handle welded to your bolt....NET
Hand Checkering..... NET

JANTZ BOLT WELDING JIG.....Less 25%

CONETROL RINGS..... NET

JANTZ CONTOURED CONETROL BASES:
Polished and blued.....Less 20%
Machined only..... Less 33%

BARRELING..... Less 20%

ACTION RESTYLING.....NET

GUNSMITH SERVICES..... NET

GUNSMITH TOOLS.....NET

Ken Jantz Metalsmithing

Route 1 Sulphur, Ok 73086 (405) 622-3790

CONFIDENTIAL-SUBJECT TO PROTECTIVE ORDER
KINZER V. REMINGTON

R2539516

KEN JANTZ METALSMITHING
ROUTE 1
SULPHUR, OKLAHOMA 73086
(405) 622-3790

Dear Sir,

We are pleased to send you the enclosed brochure which will introduce you to our line of fine quality products.

We have manufactured and retailed our MAUSER SAFETIES for over ten years. During this time our market has grown to include every state in the U.S. + 9 foriegn countries. We have improved and perfected this product striving for quality and unsurpassed workmanship.

Jim Carmichael writes in "OUTDOOR LIFE" magazine - "Jantz's safeties are gracefully contoured and feature a checkered thumb pad, they are as good or better than any I've seen--"
Nick Harvey writes in Austrailias "Sporting Shooter" magazine - "The Jantz sideswing safety adds a touch of class--"

We now have a sideswing safety for the SPRINGFIELD which utilizes the original sleeve, as we have done with the Mauser. These Standard model SPRINGFIELD safeties sell for $59.95. Our Classic safety for the Springfield is completely machined (from the sleeve to the safety handle). This is a 3-position safety which adds classic lines to your fine custom rifle. These are now available for $124.95.

The REM 700 side safety, which also fits the 721,722, 600, Mohawk, 40X and XP-100, is completely machined, designed to add elegance to the finest custom rifle. With this 3-position safety you can lock the bolt or open the action while on safe. We offer a right or left hand model, each with complete fitting instructions. The current price of these safeties is $87.95.

Our RUGER sideswing safety, a must for every owner of a Ruger 77 action is a completely custom classic design 3-position safety. With complete fitting instructions, these sell for only $87.95.

We also have a SAKO 3-position safety available on a custom order basis. We must have your complete action to complete this safety.

Thank you for your interest, we look forward to pleasing you with our quality products soon.

Sincerely,

Ken Jantz

Enclosure

P.S. We are not taking orders for any trigger guards at present EXCEPT for the Win M 70 of which there is a limited supply. We are out of stock at present on all others and it will be several months before we are able to fill the orders we now have. Thank you

CONFIDENTIAL-SUBJECT TO PROTECTIVE ORDER
KINZER V. REMINGTON

JANTZ
SIDESWING SAFETY

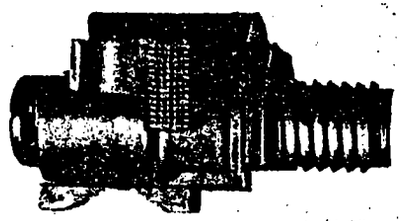

- FITS 98, FN, MARK X, SANTA BARBARA AND MEXICAN MAUSERS
  (For Siamese Mausers Send Your Bolt Sleeve)
- STANDARD ALSO AVAILABLE FOR SPRINGFIELD A3-03
- PERMITS LOW SCOPE MOUNTING
- LOCKS FIRING PIN AND BOLT
- SAFETY MACHINED FROM 01 TOOL STEEL
- CLEAN, SHARP, HAND CHECKERED PAD
- COMPLETELY ASSEMBLED
- EASY TO INSTALL
  (complete instructions included)
- AVAILABLE FOR IMMEDIATE DELIVERY

STANDARD SAFETY—

PERFECT FOR SPORTSMEN AND HUNTERS
SATIN BLUE FINISH

$59.95 +$1.50 shipping

CLASSIC SAFETY—

MACHINED TO CLOSE TOLERANCES, REFINED, HI-GRADE FINISH FOR THE QUALITY CUSTOM RIFLE. USED AND RECOMMENDED BY MANY OF THE WORLD'S TOP STOCKMAKERS. CHOICE OF HI-GLOSS BLUE OR IN THE WHITE

$82.95 +$1.50 shipping

CLASSIC HANDLES
by KEN JANTZ

- CLEAN, SHARP CLASSIC STYLE
- EASY TO WELD
- MACHINED FROM 1018 BAR STOCK
- BLUES NICELY
- GOOD STRENGTH

PLAIN MACHINED HANDLES: $8.00 each + shipping

PLAIN HANDLE WELDED TO YOUR BOLT

$82.95 + shipping

HAND CHECKERING

$42.50 per panel
up to 5 panels

JANTZ BOLT WELDING JIG

$82.95 + shipping

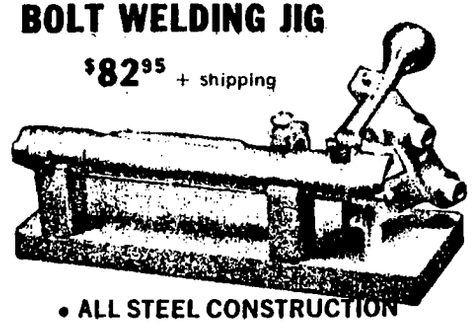

- ALL STEEL CONSTRUCTION
- SIMPLE, ACCURATE SET UP
- DUPLICATE JOBS IN SECONDS
- USE ANY MAKE HANDLE

JANTZ
SIDESWING SAFETY

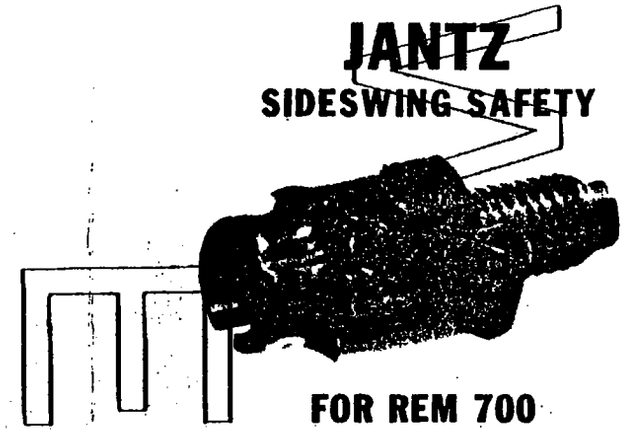

FOR REM 700

- COMPLETE
- READY TO BE INSTALLED BY COMPETENT GUNSMITH
- AVAILABLE FOR RIGHT OR LEFT HAND ACTIONS.

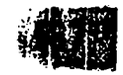

+ 1.50 shipping

3-POSITION 87.95

JANTZ CONTOURED BASES

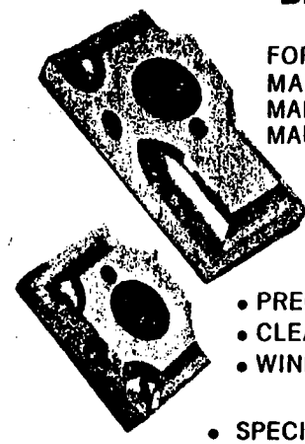

FOR WIN. 70, MAUSER 98, MAUSER FN, MAUSER MARK X, REM. 700 AND MAUSER SMALL RING

- PRECISION MACHINED
- CLEAN LINES
- WINDAGE ADJUSTMENT

- SPECIFY RING PREFERENCE: REDFIELD, LEOPOLD OR CONETROL.

POLISHED AND BLUED - $82.95 + shipping
MACHINED ONLY - $59.95 + shipping

R2539518

CONFIDENTIAL-SUBJECT TO PROTECTIVE ORDER
KINZER V. REMINGTON

KEN JANTZ
METALSMITHING

Offering Quality Accessories and Services to the Connoisseur of Fine Guns since 1965.

GUNSMITHING SERVICES

Fit safeties to your action	$15
Inlet receiver for bolt handle	15
Fit Canjar triggers to your action	20
Fit trigger and safety at same time	25
Drill and tap receiver for scope	25
Check headspace	5
Rockwell hardness test action	6
Rockwell hardness test action and bolt	9
Remove barrel from action	5
Lap locking lugs on Mauser type action	10
Fit custom bases to receiver	10

ORDERING

To order send check or Money Order with instructions. For Fast service, we will accept COD phone orders on in stock items. We look forward to serving you.

DIRECT ALL ORDERS AND INQUIRIES TO:

KEN JANTZ METALSMITHING
ROUTE 1
SULPHUR, OK. 73086
(405) 622-3790

KEN JANTZ METALSMITHING

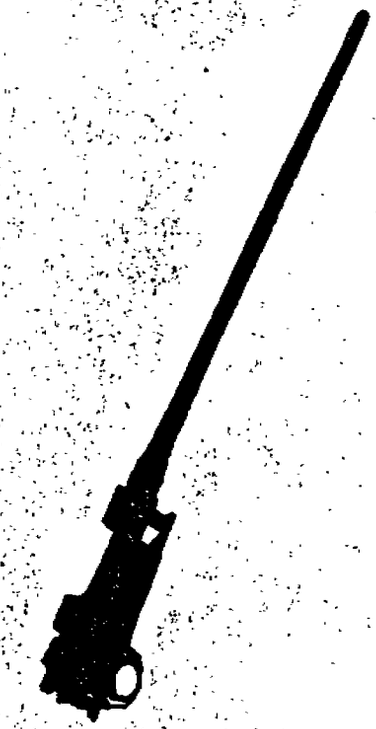

"Fine Rifle Accessories and Services Since 1965"

R2539519

KEN JANTZ METALSMITHING
ROUTE 1
SULPHUR, OKLAHOMA 73086
(405) 622-3790

Dear Sir,

We are pleased to send you the enclosed brochure which will introduce you to our line of fine quality products.

We have manufactured and retailed our MAUSER SAFETIES for over ten years. During this time our market has grown to include every state in the U.S. + 9 foriegn countries. We have improved and perfected this product striving for quality and unsurpassed workmanship.

Jim Carmichael writes in "OUTDOOR LIFE" magazine - "Jantz's safeties are gracefully contoured and feature a checkered thumb pad, they are as good or better than any I've seen--"
Nick Harvey writes in Austrailias "Sporting Shooter" magazine - "The Jantz sideswing safety adds a touch of class--"

We now have a sideswing safety for the SPRINGFIELD which utilizes the original sleeve, as we have done with the Mauser. These Standard model SPRINGFIELD safeties sell for $59.95. Our Classic safety for the Springfield is completely machined (from the sleeve to the safety handle). This is a 3-position safety which adds classic lines to your fine custom rifle. These are now available for $124.95.

The REM 700 side safety, which also fits the 721,722, 600, Mohawk, 40X and XP-100, is completely machined, designed to add elegance to the finest custom rifle. With this 3-position safety you can lock the bolt or open the action while on safe. We offer a right or left hand model, each with complete fitting instructions. The current price of these safeties is $87.95.

Our RUGER sideswing safety, a must for every owner of a Ruger 77 action is a completely custom classic design 3-position safety. With complete fitting instructions, these sell for only $87.95.

We also have a SAKO 3-position safety available on a custom order basis. We must have your complete action to complete this safety.

Thank you for your interest, we look forward to pleasing you with our quality products soon.

Sincerely,

Ken Jantz

Enclosure

P.S. We are not taking orders for any trigger guards at present EXCEPT for the Win M 70 of which there is a limited supply. We are out of stock at present on all others and it will be several months before we are able to fill the orders we now have. Thank you

CONFIDENTIAL-SUBJECT TO PROTECTIVE ORDER
KINZER V. REMINGTON

CONFIDENTIAL-SUBJECT TO PROTECTIVE ORDER
KINZER V. REMINGTON

JANTZ

SIDESWING SAFETY

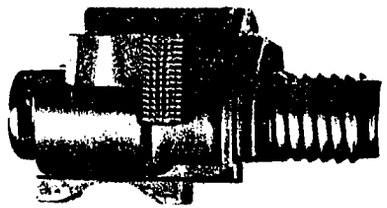

- FITS 98, FN, MARK X, SANTA BARBARA AND MEXICAN MAUSERS
  (For Siamese Mausers Send Your Bolt Sleeve)
- STANDARD ALSO AVAILABLE FOR SPRINGFIELD A3-03
- PERMITS LOW SCOPE MOUNTING
- LOCKS FIRING PIN AND BOLT
- SAFETY MACHINED FROM 01 TOOL STEEL
- CLEAN, SHARP, HAND CHECKERED PAD
- COMPLETELY ASSEMBLED
- EASY TO INSTALL
  (complete instructions included)
- AVAILABLE FOR IMMEDIATE DELIVERY

STANDARD SAFETY—

PERFECT FOR SPORTSMEN AND HUNTERS
SATIN BLUE FINISH

$59.95 + $1.50 shipping

CLASSIC SAFETY—

MACHINED TO CLOSE TOLERANCES, REFINED, HI-GRADE FINISH FOR THE QUALITY CUSTOM RIFLE. USED AND RECOMMENDED BY MANY OF THE WORLD'S TOP STOCKMAKERS. CHOICE OF HI-GLOSS BLUE OR IN THE WHITE

$82.95 + $1.50 shipping

CLASSIC HANDLES

by KEN JANTZ

- CLEAN, SHARP CLASSIC STYLE
- EASY TO WELD
- MACHINED FROM 1018 BAR STOCK
- BLUES NICELY
- GOOD STRENGTH

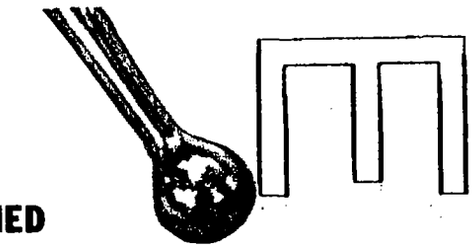

PLAIN MACHINED HANDLES: $8.00 each + shipping

PLAIN HANDLE WELDED TO YOUR BOLT

$82.95 + shipping

HAND CHECKERING

$42.50 per panel up to 5 panels

JANTZ BOLT WELDING JIG

$82.95 + shipping

- ALL STEEL CONSTRUCTION
- SIMPLE, ACCURATE SET UP
- DUPLICATE JOBS IN SECONDS
- USE ANY MAKE HANDLE

JANTZ

SIDESWING SAFETY

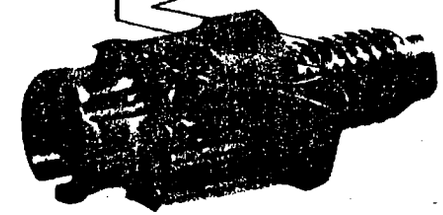

FOR REM 700

- COMPLETE
- READY TO BE INSTALLED BY COMPETENT GUNSMITH
- AVAILABLE FOR RIGHT OR LEFT HAND ACTIONS.

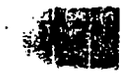

+ 1.50 shipping

3-POSITION 87.95

JANTZ CONTOURED BASES

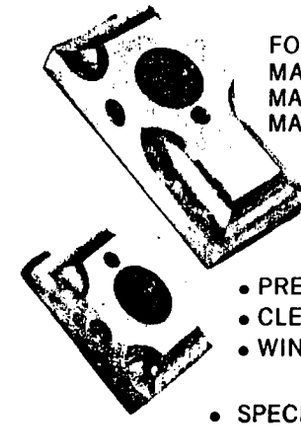

FOR WIN. 70, MAUSER 98, MAUSER FN, MAUSER MARK X, REM. 700 AND MAUSER SMALL RING

- PRECISION MACHINED
- CLEAN LINES
- WINDAGE ADJUSTMENT
- SPECIFY RING PREFERENCE: REDFIELD, LEOPOLD OR CONETROL.

POLISHED AND BLUED - $82.95 + shipping
MACHINED ONLY - $59.95 + shipping

R2539521

CONFIDENTIAL-SUBJECT TO PROTECTIVE ORDER
KINZER V. REMINGTON

KEN JANTZ
METALSMITHING

Offering Quality Accessories and Services to the Connoisseur of Fine Guns since 1965.

GUNSMITHING SERVICES

Fit safeties to your action	$15
Inlet receiver for bolt handle	15
Fit Canjar triggers to your action	20
Fit trigger and safety at same time	25
Drill and tap receiver for scope	25
Check headspace	5
Rockwell hardness test action	6
Rockwell hardness test action and bolt	9
Remove barrel from action	5
Lap locking lugs on Mauser type action	10
Fit custom bases to receiver	10

ORDERING

To order send check or Money Order with instructions. For Fast service, we will accept COD phone orders on in stock items. We look forward to serving you.

DIRECT ALL ORDERS AND INQUIRIES TO:

KEN JANTZ METALSMITHING
ROUTE 1
SULPHUR, OK. 73086
(405) 622-3790

R2539522

KEN JANTZ METALSMITHING

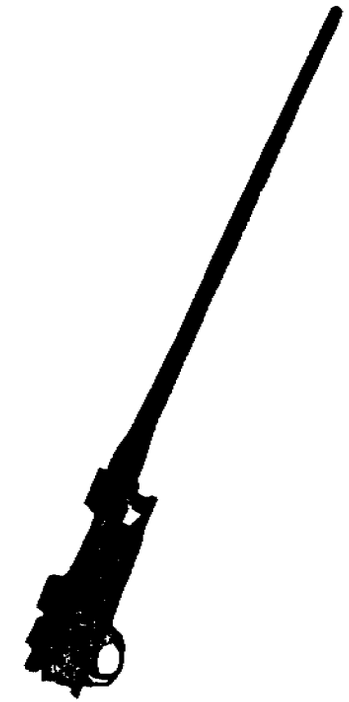

"Fine Rifle Accessories and Services Since 1965"

REMINGTON ARMS COMPANY, INC.

INTER-DEPARTMENTAL CORRESPONDENCE

Remington DU PONT PETERS DU PONT

"CONFINE YOUR LETTER TO ONE SUBJECT ONLY"

xc: C. B. Workman
J. S. Martin
F. E. Martin
E. R. Owens

April 8, 1981

To: T. L. Capeletti

From: J. W. Bower

Re: M/700 Bolt Lock - Manufacturing Costs

In October, 1980, Industrial Engineering issued a report on the cost of the M/700 Bolt Lock based on a PE & C estimate. Because of the seemingly high cost to manufacture this feature, the Research Process Development Group was asked to review. Exhibit 1 shows a comparison of costs based on estimates prepared by PE & C, Research, and a hypothetical best case.

The major difference between the Research and PE & C estimate is the labor cost to make the extra cuts in the Bolt Plug. PE & C estimated two special machines, the Research estimate provides for 1 machine, and, therefore, less labor input. This $.21 difference is multiplied when labor variance, industrial relations, and overhead are added to it.

The "best case" condition assumes that the pin hole in the Bolt Latch can be moved so that the powder metal blank can be made to include the hole. This $.11 savings in the direct cost to drill the hole is again multiplied by the various overhead accounts.

Two other approaches are possible. If a high strength plastic could be substituted for powder metal in the Bolt Latch, ~~it may be~~ possible to reduce the total cost of the feature by an additional $.20 below the "best case". Finally, the possibility of an investment cast ~~Bolt Plug~~ could be investigated. It would be necessary to eliminate all of the added cuts in the investment cast blank, however, to show any significant savings.

JWB:ws
Firearms Research Division
Attach.

CONFIDENTIAL-SUBJECT TO PROTECTIVE ORDER
KINZER V. REMINGTON

Exhibit 1

M/700 BOLT LOCK

MANUFACTURING COSTS

	PE&C	R&D	BEST CASE
Standard Material			
Bolt Latch	.17	.15	.15
Detent Plunger	.02	.02	.02
Detent Plunger Spr.	.01	.01	.01
Detent Retaining Pin	.01	.01	.01
Total	.21	.19	.19
Material Variance (12.2%)	.03	.02	.02
Standard Labor			
Bolt Latch	.12	.12	.01
Bolt Plug	.38	.17	.17
Bolt Assembly	.05	.03	.03
Firing Pin Assembly	.09	.07	.07
Final Assembly	.01	.01	.01
Total	.65	.40	.29
Labor Variance (38.6%)	.25	.15	.11
Industrial Relations (47.9%)	.43	.26	.19
Misc. Direct Exp (3.8%)	.06	.04	.03
Depreciation (7.5% Capital)	.13	.07	.07
Manufacturing Overhead (10%)	.18	.12	.09
Plant Overhead (17.5%)	.34	.22	.17
Price/Gun	$2.28	$1.47	$1.16

CONFIDENTIAL-SUBJECT TO PROTECTIVE ORDER
KINZER V. REMINGTON

xc: C. B. Workman
J. P. Linde
F. E. Martin
S. A. Fanelli

RD-52-8

REMINGTON ARMS COMPANY, INC.

INTER-DEPARTMENTAL CORRESPONDENCE

Remington DU PONT PETERS DU PONT

"CONFINE YOUR LETTER TO ONE SUBJECT ONLY"

Ilion, New York
January 9, 1981

TO: T. L. Capeletti

FROM: J. S. Martin

SUBJECT: M/700 Bolt Lock - M/788 Safety

A meeting was held on January 8, 1981 with John Linde and Process Personnel to resolve the problems on the M/700 bolt lock and the M/788 safety designs.

The bolt lock design was covered first and a complete review of each component was discussed as to the design/cost, etc. The plunger will be looked at again (.0234) and the bolt handle. New quotes will be made. The rest of the parts were inspected for design/cost, etc. and found to be in line. Other designs were shown including the latest and the cost savings vs. the appearance and acceptability was not that much greater.

It was agreed upon that we will stay with the design we now have. Five models are complete and ready for test.

It is my opinion that we should finalize the bolt lock design as is, finish the testing and if proven satisfactory with the new fire control design, make a proposal to the committee that this be approved.

If there are objections, the other proposal would be to just remove the bolt lock completely and go with our present M/700 ~~design~~ fire control.

The M/788 Safety

The design was reviewed and explained to the Process Engineering Personnel.

It was suggested that a large sample of springs and plungers be purchased and our present safety lever be altered to the new angle 100° included and

CONFIDENTIAL-SUBJECT TO PROTECTIVE ORDER
KINZER V. REMINGTON

try the design of the new safety force (on and off) to better prove the design. The only other thing left would then be to add the new head design the way we have it.

It is the opinion of the writer that this is a good way to go and we have full cooperation from Process Engineering. We should propose the design this way to the committee, show the new design lever and ask for approval to proceed in this manner.

JSM:ws
Firearms Research Division

WEIGEL

CONFIDENTIAL-SUBJECT TO PROTECTIVE ORDER
KINZER V. REMINGTON

R2539526

Copies to: R. L. Hall
R. A. Morris
H. K. Boyle
G. E. Fletcher
J. H. Sweeney
J. P. Linde
L. B. Bosquet
Z. J. Kowalski
Est. No. 4197

October 24, 1980

G. D. CAMPBELL

M/700 Bolt Latch Mechanism

Evaluation of the proposed Bolt Latch mechanism for M/700 rifles indicates it will result in a $3.00 increase in unit factory cost (full allocation basis) in its first year (1982). For comparison purposes, a 1982 M/700 "Line Before" and three alternative "Line After" results were developed based on M/700 cost performance during the first six months of 1979. These alternatives were:

1. Adding of the Bolt Latch mechanism without adjusting prices.

2. Adding the Bolt Latch mechanism and adjusting prices to maintain the percent pretax margin.

3. Adding the Bolt Latch mechanism without adjusting prices, but deleting the sling and swivels from the BDL grade to compensate for the increased cost.

The results of these evaluations are summarized in the attached table which shows weighted average unit prices, costs, and pretax earnings and the project results. This data has been adjusted to anticipated 1982 price and cost levels.

As shown in this table, Alternative III is the most attractive in % margin, earnings, and net return on investment because it results in a net reduction in costs and working capital requirements. One disadvantage of this alternative is that ADL and Classic grade earnings are adversely affected, and the results shown depend on maintaining current product mix.

Alternative II also results in increased earnings, however, its net return on investment is substantially lower because of additional working capital requirements resulting from increased costs and sales.

All alternatives require project expenditures of $249M construction and $83M in operations charges. Detailed data for the line before and each alternative are attached.

J. C. Hutton

J. C. Hutton, Superintendent
INDUSTRIAL ENGINEERING SECTION

by T. R. Andrews
TRA/mc
Att.

CONFIDENTIAL-SUBJECT TO PROTECTIVE ORDER
KINZER V. REMINGTON

	1982 Line Before	1982 Line After: Alternative I Without Price Adjustment	1982 Line After: Alternative II With Price Adjustment	1982 Line After: Alternative III With Sling Deleted From BDL
Retail Selling Price	$ 411.28	$ 411.28	$ 419.09	$ 411.28
Net Selling Price	220.55	220.55	224.74	220.55
Factory Cost	158.05	161.05	161.05	155.89
Total Cost	183.75	186.62	187.23	181.68
Pretax Earnings - Unit	36.80	33.93	37.51	38.87
Line	$ 5,123 M	$ 4,723 M	$ 5,221 M	$ 5,410 M
% of Net Selling	16.7%	15.4%	16.7%	17.6%
Project Results				
Pretax Earnings				
Full Allocation	--	($400M)	$ 98M	$ 287 M
Incremental	--	($310M)	$223M	$ 275 M
Net Earnings				
Full Allocation	--	($204M)	$ 52M	$ 150 M
Incremental		($158M)	$117M	$ 144 M
Net Return on Investment				
Full Allocation	--	Negative	8.6%	202.7%
Incremental	--	Negative	19.7%	187.0%

R2539528
CONFIDENTIAL-SUBJECT TO PROTECTIVE ORDER
KINZER V. REMINGTON

39 x 11 — 5 columns
With description column

M/700 Line Before - 1982

TRG
10/27/80

	M/700 ADL	M/700 BDL	M/700 Classic	Line Before (M$'s) Book	Incremental	Weighted Ave
Quantity	46,636	88,398	4,176	139,210	139,210	139,210
Retail Selling Price	$358.14	$439.72	$402.55	57,254		$411.28
Net Selling Price	$192.05	235.80	215.87	30,702	30,702	$220.55
Standard Material	$31.46	$39.49	$32.99	5,096	5,096	
Material Variance	3.83	4.88	4.08	627	627	
Standard Labor	22.35	25.17	23.55	3,366	3,366	
Labor Variance	13.27	15.12	13.21	2,011	2,011	
Direct Expense	22.44	25.60	25.24			
Gas & Power	2.24	2.52	2.36			
Industrial Relations	17.06	19.30	17.61			
Gratus Repairs	.85	.91	.85			
Total Direct Chgs.	$42.59	$48.33	$46.06	6,451	6,451	
Supervision	2.16	2.42	2.30			
Industrial Relations	1.03	1.15	1.09			
Factory Clerks	.27	.30	.29			
Industrial Engineering	.30	.33	.32			
Depreciation	3.16	3.58	3.35			
PE & C Direct	.20	.22	.21			
Floor Space	2.34	2.62	2.48			
Project Cost	.90	1.01	.95			
Other Direct	.28	.31	.29			
Total Mfg O/H	$10.64	$11.94	$11.28	1,599	—	
Sub-Total	$124.14	$144.93	$131.17	19,150		
Plant Overhead	21.87	25.35	23.60	3,359	—	
Unadjusted Factory Cost	$146.01	170.28	$154.77	22,509	17,551	
Factory Cost (Adj. for Cost Red)	$142.73	$166.45	$151.29	22,002	17,156	158.05
Selling & Administrative	14.60	17.92	16.41	2,334	921	16.76
Technical	2.69	3.30	3.02	430	154	3.09
Distribution	3.65	4.48	4.10	583	368	4.19
Cost Before Admin. Exp	163.67	192.15	174.82		18,599	
Total Cost	$164.89	$194.03	$176.59	25,579	19,119	$183.75
Earning Before Admin. Exp	28.38	43.65	41.05		12,103	
Less: Admin Exp	1.22	1.88	1.77	230	520	1.66
Pretax Earnings	$27.16	$41.77	$39.28	5,123	11,583	36.80
Less: Tax						
plus: Amortized ITC						
Net Earnings						
Pretax Margin (% of Net Selling)	14.1%	17.7%	18.2%			16.7%

CONFIDENTIAL-SUBJECT TO PROTECTIVE ORDER
KINZER V. REMINGTON

8½ x 11 — 6 columns
With description column

ALTERNATIVE I
M/700 LINE AFTER WITH BOLT LATCH 1982
WITHOUT PRICE ADJUSTMENT

TRM 10/30/80

	M/700 ADL	M/700 BDL	M/700 CLASSIC	LINE AFTER (M$'s) Book	Incremental	WEIGHTED AVE.
QUANTITY	46.636	88.398	4.176	139.210	139.210	139.210
RETAIL SELLING PRICE	$358.14	$439.72	$402.55	57,254		$411.28
NET SELLING PRICE	$192.05	$235.80	$215.87	30,702	30,702	$220.55
STANDARD MATERIAL	$31.89	$39.92	$33.42	5,156	5,156	
MATERIAL VARIANCE	3.88	4.93	4.13	634	634	
STANDARD LABOR	23.00	25.82	24.20	3,456	3,456	
LABOR VARIANCE	13.52	15.37	13.46	2,046	2,046	
DIRECT EXPENSE	27.74	25.90	25.54			
GAS & POWER	2.30	2.58	2.42			
INDUSTRIAL RELATIONS	17.49	19.73	18.04			
GRATUS REPAIRS	.87	.93	.87			
TOTAL DIRECT CHGS.	43.40	49.14	46.87	6,564	6,564	
SUPERVISION	2.22	2.48	2.36			
INDUSTRIAL RELATIONS	1.06	1.18	1.12			
FACTORY CLERKS	.28	.31	.30			
INDUSTRIAL ENGINEERING	.31	.34	.33			
DEPRECIATION	3.29	3.71	3.48		18	
PE & C DIRECT	.21	.23	.22			
FLOOR SPACE	2.41	2.69	2.55			
PROJECT COST	.93	1.04	.99			
OTHER DIRECT	.29	.32	.30			
TOTAL MFG O/H	11.00	12.30	11.64	1,649	18	
SUB-TOTAL	126.69	147.48	133.72	19,505	17,874	
PLANT OVERHEAD	22.32	25.80	24.05	3,422	–	
UNADJUSTED FACTORY COST	149.01	173.28	157.77	22,927	17,874	
FACTORY COST (ADJ. FOR COST RED)	145.73	169.45	154.29	22,420	17,479	161.05
SELLING & ADMINISTRATIVE	14.60	17.92	16.41	2,334	921	16.76
TECHNICAL	2.69	3.30	3.02	430	154	3.09
DISTRIBUTION	3.65	4.48	4.10	583	368	4.19
COST BEFORE ADMIN. EXP	166.67	195.15	177.82		18,922	
TOTAL COST	$167.76	$196.90	$179.46	25,979	19,429	$196.62
EARNING BEFORE ADMIN. EXP	25.38	40.65	38.05		11,780	
less: ADMIN. EXP	1.09	1.75	1.64	212	507	1.53
PRETAX EARNINGS	$24.29	$38.90	$36.41	4,723	11,273	$33.93
less: TAX						
plus: AMORTIZED ITC						
NET EARNINGS						
PRETAX MARGIN (% OF NET SELLING)	12.6%	16.5%	16.9%			15.4%

CONFIDENTIAL-SUBJECT TO PROTECTIVE ORDER
KINZER V. REMINGTON

ALTERNATIVE II

M/700 LINE AFTER WITH BOLT LATCH - 1982

PRICES ADJUSTED TO MAINTAIN % MARGIN

TRD 10/20/80

	M/700 ADL	M/700 BDL	M/700 CLASSIC	LINE AFTER (M $'S) BOOK	INCREMENTAL	WEIGHTED AVG
QUANTITY	46,636	88,398	4,176	139,210	139,210	139,210
RETAIL SELLING PRICE	$365.95	$447.53	$410.36	58,341		$419.09
NET SELLING PRICE	$196.24	239.99	220.06	31,285	31,285	$224.74
STANDARD MATERIAL						
MATERIAL VARIANCE						
STANDARD LABOR						
LABOR VARIANCE						
DIRECT EXPENSE						
GAS & POWER						
INDUSTRIAL RELATIONS						
GRATUS REPAIRS						
TOTAL DIRECT CHGS.						
SUPERVISION						
INDUSTRIAL RELATIONS						
FACTORY CLERKS	SAME AS LINE AFTER WITHOUT PRICE ADJUSTMENT					
INDUSTRIAL ENGINEERING						
DEPRECIATION						
PE & C DIRECT						
FLOOR SPACE						
PROJECT COST						
OTHER DIRECT						
TOTAL MFG O/H						
SUB-TOTAL						
PLANT OVERHEAD						
UNADJUSTED FACTORY COST						
FACTORY COST (ADJ. FOR COST RED)	$145.73	$169.45	$154.29	22,420	17,479	$161.05
SELLING & ADMINISTRATIVE	14.91	18.24	16.72	2,378	939	17.08
TECHNICAL	2.74	3.36	3.08	438	156	3.14
DISTRIBUTION	3.73	4.56	4.18	594	375	4.27
COST BEFORE ADMIN. EXP	167.11	195.61	178.27		18,949	
TOTAL COST	$168.36	$197.52	$180.07	26,064	19,479	$187.23
EARNING BEFORE ADMIN. EXP	29.13	44.38	41.79		12,336	
LESS: ADMIN. EXP	1.25	1.91	1.80	234	530	1.69
PRETAX EARNINGS	$27.88	$42.47	$39.99	5,221	11,806	37.51
LESS: TAX						
PLUS: AMORTIZED ITC						
NET EARNINGS						
PRETAX MARGIN (% OF NET SELLING)	14.2 %	17.7 %	18.2 %			16.7 %

CONFIDENTIAL-SUBJECT TO PROTECTIVE ORDER
KINZER V. REMINGTON

3½ x 11 — 6 columns
With description column

ALTERNATIVE III

M/700 LINE AFTER WITH BOLT LATCH

WITHOUT PRICE ADJUSTMENT

SLING & SWIVELS DELETED FROM BDL GRADE

TRD 10/23/80

	M/700 ADL	M/700 BDL	M/700 CLASSIC	LINE AFTER (M$'s) BOOK	LINE AFTER (M$'s) INCREMENTAL	WEIGHTED AVE
QUANTITY	46,636	88,398	4,176	139,210	139,210	139,210
RETAIL SELLING PRICE	$358.14	$439.72	$402.55	57,254		$411.28
NET SELLING PRICE	$192.05	$235.80	$215.87	30,702	30,702	$220.55
STANDARD MATERIAL	$31.89	$33.65	$33.42	4,601	4,601	
MATERIAL VARIANCE	3.88	4.16	4.13	566	566	
STANDARD LABOR	23.00	25.81	24.20	3,456	3,456	
LABOR VARIANCE	13.52	15.37	13.46	2,046	2,046	
DIRECT EXPENSE	22.74	25.89	25.54			
GAS & POWER	2.30	2.58	2.42			
INDUSTRIAL RELATIONS	17.49	19.72	18.04			
GRATUS REPAIRS	.87	.93	.87			
TOTAL DIRECT CHGS.	43.40	49.12	46.87	6,562	6,562	
SUPERVISION	2.22	2.48	2.36			
INDUSTRIAL RELATIONS	1.06	1.18	1.12			
FACTORY CLERKS	.28	.31	.30			
INDUSTRIAL ENGINEERING	.31	.34	.33			
DEPRECIATION	3.29	3.71	3.48		18	
PE & C DIRECT	.21	.23	.22			
FLOOR SPACE	2.41	2.69	2.55			
PROJECT COST	.93	1.04	.98			
OTHER DIRECT	.29	.32	.30			
TOTAL MFG O/H	11.00	12.30	11.64	1,649	18	
SUB-TOTAL	126.69	140.41	133.72	18,880	17,249	
PLANT OVERHEAD	22.32	24.56	24.05	3,312	—	
UNADJUSTED FACTORY COST	149.01	164.97	157.77	22,192	17,249	
FACTORY COST (ADJ. FOR COST RED)	145.73	161.33	154.29	21,702	16,868	155.89
SELLING & ADMINISTRATIVE	14.60	17.92	16.41	2,334	921	16.76
TECHNICAL	2.69	3.30	3.02	430	154	3.09
DISTRIBUTION	3.65	4.48	4.10	583	368	4.19
COST BEFORE ADMIN. EXP	166.67	187.03	177.82		18,311	
TOTAL COST	$167.76	$189.13	$179.46	25,292	18,844	$181.68
EARNING BEFORE ADMIN. EXP	25.38	48.77	38.05		12,391	
less: ADMIN EXP	1.09	2.10	1.64	243	533	1.75
PRETAX EARNINGS	$24.29	$46.67	$36.41	5,410	11,858	$38.87
less: TAX						
plus: AMORTIZED ITC						
NET EARNINGS						
PRETAX MARGIN (% OF NET SELLING)	12.6%	19.8%	16.9%			17.6%

CONFIDENTIAL-SUBJECT TO PROTECTIVE ORDER
KINZER V. REMINGTON

8½ x 11 -- 6 columns
With description column

M/700 Bolt Latch Mechanism
Cost Breakdown

T.R Andrews
12/17/80

Standard Material	$.43	(Estimated)
Material Variance	.05	(@ 17.2% - historical ratio)
Standard Labor	.65	(Estimated)
Labor Variance	.25	(38.6% - calculated by department based on 1979 experience)
Direct Charges	.30	(Estimated)
Industrial Relations	.43	(@ 47.9% of Labor + Labor Variance)
Other Direct Expense	.08	(Calculated based on historical gratus repair and gas & power ratios)
Additional Depreciation	.13	(@ 7.5% of project estimate)
Other Manufacturing Overhead	.23	(Calculated based on historical ratios)
Sub-Total	$2.55	
Plant Overhead	.45	(@ 17.5% of subtotal - historical ratio)
Total Cost	$3.00	

CONFIDENTIAL-SUBJECT TO PROTECTIVE ORDER
KINZER V. REMINGTON

8½ x 11 → 6 columns
With description column

M/700 Bolt Latch Mechanism
Cost by Component

T.R. Andrews
12/17/80

Component	Standard Material	Standard Labor	Direct Charges
Bolt Latch (new part, 2 drill press operations, heat treat & color)	$ .168	$ .115	$ .028
Bolt Plug (existing ~~part~~ + 3 special machine operations & deburr)	—	.377	.169
Bolt Assembly (existing ~~part~~ + 1 mill oper.)	—	.053	.101
Firing Pin Assembly (existing part + assem. oper)	—	.092	.0001
Detent Plunger (new part, heat treat & color)	.234	.0004	.0004
Detent Plunger Spring (new part)	.013	—	—
Detent Retaining Pin (new part)	.011	—	—
Final Assembly (added inspection element)		.014	—
Total	$ .426	$ .6514	$ .2985

CONFIDENTIAL-SUBJECT TO PROTECTIVE ORDER
KINZER V. REMINGTON

John M.

5-28-80

W Bolt Action Carbine Estimate

Bolt Assembly
Bolt Latch SK-C-3550
Detent Plunger SK-B-3549
" " Spring —
Ret. P.S. —
Bolt Plug SK-D-3551
Firing Pin Assy
Firing Assembly

E

G

Gary,
This is the estimate for the Bolt Lock - the drawings we rec'd were for the ~~M700~~ but we were requested to include this in the Bolt Action Carbine estimate.

E

Gene
5/21/80

John -
Work this up & issue to IE for estimate on its own. They can add to BAC as separate item.
Thanks
GC

L

CONFIDENTIAL-SUBJECT TO PROTECTIVE ORDER
KINZER V. REMINGTON

(BOLT LOCK)

PROCESS ENGINEERING ESTIMATE - TRIAL AND PILOT SHEET

• SEQUENCE OF OPERATIONS •

MODEL 700 BOLT ACTION CARBINE COMPONENT BOLT ASSEMBLY PART NO. SKD-3553

DATE 5-23-70 COMPUTER KOWALSKI SHEET 1 OF 1

OPER NO.	OPERATION NAME	MACHINE	DEPT. NO.	HOURS DESIGN	HOURS BUILD
	NOTE: SAME AS PRESENT M/600 BOLT ASSEMBLY # 29870 PROCESS EXCEPT FOR THE ADDITIONAL OPERATION				
36	MILL BOLT LATCH SLOT ON END & DEBURR	1-18 CINN MILLER OR EQUAL			
		FIXTURE	NEW	90	120
		FACE CUTTER	"	10	20
		ARBOR	ALL	—	—
		GAGES	NEW	70	180
	TOTAL				

RD-6568 1-18-63

CONFIDENTIAL-SUBJECT TO PROTECTIVE ORDER
KINZER V. REMINGTON

(BOLT LOCK)

PROCESS ENGINEERING ESTIMATE - TRIAL AND PILOT SHEET

M-700 - BOLT ACTION

• SEQUENCE OF OPERATIONS •

MODEL CARBINE COMPONENT BOLT LATCH PART NO. SK-C-3550

DATE 5-23-70 COMPUTER KOWALSKI SHEET 1 OF 1

OPER NO.	OPERATION NAME	MACHINE	DEPT. NO.	HOURS DESIGN	HOURS BUILD
	PURCHASE INVESTMENT CASTING FROM	VENDOR			
	EST. - PC PRICE - $ 1.10 / EA.				
	EST. TOOLING - $4500.00				
	PURCHASE INSPECTION	BENCH			
		COMPARATOR SCREEN	NEW	10	—
		COMP FIXTURE	STD	—	—
		GAGES STD	A.4	—	—
10	DRILL CROSS PIN HOLE	1 SPINDLE DRILL PRESS			
	52 DRILL	DRILL JIG	NEW	40	90
		DRILL #52 (0635)	STD	—	—
		GAGES	NEW	35	105
20	DEBURR	BENCH			
30	BUFF TOP	POLISHING JACK			
40	CYANIDE HARDEN				
50	LINDBERG DRAW				
60	INSPECT FOR ROCKWELL				
70	BLACK OXIDE				
	TO DISPATCH AREA TOTAL				

RD-6568 1-18-63

CONFIDENTIAL-SUBJECT TO PROTECTIVE ORDER
KINZER V. REMINGTON

(BOLT LOCK)

PROCESS ENGINEERING ESTIMATE - TRIAL AND PILOT SHEET

• SEQUENCE OF OPERATIONS •

M/700 & BOLT ACTION CARBINE

MODEL _____ COMPONENT BOLT PLUG PART NO. SK-D-3551

DATE 5-27-80 COMPUTER KOWALSKI SHEET 1 OF 3

OPER NO.	OPERATION NAME	MACHINE	DEPT. NO.	HOURS DESIGN	HOURS BUILD
	PURCHASE SCREW MACHINE BLANK FROM VENDOR.				
		EST PC/PEICE - .58¢ EACH			
		EST. TOOLING - $150.00			
	PURCHASE INSPECTION	GAGES	STD	AU.	—
		COMP SCREW	NEW	8	—
12	MILL FIRING PIN HEAD SLOT & FLATS ON BOTTOM	SAME AS PRESENT M/700 PT #17012			
(NEW) 15	MILL FLAT ON SIDE	0-8 CINN MILLER OR EQUIV.	75		
		FIXTURE	NEW	45	135
		CUTTER	"	5	$100.00
		ARBOR	STD	—	—
		GAGE	NEW	40	120
24	HAND REAM FIRING PIN HEAD HOLE TO REMOVE BURR IN SLOT & BURR BOTH SIDES OF FIRING PIN HEAD SLOT	SAME AS PRESENT M/700 PT # 17012			
	TOTAL				

RD-6568 1-18-63

CONFIDENTIAL-SUBJECT TO PROTECTIVE ORDER
KINZER V. REMINGTON

(BOLT LOCK)

PROCESS ENGINEERING ESTIMATE - TRIAL AND PILOT SHEET

• SEQUENCE OF OPERATIONS •

MODEL M/700 & Bolt Action Carbine COMPONENT Bolt Plug PART NO. SK-D 3551

DATE 5-27-80 COMPUTER Kowalski SHEET 2 OF 3

	OPER NO.	OPERATION NAME	MACHINE	DEPT. NO.	HOURS DESIGN	HOURS BUILD
(NEW)	25	LOAD & UNLOAD	7 STA. SPEC MACHINE - INDEX TYPE			
		MILL FRONT END OF BOLT LATCH SLOT				
		PERCUSS REAR END " " "	MACHINE COST	NEW		100,000
		DRILL 1ST STARTING HOLE	FIXTURE (TREED)	"	70	$7,000
		" 2ND " "	PERISHABLE TOOLS	"	6	$50
		MILL SMALL SLOT	TOOL HOLDERS	"	20	$750
		MILL FORM IN CENTER SECTION	GAGES	"	180	550
		CYCLE TIME - 45 SEC (APPROX)				
(NEW)	26	BUTT & DRILL TO DEPTH DETENT PLUNGER HOLE	2 SPDLS DRILL PRESS			
			DRILL JIG	NEW	60	120
			TOOLS	STD "	2	$15
			GAGES	"	40	110
(NEW)	27	BUTT SPOT DRILL - REM RETAINING PIN HOLE	4 SPDLE DRILL PRESS			
			DRILL JIG	NEW	60	120
			TOOLS	STD "	6	$25
			GAGES	"	35	95
(NEW)	27.5	DEBURR	BENCH			
	29	SUPERSHEEN	(SAME AS M/700)			
		TOTAL				

RD-6563 1-18-63

CONFIDENTIAL-SUBJECT TO PROTECTIVE ORDER
KINZER V. REMINGTON

(BOLT LOCK)

PROCESS ENGINEERING ESTIMATE - TRIAL AND PILOT SHEET

M/700 & BOLT ACTION

• SEQUENCE OF OPERATIONS •

MODEL ~~CARAVE~~ COMPONENT Bolt Plug PART NO. SK-D-3551

DATE ~~5-27-80~~ COMPUTER KOWALSKI SHEET 3 OF 3

OPER NO.	OPERATION NAME	MACHINE	DEPT. NO.	HOURS DESIGN	HOURS BUILD
31	DEGREASE	SAME AS M/700			
32	WITNESS BLACK & PLACE IN TRAYS	" " "			
36	INSPECT FOR COLOR	" " "			
	TO SUB-ASSEMBLY				
	TOTAL				

PD-5820 1-19-63

CONFIDENTIAL-SUBJECT TO PROTECTIVE ORDER
KINZER V. REMINGTON

(BOLT LOCK)

PROCESS ENGINEERING ESTIMATE - TRIAL AND PILOT SHEET

M/700 & BOLT ACTION

• SEQUENCE OF OPERATIONS •

MODEL CARBINE COMPONENT DETENT PLUNGER PART NO. SK-B-354

DATE 8-23-60 COMPUTER KOWALSKI SHEET 1 OF 1

OPER NO.	OPERATION NAME	MACHINE	DEPT. NO.	HOURS DESIGN	HOURS BUILD
	PURCHASE FROM	VENDOR			
	EST PU PRICE - .20¢ EACH				
	EST TOOLING - 100.00				
	PURCHASE INSPECTION	BENCH			
		STD GAGES ETC	STD		
10	CYANIDE HARDEN				
20	NITRE BLACK COLOR				
	TO DISPATCH AREA.				
	TOTAL				

CONFIDENTIAL-SUBJECT TO PROTECTIVE ORDER
KINZER V. REMINGTON

(BOLT LOCK)

PROCESS ENGINEERING ESTIMATE - TRIAL AND PILOT SHEET

M/700 & BOLT ACTION

• SEQUENCE OF OPERATIONS •

MODEL 788 COMPONENT DETENT PLUNGER SPRING PART NO. —

DATE 3-23-80 COMPUTER KOWALSKI SHEET 1 OF 1

OPER. NO.	OPERATION NAME	MACHINE	DEPT. NO.	HOURS DESIGN	HOURS BUILD
	PURCHASE FROM SPRING VENDOR				
		EST PE/PRICE - $11.00 / M			
	PURCHASING INSPECTION	BENCH			
	TO DISPATCH AREA				
	TOTAL				

RD-6568 1-18-63

CONFIDENTIAL-SUBJECT TO PROTECTIVE ORDER
KINZER V. REMINGTON

(BOLT LOCK)

PROCESS ENGINEERING ESTIMATE - TRIAL AND PILOT SHEET

M/700 BOLT ACTION

• SEQUENCE OF OPERATIONS •

MODEL LOBA/NE COMPONENT DETENT PLUNGER RETAINING PIN PART NO. —

DATE 5-28-80 COMPUTER KOWALSKI SHEET 1 OF 1

OPER NO.	OPERATION NAME	MACHINE	DEPT. NO.	HOURS DESIGN	HOURS BUILD
	PURCHASE DRIVE-LOCK "TYPE C" PIN				
	1/16" x 5/8"				
		COST: - $8.60 / M			
	5/8"				
	PURCHASE INSPECTION	MIC'S ETC	STD	—	—
	TO DISPATCH AREA				
	TOTAL				

CONFIDENTIAL-SUBJECT TO PROTECTIVE ORDER
KINZER V. REMINGTON

(BOLT LOCK)

PROCESS ENGINEERING ESTIMATE - TRIAL AND PILOT SHEET

M700 #
BOLT ACTION

• SEQUENCE OF OPERATIONS •

MODEL CARBINE COMPONENT FINAL ASSEMBLY PART NO. —

DATE 5-28-80 COMPUTER KOWALSKI SHEET 1 OF 1

OPER NO.	OPERATION NAME	MACHINE	DEPT. NO.	HOURS DESIGN	HOURS BUILD
	NOTE: SAME AS PROPOSED ESTIMATE FOR BOLT ACTION CARBINE DATED 4-12-80 PLUS THE FOLLOWING OPERATION CHANGE				
177	ASSEMBLE ACTION				
	1A - TRY SAFETY.				
	— ADD - CHECK BOLT LOCK —				
	CLOSE BOLT - LOCK DOWN) -				
	MUST STAY IN LOCK				
	POSITION. RELEASE				
	BOLT LATCH TO OPEN				
	BOLT -				
	CLOSE BOLT - LOCK DOWN)				
	FIRE - BOLT LATCH				
	MUST OPEN) —				
	TOTAL				

CONFIDENTIAL-SUBJECT TO PROTECTIVE ORDER
KINZER V. REMINGTON

(BOLT LOCK)

700 ¢ BOLT ACTION

PROCESS ENGINEERING ESTIMATE - TRIAL AND PILOT SHEET

• SEQUENCE OF OPERATIONS •

MODEL ARBINE COMPONENT FIRING PIN ASSEMBLY PART NO. —

DATE 5-27-80 COMPUTER KOWALSKI SHEET 1 OF 1

OPER. NO.	OPERATION NAME	MACHINE	DEPT. NO.	HOURS DESIGN	HOURS BUILD
	NOTE: SAME AS PRESENT M/600 FIRING PIN ASSEMBLY # 28600 PROCESS EXCEPT FOR THE ADDITIONAL OPERATION				
20	ASSEMBLE DETENT PLUNGER SPRING, DETENT PLUNGER WITH BOLT LATCH TO BOLT PLUG & PIN (CROSS PIN) NOTE: TRY BOLT LATCH FOR FREENESS	BENCH ASSEMBLING FIXTURE	NEW	30	60
	TO DISPATCH AREA				
	TOTAL				

CONFIDENTIAL-SUBJECT TO PROTECTIVE ORDER
KINZER V. REMINGTON

BOLT LOCK PATENT

BOLT LATCH FOR BOLT-ACTION FIREARMS

This invention relates to firearms of the bolt-action type, which have a bolt reciprocable in a receiver between open and closed positions, and rotatable by means of a handle between locked and unlocked relationship to the firearm barrel. The invention is particularly concerned with an improved bolt latch mechanism which is normally operated automatically by the firing and re-cocking of the firearm, but which may be selectively disabled, according to the user's wishes.

In a bolt-action firearm intended for hunting use, it is desirable to provide both a safety, and a bolt latch for securing the bolt locked in a closed position. These two features allow the firearm to be carried in the field loaded and cocked, without risk either of accidental firing, or of the bolt being unlocked by some accidental jar or collision. At the same time, the user should be enabled to open the bolt readily and safely for unloading. Controls for the safety and bolt latch should be simple enough to avoid confusion in poor lighting conditions; should be readily manipulable even by a hunter wearing gloves; and yet should not protrude in a manner either to interfere with manual operation of the firearm, or to be susceptible to inadvertent displacement.

One approach to this question is shown in U. S. Patent 2,514,981 to Walker et al, in which a two-position safety lever also serves as a bolt latch. The safety lever has two arms: a safety arm bearing an eccentric which blocks the sear of the trigger mechanism in a "safe" position of the lever; and another latch arm which engages a notch in the bolt to latch it against rotation. Movement of the safety lever to the "fire" position releases the sear, and also removes

RA-0247

CONFIDENTIAL-SUBJECT TO PROTECTIVE ORDER
KINZER V. REMINGTON

R2539547

the latch arm from engagement with the bolt. This is a satisfactory system; but it does require the safety to be released when the bolt is opened, and therefore calls for proper caution to be exercised when the user wishes to unload the firearm.

Another prior art solution involves a safety lever movable to three positions: one in which the safety and the bolt latch are both engaged; a second, intermediate position which either disengages the bolt latch, or enables it to be manually disengaged, but leaves the safety on; and a third, firing position in which both the safety and the bolt latch are inoperative. Examples of this approach appear in U. S. Patents 2,824,402 to Fischer; 1,318,423 to Williams; 2,869,269 to Couture; and 3,138,888 to Brewer. If a hunter is working in good lighting conditions, without gloves, and with leisure to see that the safety is correctly positioned, these systems are satisfactory. But in the press of urgency and excitement that often arises in the field, and under adverse conditions, error in selecting among three safety positions is not unlikely to occur.

Another solution that has been suggested is to provide a bolt latch that is completely divorced from the safety mechanism. This enables the hunter to unload without concern about changing the condition of a safety he has previously activated. Two examples of such a bolt latch are found in U. S. Patents 1,332,514 to Bader, and 1,669,496 to Stahl. In Bader, a sliding latch, mounted on the side of the bolt plug just behind the bolt handle, is movable to or from latching engagement with the bolt handle by means of a pivoted lever, which is spring-biased toward the latch-engaging position. The latch may be withdrawn either by lever engagement with a shoulder on the firing pin when the

CONFIDENTIAL-SUBJECT TO PROTECTIVE ORDER
KINZER V. REMINGTON

rifle is fired, or by manual rotation of the pivoted lever. After manual opening with the rifle cocked, the pivoted lever must be held manually retracted in order to re-close the bolt.

In the Stahl Patent, a rotatable shaft, formed with a flat and carrying a spring-biased latch plunger, extends tranversely across a mating flat in the firing pin. The cocking of the firing pin mates the two flats so as to turn the shaft and latch plunger into locking engagement with the bolt handle. Upon firing, the bolt handle may be raised, with the shaft and latch plunger now being free of the firing pin and able to rotate to permit this opening movement. After re-cocking, the latch may be retracted manually for unloading the rifle, although like Bader, it must also be held retracted to permit the bolt to be re-closed.

So far as applicant is aware, neither of the Bader nor Stahl latch mechanisms has ever been widely used or accepted. This may be at least in some part due to the awkwardness involved in holding the latches, which are in close proximity to the bolt handles, open with the thumb of a left hand which supports the rifle, while the right hand concurrently opens or closes the bolt handle. This problem might be considerably exacerbated by the wearing of gloves.

The present invention has as its general object the improvement of bolt latch mechanisms for bolt-action rifles which have independently-operable safety devices. The improved mechanism features a simplified construction, involving a single pivoted, spring-loaded lever to fulfill both the functions of an automatically-operated latching element, and a manual latch release. The device provides automatic detenting to releasably secure the latch in a disabled

CONFIDENTIAL-SUBJECT TO PROTECTIVE ORDER
KINZER V. REMINGTON

position when it is manually released. The latch may be readily released or reactivated by the press of a gloved finger, after which the hands are freed to carry out loading, cocking, firing, or unloading operations without further attention to the latch.

According to a preferred embodiment of the invention, the bolt plug of a bolt-action firearm is recessed to receive a latch lever, which is pivotally mounted in the recess for rocking motion to any of three positions: latched by cocking the weapon and closing the bolt handle; unlatched by firing the weapon; and manually disabled and detented in an unlatched condition. A spring and plunger bias the lever toward the latched position, in which a tooth formed at one end of the lever engages in a mating notch in the closed bolt handle. The latch lever has a cam surface so arranged, in the latched position, as to project into the path of motion of the head of the firing pin, which therefore pivots the lever to the unlatched position when the weapon is fired. Subsequent re-cocking and withdrawal of the firing pin head enables the spring-loaded plunger to return the lever automatically to the latched position. The latch lever may be manually rocked beyond the latched position to the disabled position, in which a detent notch formed in the lever engages and interferes with movement of the spring-loaded plunger; the plunger cannot then move the lever toward the latched position until the lever is manually pressed in a direction to release the detent.

FIG. 1 is a fragmentary view in side elevation of a preferred embodiment of the improved bolt latch mechanism, shown in latched relation to the bolt assembly of an illustrative bolt-action firearm, which is shown cocked and ready to fire;

CONFIDENTIAL-SUBJECT TO PROTECTIVE ORDER
KINZER V. REMINGTON

R2539550

FIG. 2 is a fragmentary view in rear elevation of the assembly of FIG. 1;

FIG. 3 is a fragmentary view showing the latch in unlatched position, with the bolt handle raised to unlock the bolt, and the parts of the firearm in fired and uncocked condition;

FIG. 4 is a fragmentary cross-sectional view in side elevation, with the parts in the same latched and cocked condition as in FIG. 1;

FIG. 5 is a view similar to FIG. 4, but showing the firing pin in a fired position, and the latch mechanism in an unlatched position; and

FIG. 6 is a view similar to FIGS. 4 and 5, but showing the firing pin in a cocked position, and the latch mechanism detented in a disabled position.

The improved bolt latch mechanism is broadly applicable to bolt-action firearms of various designs, but is shown for purposes of illustration in a bolt-action rifle of substantially the same type as is shown in more detail in U. S. Patents 2,585,195 to Walker and 2,514,981 to Walker et al, which were assigned to the owner of the present application. The rifle includes a hollow cylindrical bolt 10 which is mounted for rotation and longitudinal reciprocation in a receiver (not shown), by means of a handle 12 brazed or otherwise secured to the bolt. The bolt, when closed against the breech of the rifle barrel, may be locked by means of conventional lugs formed on its forward end (not shown), which are engaged by rotating the handle down into the position shown in FIGS. 1 and 2, or unlocked by raising the handle to the position of FIG. 3. The bolt is shown in its

CONFIDENTIAL-SUBJECT TO PROTECTIVE ORDER
KINZER V. REMINGTON

R2539551

closed longitudinal position with respect to elements of a fire control mechanism which includes a sear 34 and a trigger 35. With the bolt turned to its unlocked position of FIG. 3, it may be pulled longitudinally to the left to open the action for loading and unloading cartridges, and for cocking a firing pin 24.

A bolt plug 16 has a threaded extension 18 which extends forwardly into threaded engagement with internal threads 14 formed in the bolt, thus drivingly connecting the bolt and bolt plug for joint longitudinal reciprocation, but permitting the bolt to rotate independently. The bolt plug is formed with recessed flats 19 for sliding engagement with mating surfaces formed on the receiver (not shown), to restrain the bolt plug from rotating with the bolt. The bolt plug also has a cylindrical recess 20 slidably receiving an enlarged head 26 of the firing pin 24, and a slot 22 through which a sear-engaging lug 28 and a cocking arm 30 of the firing pin extend in freely-slidable but non-rotatable relation.

In the relative positions of these elements shown in FIGS. 1 and 4, the firing pin 24 is cocked, with an oblique face 42 of the lug 28 bearing against a mating face 40 of the sear 34. The firing pin is continuously urged toward a firing position, that is, toward the right in the drawings, by a conventional firing pin spring contained within the bolt. The sear, pivoted on a pin 36, is held in its illustrated angular position by the engagement between a step 39 in the sear and a connector 37 attached to the trigger 35, thereby restraining the firing pin in its cocked position. To fire the weapon, the trigger is pulled to move the connector 37 to the position shown in FIG. 3. The angle of the faces 40 and 42 with respect to the longitudinal axis of the bolt and firing pin is

CONFIDENTIAL-SUBJECT TO PROTECTIVE ORDER
KINZER V. REMINGTON

R2539552

such that the firing pin spring exerts a downward component of force on the sear that overcomes the upward force exerted by a sear spring 33, and pivots the sear counterclockwise to the position shown in FIG. 3, permitting the firing pin to be driven forwardly to its fired position shown in FIG. 5.

In the fired condition, the cocking arm 30 of the firing pin extends forwardly into the deepest part of a cocking cam 32 cut into the bolt 10, which is circumferentially aligned with the cocking arm when the bolt is closed (compare FIGS. 1 and 3). After firing, raising the bolt handle to the position of FIG. 3 causes the cocking arm to ride along the curved surface of the cam 32, and retracts the firing pin back toward the cocked position. Then as the bolt is opened and re-closed by a reciprocating movement along its major axis, the lug face 42 engages against the re-elevated sear face 40 and retains the firing pin in the cocked condition of FIGS. 1 and 4 once more.

The firearm action thus far described is conventional in design, and is further illustrated and described in the aforementioned Patents 2,585,195 and 2,514,981. Therefore, no further detailed description of its operation and design is believed necessary. A safety mechanism of any type suitable to such an action may be utilized as desired, and the bolt latch of the present invention is intended to operate entirely independently of the safety mechanism. As illustrated, the sear 34 is provided with a cam lobe 38 for cooperation with a safety lever having an eccentric, of the kind disclosed in Patent 2,514,981, which is selectively operable to block the sear against movement from the cocked position of FIG. 1. This is intended merely as an illustrative example of various safety mechanisms that might be used in conjunction with the improved bolt

CONFIDENTIAL-SUBJECT TO PROTECTIVE ORDER
KINZER V. REMINGTON

latch, which will now be described.

The bolt plug 16 is formed with a radially-extending recess 50, in which a latch lever 51 is pivotally supported on a pin 60 received in a tranverse hole 58. The lever 51 has a tooth 52 at its forward end, which, in a latched position of FIGS. 1 and 4, engages in a locking notch 62 at the rear of the bolt 10 and handle 12 to prevent the bolt from being moved from its closed and locked position. A plunger 68 is slidably received in a blind hole 64 in the bolt plug, and is urged against a rear face 53 of the lever 51 by a spring 66 to bias the lever in a clockwise direction toward the latched position.

The latch lever 51 is formed with a planar cam surface 55 which projects into the recess 20 in the latched position of FIG. 4, into the path of movement of the outer cylindrical surface of the firing pin head 26 from its cocked position of FIG. 4 to its fired position of FIG. 5. In the latched position, the cam surface 55 extends in a direction inclined downwardly in a forward direction with respect to the longitudinal axis A of the firing pin motion. When the trigger 35 is pulled to release the firing pin, the forwardly-moving cylindrical head 26 engages the cam surface 55 and pivots the lever 51 to the unlatched position shown in FIG. 5, against the bias of the spring-loaded plunger 68. The bolt 10 is now free to turn, and may be unlocked and opened. The surface 55 continues to be inclined downwardly in a forward direction, for a reason which will appear, but at a greatly reduced angle to the bolt axis A.

Re-cocking of the firing pin 24 frees the cam surface 55 from the head 26. This allows the plunger 68 to automatically re-latch the lever 51 in the position

CONFIDENTIAL-SUBJECT TO PROTECTIVE ORDER
KINZER V. REMINGTON

of FIG. 4, as the bolt handle is closed and the locking notch 62 becomes aligned with the tooth 52.

The rear face 53 of the latch lever is formed with a detent notch 70, which is not reached by the plunger 68 sliding along the face 53 during the pivotal movements of the lever between the latched position of FIG. 4 and the unlatched position of FIG. 5. However, the lever may be rocked, by applying finger pressure to a projecting V-shaped upper surface 54, counterclockwise into a further disabled position shown in FIG. 6, in which the plunger 68 seats in the notch 70. The engagement between the plunger and the notch restrains the lever against being rotated by the bias of the spring 66, and thus detents the lever in this disabled position.

To provide for an ample arcuate displacement between the unlatched and disabled positions of the lever 51, the surface 55 must have some clearance from the head 26. Thus this surface is inclined downwardly at a small angle to the axis A in both the unlatched and the disabled positions, but in opposite axial directions.

When placed in the disabled, detented position of FIG. 6, the latch lever 51 will remain inoperative and unaffected by movement of the firing pin, until such time as finger pressure is applied to it in a clockwise direction to release the plunger 68 from the notch 70, and thus restore the parts to the normal automatically-operating positions of FIGS. 4 and 5.

CONFIDENTIAL-SUBJECT TO PROTECTIVE ORDER
KINZER V. REMINGTON

R2539555

In a hunting situation in the field, where a series of shots may be fired, the bolt is cyclically opened to reload the rifle, and reclosed to cock the firing pin for the next shot; and the latch lever automatically cycles between the latched and unlatched positions of FIGS. 4 and 5. Assuming, however, that the hunter wishes to unload the cocked and latched rifle without firing previously-loaded live rounds, he need not release the safety to do so. He merely presses the latch lever 51 into the disabled position of FIG. 6, and opens the bolt with the safety engaged. When he next wishes to reload the rifle, the latch lever should be pressed to release it from the detented disabled condition, so that its normal automatic operation is restored.

The latch lever is preferably positioned near the top of the bolt plug as shown, so that it is readily visible and easily pressed even with a gloved hand, but does not protrude in such a location as to be readily subject to accidental operation by the user's hand carrying the rifle, or by jarring against other objects.

CONFIDENTIAL-SUBJECT TO PROTECTIVE ORDER
KINZER V. REMINGTON

R2539556

CLAIM 1. In a bolt-action firearm of the type having a bolt rotatably mounted for movement between open and closed positions; a bolt plug non-rotatably mounted and having threaded connection with said bolt; a firing pin mounted reciprocably in said bolt plug for movement between fired and cocked positions with respect to said bolt; the improved latch mechanism which comprises:

A latch lever having a tooth; said bolt being formed with a notch arranged for receiving said tooth when said bolt is rotated to its closed position; said latch lever being pivotally mounted on said bolt plug for pivotal movement between a latched position in which said tooth is engaged in said notch to lock said bolt against rotation, and an unlatched position in which said tooth is disengaged from said notch to release said bolt; means for biasing said latch lever toward said latched position; said latch lever having cam means constructed and arranged to cooperate with said firing pin to pivot said latch lever from said latched to said unlatched position thereof in response to movement of said firing pin from said cocked to said fired position thereof; releasable detent means for said latch lever; said latch lever being further pivotally movable to a detented disabled position in which said detent means is operable to releasably secure said latch lever against movement by said biasing means.

CLAIM 2. A bolt latch mechanism as recited in CLAIM 1, said latch lever being selectively manually pivotable between said detented disabled position and said latched and unlatched positions by applying pressure in alternate angular directions to said latch lever.

RA-0247

CONFIDENTIAL-SUBJECT TO PROTECTIVE ORDER
KINZER V. REMINGTON

R2539557

CLAIM 3. In a bolt-action firearm of the type having a bolt rotatably mounted for movement between open and closed positions; a bolt plug non-rotatably mounted and having threaded connection with said bolt; a firing pin mounted reciprocably in said bolt plug for movement between fired and cocked positions with respect to said bolt; the improved bolt latch mechanism which comprises:

a latch lever having a tooth; said bolt plug being formed with a recess receiving said latch lever; said bolt being formed with a notch arranged for receiving said tooth when said bolt is rotated to said closed position; means mounting said latch lever in said recess for pivotal movement between a latched position in which said tooth is engaged in said notch to latch said bolt against rotation with respect to said bolt plug, and an unlatched position in which said tooth is disengaged from said notch to release said bolt; spring-biased plunger means mounted in said bolt plug for biasing said latch lever toward said latched position;

said latch lever having cam means arranged to project when said latch lever is in said latched position thereof, into the path of reciprocation of said firing pin, whereby movement of said firing pin to said fired position normally pivots said latch lever to said unlatched position, and movement of said firing pin to said cocked position normally permits said spring-biased plunger means to pivot said latch lever to said latched position;

said latch lever having a detent notch, and being manually pivotable in said recess to a disabled position in which said tooth is released from said locking notch and said detent notch engages said

CONFIDENTIAL-SUBJECT TO PROTECTIVE ORDER
KINZER V. REMINGTON

R2539558

plunger means to interfere with rotation of said latch lever and thereby render said plunger means inoperative to pivot said latch lever toward said latched position thereof.

CLAIM 4. A bolt latch mechanism as recited in CLAIM 3, said latch lever being manually pivotable from said disabled position toward said latched and unlatched positions thereof, by applying pressure sufficient to displace said plunger means from said detent notch.

CLAIM 5. A bolt latch mechanism as recited in CLAIM 3, said latch lever having a face area normally bearing against said plunger means for relative sliding movement as said latch lever is pivoted between said latched and unlatched positions, said detent notch being formed in said face in a location spaced from said bearing area to engage said plunger means in said disabled position of said latch lever.

CLAIM 6. A bolt latch mechanism as recited in CLAIM 3, said latch lever being pivotable: in a first angular direction into ~~said~~ unlatched position; in an opposite angular direction into said latched position; and beyond ~~said un~~latched position in said first angular direction into said disabled position.

CLAIM 7. A bolt latch mechanism as recited in CLAIM 6, said firing pin being formed with a head having a peripheral surface cylindrical about ~~the~~ axis of movement of said firing pin; said cam means comprising a cam surface formed on said latch ~~lever;~~ said latch lever being constructed and pivotally mounted so that in said latched position thereof, ~~said cam~~ surface is inclined toward the axis of reciprocation of said firing pin in the direction of movement of said head from said cocked to said fired positions thereof, for sliding engagement by said head surface.

RA-0247

CONFIDENTIAL-SUBJECT TO PROTECTIVE ORDER
KINZER V. REMINGTON

R2539559

CLAIM 8. A bolt latch mechanism as recited in CLAIM 7, said latch lever being constructed and pivotally mounted so that in said unlatched position thereof, said cam surface slidably engages said head surface and remains inclined to the axis of reciprocation of said firing pin in the direction of movement of said head from said cocked to said fired positions thereof, but at a smaller angle than in said latched position of said latch lever, thereby permitting further ~~pivotal~~ movement of said latch lever in said first angular direction into said disabled position without producing binding interference between said cam surface and said head surface.

CLAIM 9. A bolt latch mechanism as recited in CLAIM 3, said latch lever projecting from said bolt plug recess outwardly of said bolt plug, and having a V-shaped upper surface for manual rocking between said disabled position and said latched and unlatched positions.

RA-0247

CONFIDENTIAL-SUBJECT TO PROTECTIVE ORDER
KINZER V. REMINGTON

R2539560

ABSTRACT OF THE DISCLOSURE

A bolt-action firearm, of the type having a bolt rotatably movable between closed and open positions, has an improved bolt latch mechanism which is operable independently of a safety mechanism. The latch normally locks the bolt in closed position automatically when the firing pin is cocked and releases the bolt upon firing; but it may be manually moved to a disabled position, in which it is detented. The latch mechanism is recessed in the bolt plug in such fashion that it is readily visible and accessible, yet does not interfere with normal manual operation of the firearm, and does not protrude so that it might be accidentally displaced.

RA-0247

CONFIDENTIAL-SUBJECT TO PROTECTIVE ORDER
KINZER V. REMINGTON

R2539561

FIG. 4.

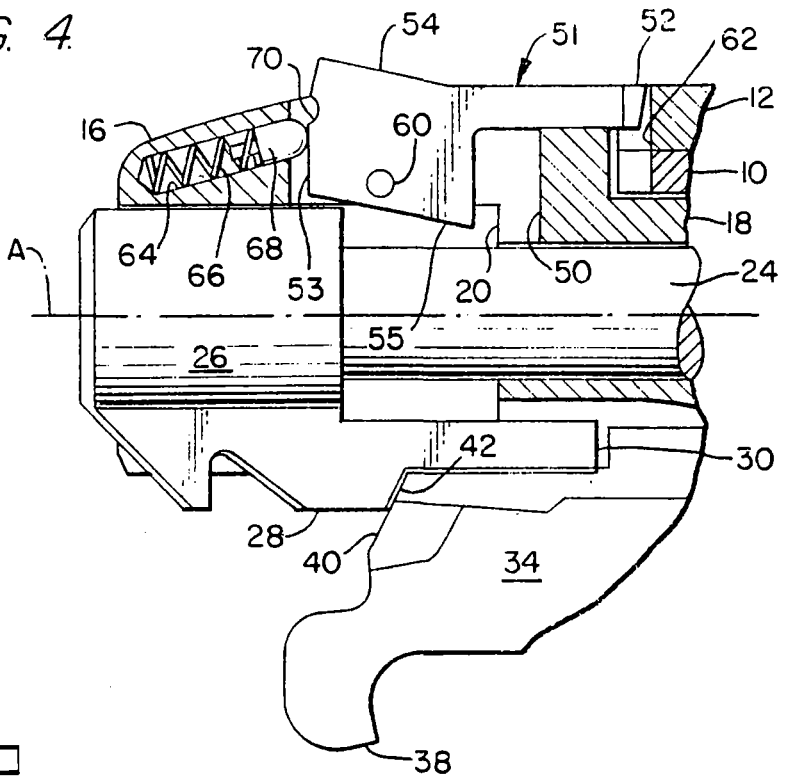

FIG. 5.

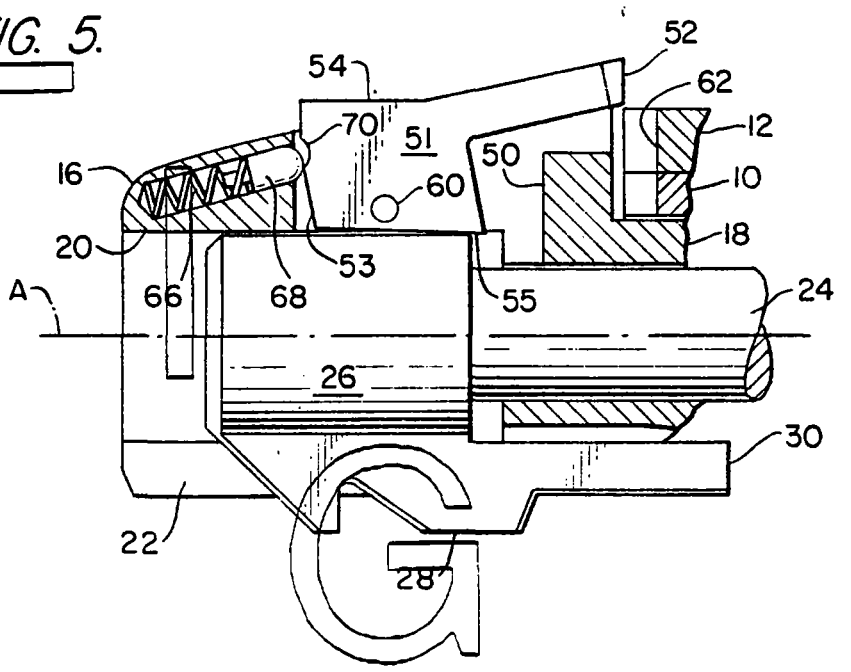

FIG. 6.

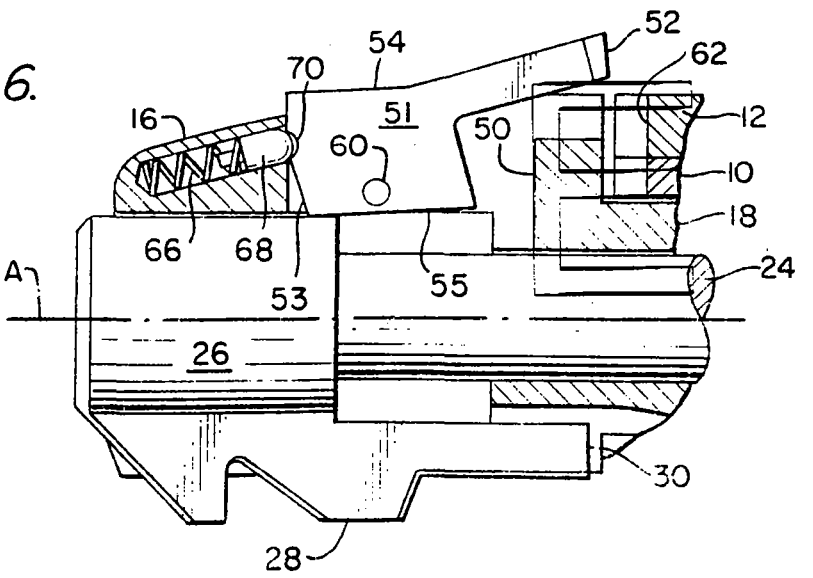

CONFIDENTIAL-SUBJECT TO PROTECTIVE ORDER
KINZER V. REMINGTON

FIG. 1.

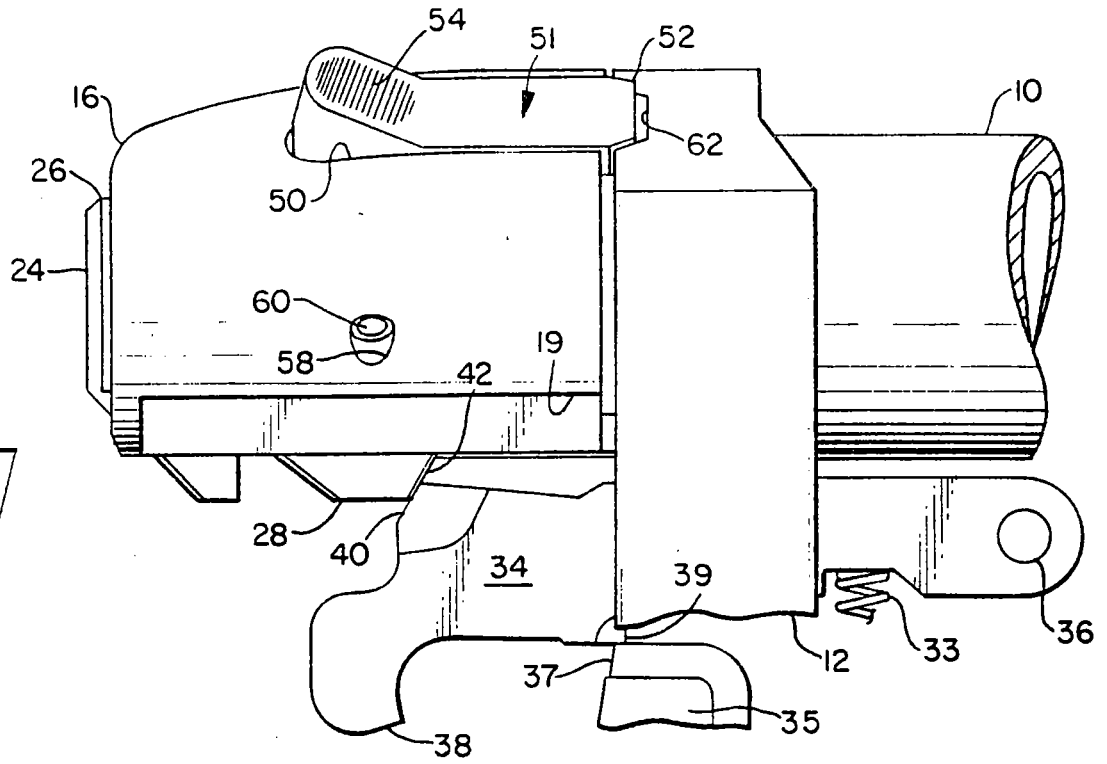

FIG. 2.

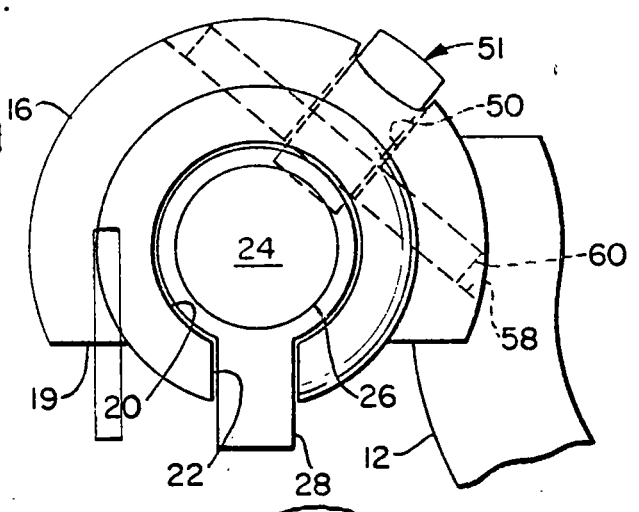

FIG. 3.

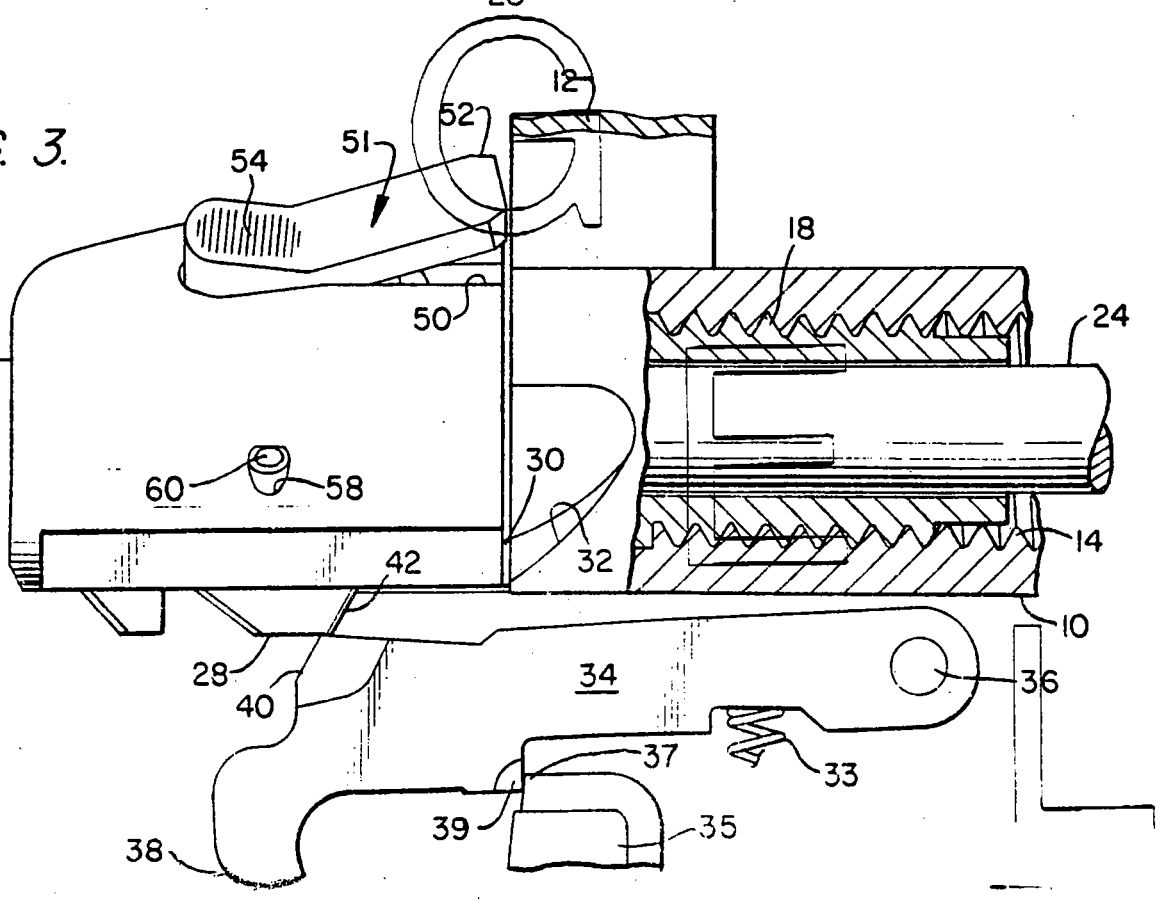

FIG. 1.

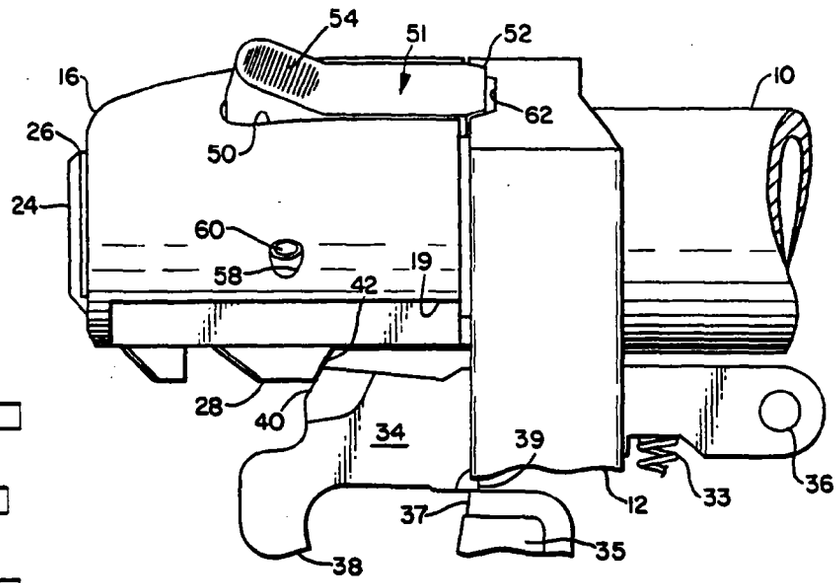

FIG. 2.

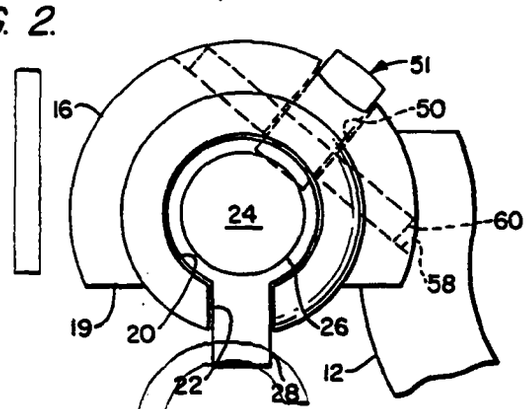

FIG. 3.

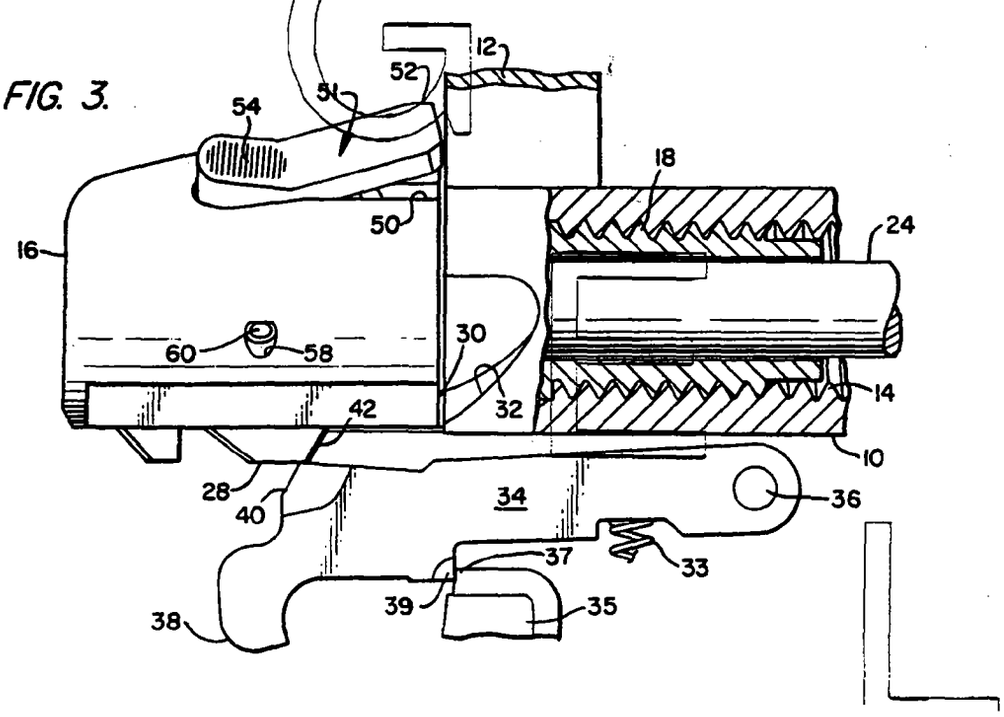

CONFIDENTIAL-SUBJECT TO PROTECTIVE ORDER
KINZER V. REMINGTON

R2539564

United States Patent [19]

Martin

[11] **4,445,292**

[45] **May 1, 1984**

[54] **BOLT LATCH FOR BOLT-ACTION FIREARM**

[75] Inventor: **Fred E. Martin**, Frankfort, N.Y.

[73] Assignee: **Remington Arms Company, Inc.**, Bridgeport, Conn.

[21] Appl. No.: **511,449**

[22] Filed: **Jul. 7, 1983**

Related U.S. Application Data

[63] Continuation of Ser. No. 290,693, Aug. 6, 1981.

[51] **Int. Cl.**[3] **F41C 11/06**

[52] **U.S. Cl.** ..... **42/16**; 42/69 A; 42/70 R

[58] **Field of Search** ..... 42/16, 69 A, 70 R, 70 F

[56] **References Cited**

U.S. PATENT DOCUMENTS

1,318,423 10/1919 Williams 42/16
1,322,514 11/1919 Bader 42/16
3,138,888 6/1964 Brewer ..... 42/70 E
4,305,218 12/1981 Godsey ..... 42/70 R X

Primary Examiner—Charles T. Jordan
Assistant Examiner—Ted L. Parr
Attorney, Agent, or Firm—Nicholas Skovran; William L. Ericson; Barry Estrin

[57] **ABSTRACT**

A bolt-action firearm, of the type having a bolt rotatably movable between closed and open positions, has an improved bolt latch mechanism which is operable independently of a safety mechanism. The latch locks the bolt in closed position automatically when the firing pin is cocked, and releases the bolt upon firing. The latch mechanism is recessed in the bolt plug in such fashion that it is readily visible and accessible, yet does not interfere with normal manual operation of the firearm, and does not protrude so that it might readily be displaced accidentally. In one embodiment, the latch may be manually displaced to or from a disabled position, in which it is releasably detented.

7 Claims, 6 Drawing Figures

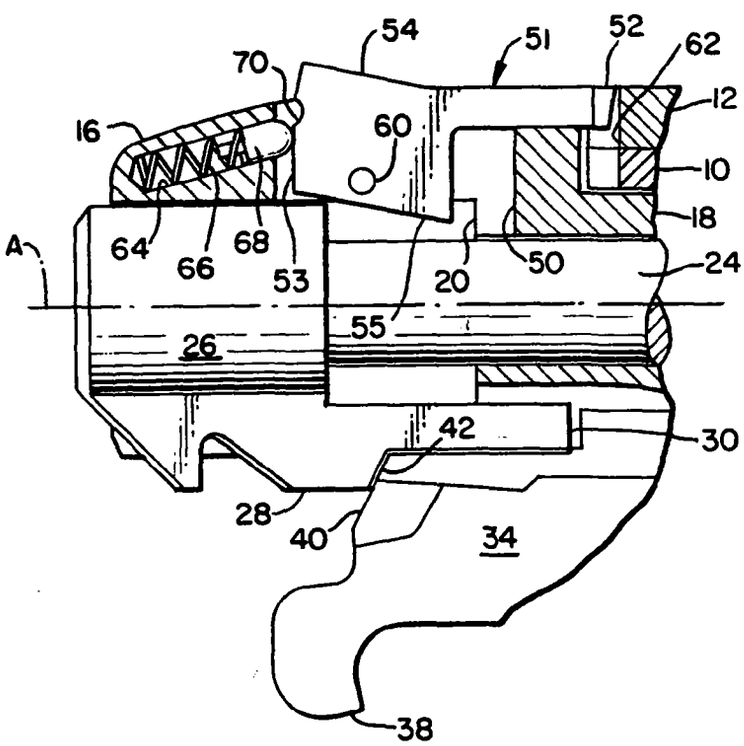

CONFIDENTIAL-SUBJECT TO PROTECTIVE ORDER
KINZER V. REMINGTON

R2539565

FIG. 4.

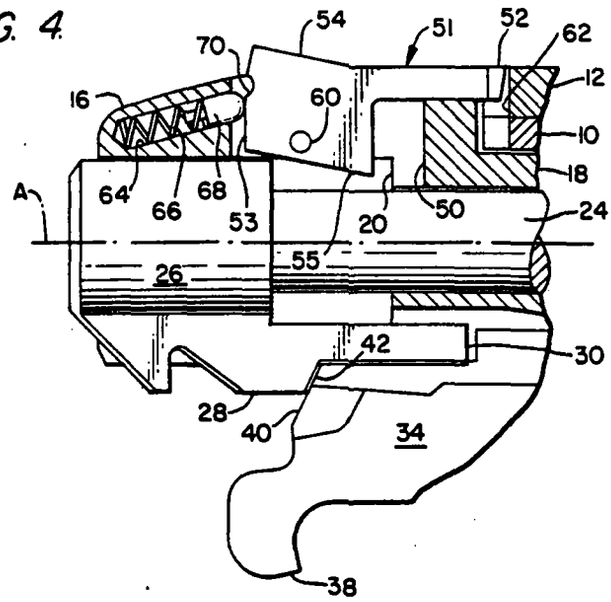

FIG. 5.

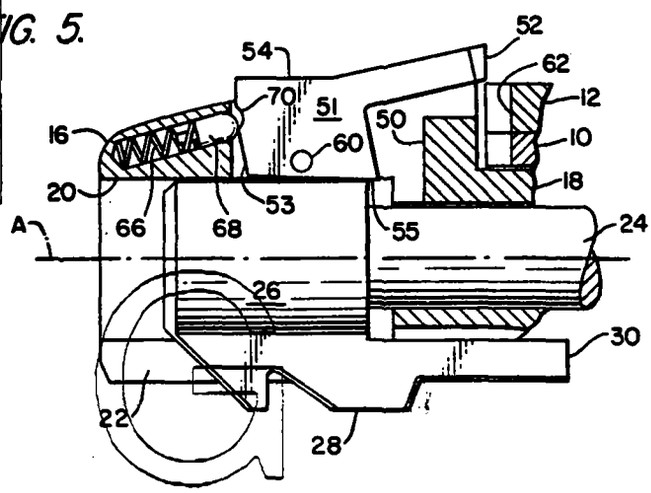

FIG. 6.

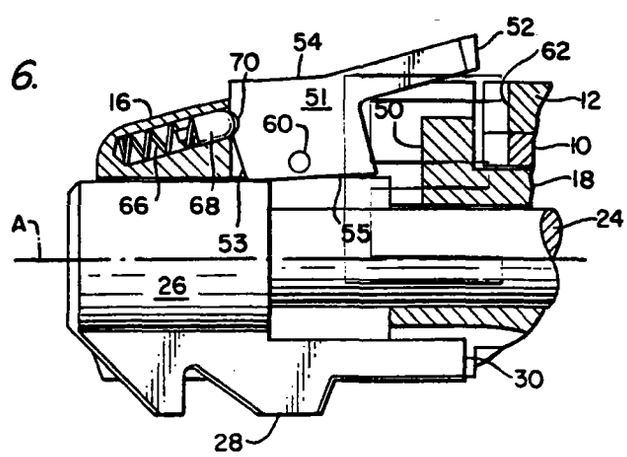

CONFIDENTIAL-SUBJECT TO PROTECTIVE ORDER
KINZER V. REMINGTON

BOLT LATCH FOR BOLT-ACTION FIREARM

This application is a continuation of application Ser. No. 290,693 filed Aug. 6, 1981.

This invention relates to firearms of the bolt-action type, which have a bolt reciprocable in a receiver between open and closed portions. and rotatable by means of a handle between locked and unlocked relationship to the firearm barrel. The invention is particularly concerned with an improved bolt latch mechanism which is normally operated automatically by the firing and recocking of the firearm, but which may be selectively disabled, according to the user's wishes.

In a bolt-action firearm intended for hunting use, it is desirable to provide both a safety, and a bolt latch for securing the bolt locked in a closed position. These two features allow the firearm to be carried in the field loaded and cocked, without risk either of accidental firing, or of the bolt being unlocked by some accidental jar or collision. At the same time, the user should be enabled to open the bolt readily and safely for unloading. Controls for the safety and bolt latch should be simple enough to avoid confusion in poor lighting conditions; should be readily manipulable even by a hunter wearing gloves; and yet should not protrude in a manner either to interfere with manual operation of the firearm, or to be susceptible to inadvertent displacement.

One approach to this question is shown in U.S. Pat. No. 2,514,981 to Walker et al, in which a two-position safety lever also serves as a bolt latch. The safety lever has two arms: a safety arm bearing an eccentric which blocks the sear of the trigger mechanism in a "safe" position of the lever; and another latch arm which engages a notch in the bolt to latch it against rotation. Movement of the safety lever to the "fire" position releases the sear, and also removes the latch arm from engagement with the bolt. This is a satisfactory system; but it does require the safety to be released when the bolt is opened, and therefore calls for proper caution to be exercised when the user wishes to unload the firearm.

Another prior art solution involves a safety lever movable to three positions: one in which the safety and the bolt latch are both engaged; a second, intermediate position which either disengages the bolt latch, or enables it to be manually disengaged, but leaves the safety on; and a third, firing position in which both the safety and the bolt latch are inoperative. Examples of this approach appear in U.S. Pat. Nos. 2,824,402 to Fischer; 1,318,423 to Williams; 2,869,269 to Couture; and 3,138,888 to Brewer. If a hunter is working in good lighting conditions, without gloves, and with leisure to see that the safety is correctly positioned, these systems are satisfactory. But in the press of urgency and excitement that often arises in the field, and under adverse conditions, error in selecting among three safety positions is not unlikely to occur.

Another solution that has been suggested is to provide a bolt latch that is completely divorced from the safety mechanism. This enables the hunter to unload without concern about changing the condition of a safety he has previously activated. Two examples of such a bolt latch are found in U.S. Pat. Nos. 1,322,514 to Bader, and 1,669,496 to Stahl. In Bader, a sliding latch, mounted on the side of the bolt plug just behind the bolt handle, is movable to or from latching engagement with

the bolt handle by means of a pivoted lever, which is spring-biased toward the latch-engaging position. The latch may be withdrawn either by lever engagement with a shoulder on the firing pin when the rifle is fired, or by manual rotation of the pivoted lever. After manual opening with the rifle cocked, the pivoted lever must be held manually retracted in order to re-close the bolt.

In the Stahl Patent, a rotatable shaft, formed with a flat and carrying a spring-biased latch plunger, extends tranversely across a mating flat in the firing pin. The cocking of the firing pin mates the two flats so as to turn the shaft and latch plunger into locking engagement with the bolt handle. Upon firing, the flats disengage so that the bolt handle may be raised, with the shaft and latch plunger now being free of the firing pin and able to rotate to permit this opening movement. If it is desired to unload the rifle with the firing pin cocked, the latch plunger may be retracted manually to permit the bolt to be opened. The latch plunger must once again be held retracted to permit the bolt to be re-closed; this disadvantage is shared by Bader and Stahl.

The present invention has as its general object the improvement of bolt latch mechanisms for bolt-action rifles which have independently-operable safety devices. The improved mechanism features a simplified construction, involving a single pivoted, spring-loaded latch lever, which is automatically operated by the displacements of a firing pin during cocking and firing. In one embodiment, a detent is provided so that the latch is selectively operable manually to releasably secure it in a disabled position. The latch may readily be disabled or reactivated by the press of even a gloved finger, after which the hands are free to carry out loading, cocking, firing, or unloading operations without further attention to the latch.

According to the invention, the bolt plug of a bolt-action firearm is recessed to receive a latch lever, which is pivotally mounted in the recess for rocking motion to either of two positions: latched by cocking the weapon and closing the bolt handle; or unlatched by firing the weapon. A spring and plunger bias the lever toward the latched position, in which a tooth formed at one end of the lever engages in a mating notch in the closed bolt handle. The latch lever has a cam surface so arranged, in the latched position, as to project into the path of motion of the head of the firing pin, which therefore pivots the lever to the unlatched position when the weapon is fired. Subsequent re-cocking and withdrawal of the firing pin head enables the spring-loaded plunger to return the lever automatically to the latched position.

In one embodiment, the latch lever may be manually rocked beyond the latched position to a disabled position, in which a detent notch formed in the lever engages and interferes with movement of the spring-loaded plunger. The plunger cannot then move the lever toward the latched position until the lever is manually pressed in a direction to release the detent and thus restore automatic operation.

FIG. 1 is a fragmentary view in side elevation of one embodiment of the improved bolt latch mechanism, shown in latched relation to the bolt assembly of an illustrative bolt-action firearm, which is shown cocked and ready to fire;

FIG. 2 is a fragmentary view in rear elevation of the assembly of FIG. 1;

FIG. 3 is a fragmentary view showing the latch in unlatched position, with the bolt handle raised to un-

CONFIDENTIAL-SUBJECT TO PROTECTIVE ORDER
KINZER V. REMINGTON

lock the bolt, and the parts of the firearm in fired and uncocked condition;

FIG. 4 is a fragmentary cross-sectional view in side elevation, with the parts in the same latched and cocked condition as in FIG. 1;

FIG. 5 is a view similar to FIG. 4, but showing the firing pin in a fired position, and the latch mechanism is an unlatched position; and

FIG. 6 is a view similar to FIGS. 4 and 5, but showing the firing pin in a cocked position, and the latch mechanism detented in a disabled position.

The improved bolt latch mechanism is broadly applicable to bolt-action firearms of various designs, but is shown for purposes of illustration in a bolt-action rifle of substantially the same type as is shown in more detail in U.S. Pat. Nos. 2,585,195 to Walker and 2,514,981 to Walker et al, which were assigned to the owner of the present application. The rifle includes a hollow cylindrical bolt 10 which is mounted for rotation and longitudinal reciprocation in a receiver (not shown), by means of a handle 12 brazed or otherwise secured to the bolt. The bolt, when closed against the breech of the rifle barrel, may be locked by means of conventional lugs formed on its forward end (not shown), which are engaged by rotating the handle down into the position shown in FIGS. 1 and 2, or unlocked by raising the handle to the position of FIG. 3. The bolt is shown in its closed longitudinal position wih respect to elements of a fire control mechanism which includes a sear 34 and a trigger 35. With the bolt turned to its unlocked position of FIG. 3, it may be pulled longitudinally to the left to open the action for loading and unloading cartridges, and for cocking a firing pin 24.

A bolt plug 16 has a threaded extension 18 which extends forwardly into threaded engagement with internal threads 14 formed in the bolt, thus drivingly connecting the bolt and bolt plug for joint longitudinal reciprocation, but permitting the bolt to rotate independently. The bolt plug is formed with recessed flats 19 for sliding engagement with mating surfaces formed on the receiver (not shown), to restrain the bolt plug from rotating with the bolt. The bolt plug also has a cylindrical recess 20 slidably receiving an enlarged head 26 of the firing pin 24, and a slot 22 through which a sear-engaging lug 28 and a cocking arm 30 of the firing pin extend in freely-slidable but non-rotatable relation.

In the relative positions of these elements shown in FIGS. 1 and 4, the firing pin 24 is cocked, with an oblique face 42 of the lug 28 bearing against a mating face 40 of the sear 34. The firing pin is continuously urged toward a firing position, that is, toward the right in the drawings, by a conventional firing pin spring contained within the bolt. The sear, pivoted on a pin 36, is held in its illustrated angular position by the engagement between a step 39 in the sear and a connector 37 attached to the trigger 35, thereby restraining the firing pin in its cocked position. To fire the weapon, the trigger is pulled to move the connector 37 to the position shown in FIG. 3. The angle of the faces 40 and 42 with respect to the longitudinal axis of the bolt and firing pin is such that the firing pin spring exerts a downward component of force on the sear that overcomes the upward force exerted by a sear spring 33, and pivots the sear counterclockwise to the position shown in FIG. 3, permitting the firing pin to be driven forwardly to its fired position shown in FIG. 5.

In the fired condition, the cocking arm 30 of the firing pin extends forwardly into the deepest part of a cocking cam 32 cut into the bolt 10, which is circumferentially aligned with the cocking arm when the bolt is closed (compare FIGS. 1 and 3). After firing, raising the bolt handle to the position of FIG. 3 causes the cocking arm to ride along the curved surface of the cam 32, and retracts the firing pin back toward the cocked position. Then as the bolt is opened and re-closed by a reciprocating movement along its major axis, the lug face 42 engages against the re-elevated sear face 40 and retains the firing pin in the cocked condition of FIGS. 1 and 4 once more.

The firearm action thus far described is conventional in design, and is further illustrated and described in the aforementioned U.S. Pat. Nos. 2,585,195 and 2,514,981. Therefore, no further detailed description of its operation and design is believed necessary. A safety mechanism of any type suitable to such an action may be utilized as desired, and the bolt latch of the present invention is intended to operate entirely independently of the safety mechanism. As illustrated, the sear 34 is provided with a cam lobe 38 for cooperation with a safety lever having an eccentric, of the kind disclosed in U.S. Pat. No. 2,514,981, which is selectively operable to block the sear against movement from the cocked position of FIG. 1. This is intended merely as an illustrative example of various safety mechanisms that might by used in conjunction with the improved bolt latch, which will now be described.

The bolt plug 16 is formed with a radially-extending recess 50, in which a latch lever 51 is pivotally supported on a pin 60 received in a tranverse hole 58. The lever 51 has a tooth 52 at its forward end, which, in a latched position of FIGS. 1 and 4, engages in a locking notch 62 at the rear of the bolt 10 and handle 12 to prevent the bolt from being moved from its closed and locked position. A plunger 68 is slidably received in a blind hole 64 in the bolt plug, and is urged against a rear face 53 of the lever 51 by a spring 66 to bias the lever in a clockwise direction toward the latched position.

The latch lever 51 is formed with a planar cam surface 55 which projects into the recess 20 in the latched position of FIG. 4, into the path of movement of the outer cylindrical surface of the firing pin head 26 from its cocked position of FIG. 4 to its fired position of FIG. 5. In the latched position, the cam surface 55 extends in a direction inclined downwardly in a forward direction with respect to the longitudinal axis A of the firing pin motion. When the trigger 35 is pulled to release the firing pin, the forwardly-moving cylindrical head 26 engages the cam surface 55 and pivots the lever 51 to the unlatched position shown in FIG. 5, against the bias of the spring-loaded plunger 68. The bolt 10 is now free to turn, and may be unlocked and opened. The surface 55 continues to be inclined downwardly in a forward direction, for a reason which will appear, but at a greatly reduced angle to the bolt axis A.

Re-cocking of the firing pin 24 frees the cam surface 55 from the head 26. This allows the plunger 68 to automatically re-latch the lever 51 in the position of FIG. 4, as the bolt handle is closed and the locking notch 62 becomes aligned with the tooth 52.

In the illustrated embodiment, the rear face 53 of the latch lever is formed with a detent notch 70, which is not reached by the plunger 68 sliding along the face 53 during the pivotal movements of the lever between the latched position of FIG. 4 and the unlatched position of FIG. 5. However, the lever may be rocked, by applying finger pressure to a projecting V-shaped upper surface

CONFIDENTIAL-SUBJECT TO PROTECTIVE ORDER
KINZER V. REMINGTON

R2539568

54, counterclockwise into a further disabled position shown in FIG. 6, in which the plunger 68 seats in the notch 70. The engagement between the plunger and the notch restrains the lever against being rotated by the bias of the spring 66, and thus detents the lever in this disabled position.

To provide for an ample arcuate displacement between the unlatched and disabled positions of the lever 51, the surface 55 must have some clearance from the head 26. Thus this surface is inclined downwardly at a small angle to the axis A in both the unlatched and the disabled positions, but in opposite axial directions.

When placed in the disabled, detented position of FIG. 6, the latch lever 51 will remain inoperative and unaffected by movement of the firing pin, until such time as finger pressure is applied to it in a clockwise direction to release the plunger 68 from the notch 70, and thus restore the parts to the normal automatically-operating positions of FIGS. 4 and 5.

In a hunting situation in the field, where a series of shots may be fired, the bolt is cyclically opened to reload the rifle, and reclosed to cock the firing pin for the next shot; and the latch lever automatically cycles between the latched and unlatched positions of FIGS. 4 and 5. Assuming, however, that the hunter wishes to unload the cocked and latched rifle without firing previously-loaded live rounds, he need not release the safety to do so. He merely presses the latch lever 51 into the disabled position of FIG. 6, and opens the bolt with the safety engaged. When he next wishes to reload the rifle, the latch lever should be pressed to release it from the detented disabled condition, so that its normal automatic operation is restored.

The latch lever 51 is preferably positioned near the top of the bolt plug as shown, so that it is readily visible and easily pressed even with a gloved hand, but does not protrude in such a location as to be readily subject to accidental operation by the user's hand carrying the rifle, or by jarring against other objects.

I claim:

1. In a bolt-action firearm of the type having a substantially cylindrical bolt rotatably mounted for movement between open and closed positions; a bolt plug non-rotatably mounted and having threaded connection with said bolt; a firing pin mounted reciprocably in said bolt plug for movement between fired and cocked positions with respect to said bolt; the improved bolt latch mechanism which comprises;

a latch lever having a tooth; said bolt plug being formed with a recess receiving said latch lever; said bolt being formed with a locking notch opening onto an outer peripheral surface thereof at a location radially aligned with said tooth upon rotation of said bolt to said closed position; means mounting said latch lever in said recess for pivotal movement about an axis substantially perpendicular to the longitudinal axis of said cylindrical bolt between a first, latched position in which said tooth is engaged in said locking notch to latch said bolt against rotation with respect to said bolt plug, and a second, unlatched position in which said tooth is disengaged from said locking notch to release said bolt for rotation; spring-biased plunger means mounted in said bolt plug for biasing said latch lever toward said first position;

said latch lever having cam means arranged to project, upon pivotal movement of said latch lever into said first position, into the path of reciprocation of said firing pin, whereby movement of said firing pin to said fired position normally pivots said latch lever from said first to said second position to unlatch said bolt, and movement of said firing pin to said cocked position normally permits said spring-biased plunger means to pivot said latch lever from said second to said first position to latch said bolt;

said latch lever having a detent notch, and being manually pivotable in said recess to a third, disabled position in which said cam means is withdrawn from the path of reciprocation of said firing pin, said tooth is released from said locking notch and said detent notch engages said plunger means to interfere with rotation of said latch lever from said third position, and thereby render said plunger means inoperative to pivot said latch lever toward said first position thereof.

2. A bolt latch mechanism as recited in claim 1, said latch lever being manually pivotable from said disabled position toward said latched and unlatched positions thereof, by applying pressure sufficient to displace said plunger means from said detent notch.

3. A bolt latch mechanism as recited in claim 1, said latch lever having a face area normally bearing against said plunger means for relative sliding movement as said latch lever is pivoted between said latched and unlatched positions, said detent notch being formed in said face in a location spaced from said bearing area to engage said plunger means in said disabled position of said latch lever.

4. A bolt latch mechanism as recited in claim 1, said latch lever being pivotable: in a first angular direction into said unlatched position; in an opposite angular direction into said latched position; and beyond said unlatched position in said first angular direction into said disabled position.

5. A bolt latch mechanism as recited in claim 4, said firing pin being formed with a head having a peripheral surface cylindrical about the axis of movement of said firing pin; said cam means comprising a cam surface formed on said latch lever; said latch lever being constructed and pivotally mounted so that in said latched position thereof, said cam surface is inclined toward the axis of reciprocation of said firing pin in the direction of movement of said head from said cocked to said fired positions thereof, for sliding engagement by said head surface.

6. A bolt latch mechanism as recited in claim 5, said latch lever being constructed and pivotally mounted so that in said unlatched position thereof, said cam surface slidably engages said head surface and remains inclined to the axis of reciprocation of said firing pin in the direction of movement of said head from said cocked to said fired positions thereof, but at a smaller angle than in said latched position of said latch lever, thereby permitting further pivotal movement of said latch lever in said first angular direction into said disabled position without producing binding interference between said cam surface and said head surface.

7. A bolt latch mechanism as recited in claim 1, said latch lever projecting from said bolt plug recess outwardly of said bolt plug, and having a V-shaped upper surface for manual rocking between said disabled position and said latched and unlatched positions.

* * * * *

CONFIDENTIAL-SUBJECT TO PROTECTIVE ORDER
KINZER V. REMINGTON

BOLT LATCH FOR BOLT-ACTION FIREARMS

This invention relates to firearms of the bolt-action type, which have a bolt reciprocable in a receiver between open and closed positions, and rotatable by means of a handle between locked and unlocked relationship to the firearm barrel. The invention is particularly concerned with an improved bolt latch mechanism which is normally operated automatically by the firing and re-cocking of the firearm, but which ~~may be~~ selectively disabled, according to the user's wishes.

In a bolt-action firearm intended for hunting use, it ~~is desirable~~ to provide both a safety, and a bolt latch for securing the bolt locked in a closed position. These two features allow the firearm to be carried in the field loaded and cocked, without risk either of accidental firing, or of the bolt being unlocked by some accidental jar or collision. At the same time, the user should be enabled to open the bolt readily and safely for unloading. Controls for the safety and bolt latch should ~~be simple~~ enough to avoid confusion in poor lighting conditions; should be readily manipulable even by a hunter wearing gloves; and yet should not protrude in a manner either to interfere with manual operation ~~of the~~ firearm, or to be susceptible to inadvertent displacement.

One approach to this question is ~~shown in~~ U. S. Patent 2,514,981 to Walker et al, in which a two-position safety lever also serves as a bolt ~~latch.~~ The safety lever has two arms: a safety arm bearing an eccentric which blocks the sear of the trigger mechanism in a "safe" position of the lever; and another latch arm which engages a notch in the bolt to latch it against rotation. Movement of the safety lever to the "fire" position releases the sear, and also removes

RA-0247

CONFIDENTIAL-SUBJECT TO PROTECTIVE ORDER
KINZER V. REMINGTON

R2539570

the latch arm from engagement with the bolt. This is a satisfactory system; but it does require the safety to be released when the bolt is opened, and therefore calls for proper caution to be exercised when the user wishes to unload the firearm.

Another prior art solution involves a safety lever movable to three positions: one in which the safety and the bolt latch are both engaged; a second, intermediate position which either disengages the bolt latch, or enables it to be manually disengaged, but leaves the safety on; and a third, firing position in which both the safety and the bolt latch are inoperative. Examples of this approach appear in U. S. Patents 2,824,402 to Fischer; 1,318,423 to Williams; 2,869,269 to Couture; and 3,138,888 to Brewer. If a hunter is working in good lighting conditions, without gloves, and with leisure to see that the safety is correctly positioned, these systems are satisfactory. But in the press of urgency and excitement that often arises in the field, and under adverse conditions, error in selecting among three safety positions is not unlikely to occur.

Another solution that has been suggested is to provide a bolt latch that is completely divorced from the safety mechanism. This enables the hunter to unload without concern about changing the condition of a safety he has previously activated. Two examples of such a bolt latch are found in U. S. Patents 1,332,514 to Bader, and 1,669,496 to Stahl. In Bader, a sliding latch, mounted on the side of the bolt plug just behind the bolt handle, is movable to or from latching engagement with the bolt handle by means of a pivoted lever, which is spring-biased toward the latch-engaging position. The latch may be withdrawn either by lever engagement with a shoulder on the firing pin when the

CONFIDENTIAL-SUBJECT TO PROTECTIVE ORDER
KINZER V. REMINGTON

rifle is fired, or by manual rotation of the pivoted lever. After manual opening with the rifle cocked, the pivoted lever must be held manually retracted in order to re-close the bolt.

In the Stahl Patent, a rotatable shaft, formed with a flat and carrying a spring-biased latch plunger, extends tranversely across a mating flat in the firing pin. The cocking of the firing pin mates the two flats so as to turn the shaft and latch plunger into locking engagement with the bolt handle. Upon firing, the flats disengage so that the bolt handle may be raised, with the shaft and latch plunger now being free of the firing pin and able to rotate to permit this opening movement. If it is desired to unload the rifle with the firing pin cocked, the latch plunger may be retracted manually to permit the bolt to be opened. The latch plunger must once again be held retracted to permit the bolt to be re-closed; this disadvantage is shared by Bader and Stahl.

The present invention has as its general object the improvement of bolt latch mechanisms for bolt-action rifles which have independently-operable safety devices. The improved mechanism features a simplified construction, involving a single pivoted, spring-loaded latch lever, which is automatically operated by the displacements of a firing pin during cocking and firing. In one embodiment, a detent is provided so that the latch is selectively operable manually to releasably secure it in a disabled position. The latch may readily be disabled or reactivated by the press of even a gloved finger, after which the hands are free to carry out loading, cocking, firing, or unloading operations without further attention to the latch.

CONFIDENTIAL-SUBJECT TO PROTECTIVE ORDER
KINZER V. REMINGTON

R2539572

According to the invention, the bolt plug of a bolt-action firearm is recessed to receive a latch lever, which is pivotally mounted in the recess for rocking motion to either of two positions: latched by cocking the weapon and closing the bolt handle; or unlatched by firing the weapon. A spring and plunger bias the lever toward the latched position, in which a tooth formed at one end of the lever engages in a mating notch in the closed bolt handle. The latch lever has a cam surface so arranged, in the latched position, as to project into the path of motion of the head of the firing pin, which therefore pivots the lever to the unlatched position when the weapon is fired. Subsequent re-cocking and withdrawal of the firing pin head enables the spring-loaded plunger to return the lever automatically to the latched position.

In one embodiment, the latch lever may be manually rocked beyond the latched position to a disabled position, in which a detent notch formed in the lever engages and interferes with movement of the spring-loaded plunger. The plunger cannot then move the lever toward the latched position until the lever is manually pressed in a direction to release the detent and thus restore automatic operation.

FIG. 1 is a fragmentary view in side elevation of one embodiment of the improved bolt latch mechanism, shown in latched relation to the bolt assembly of an illustrative bolt-action firearm, which is shown cocked and ready to fire;

RA-0247

CONFIDENTIAL-SUBJECT TO PROTECTIVE ORDER
KINZER V. REMINGTON

R2539573

FIG. 2 is a fragmentary view in rear elevation of the assembly of FIG. 1;

FIG. 3 is a fragmentary view showing the latch in unlatched position, with the bolt handle raised to unlock the bolt, and the parts of the firearm in fired and uncocked condition;

FIG. 4 is a fragmentary cross-sectional view in side elevation, with the parts in the same latched and cocked condition as in FIG. 1;

FIG. 5 is a view similar to FIG. 4, but showing the firing pin in a fired position, and the latch mechanism in an unlatched position; and

FIG. 6 is a view similar to FIGS. 4 and 5, but showing the firing pin in a cocked position, and the latch mechanism detented in a disabled position.

The improved bolt latch mechanism is broadly applicable to bolt-action firearms of various designs, but is shown for purposes of illustration in a bolt-action rifle of substantially the same type as is shown in more detail in U. S. Patents 2,585,195 to Walker and 2,514,981 to Walker et al, which were assigned to the owner of the present application. The rifle includes a hollow cylindrical bolt 10 which is mounted for rotation and longitudinal reciprocation in a receiver (not shown), by means of a handle 12 brazed or otherwise secured to the bolt. The bolt, when closed against the breech of the rifle barrel, may be locked by means of conventional lugs formed on its forward end (not shown), which are engaged by rotating the handle down into the position shown in FIGS. 1 and 2, or unlocked by raising the handle to the position of FIG. 3. The bolt is shown in its

CONFIDENTIAL-SUBJECT TO PROTECTIVE ORDER
KINZER V. REMINGTON

R2539574

closed longitudinal position with respect to elements of a fire control mechanism which includes a sear 34 and a trigger 35. With the bolt turned to its unlocked position of FIG. 3, it may be pulled longitudinally to the left to open the action for loading and unloading cartridges, and for cocking a firing pin 24.

A bolt plug 16 has a threaded extension 18 which extends forwardly into threaded engagement with internal threads 14 formed in the bolt, thus drivingly connecting the bolt and bolt plug for joint longitudinal reciprocation, but permitting the bolt to rotate independently. The bolt plug is formed with recessed flats 19 for sliding engagement with mating surfaces formed on the receiver (not shown), to restrain the bolt plug from rotating with the bolt. The bolt plug also has a cylindrical recess 20 slidably receiving an enlarged head 26 of the firing pin 24, and a slot 22 through which a sear-engaging lug 28 and a cocking arm 30 of the firing pin extend in freely-slidable but non-rotatable relation.

In the relative positions of these elements shown in FIGS. 1 and 4, the firing pin 24 is cocked, with an oblique face 42 of the lug 28 bearing against a mating face 40 of the sear 34. The firing pin is continuously urged toward a firing position, that is, toward the right in the drawings, by a conventional firing pin spring contained within the bolt. The sear, pivoted on a pin 36, is held in its illustrated angular position by the engagement between a step 39 in the sear and a connector 37 attached to the trigger 35, thereby restraining the firing pin in its cocked position. To fire the weapon, the trigger is pulled to move the connector 37 to the position shown in FIG. 3. The angle of the faces 40 and 42 with respect to the longitudinal axis of the bolt and firing pin is

CONFIDENTIAL-SUBJECT TO PROTECTIVE ORDER
KINZER V. REMINGTON

R2539575

such that the firing pin spring exerts a downward component of force on the sear that overcomes the upward force exerted by a sear spring 33, and pivots the sear counterclockwise to the position shown in FIG. 3, permitting the firing pin to be driven forwardly to its fired position shown in FIG. 5.

In the fired condition, the cocking arm 30 of the firing pin extends forwardly into the deepest part of a cocking cam 32 cut into the bolt 10, which is circumferentially aligned with the cocking arm when the bolt is closed (compare FIGS. 1 and 3). After firing, raising the bolt handle to the position of FIG. 3 causes the cocking arm to ride along the curved surface of the cam 32, and retracts the firing pin back toward the cocked position. Then as the bolt is opened and re-closed by a reciprocating movement along its major axis, the lug face 42 engages against the re-elevated sear face 40 and retains the firing pin in the cocked condition of FIGS. 1 and 4 once more.

The firearm action thus far described is conventional in design, and is further illustrated and described in the aforementioned Patents 2,585,195 and 2,514,981. Therefore, no further detailed description of its operation and design is believed necessary. A safety mechanism of any type suitable to such an action may be utilized as desired, and the bolt latch of the present invention is intended to operate entirely independently of the safety mechanism. As illustrated, the sear 34 is provided with a cam lobe 38 for cooperation with a safety lever having an eccentric, of the kind disclosed in Patent 2,514,981, which is selectively operable to block the sear against movement from the cocked position of FIG. 1. This is intended merely as an illustrative example of various safety mechanisms that might be used in conjunction with the improved bolt

CONFIDENTIAL-SUBJECT TO PROTECTIVE ORDER
KINZER V. REMINGTON

R2539576

latch, which will now be described.

The bolt plug 16 is formed with a radially-extending recess 50, in which a latch lever 51 is pivotally supported on a pin 60 received in a tranverse hole 58. The lever 51 has a tooth 52 at its forward end, which, in a latched position of FIGS. 1 and 4, engages in a locking notch 62 at the rear of the bolt 10 and handle 12 to prevent the bolt from being moved from its closed and locked position. A plunger 68 is slidably received in a blind hole 64 in the bolt plug, and is urged against a rear face 53 of the lever 51 by a spring 66 to bias the lever in a clockwise direction toward the latched position.

The latch lever 51 is formed with a planar cam surface 55 which projects into the recess 20 in the latched position of FIG. 4, into the path of movement of the outer cylindrical surface of the firing pin head 26 from its cocked position of FIG. 4 to its fired position of FIG. 5. In the latched position, the cam surface 55 extends in a direction inclined downwardly in a forward direction with respect to the longitudinal axis A of the firing pin motion. When the trigger 35 is pulled to release the firing pin, the forwardly-moving cylindrical head 26 engages the cam surface 55 and pivots the lever 51 to the unlatched position shown in FIG. 5, against the bias of the spring-loaded plunger 68. The bolt 10 is now free to turn, and may be unlocked and opened. The surface 55 continues to be inclined downwardly in a forward direction, for a reason which will appear, but at a greatly reduced angle to the bolt axis A.

Re-cocking of the firing pin 24 frees the cam surface 55 from the head 26. This allows the plunger 68 to automatically re-latch the lever 51 in the position

RA-0247

CONFIDENTIAL-SUBJECT TO PROTECTIVE ORDER
KINZER V. REMINGTON

R2539577

of FIG. 4, as the bolt handle is closed and the locking notch 62 becomes aligned with the tooth 52.

In the illustrated embodiment, the rear face 53 of the latch lever is formed with a detent notch 70, which is not reached by the plunger 68 sliding along the face 53 during the pivotal movements of the lever between the latched position of FIG. 4 and the unlatched position of FIG. 5. However, the lever may be rocked, by applying finger pressure to a projecting V-shaped upper surface 54, counterclockwise into a further disabled position shown in FIG. 6, in which the plunger 68 seats in the notch 70. The engagement between the plunger and the notch restrains the lever against being rotated by the bias of the spring 66, and thus detents the lever in this disabled position.

To provide for an ample arcuate displacement between the unlatched and disabled positions of the lever 51, the surface 55 must have some clearance from the head 26. Thus this surface is inclined downwardly at a small angle to the axis A in both the unlatched and the disabled positions, but in opposite axial directions.

When placed in the disabled, detented position of FIG. 6, the latch lever 51 will remain inoperative and unaffected by movement of the firing pin, until such time as finger pressure is applied to it in a clockwise direction to release the plunger 68 from the notch 70, and thus restore the parts to the normal automatically-operating positions of FIGS. 4 and 5.

CONFIDENTIAL-SUBJECT TO PROTECTIVE ORDER
KINZER V. REMINGTON

R2539578

In a hunting situation in the field, where a series of shots may be fired, the bolt is cyclically opened to reload the rifle, and reclosed to cock the firing pin for the next shot; and the latch lever automatically cycles between the latched and unlatched positions of FIGS. 4 and 5. Assuming, however, that the hunter wishes to unload the cocked and latched rifle without firing previously-loaded live rounds, he need not release the safety to do so. He merely presses the latch lever 51 into the disabled position of FIG. 6, and opens the bolt with the safety engaged. When he next wishes to reload the rifle, the latch lever should be pressed to release it from the detented disabled condition, so that its normal automatic operation is restored.

The latch lever 51 is preferably positioned near the top of the bolt plug as shown, so that it is readily visible and easily pressed even with a gloved hand, but does not protrude in such a location as to be readily subject to accidental operation by the user's hand carrying the rifle, or by jarring against other objects.

In an alternative embodiment which is not illustrated, the detent notch 70 is not formed in the latch lever 51, and the rear face 53 is left uninterrupted. The cycle of operation would then include only movements between the latched and unlatched positions of FIGS. 4 and 5. If the hunter wishes to unload live rounds from the rifle when it is in a cocked condition, without releasing the safety, he presses the latch lever into the unlatched position of FIG. 5, and opens the bolt. The disadvantage of omitting the detent notch 70 is that he must use a finger of one hand, which also supports the rifle, to retain the lever 51 in the FIG. 5 position during his action of

CONFIDENTIAL-SUBJECT TO PROTECTIVE ORDER
KINZER V. REMINGTON

R2539579

initially opening the bolt by grasping and turning the bolt handle with the other hand. An offsetting advantage of omitting the detent notch is that he need not later reactivate the lever 51 by releasing it from a disabled condition as shown in FIG. 6. When the bolt has been initially turned from the closed toward the open position, the user's finger may be released from the lever 51, and the tooth 52 will slide against the outer periphery of the rotating bolt. Reclosing of the bolt can then be carried out without having to press the lever 51 again, since the tooth 52 will slide back along the outer bolt surface until it falls into the locking notch 62, and assumes the latched position of FIG. 4.

WIGEL

RA-0247

CONFIDENTIAL-SUBJECT TO PROTECTIVE ORDER
KINZER V. REMINGTON

R2539580

CLAIM 1. In a bolt-action firearm of the type having a substantially cylindrical bolt rotatably mounted for movement between open and closed positions; a bolt plug non-rotatably mounted and having threaded connection with said bolt; a firing pin mounted reciprocably in said bolt plug for movement between fired and cocked positions with respect to said bolt; the improved bolt latch mechanism which comprises:

a latch lever having a tooth; said bolt plug being formed with a recess receiving said latch lever; said bolt being formed with a locking notch opening onto an outer peripheral surface thereof at a location radially aligned with said tooth upon rotation of said bolt to said closed position; means mounting said latch lever in said recess for pivotal movement substantially radially of said cylindrical bolt between a latched position in which said tooth is engaged in said locking notch to latch said bolt against rotation with respect to said bolt plug, and an unlatched position in which said tooth is disengaged from said locking notch to release said bolt for rotation; spring-biased plunger means mounted in said bolt plug for biasing said latch lever toward said latched position;

said latch lever having cam means arranged to project, upon pivotal movement of said latch lever into said latched position thereof, into the path of reciprocation of said firing pin, whereby movement of said firing pin to said fired position pivots said latch lever to said unlatched position, and movement of said firing pin to said cocked position permits said spring-biased plunger means to pivot said latch lever toward said latched position.

CLAIM 2. A bolt latch mechanism as recited in CLAIM 1, said latch lever having a detent notch, and being

CONFIDENTIAL-SUBJECT TO PROTECTIVE ORDER
KINZER V. REMINGTON

R2539581

manually pivotable in said recess to a disabled position in which said tooth is released from said locking notch and said detent notch engages said plunger means to interfere with rotation of said latch lever and thereby render said plunger means inoperative to pivot said latch lever toward said latched position thereof.

CLAIM 3. A bolt latch mechanism as recited in CLAIM 2, said latch lever being manually pivotable from said disabled position toward said latched and unlatched positions thereof, by applying pressure sufficient to displace said plunger means from said detent notch.

CLAIM 4. A bolt latch mechanism as recited in CLAIM 2, said latch lever having a face area normally bearing against said plunger means for relative sliding movement as said latch lever is pivoted between said latched and unlatched positions, said detent notch being formed in said face in a location spaced from said bearing area to engage said plunger means in said disabled position of said latch lever.

CLAIM 5. A bolt latch mechanism as recited in CLAIM 2, said latch lever being pivotable: in a first angular direction into said unlatched position; in an opposite angular direction into said latched position; and beyond said unlatched position in said first angular direction into said disabled position.

CLAIM 6. A bolt latch mechanism as recited in CLAIM 5, said firing pin being formed with a head having a peripheral surface cylindrical about the axis of movement of said firing pin; said cam means comprising a cam surface formed on said latch lever; said latch lever being constructed and pivotally mounted so that in said latched position thereof, said cam surface is

CONFIDENTIAL-SUBJECT TO PROTECTIVE ORDER
KINZER V. REMINGTON

R2539582

inclined toward the axis of reciprocation of said firing pin in the direction of movement of said head from said cocked to said fired positions thereof, for sliding engagement by said head surface.

CLAIM 7. A bolt latch mechanism as recited in CLAIM 6, said latch lever being constructed and pivotally mounted so that in said unlatched position thereof, said cam surface slidably engages said head surface and remains inclined to the axis of reciprocation of said firing pin in the direction of movement of said head from said cocked to said fired positions thereof, but at a smaller angle than in said latched position of said latch lever, thereby permitting further pivotal movement of said latch lever in said first angular direction into said disabled position without producing binding interference between said cam surface and said head surface.

CLAIM 8. A bolt latch mechanism as recited in CLAIM 2, said latch lever projecting from said bolt plug recess outwardly of said bolt plug, and having a V-shaped upper surface for manual rocking between said disabled position and said latched and unlatched positions.

RA-0247

CONFIDENTIAL-SUBJECT TO PROTECTIVE ORDER
KINZER V. REMINGTON

R2539583

CLAIM 9. In a bolt-action firearm of the type having a bolt rotatably mounted for movement between open and closed positions; a bolt plug non-rotatably mounted and having threaded connection with said bolt; a firing pin mounted reciprocably in said bolt plug for movement between fired and cocked positions with respect to said bolt; the improved latch mechanism which comprises:

A latch lever having a tooth; said bolt being formed with a notch arranged for receiving said tooth when said bolt is rotated to its closed position; said latch lever being pivotally mounted on said bolt plug for pivotal movement between a latched position in which said tooth is engaged in said notch to lock said bolt against rotation, and an unlatched position in which said tooth is disengaged from said notch to release said bolt; means for biasing said latch lever toward said latched position; said latch lever having cam means constructed and arranged to cooperate with said firing pin to pivot said latch lever from said latched to said unlatched position thereof in response to movement of said firing pin from said cocked to said fired position thereof; releasable detent means for said latch lever; said latch lever being further pivotally movable to a detented disabled position in which said detent means is operable to releasably secure said latch lever against movement by said biasing means.

CLAIM 10. A bolt latch mechanism as recited in CLAIM 9, said latch lever being selectively manually pivotable between said detented disabled position and said latched and unlatched positions by applying pressure in alternate angular directions to said latch lever.

RA-0247

CONFIDENTIAL-SUBJECT TO PROTECTIVE ORDER
KINZER V. REMINGTON

R2539584

ABSTRACT OF THE DISCLOSURE

A bolt-action firearm, of the type having a bolt rotatably movable between closed and open positions, has an improved bolt latch mechanism which is operable independently of a safety mechanism. The latch locks the bolt in closed position automatically when the firing pin is cocked, and releases the bolt upon firing. The latch mechanism is recessed in the bolt plug in such fashion that it is readily visible and accessible, yet does not interfere with normal ~~manual~~ operation of the firearm, and does not protrude so that it might readily be displaced accidentally. ~~In one~~ embodiment, the latch may be manually displaced to or from a disabled position, in which it is releasably detented.

RA-0247

CONFIDENTIAL-SUBJECT TO PROTECTIVE ORDER
KINZER V. REMINGTON

R2539585

FIG. 4.

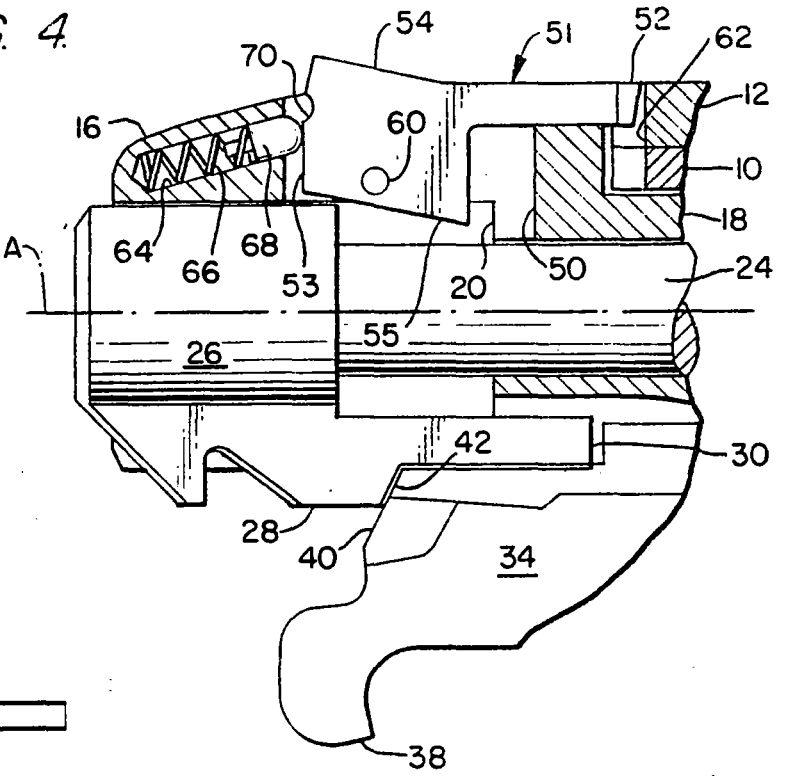

FIG. 5

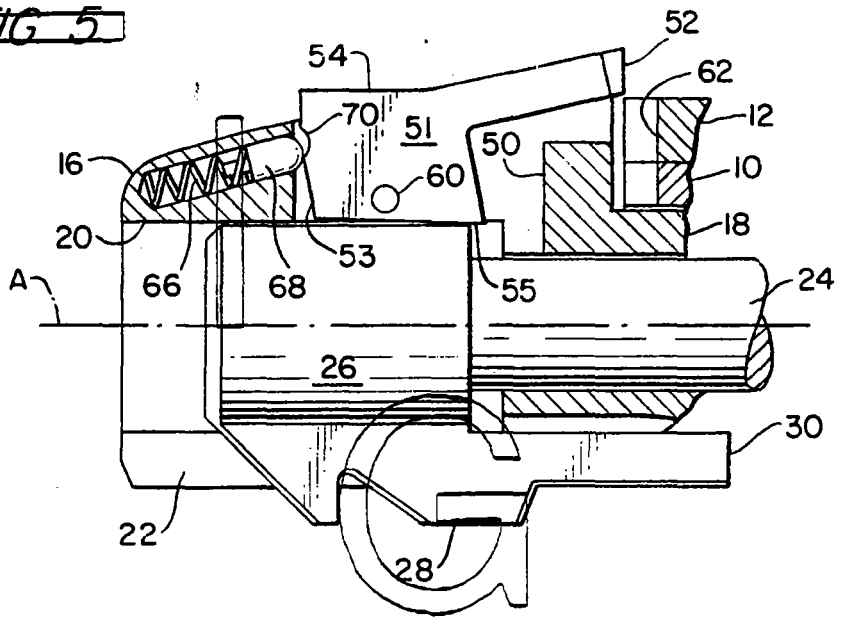

FIG. 6.

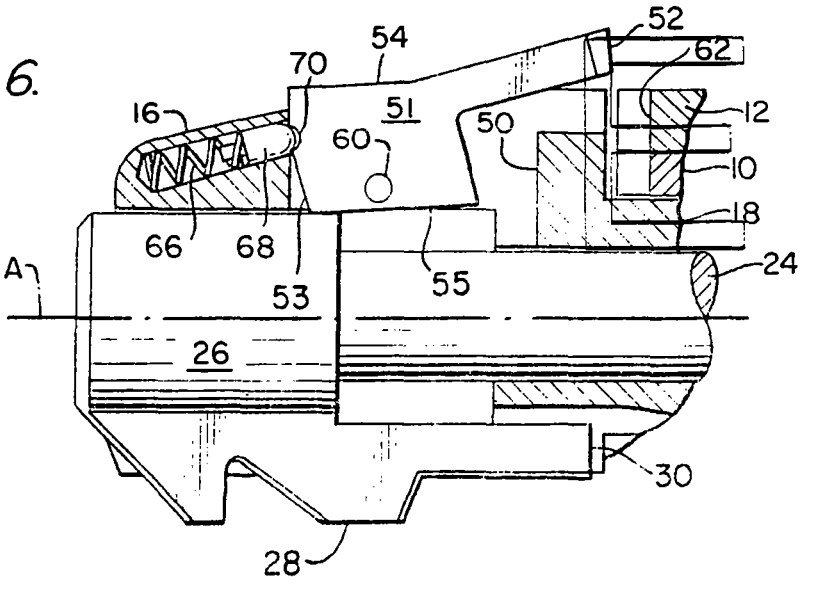

CONFIDENTIAL-SUBJECT TO PROTECTIVE ORDER
KINZER V. REMINGTON

FIG. 1.

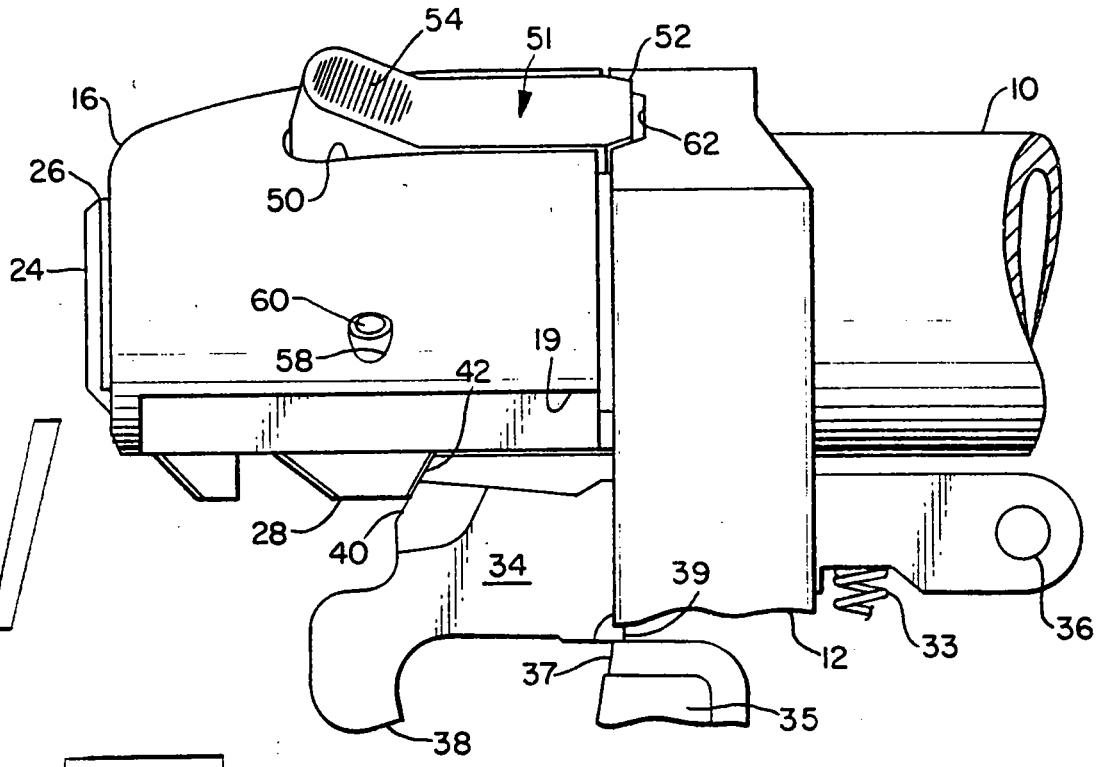

FIG. 2.

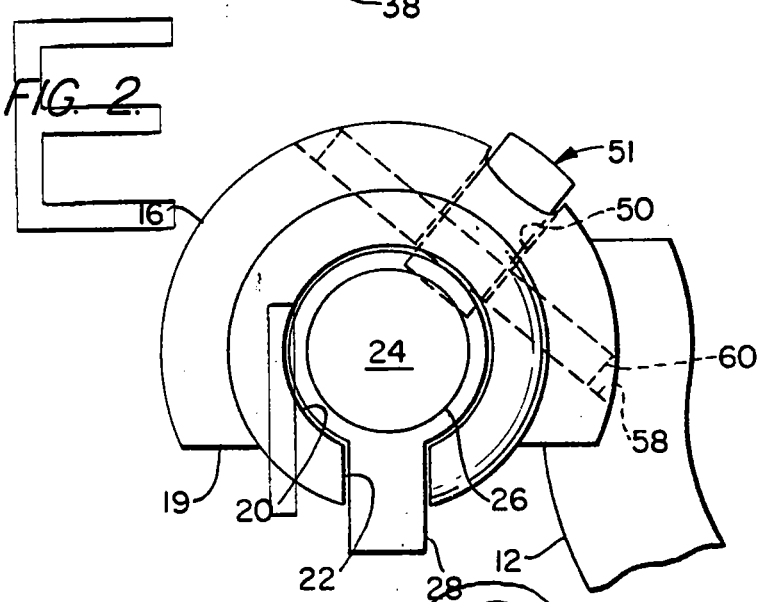

FIG. 3.

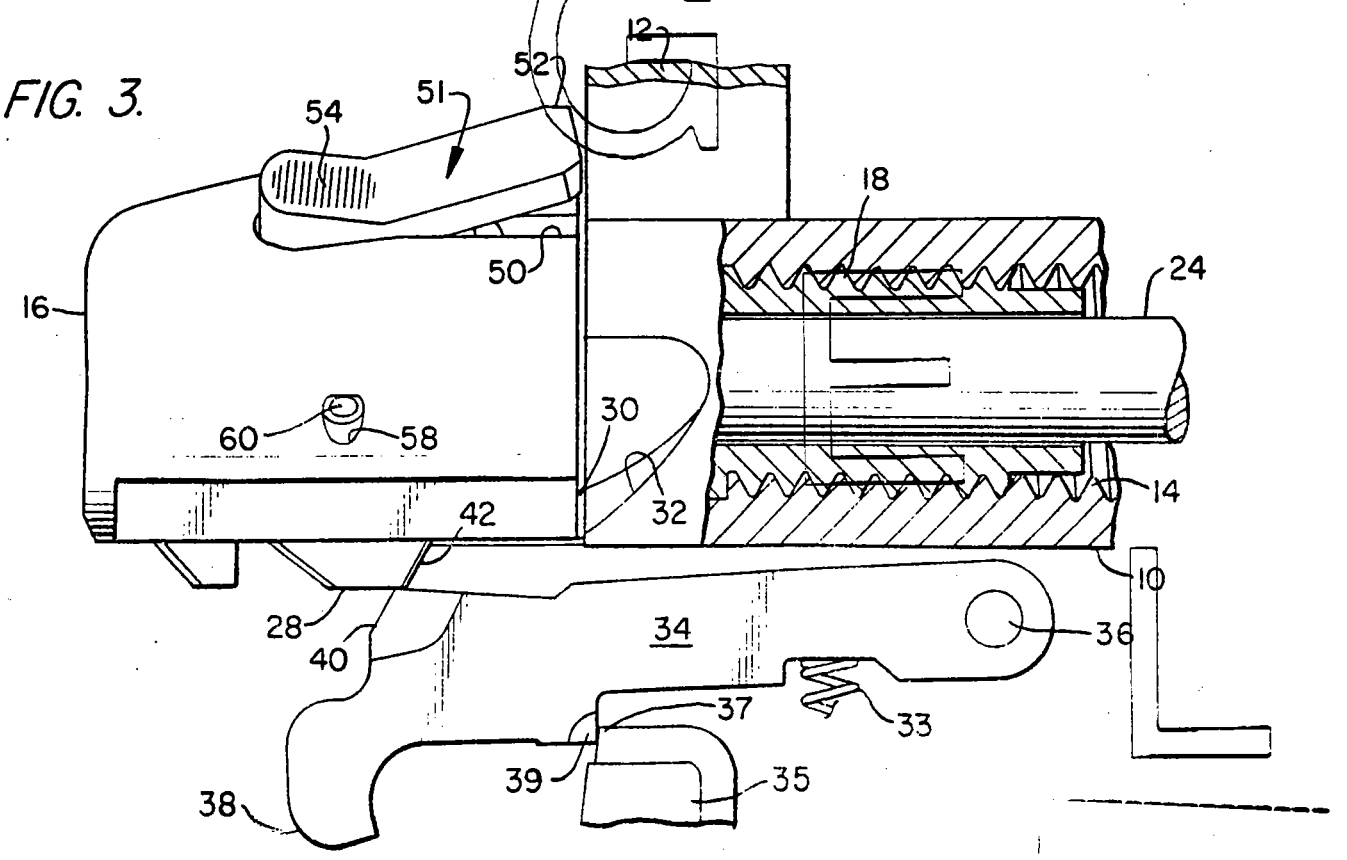

CONFIDENTIAL-SUBJECT TO PROTECTIVE ORDER
KINZER V. REMINGTON

RD-69 REV. 6-58

REMINGTON ARMS COMPANY, INC.

INTERDEPARTMENTAL CORRESPONDENCE

Remington

BRIDGEPORT, CONNECTICUT

APRIL 9, 1981

FRED MARTIN

SUBJECT: BOLT LATCH FOR BOLT-ACTION FIREARMS RA-0247

I am enclosing a draft patent application for your consideration. Your file copy has copies of the Stahl and Bader patents attached, which are discussed at pages 2 and 3 of the application.

There are several other patents mentioned at pages 1, 2, or 5, including two Walker patents owned by Remington, which relate to the Models 721, 700, etc., and four other patents to Fischer, Williams, Couture, and Brewer that relate to three-position safeties. These are not as pertinent to your invention as Stahl and Bader, and are mentioned only as general background; so I haven't attached copies, but will be glad to supply if you want to see them.

If you find that the application describes your bolt latch accurately and fully, please sign the Declaration attached to the "PTO Copy", sign the Assignment and have it notarized, and return these signed papers for filing in the Patent and Trademark Office.

However, if you want to make corrections or additions, please either give me a call, or correct your file copy in pencil and send all the papers back to me for revision.

Bill Ericson

WILLIAM L. ERICSON
SENIOR PATENT COUNSEL

WLE/dt
Encls.

RA-0247

CONFIDENTIAL-SUBJECT TO PROTECTIVE ORDER
KINZER V. REMINGTON

May 15, 1928. 1,669,496

E. R. STAHL

BOLT ACTION GUN

Filed Aug. 12, 1927 3 Sheets-Sheet 3

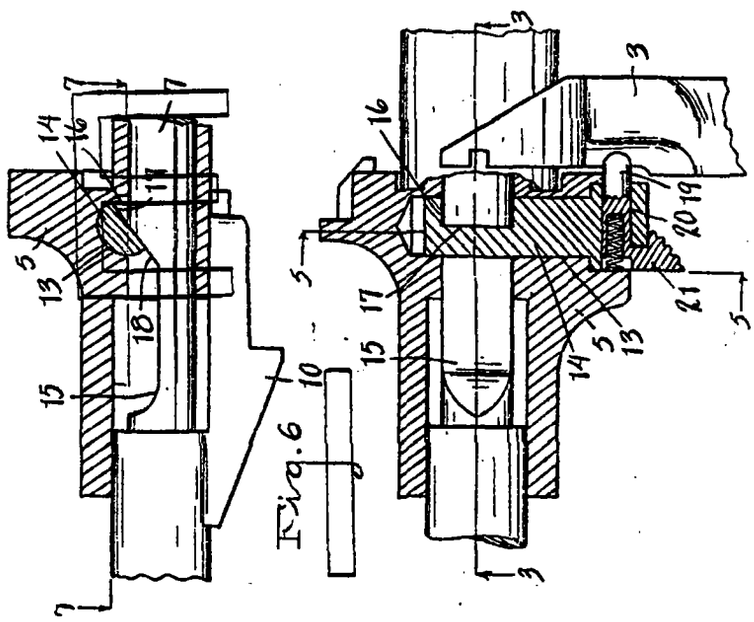

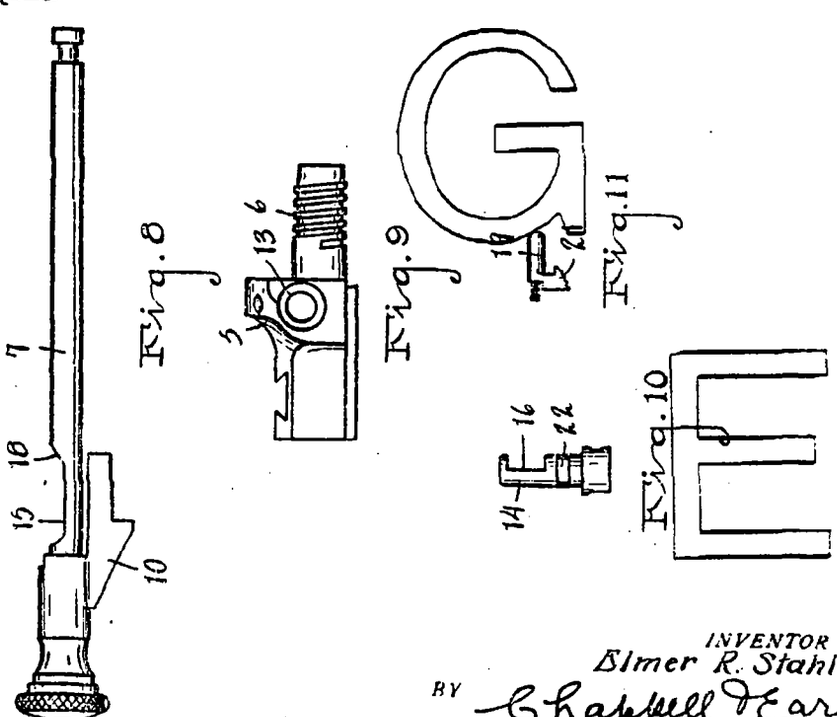

INVENTOR
Elmer R. Stahl
BY Chappell & Earl
ATTORNEYS

CONFIDENTIAL-SUBJECT TO PROTECTIVE ORDER
KINZER V. REMINGTON

R2539589

CLASS 42 SUB 70
PATENT DEPARTMENT
REMINGTON ARMS CO., Inc.

161

May 15, 1928.

1,669,496

E. R. STAHL

BOLT ACTION GUN

Filed Aug. 12, 1927

3 Sheets-Sheet 1

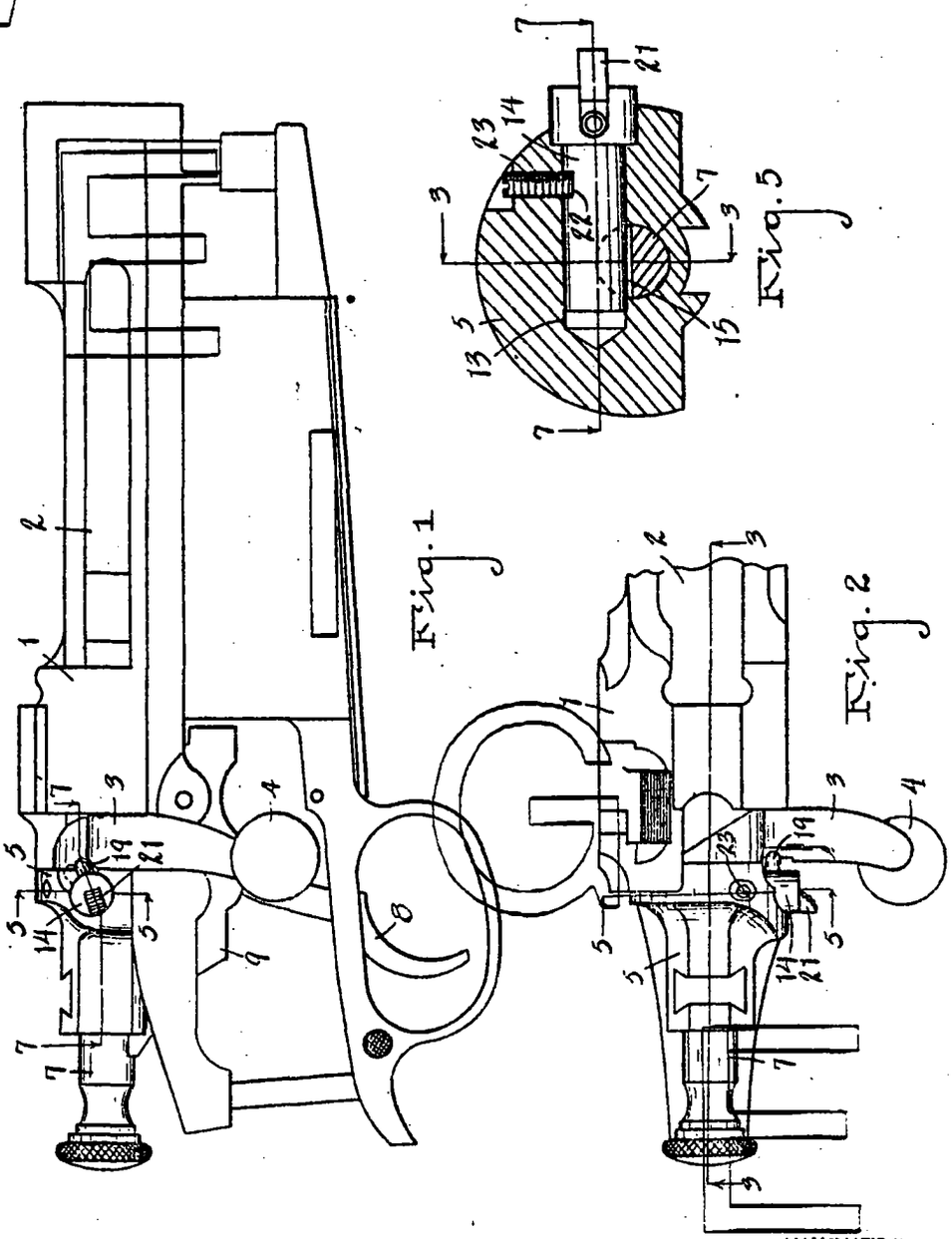

INVENTOR
Elmer R. Stahl
BY Chappell & Earl
ATTORNEYS

CONFIDENTIAL-SUBJECT TO PROTECTIVE ORDER
KINZER V. REMINGTON

R2539590

May 15, 1928. 1,669,496

E. R. STAHL

BOLT ACTION GUN

Filed Aug. 12, 1927 3 Sheets-Sheet 2

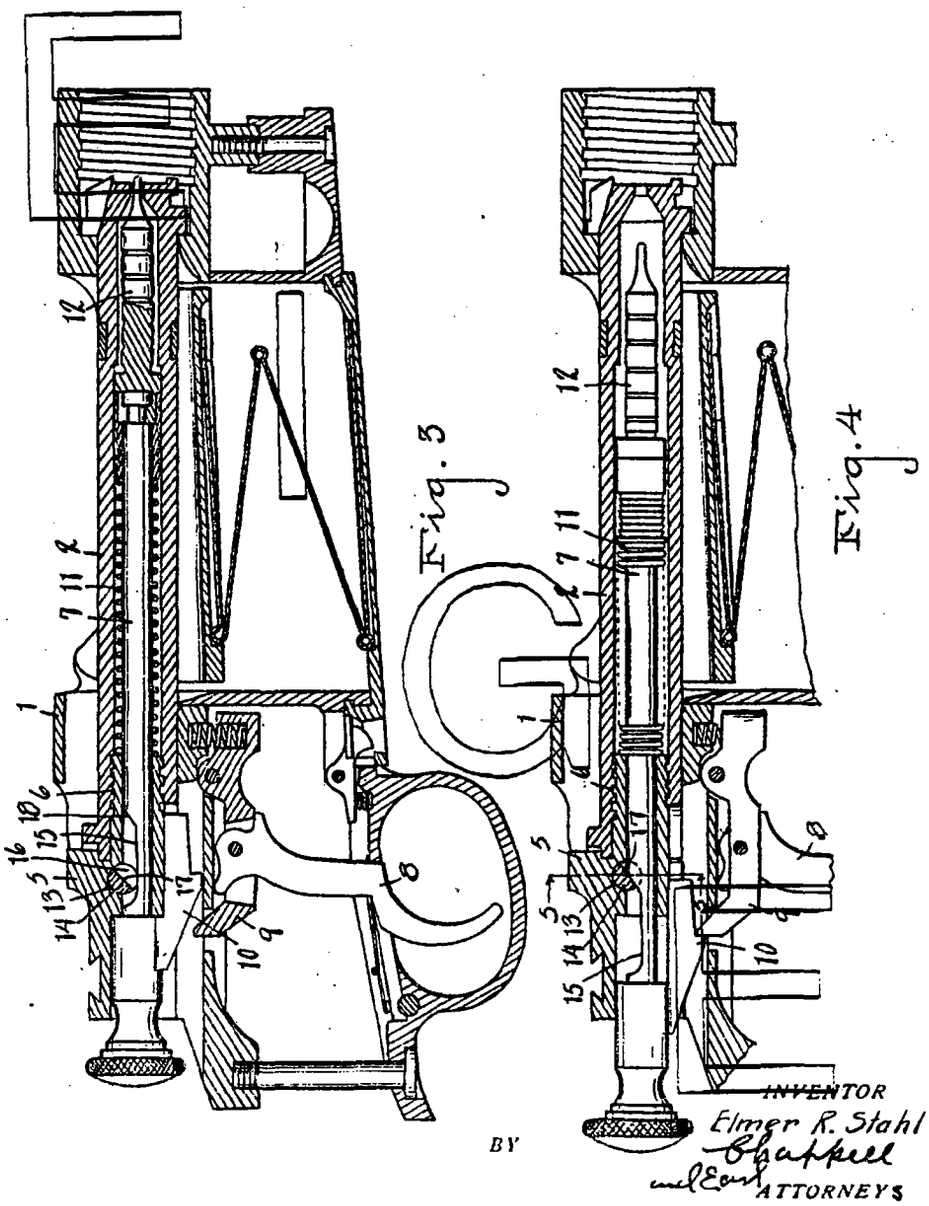

CONFIDENTIAL-SUBJECT TO PROTECTIVE ORDER
KINZER V. REMINGTON

Patented May 15, 1928. **1,669,496**

UNITED STATES PATENT OFFICE.

ELMER R. STAHL, OF DOWAGIAC, MICHIGAN.

BOLT-ACTION GUN.

Application filed August 12, 1927. Serial No. 212,492.

The main objects of this invention are:

First, to provide a bolt locking means for bolt action guns in which the flight of the firing pin is away from and unimpeded by the locking means.

Second, to provide a breech bolt locking means which is automatic in its operation.

Third, to provide an automatic breech bolt locking means which is capable of manual release.

Fourth, to provide a breech bolt locking means in which the parts are comparatively simple and are so formed and supported that they are not likely to be injured or rendered inoperative in use by severe or careless manipulation of the gun.

Objects relating to details and economies of construction and operation of my invention will definitely appear from the detailed description to follow.

The invention is defined and pointed out in the claims.

A structure which is a preferred embodiment of my invention is illustrated in the accompanying drawing, forming a part of this application, in which:

Fig. 1 is a side elevation of a gun action embodying the features of my invention, the stock and barrel and magazine being omitted.

Fig. 2 is a fragmentary plan view.

Fig. 3 is a longitudinal section on a line corresponding to line 3—3 of Figs. 2, 5 and 7, certain parts being shown in full lines for convenience in illustration, the firing pin being in firing position.

Fig. 4 is a fragmentary longitudinal section corresponding to Fig. 3 with the firing pin in retracted position.

Fig. 5 is a transverse section on line 5—5 of Figs. 1, 2, 4, and 7.

Fig. 6 is an enlarged detail partially in longitudinal section showing the firing pin in retracted or set position, with the breech bolt locking bolt in locking relation thereto.

Fig. 7 is a detail view partially in longitudinal section on line 7—7 of Figs. 1, 5 and 6.

Fig. 8 is a side elevation of the firing pin with its plunger removed.

Fig. 9 is a side elevation of the non-rotating portion of the breech bolt.

Fig. 10 is a plan view of the locking bolt.

Fig. 11 is a plan view of the locking bolt detent and its spring.

In the drawing similar reference characters refer to similar parts throughout the several views, and the sectional views are taken looking in the direction of the little arrows at the ends of the section lines.

Referring to the drawings, 1 represents the body or receiver portion of the breech bolt action. This is a standard commercial type and its structural details need not, therefore, be described.

The breech bolt 2 is mounted in the receiver for reciprocating and rotary movement as is common with gun actions of this type, the bolt being provided with a laterally projecting arm 3 having a hand piece 4 at its outer end.

The breech bolt sleeve 5 is non-rotatably supported for reciprocating movement with the barrel portion of the breech bolt, having threaded engagement therewith at 6.

The firing pin 7 is supported in the breech bolt and its sleeve for movement independently thereof. The trigger 8 is hung from the sear 9 which engages the keeper 10 of the firing pin when the firing pin is retracted or set, as shown in Fig. 4.

The firing pin is provided with an actuating spring 11 and a tappet or plunger 12.

The sleeve 5 is provided with a transverse bore 13 to receive and rotatably support the locking bolt 14, the firing pin having an elongated recess 15 to receive this bolt, the bore 13 in part intersecting the firing pin bore 15 in the sleeve 5.

The locking bolt has a segmental recess 16 which permits limited movement thereof and provides a flat face 17 coacting with the forwardly inclined shoulder 18 at the forward end of the recess 15 when the parts are in locking position, the firing pin in this position, as shown in Fig. 4, serving as a detent to support the locking bolt against rotation in releasing direction.

The locking bolt is provided with a detent 19 reciprocatingly mounted in a transverse bore 20 in the locking bolt, shown in Fig. 7, to coact with the arm 3 on the breech bolt. This detent is provided with a finger piece 21 which permits manual releasing of the detent should occasion require.

The locking bolt has a transverse kerf-like recess 22 engaged by the retaining screw 23 for holding the parts in assembled position.

With the parts thus arranged, when the

CONFIDENTIAL-SUBJECT TO PROTECTIVE ORDER
KINZER V. REMINGTON

R2539592

breech bolt is actuated to set the trigger, the shoulder 18 of the firing pin is brought into engagement with the locking bolt, serving as a detent to support it against rotation, the parts being then in position shown in Figs. 4, 6 and 7, the arm 3 being engaged by the detent 19 and thereby locked in its initial position so that the breech bolt cannot be accidentally removed in position to impede the flight of the firing pin.

It will be observed that while the firing pin constitutes an element of the locking means, its flight is away from the locking means so that its movement is not impeded by the locking means, its movement in fact being entirely free of independent from such locking means.

I have illustrated and described my improvements in an embodiment which is highly practical. I have not attempted to illustrate or describe other embodiments or adaptations as I believe this disclosure will enable those skilled in the art to embody or adapt my improvements as may be desired.

Having thus described my invention, what I claim as new and desire to secure by Letters Patent, is:

1. In a firearm, the combination of a receiver, a breech bolt mounted for reciprocating and rotary movement in said receiver and provided with a laterally projecting arm, a non-rotatable sleeve mounted to reciprocate with said bolt, a firing pin operatively associated with said breech bolt and sleeve, a locking bolt rotatably mounted in said sleeve transversely of said firing pin, said firing pin having a transverse recess to receive said locking bolt, the front end of said recess being forwardly inclined providing a locking shoulder, said locking bolt having a transverse recess to receive said firing pin, the face of said recess being engaged by the said locking shoulder of the firing pin when the firing pin is in set position, and a spring actuated reciprocating detent disposed transversely of said locking bolt to engage said breech bolt arm when it is in its initial position, said detent being provided with a finger piece permitting the releasing of said breech bolt.

2. In a firearm, the combination of a receiver, a breech bolt mounted for reciprocating and rotary movement in said receiver and provided with a laterally projecting arm, a non-rotatable sleeve mounted to reciprocate with said bolt, a firing pin operatively associated with said breech bolt and sleeve, a locking bolt rotatably mounted in said sleeve transversely of said firing pin, said firing pin having a transverse recess to receive said locking bolt, said locking bolt having a transverse recess to receive said firing pin, and a spring actuated reciprocating detent disposed transversely of said locking bolt to engage said breech bolt arm when it is in its initial position, said detent being provided with a finger piece permitting the releasing of said breech bolt.

3. In a firearm, the combination of a receiver, a breech bolt mounted for reciprocating and rotary movement in said receiver, a non-rotatable sleeve mounted to reciprocate with said bolt, a firing pin operatively associated with said breech bolt and sleeve, and means for locking said breech bolt comprising a locking bolt rotatably mounted in said sleeve transversely of said firing pin, said firing pin having a transverse recess to receive said locking bolt, the front end of said recess providing a locking shoulder, said locking bolt having a transverse recess to receive said firing pin, the face of said recess being engaged by the locking bolt of the firing pin when the firing pin is in set position.

4. In a firearm, the combination of a receiver, a breech bolt mounted for reciprocating and rotary movement in said receiver and provided with a laterally projecting arm, a non-rotatable sleeve mounted to reciprocate with said bolt, a firing pin operatively associated with said breech bolt and sleeve, and a locking bolt rotatably mounted in said sleeve transversely of said firing pin to be engaged by the firing pin when the firing pin is in set position, said locking bolt having a spring actuated detent disposed to engage said breech bolt arm when it is in its initial position, said detent being manually releasable.

5. In a firearm, the combination of a receiver, a breech bolt mounted for reciprocating and rotary movement in said receiver, a non-rotatable sleeve mounted to reciprocate with said bolt, a firing pin operatively associated with said breech bolt and sleeve, and a locking member for said breech bolt rotatably mounted in said sleeve transversely of said firing pin to be engaged by the firing pin when the firing pin is in set position.

6. A firearm comprising a rotary and reciprocatory breech bolt, a non-rotating sleeve reciprocating with the bolt, a firing pin reciprocating with the sleeve and bolt and movable relative to said parts, and means for locking said bolt in firing position comprising a locking member mounted on said sleeve to cooperate with said bolt, said firing pin cooperating with said locking member to hold the same in bolt locking position when the firing pin is in set position, the flight of the pin being away from said locking means whereby its movement is unimpeded by the locking means.

7. In a firearm, the combination of a receiver, a breech bolt mounted for reciprocating and rotary movement in said receiver, a non-rotatable sleeve mounted to reciprocate with said bolt, a firing pin operatively associated with said breech bolt and sleeve,

CONFIDENTIAL-SUBJECT TO PROTECTIVE ORDER
KINZER V. REMINGTON

R2539593

and a locking member for said breech bolt mounted in said sleeve to be engaged by the firing pin when the firing pin is in set position.

8. A firearm comprising a rotary and reciprocatory breech bolt, a non-rotating sleeve reciprocating with the bolt, a firing pin operatively associated with said bolt and sleeve and movable relative thereto, and means for locking said breech bolt in firing position comprising a locking member mounted on said sleeve to cooperate with said breech bolt, said firing pin cooperating, when in set position, with said locking member to hold the same in breech bolt locking position, the flight of the firing pin being away from said locking member whereby its movement is unimpeded by the locking means.

9. A firearm comprising a rotary and reciprocatory breech bolt, a non-rotating sleeve reciprocating with the bolt, a firing pin operatively associated with said bolt and sleeve and movable relative thereto, and means for locking said breech bolt in firing position comprising a locking member mounted on said sleeve to cooperate with said breech bolt, said firing pin cooperating, when in set position, with said locking member to hold the same in breech bolt locking position.

10. A firearm comprising a rotary and reciprocatory breech bolt, a firing pin operatively associated therewith, and a breech bolt locking means cooperating with said firing pin when the firing pin is in set position to lock the breech bolt, the firing stroke of said firing pin being away from said locking means.

11. A firearm comprising a rotary and reciprocatory breech bolt, a firing pin operatively associated therewith, and a breech bolt locking means, said firing pin when in set position constituting a detent for the breech bolt locking means, the firing stroke of said firing pin being away from said locking means.

12. A firearm breech bolt action comprising a breech bolt mounted for reciprocatory and rotary movement, a firing pin operatively associated with said breech bolt, and a breech bolt locking means operatively associated with said breech bolt and firing pin, the firing pin acting when set to hold said locking means in locked position, the flight of the firing pin being away from and unimpeded by said locking means.

13. A firearm breech bolt action comprising a breech bolt mounted for reciprocatory and rotary movement, a firing pin operatively associated with said breech bolt, and a breech bolt locking means operatively associated with said breech bolt and firing pin, the firing pin acting when set to hold said locking means in locked position.

14. A breech bolt firearm action consisting of a breech bolt, automatic means for locking said breech bolt in initial position after actuation to set the firing pin, and a firing pin constituting a detent for said locking means, the flight of the firing pin being free and unimpeded by said locking means.

15. A breech bolt firearm action consisting of a breech bolt, automatic means for locking said breech bolt in initial position after actuation to set the firing pin, and a firing pin constituting a detent for said locking means.

16. A firearm breech bolt action comprising a breech bolt mounted for reciprocatory and rotary movement, a firing pin operatively associated with said breech bolt, and a breech bolt locking means operatively associated with said breech bolt and firing pin, the firing pin constituting a detent for said locking means, the flight of the firing pin being free and unimpeded by said locking means.

17. A firearm breech bolt action comprising a breech bolt mounted for reciprocatory and rotary movement, a firing pin operatively associated with said breech bolt, and a breech bolt locking means operatively associated with said breech bolt and firing pin, the firing pin constituting a detent for said locking means.

In witness whereof I have hereunto set my hand.

ELMER R. STAHL.

CONFIDENTIAL-SUBJECT TO PROTECTIVE ORDER
KINZER V. REMINGTON

R2539594

CLASS 42 SUBCLASS 70

142

The Remington Arms U.M.C. Co

W

G. A. BADER.

GUN.

APPLICATION FILED MAY 23, 1919.

1,322,514.

Patented Nov. 25, 1919.

2 SHEETS—SHEET 1.

Fig. 1

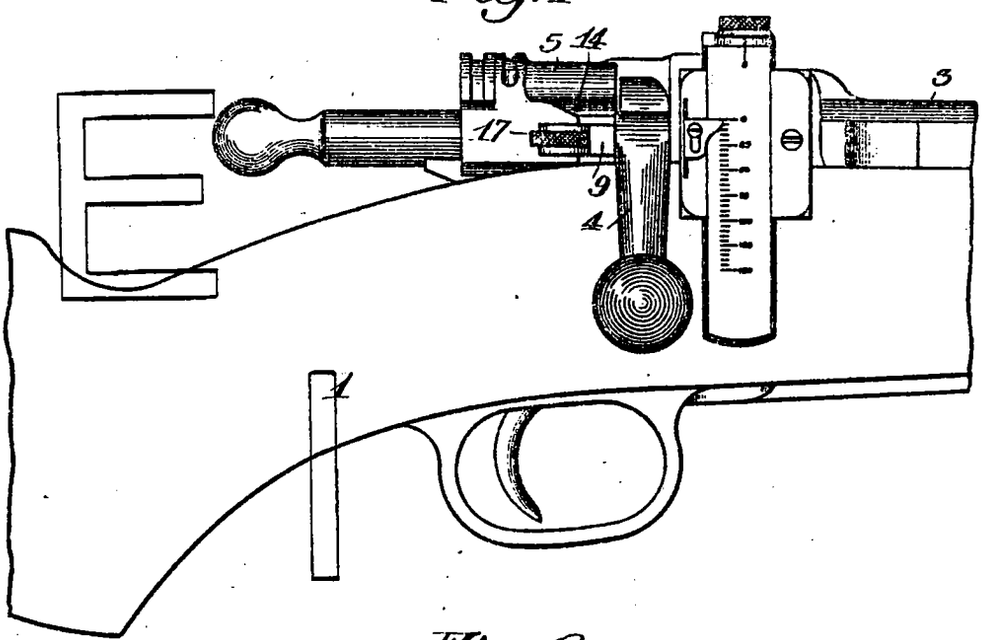

Fig. 2

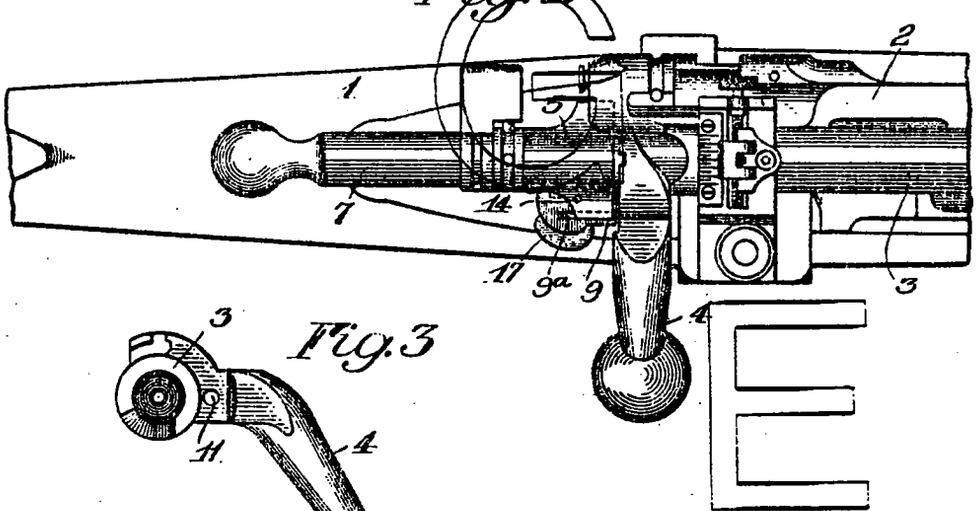

Fig. 3

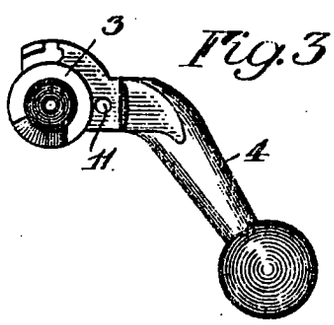

INVENTOR
Gustav A. Bader
BY
David Thomas
ATTORNEY

CONFIDENTIAL-SUBJECT TO PROTECTIVE ORDER
KINZER V. REMINGTON

R2539595

G. A. BADER.

GUN.

APPLICATION FILED MAY 23, 1919.

1,322,514. Patented Nov. 25, 1919.

2 SHEETS—SHEET 2.

Fig. 4

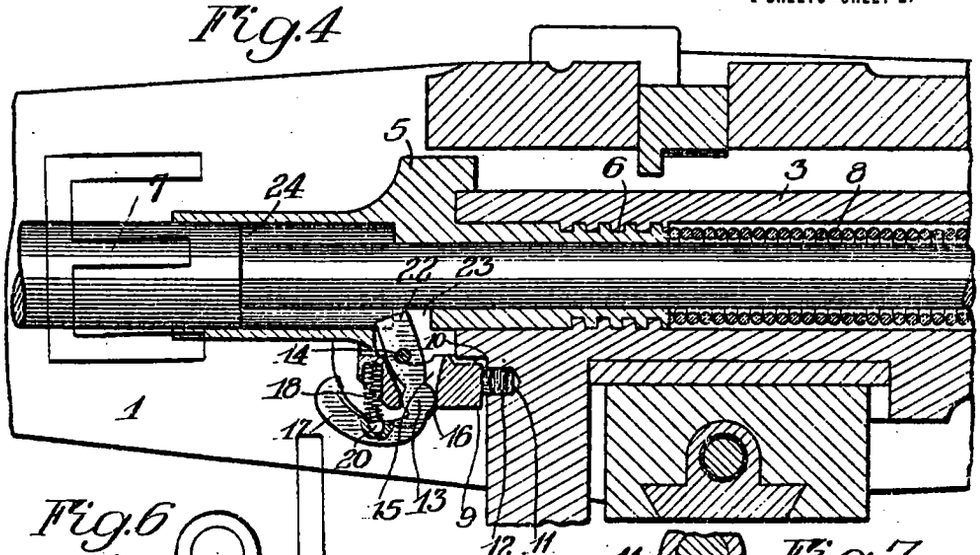

Fig. 6

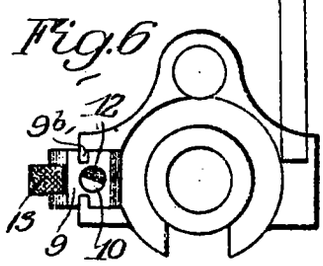

Fig. 7

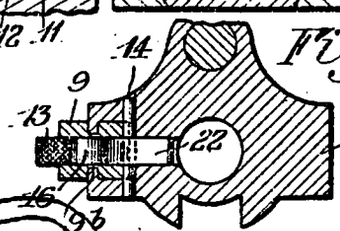

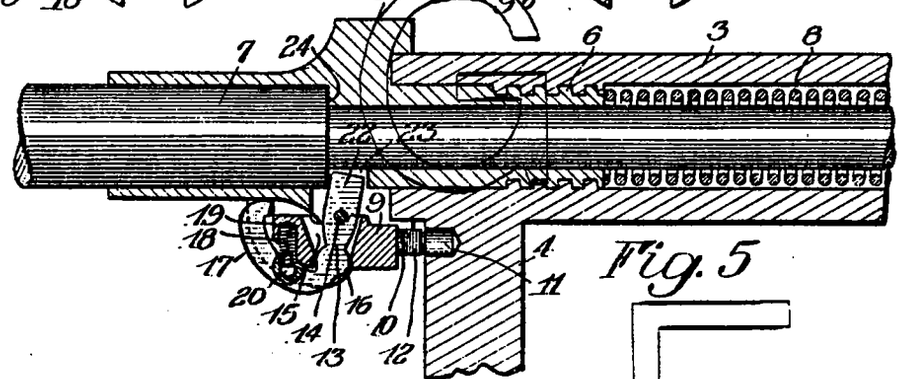

Fig. 5

Fig. 8

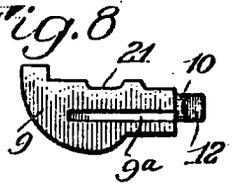

INVENTOR

Gustav A. Bader

BY

Davis & Simms

ATTORNEY

CONFIDENTIAL-SUBJECT TO PROTECTIVE ORDER
KINZER V. REMINGTON

R2539596

UNITED STATES PATENT OFFICE.

GUSTAV A. BADER, OF ROCHESTER, NEW YORK.

GUN.

1,322,514. Specification of Letters Patent. Patented Nov. 25, 1919.

Application filed May 23, 1919. Serial No. 299,103.

To all whom it may concern:

Be it known that I, GUSTAV A. BADER, a citizen of the United States, and resident of Rochester, in the county of Monroe and State of New York, have invented certain new and useful Improvements in Guns, of which the following is a specification.

The present invention relates more particularly to the type of guns in which a reciprocatory bolt mechanism carries a spring pressed firing pin and is provided with a portion which rotates to lock the bolt mechanism in firing position, an object of this invention being to lock the rotary part of the bolt mechanism against movement while in firing position and preferably to control such locking means automatically through the firing of the gun.

To this and other ends, the invention consists of certain parts and combinations of parts all of which will be hereinafter described, the novel features being pointed out in the appended claims.

In the drawings:

Figure 1 is a fragmentary side view of a gun equipped with the present invention;

Fig. 2 is a fragmentary top view of said gun;

Fig. 3 is a rear view of the breech bolt;

Fig. 4 is a horizontal sectional view through a portion of the gun in the plane of the axis of the firing pin showing the locking device locking the breech bolt in closed position;

Fig. 5 is a detail sectional view of the firing pin engaging the locking device and holding said locking device out of connection with the breech bolt;

Fig. 6 is a detail view of the sleeve which connects with the rear end of the breech bolt;

Fig. 7 is a vertical transverse section through said sleeve showing the manner in which the locking device is mounted on the sleeve; and

Fig. 8 is a detail view of one member of the locking device.

The invention herein is illustrated in the U. S. magazine rifle, model of 1903, which is described in publication #1923 of the Ordnance Department U. S. A., revised February 14, 1908, entitled "*Description and Rules for the Management of the U. S. Magazine Rifle, Model of 1903, Caliber .30.*" and reference may be had to this publication for any parts of the rifle which are not herein shown as it is unnecessary to illustrate in detail such a rifle in view of the fact that the invention is confined to an addition to the same. It will be understood however, that the invention is not limited to a rifle such as shown in the above mentioned publication but may be embodied in any construction where similar results are desired.

In rifles of the type mentioned, unless the bolt handle is turned fully down, the cam on the cocking piece will strike the cocking cam on the bolt and the energy of the main spring will be expended in closing the bolt, instead of on the primer; this prevents the possibility of a cartridge being fired until the bolt is fully closed, (see page 30 of the publication above referred to). In most instances, the bolt handle is turned fully down but is afterward unintentionally and unknowingly shifted slightly in an upward direction so that when the trigger is pulled the firing does not take place. It will be readily understood that this is not only a disadvantage to an army in battle but it is also a disadvantage to a hunter who, after roaming many hours, and may be days, meets game only to lose it through misfire due to the upward shifting of the bolt handle of which he had no knowledge. According to this invention the turning of the rotary part of the bolt mechanism is prevented by a locking device which automatically enters into locking position to lock the rotary portion of the bolt mechanism, this locking device being automatically shifted out of locking position when the gun is fired.

Referring to the embodiment of the invention herein shown, 1 indicates the stock of the gun and 2 the receiver on which the bolt mechanism is reciprocable. This mechanism comprises in this instance a breech block 3 reciprocable and rotatable in the well of the receiver and interlocking with the receiver by a rotary movement under the action of the handle 4, a sleeve 5 being guided on the receiver to be held against turning with the bolt and having a screw threaded connection 6 with the bolt. Carried by the sleeve and the breech bolt is a firing pin 7 which is acted upon by a main spring 8 of helical formation surrounding the firing pin. The foregoing parts are the known parts of the U. S. magazine rifle above mentioned.

CONFIDENTIAL-SUBJECT TO PROTECTIVE ORDER
KINZER V. REMINGTON

R2539597

As before pointed out, the handle 4 on the breech bolt 3 is shifted accidentally at times away from its lowered position where it locks the breech bolt to the receiver, thus causing the energy of the main spring of the firing pin to be used up in closing the bolt instead of acting on the primer with full force. According to the illustrated embodiment of this invention, means is provided for locking the breech bolt in its innermost position interlocked with the receiver. This means in this instance comprises a detent 9 ~~preferably~~ slidably mounted on the sleeve 5 ~~at one side~~ of the latter by forming grooves 9ᵃ in the upper and lower surfaces of the detent and projecting ribs 9ᵇ on the sleeve to fit into said grooves 9ᵃ. This detent may have a nose 10 adapted to enter a recess or notch 11 formed in the rear face of the ~~bolt arm 4,~~ the uppermost face of the nose ~~10 being bev~~eled at 12 so that when the bolt arm 4 is swung to its lowermost position, it will coöperate with the cam face 12 and move the latter rearwardly, after which the detent 9 will move under the action of a spring to be described, so that the nose 10 enters into the notch 11 and locks the bolt arm 4 in its lowermost position so that the bolt is held interlocked with the receiver.

The detent 9 may be controlled either manually or automatically, the latter being accomplished preferably through the firing pin 7. To these ends, a lever 13 may be pivotally mounted at 14 in the sleeve 5 and extend through an opening 15 in the detent 9, the lever having on opposite sides curved faces 16 acting as curved bearings for engaging opposite walls of the opening 15. On the outer side of the detent, the lever 13 may have a curved arm 17 and between this arm 17 and the detent, a helical spring 18 may be arranged, said spring being received within a pocket 19 in the detent 9 and a rocking projection 20 on the inner face of the arm 17. It will be apparent that this spring 18 acts on the operating lever 13 to shift the latter in a direction to move the detent 9 toward the arm 4 of the breech bolt 3. The pivot pin 14 may act as a stop for limiting the movement of the detent 9 and to this end the inner face of the detent is provided above and below the lever 13 with notches 21 in which the pivot pin 14 is received, the ends of these notches serving to limit the movement of the detent 9 on the guides of the sleeve 5. It will thus be apparent that the pin 14 not only holds the lever 13 to the sleeve 5 but also retains the detent on the sleeve 5 and therefore the removal of this pin 14 permits the removal of the two parts as well as the spring arranged between such parts.

The control of the detent 9 through the firing pin is preferably effected by providing an extension 22 on the lever 13 which projects through an opening 23 in the sleeve into the path of the usual shoulder 24 on the firing pin. When the firing pin is in its innermost position in the sleeve 5, this shoulder 24 engages the extension 22 of the lever 13 and moves the lever 13 in a direction to carry the detent out of interlocking connection with the arm 4 of the breech bolt, as will be seen more clearly by referring to Fig. 5 of the drawings, thus permitting the breech bolt to be rotated to become unlocked from the receiver in order that the bolt, the sleeve and the firing pin may be moved rearwardly after the firing pin is cocked. The shoulder 24 moves away from the extension 22 permitting the end 22 to shift rearwardly under the action of the spring 18 and in this way to project the detent 9 forwardly so that when the arm 4 of the breech bolt is moved downwardly, it will coöperate with the beveled end 12 of the detent shifting the latter to the rear so that the nose 10 may enter into the notch 11, thus locking the arm 4 of the breech bolt in the lower position. In this position of the detent it may be moved rearwardly manually by pressing on the extension 17 of the lever 13 or it may be moved rearwardly automatically by shifting the firing pin to its innermost position in the sleeve 5, when the shoulder 24 will engage the lever extension 22 and through the lever shift the detent 9 to the rear.

From the foregoing it will be seen that there has been provided a locking device which locks the rotary part of the bolt mechanism in interlocking connection with the receiver, thus preventing the accidental shifting of the bolt mechanism to an inoperative position. This locking device is controllable either manually or automatically so as to release the bolt mechanism. The automatic control is preferably effected through the firing of the gun due preferably to the shifting of the firing pin in firing, the firing pin engaging with a lever which shifts the detent out of locking position.

What I claim as my invention and desire to secure by Letters Patent is:

1. A firearm of the type in which the breech mechanism has a sliding movement in the receiver and a portion which rotates to lock the mechanism in firing position, distinguished by a locking device which locks the rotary part against rotary movement, and is operated automatically to release the rotating part on the firing of the gun.

2. A firearm of the type having a reciprocatory bolt mechanism provided with a firing pin movable with said bolt mechanism and also relatively thereto and also with a portion rotatable to lock the bolt mechanism in firing position, distinguished by a locking device for locking the rotary portion against rotary movement, said locking

CONFIDENTIAL-SUBJECT TO PROTECTIVE ORDER
KINZER V. REMINGTON
R2539598

device being controlled by the firing pin to release the rotary portion on the firing of the gun.

3. A firearm of the type having a reciprocatory bolt, a sleeve reciprocating with said breech bolt but held against rotation with the bolt, distinguished by a locking device which is carried by the sleeve, coöperates with the breech bolt to hold the latter against rotation and is operated automatically on the firing of the gun to release the breech bolt.

4. A firearm of the type having a rotary and reciprocatory breech bolt, a sleeve reciprocating with the bolt but held against rotation therewith, and a firing pin moving with the sleeve and the breech bolt and also relatively to said parts, distinguished by a locking device for holding the breech bolt against rotation, said locking device being mounted upon the sleeve and controlled by the firing pin.

5. A firearm comprising a rotary and reciprocatory breech bolt, a sleeve reciprocating with the bolt but held against rotation with said bolt, a firing pin reciprocating with the sleeve and the bolt and also movable relatively to said parts, a detent slidably mounted upon the sleeve and adapted to coöperate with the breech bolt to hold the latter against turning, and a lever mounted on the sleeve and having a manually operable portion and also a portion arranged to be operated by the firing pin.

GUSTAV A. BADER.

WEIGEL

CONFIDENTIAL-SUBJECT TO PROTECTIVE ORDER
KINZER V. REMINGTON

R2539599

RD-69 REV. 6-58

REMINGTON ARMS COMPANY, INC.

INTER-DEPARTMENTAL CORRESPONDENCE

Remington DU PONT

BRIDGEPORT, CONNECTICUT

JULY 16, 1981

FRED MARTIN

SUBJECT: BOLT LATCH - RA-0247

Enclosed is a revised draft patent application on your invention, which covers the alternative of omitting a detent notch from the latch lever. The principal changes are on pages 3 (discussion of Stahl and Bader Patents modified); 4 (detent described as applicable to only one embodiment); 10 and 11 (please consider carefully whether the comparisons drawn between the alternative versions are valid); the Claims on pages 12-15; and the Abstract on page 16. The other pages are unchanged.

If you are satisfied that the description is adequate and accurate, please sign the Declaration attached to the "PTO copy", sign the Assignment and have it notarized, and return these papers for filing in the Patent and Trademark Office. But if changes are needed, please give me a call. I'll be in Ilion on July 22nd, and can discuss this more fully then if you wish.

Bill Ericson

WILLIAM L. ERICSON
SENIOR PATENT COUNSEL

WLE/dt
Encls.

RA-0247

CONFIDENTIAL-SUBJECT TO PROTECTIVE ORDER
KINZER V. REMINGTON

M-700 BOLT LATCH
ON BOLT PLUG

1

"A" Series Photos

Bolt lock on bolt plug - independent of safety

A-1 Gun cocked - ready to fire
Safe in "Fire" position
Bolt locked

A-2 Gun cocked
Safe in "ON SAFE" position
Bolt locked

A-3 Gun cocked
Safe in "ON SAFE" position
Bolt latch depressed
Bolt is unlocked and can be rotated

F.E. Martin:T
4-11-78

WEIGEL

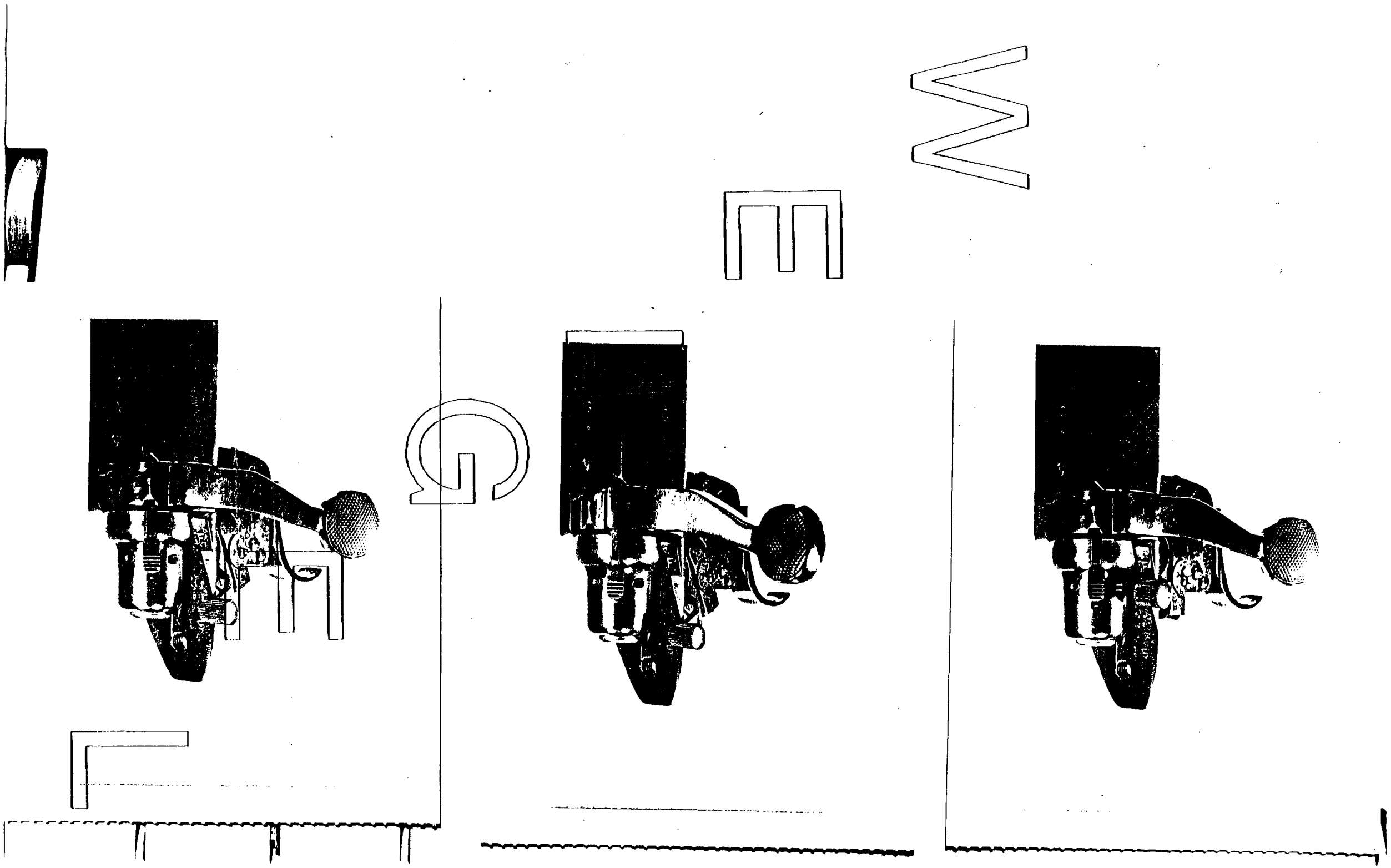

CONFIDENTIAL-SUBJECT TO PROTECTIVE ORDER
KINZER V. REMINGTON

M-700 Fire Control #1
Blocked Trigger Sear

R2539604

CONFIDENTIAL-SUBJECT TO PROTECTIVE ORDER
KINZER V. REMINGTON

CHRONOLOGICAL RECORD OF TEST

MODEL & DESCRIPTION M-700 Bolt Lock & Fire Contro

CALIBER or GAUGE

DATE	TEST	TESTER	PAGE NO.
1-23-81	Fire M-700 w/Proto-Type Bolt Locks And Fire Controls Delivered To Test Lab For Test - Guns Headspaced And Proofed Guns Returned For Examination Of Bolt Locks Also Gun #2973 Follows Down.		
Dry Cycle 16 Feb 81	#7525 - Control - OK.		
	#2973 - Follow Down Don't Lock 23/100		
	#5544 - OK.		
	#4915 - 17/100 Don't Lock		
No Detent On Bolt Lock	#4869 - 4/100 " "		
No Detent On Bolt Lock ①	#8548 - 6/100 " "		
2-24-81	#1 - No Detent On Bolt Lock 10,043 Dry Cycle - Firing Pin Tip Broke Std. Fire Control New Trig. Spring And Adj. Screw - Trig Bent - Connector Shows Wear Inside Of Clearance Hole Trig. Also Has Deformation To Front Face - Trig. Stop Screw Is Deformed On Stop Surface - No Damage Noted To Trig. Spring Or New Adj. Screw		
	#2 - No Detent On Bolt Lock 10055 Dry Cycles New Style Fire Control - New Trig. Spring And Adj. Screw No Damage Noted		

(Cont)

CONFIDENTIAL-SUBJECT TO PROTECTIVE ORDER
KINZER V. REMINGTON

CHRONOLOGICAL RECORD OF TESTING

MODEL & DESCRIPTION M-700 Bolt Lock & Fire Control

CALIBER or GAUGE

DATE 2-24-81 TEST TESTER PAGE NO.

#2 - Continued - With Barreled Action Out Of Stk. If Trigger Is Pulled Then Safety Lever Is Move To Rear (Safe) Position Then Bolt Closed - Gun Will Fire On Safe Release - Trigger Is Trapped Rearward By Trigger Block Plunger And Load Exerted By Safety Lever - Bolt Lock Functions As Intended Fire Control Not Removed Or Tampered With

#3 - Detented Bolt Lock
10,000 cycles - No Breakage Of Firing Pin - Gun Will No Duplicate Actions Of No. 2 Gun - Safety Hits Bolt Plug - Gun Appears To Not Have Been Fully Closed On Firing Cocking Cam Damaged - Safety Function O.K. - Bolt Lock Intermittant At Times.

#4 - Detented Bolt Lock
10,308 Cycles - No Breakage Noted Trigger Is Bent And Will Bind In Trigger Guard - Will Not

CONFIDENTIAL-SUBJECT TO PROTECTIVE ORDER
KINZER V. REMINGTON

CHRONOLOGICAL RECORD OF TESTS

MODEL & DESCRIPTION M-700 Bolt Lock & Fire Control

CALIBER or GAUGE

DATE 5-25-81 TEST TESTER PAGE NO.

#4 (Continued) Duplicate Actions Of Guns No. #2 & #3. Bolt Lock Action Intermittant At Times - Safety Function O.K.

#5 Detented Bolt Lock
10488 Cycles - No Breakage Noted - Bolt Lock Retaining Pin Loose - Bolt Lock Functions Intermittantly - Safety Function - Cannot Duplicate Actions Of No's 2 & 3

Control Gun - Standard Fire Control As Produced
10000 Cycles Safety - Bolt Lock Integral
No Breakage Noted - Trigger Bent
Fire Control Not Disassembled

CONFIDENTIAL-SUBJECT TO PROTECTIVE ORDER
KINZER V. REMINGTON

CHRONOLOGICAL RECORD OF TESTING

MODEL & DESCRIPTION M-700 Trigger Block

CALIBER or GAUGE

DATE 4/8/81/9/1/81 TEST New Design Evaluation TESTER AJL PAGE NO.

New triggers installed parts are hardened and colored

Trigger stock plungers have been replaced deformation noted

CONFIDENTIAL-SUBJECT TO PROTECTIVE ORDER
KINZER V. REMINGTON

RD-49-8

REMINGTON ARMS COMPANY, INC.

INTER-DEPARTMENTAL CORRESPONDENCE

Remington DU PONT PETERS DU PONT

"CONFINE YOUR LETTER TO ONE SUBJECT ONLY"

Xc: C. B. Workman
T. L. Capeletti
J. R. Snedeker
S. A. Fanelli
J. J. Bechard

June 24, 1981

To: J. S. Martin

From: F. E. Martin

Re: ~~M-700~~ Fire Control

Test results of April 8, 1981 show that the fire control performance is acceptable. I feel more testing is needed to prove conclusively our system is best.

I will order 30 fire controls fabricated and tested. With proper priority this can be completed by October 1, 1981.

FEM:ws

CONFIDENTIAL-SUBJECT TO PROTECTIVE ORDER
KINZER V. REMINGTON

RD-49-8

REMINGTON ARMS COMPANY, INC.

INTER-DEPARTMENTAL CORRESPONDENCE

Remington DUPONT PETERS DUPONT

"CONFINE YOUR LETTER TO ONE SUBJECT ONLY"

Xc: C.B. Workman
T. L. Capeletti
S. A. Fanelli

June 23, 1981

TO: ~~J. S.~~ Martin

FROM: ~~F. E.~~ Martin

RE: M-700 Trigger Assembly Estimate

Estimate figures $.32 additional cost per gun. For this amount we have the:

- Bolt lock removed.
- Ability to unload the gun in the safe position.
- Insurance that the trigger won't be moved with the safety "on safe".
- Trigger becoming inoperative when adjusted out of spec.

I feel we should not pass-up this opportunity to improve our fire control.

FEM:ws

CONFIDENTIAL-SUBJECT TO PROTECTIVE ORDER
KINZER V. REMINGTON

xc: R.L. Hall
H.K. Boyle
G.E. Fletcher
J.C. Hutton
J.H. Sweeney
T.A. Capeletti
J.P. Linde) In
G.D. Campbell) Turn
J.S. Martin) In
F.E. Martin) Turn
L.B. Bosquet) In
G.J. Hill) Turn

Est. #4305

June 18, 1981

S.D. Bennett

M/700 Trigger Assembly
Present Trigger Assembly vs. Proposed New Trigger Assembly

A high spot economic evaluation has been completed using the 1981 M/700 forecast comparing the present M/700 Trigger Assembly to a proposed new designed Trigger Assembly. The safety is revised in the proposed new Trigger Assembly, cutting off the locking arm and adding a countersink to actuate the new safety plunger when the "safe" is on. New designed side plates, trigger and a new stop screw and spring completes the proposed new Trigger Assembly.

The attached economic sheet indicates an annual cost increase of $35,270 in operating cost. A cost increase of $16,800 after amortization of operation charges of $16,500 will be realized with total capital required of $20,060.

Industrial Engineering Section
R.W. Farrington, Jr., Supervisor

A.E. Desmond

By: A.E. Desmond

AED/kc
Attached

CONFIDENTIAL-SUBJECT TO PROTECTIVE ORDER
KINZER V. REMINGTON

RD-6565
Rev.
SMT: 3-26-79

ESTIMATE # 4305

ESTIMATED SAVINGS & RETURN ON INVESTMENT

M/700 TRIGGER ASSEMBLY - PRESENT VS PROPOSED NEW ASSEMBLY DESIGNED WHERE THE SAFETY IS REVISED CUTTING OFF THE LOCKING ARM AND ADDING A COUNTERSINK TO ACTUATE THE SAFETY PLUNGER WHEN THE "SAFE" IS ON.

ENGINEER: A.E. DESMOND
DATE: 3-17-81

	PRESENT	PROPOSED		
Forecast Year	#2-1981			
Quantity Forecast	110,308			
OPERATING COSTS				
Purchased Parts	$ 181,390	$ 195,900	$	$
Raw Material				
Standard Labor	120,060	131,280		
Labor Variance @ 5%	6,000	6,560		
Industrial Relations @47.9%	60,380	66,220		
Supplies	1,680	1,770		
Tool Replacement	1,520	2,200		
Cutter Grind	1,320	2,320		
Tool Maintenance	890	1,020		
Maintenance	1,160	1,600		
Energy				
Equipment Depreciation @				
Sub Totals	$ 374,400	A $ 409,670	$	A $
Gross Savings Before Admin. Exp.		($ 35,270)		$
Admin. Exp. @4.3% Gross Savings		B $		B $
Sub Totals	$ 374,400	A+B $ 409,670	$	A+B $
SAVINGS IN OPERATING COST		($ 35,270)		$
Less: Income Tax @48.5 %		($-17,110)		($
Plus: Amortization of Investment Tax Credit		$		$
NET SAVINGS		($ 18,160)		$
INVESTMENT				
Project Expenditures		$ -		$
Manufacturing & Working Facilities		$		$
Net Change in Working Capital		$ 11,930		$
Total Capital Required for this Project		$ 11,930		$
RETURN ON INVESTMENT - THIS PROJECT		%		
Net Savings - After Amortization of Operation Charges		($ 16,800)		$
Project Operation Charges		$ 16,500		$
Less: Administration Expense @4.3 % & Income Taxes @48.5 % (Factor .5072)		($ 8370)		($
Total Capital Required Including Research & Development & Other Charges		$ 20,060		$
RETURN ON TOTAL CAPITAL REQUIRED		(83.7%)		
Equipment to be Released				
Increased Space Requirements (Decrease)				
Production Capacity				
Forecast Burdening		%		

CONFIDENTIAL-SUBJECT TO PROTECTIVE ORDER
KINZER V. REMINGTON

CONFIDENTIAL-SUBJECT TO PROTECTIVE ORDER
KINZER V. REMINGTON

M-700 New Design Bolt Lock and Fire Control Evaluation
Data Summary Sheet

4-6-81
A. J. Long / J. Hennings

		TEST RIFLES 1	2	3	4	5	CONTROL 6	7	8	9	10	11	12
	Type of Bolt Lock	Non Detented	Non Detented	Detented	Detented	Detented	—		Remington				
	Ser. #	A6748248	A6744869	A6744915	A6745544	A6752773	A6747525		Standards				
At 0 rounds	Headspace min. + →	.002"	.002"	.003"	.001"	.002"	.002"		.001"-.009"				
	Firing pin indent	.024"	.024"	.024"	.021"	.022"	.025"		.018"-.026"				
	Trigger pull	4.91#	5.00#	5.25#	5.50#	5.25#	5.00#		3#-5#				
	Bolt Lock Force →	3.00#	3.00#	6.60#	6.00#	6.60#	—						
After 100 rounds	Headspace min. + →	.002"	.002"	.004"	.002"	.003"			SAME				
	Firing pin indent	.028"	.026"	.025"	.020"	.021"							
	Trigger Pull	4.00#	4.75#	4.83#	5.50#	6.50#							
	Trigger pull meas. during dry cycles												
	Cycles 0	3.83#	4.50#	4.33#	4.33#	5.25#	4.25#						
	1000	3.91#	4.58#	4.66#	4.91#	7.41#	4.16#						
	2000	3.83#	4.66#	4.66#	4.58#	6.66#	4.25#						
	3000	3.58#	5.00#	4.66#	4.58#	6.08#	4.25#		SAME				
	4000	3.83#	5.00#	4.33#	5.16#	6.66#	4.00#						
	5000	4.00#	7.25#	4.58#	6.91#	6.55#	4.35#						
	6000	3.91#	7.58#	4.50#	6.83#	6.66#	4.32#						
	7000	3.54#	7.65#	4.58#	7.16#	6.50#	4.33#						
	8000	3.83#	7.33#	4.66#	7.33#	6.75#	4.33#						
	9000	3.50#	7.75#	4.58#	7.33#	6.83#	4.33#						
	10000	3.50#	4.50#	4.58#	7.16#	6.58#	4.16#						

WELL

G-88

DON'T SAY IT—WRITE IT

F. S. Martin

To A. D. Campbell

Date 3 Feb 81

From F. Martin

Please Prepare Cost Estimate For The M-700 Fire Control Consisting Of Supplied Parts — Parts That Have Been Altered Are Safety Cover - Trigger - Housing - Trig. Adj Screw And Trig Spring - Ltd Parts Are Trig. Block Plunger And Plunger Spring.

Assembly Drawing Is Being Completed And Will Be Available 16 Feb. 81

"SAFETY RULES ARE PERFECT TOOLS"

CONFIDENTIAL-SUBJECT TO PROTECTIVE ORDER
KINZER V. REMINGTON

45-706 20/20 BUFF

Report No. 81244

M-700 TRIGGER / SEAR BLOCK EVALUATION

No. 5

Aug. 31, 1982

R. Williams

M-700 6MMCAL. #6747525 Sample No. 5 Control Gun	1 Headspace	2 Firing Pin Indent	3 Safe (lbs) ON	3 Safe (lbs) OFF	4 Trigger Pull (lbs)	5 Sear Lift	6 Sear Engagement
Start of Test	Min+.003	.025	5.2	5.2	4.2	.019	.020
Live Fire after 1,000 rds.	Min+.003	.025	5.5	5.2	4.0		
Dry Cycle							
500 cyc.			6.3	7.6			
1000 cyc.			5.6	8.3			
1500 cyc.			5.8	7.8			
2000 cyc.			6.1	8.5			
2500 cyc.			5.1	8.3		.021	.0205
Live Fire after 2,000 rds.	Min+.003	.025	5.5	5.1	4.5	.020	.020
Dry Cycle							
3,000 cyc.			6.6	8.1			
3500 cyc.			6.8	8.1			
4000 cyc.			6.1	7.6			
4500 cyc.			6.1	7.3			
5000 cyc.			6.0	6.5		.020	.020
Live Fire after 2,500 rds. HL.	Min+.003	.025	5.1	4.8	5.1		
Dry Cycle							
5500 cyc.			6.1	8.0	4.7		
6000 cyc.			6.1	8.0	4.6		
6500 cyc.			7.0	8.5	4.6		
7000 cyc.			6.8	8.1	4.7		
7500 cyc.			6.3	7.6	4.8		

CONFIDENTIAL-SUBJECT TO PROTECTIVE ORDER
KINZER V. REMINGTON

NATIONAL 45-706 20/20 BUFF MADE IN U.S.A.

Report No. 8124

M-700 TRIGGER / SEAR BLOCK EVALUATION No. 4

Aug. 31, 1982

R. Williams

M-700	6MM CAL. #6745544 Sample No. 4	1 Headspace	2 Firing Pin Indent	3 Safe (lbs) ON	3 Safe (lbs) OFF	4 Trigger Pull (lbs)	5 Sear Lift	6 Sear Engagement
	Start Of Test	Min+.002	.022	8.3	5.4	3.8	.018	.034
	Live Fire after 1,000 rds	Min+.002	.022	6.8	5.2	4.0		
	Dry Cycle							
	500 cyc.			7.7	7.7			
	1000 cyc.			7.8	7.5			
	1500 cyc.			6.8	7.3			
	~~2,000 cyc.~~			7.4	7.2			
	2500 cyc.			7.2	7.7		.017	.035
	Live Fire after 2,000 rds.	Min+.003	.022	7.3	4.5	3.8	.0155	.035
	Dry Cycle							
	3000 cyc.			6.7	8.7			
	3500 cyc.			7.5	7.7			
	4000 cyc.			7.7	6.7			
	4500 cyc.			7.5	7.7			
	5000 cyc.			7.7	6.8		.017	.036
	Live Fire after 2,500 rds. HL.	Min+.003	.022	8.8	4.3	4.3		
	Dry Cycle							
	5500 cyc.			8.2	9.0	4.5		
	6000 cyc.			7.3	9.0	4.1		
	6500 cyc.			7.5	9.3	4.2		
	7000 cyc.			8.3	9.2	4.3		
	7500 cyc.			8.7	8.3	4.3		

CONFIDENTIAL-SUBJECT TO PROTECTIVE ORDER
KINZER V. REMINGTON

NATIONAL 45-706 20/20 BUFF

Report No. 812441

M-700 TRIGGER/SEAR BLOCK EVALUATION

No. 3

Aug. 31, 1982

R. Williams

M-700	6MMeal. #A6744915 Sample No. 3	1 Headspace	2 Firing Pin Indent	3 Safe (in lbs) ON	3 Safe (in lbs) OFF	4 Trigger Pull (lb)	5 Sear Lift	6 Sear Engagement
	START OF TEST	Min. +.004"	.025"	9.1	6.4	4.7	.015"	.025"
	LIVE FIRE after 1,000 rds.	Min. +.004"	.026"	9.7	5.7"	4.1		
	DRY CYCLE							
	~~500 cyc.~~			8.2	6.9			
	1000 cyc.			8.3	7.0			
	1500 cyc.			8.8	6.3			
	~~2000 cyc.~~			9.2	7.0			
	2500 cyc.			9.8	6.0		.012"	.032"
	LIVE FIRE after 2,000 rds.	Min. +.005"	.026"	10.2	5.2		.013"	.033"
	DRY CYCLE							
	3000 cyc.			8.5	8.5			
	3500 cyc.			9.2	7.2			
	4000 cyc.			9.2	9.0			
	4500 cyc.			8.7	9.7			
	5000 cyc.			9.5	12.2		.015"	.032"
	LIVE FIRE after 2,500 rds. HL	Min. +.005"	.025"	9.8	5.2			
	DRY CYCLE							
	5500 cyc.			8.3	8.3			
	6000 cyc.			9.2	8.8			
	6500 cyc.			9.7	9.3			
	7000 cyc.			8.5	12.0			
	7500 cyc.			9.5	12.0			

CONFIDENTIAL-SUBJECT TO PROTECTIVE ORDER
KINZER V. REMINGTON

45-706 20/20 BUFF

Report No. 81244

M-700 TRIGGER/SEAR BLOCK EVALUATION

No. 2

Aug. 31, 1982

R. Williams

M-700	6MM cal. #A6744869 Sample No. 2	1 Headspace	2 Firing Pin Indent	3 Safe (in lbs.) ON	3 Safe (in lbs.) OFF	4 Trigger Pull (in lbs.)	5 Sear Lift	6 Sear Engagement
	START OF TEST	Min.+.003"	.023"	6.5	5.3	4.3	.0135"	.026"
	LIVE FIRE after 1000rds.	Min+.004"	.024"	6.4	5.2	4.4		
	DRY CYCLE							
	~~500cyc.~~			5.9	7.8			
	1000cyc.			6.0	6.7			
	1500cyc.			6.0	7.0			
	~~2000cyc.~~			5.5	6.7			
	2500cyc.			5.3	7.7		.015	.025
	LIVE FIRE after 2000rds.	Min+.004"	.023"	5.7	4.8	4.2	.014"	.029"
	DRY CYCLE							
	3000cyc.			6.5	8.0			
	3500cyc.			5.5	7.3			
	4000cyc.			5.8	7.2			
	4500cyc.			6.2	7.7			
	5000cyc.			7.8	8.0		.018	.0285
	LIVE FIRE after 2500rds. HL.	Min.+.004"	.023"	5.8	4.5	4.7		
	DRY CYCLE							
	5500cyc.			7.0	9.5	4.8		
	6000cyc.			6.7	8.7	4.5		
	6500cyc.			6.7	7.8	4.5		
	7000cyc.			7.2	7.8	4.3		
	7500cyc.			6.6	8.5	4.5		

CONFIDENTIAL-SUBJECT TO PROTECTIVE ORDER
KINZER V. REMINGTON

R2539618

NATIONAL 45-706 20/20 BUFF

Report No. 81244

M-700 TRIGGER/SEAR BLOCK EVALUATION

No. 1

Aug. 31, 1982

R. Williams

M-700 6MM CAL. #A6752973 Sample No. 1	1 Headspace	2 Firing Pin Indent	3 Safe (lbs) ON	3 Safe (lbs) OFF	4 Trigger Pull (lbs)	5 Sear Lift	6 Sear Engagement
Start Of Test	Min. +.004"	.025"	6.2	6.0	4.0	.0105"	.035"
Live Fire after 1000 rds.	Min. +.004"	.025"	6.2	6.8	4.25		
Dry Cycle							
500 cyc.			5.5	8.6			
1000 cyc.			5.8	9.7			
1500 cyc.			5.7	9.5			
2000 cyc.			5.5	8.7			
2500 cyc.			5.7	9.3		.0105"	.035"
Live Fire after 2,000 rds.	Min. +.004"	.025"	5.6	7.3	4.0	.0165"	.027"
Dry Cycle							
3000 cyc.			6.2	9.3			
3500 cyc.			6.5	10.3			
4000 cyc.			5.7	9.2			
4500 cyc.			6.2	9.5			
5000 cyc.			6.2	9.2		.0165"	.027"
Live Fire after 2,500 rds. HL.	Min. +.004"	.025"	6.3	9.5	4.5		
Dry Cycle							
5500 cyc.			6.2	10.5	4.8		
6000 cyc.			6.2	10.0	4.6		
6500 cyc.			6.2	8.8	4.6		
7000 cyc.			6.0	7.8	4.8		
7500 cyc.			6.2	9.8	4.6		

CONFIDENTIAL-SUBJECT TO PROTECTIVE ORDER
KINZER V. REMINGTON

WEIGEL

APPENDIX "A"

CONFIDENTIAL-SUBJECT TO PROTECTIVE ORDER
KINZER V. REMINGTON

TEST PROCEDURE – CONT'D.

5. The rifles were then subjected to another Safe On/Off dry cycle test. They were brought to the 5,000 cycle level. (2,500 additional cycles) Safe on/off measurements were taken every 500 cycles and sear lift and engagement wear measured at the 5,000 cycle level.

These same procedures were followed until live fire totaled 2,500 rounds per rifle and safe On/Off dry cycle totaled 7500 cycles per rifle.

C. AMMUNITION

Remington 80 grain Pointed Soft Point.

WEIGEL

REPORT TEXT

All four (4) new trigger assemblies were subjected to the following trick test:

- Place Safety Switch in the Safe "On" position.
- Close the bolt.
- Put constant pressure on the trigger attempting to fire the rifle.
- Push the Safety Switch from the "On" position to the "Off" position.
- Does the firing pin fall?

All four (4) New Design Trigger Assemblies with the trigger /sear blocked passed this test. In all four (4) guns the firing pin did not fall.

NOTE: The measurements recorded for the Safe On/Off forces are questionable. There is no way to determine if they are within Remington Standards, because there are no standards written for these forces with this fire control assembly. The only Remington Standards written for Safe On/Off forces, pertain to the common fire control. That Standard is:

4 – 8 lbs. – One sharp click
Double click not allowed

The Safe On/Off forces measured in this test range from 5.25 lbs to 10.2 lbs. – almost a 5 lb. difference. (Refer to Appendix A, Data Sheets No. 1 – 5 for all Safe On/Off measurements).

TEST PROCEDURE

A. MEASUREMENTS

The following measurements were taken on the fire rifles used in this test:

- Headspace
- Firing Pin Indent
- Trigger Pull
- Sear Lift
- Sear Engagement
- Safe On/Off Forces

B. TEST CONDITIONS

1. After every 20 rounds fired, the safety was checked. This was done by holding the trigger and pushing the safety switch from safe to fire.

2. After 1,000 rds. of live fire all the rifles were cleaned and they were remeasured. (Jack Shooting).

3. The rifles were then subjected to Safe On/Off dry cycle. Each rifle was cycled for 2,500 cycles, with Safe On/Off measurements taken every 500 cycles and Sear Lift and Engagement at the 2500 cycle level.

4. The rifles were then live-fired to the 2,000 round level. (Jack Shooting) Measurements were taken at this level.

CONFIDENTIAL-SUBJECT TO PROTECTIVE ORDER
KINZER V. REMINGTON

REMINGTON ARMS COMPANY, INC.
Firearms Research Division

Report No. 812441

September 10, 1982

TO: J. H. Hennings

FROM: R. Williams

REPORT TITLE: NEW DESIGN M/700 TRIGGER/SEAR BLOCK EVALUATION

ABSTRACT:

A total of (5) M /700 Fire control assemblies with the New Design safety assemblies, were delivered to the Test Lab by Fred Martin for testing. This safety assembly blocks the trigger and the sear so that the firing pin won't fall when the trigger is held back while the safety switch is pushed from the safe to fire position. Both dry cycle and live fire endurance tests were used to test the assemblies. A M/700 fire control assembly (Current Production) was used as a control and (4) out of the (5) New Design assemblies were used in the test.

SCOPE OF TEST

To evaluate the functional performance of the New Design safety assembly, in the M/700 Rifle during lab testing.

TEST RESULTS

No functional problems arose during testing. Both the New Design safety and the control functioned normally. There was no significant change in the safe-On/Off forces measured before, during and after testing, on all the assemblies, including the control.

WIGEL

CONFIDENTIAL-SUBJECT TO PROTECTIVE ORDER
KINZER V. REMINGTON

R2539623

TEST & MEASUREMENT LAB REPORT

REPORT NUMBER: 812441

REPORT TITLE: New Design Trigger/Sear Block Evaluation

MODEL(S): 700 ADL

GAUGE OR CALIBER: 6MM Remington

DATE: 9/10/82

WORK ORDER NO.: C-1803-000

PART NAME: Trigger Assembly

DESIGNER/ENGINEER: F. Martin

TEST TYPE:

1. PHOTO LAB
2. STRENGTH TEST - NO. OF GUNS TESTED _____
3. FUNCTION TEST - NO. OF GUNS TESTED _____
4. ACCURACY TEST - NO. OF GUNS TESTED _____
5. MEASUREMENTS - TYPE: Static
6. ENVIRONMENTAL TEST
7. AMMUNITION TESTING & EVALUATION - TYPE: _____
8. VISUAL EVALUATION - _____ OUT OF _____ GUN SAMPLE
9. ENDURANCE - NO. OF GUNS TESTED: 5

   NO. OF ROUNDS PER GUN 2,500

   TOTAL ROUNDS FIRED IN TEST: 12,500

   AMMO TYPE: MAGS. _____; TARGET: _____

   RIM FIRE _____ CENTER FIRE 6mm

CONFIDENTIAL-SUBJECT TO PROTECTIVE ORDER
KINZER V. REMINGTON

RO-46-B

REMINGTON ARMS COMPANY, INC.

INTERDEPARTMENTAL CORRESPONDENCE

Remington DUPONT PETERS DUPONT

"CONFINE YOUR LETTER TO ONE SUBJECT ONLY"

Distribution: C. B. Workman
J. S. Martin
C. E. Ritchie
F. S. Martin

RESEARCH TEST and MEASUREMENT REPORT – Report No. 812441

NEW DESIGN M/700 TRIGGER/SEAR BLOCK EVALUATION

Prepared by: Ron Williams

Date Prepared: 9/10/82

Proofread and Cleared By:

J.H. Hennings, Foreman-Test Lab / R.E. Nightingale, Foreman-Measurement Lab — Signature — Date 9-15-82

C.E. Ritchie, Sr. Supervisor - Testing, Meas. & Mech. Analysis Lab — Signature — Date 9-14-82

CONFIDENTIAL-SUBJECT TO PROTECTIVE ORDER
KINZER V. REMINGTON

REMINGTON ARMS COMPANY, INC.
Firearms Research Division

February 24, 1982

Xc: C.B. Workman
J.S. Martin
C.E. Ritchie
J.W. Bower

TO: ALL RESEARCH PERSONNEL

FROM: J. W. BROOKS

On Friday, February 26, 1982 the Plant will remove from the Production area and the Custom Shop all safety assemblies with the bolt lock arm. They will be delivered to Arms Service. All new trigger assemblies will have the bolt lock removed.

Beginning February 26 all Model 700 rifles (Right and Left Hand) 40XB, 40XC, 40BBR and 40XR rifles that are returned to Production should be tagged to identify them if they have a safety with the bolt lock arm.

JWB:T

CONFIDENTIAL-SUBJECT TO PROTECTIVE ORDER
KINZER V. REMINGTON

RD-69 REV. 6-58

REMINGTON ARMS COMPANY, INC.

INTER-DEPARTMENTAL CORRESPONDENCE

Remington

DUPONT

CC: J. S. MARTIN (No Attach.)
C. B. WORKMAN (No Attach.)

BRIDGEPORT, CONNECTICUT

JANUARY 4, 1982

FRED MARTIN

RE: BOLT ~~ACTION~~ SAFETY WITH SEAR AND TRIGGER BLOCKS

A prelim~~inary pa~~tent search has been made on the trigger assembly shown in your drawing of February 10, 1981 (unnumbered), which shows a Model 700 sear-blocking safety with the addition of a spring-biased trigger block plunger (SKB-3633). This plunger is slidable transversely in a hole through the trigger; it has an enlarged tip which is depressed by the safety lever into locking engagement with the trigger in the "safe" position, but releases the trigger by seating in a conical recess in the safety lever in the "fire" position.

My search did not disclose any competitively-owned patents that would pose any infringement risks in connection with your design. While other types of safeties were found that block both the sear and the trigger, I believe that patent protection may be obtainable in the event your design is used.

Hildebrandt Patent 3,608,224 shows a safety lever 30 which carries a bent rod 36, and in the "safe" position, slides this rod between opposed surfaces of the sear 16 and trigger 8 to block movement of either.

Horsrud Patent 2,310,238 has a safety slide 123 formed with a vertical arm whose extremities 122, 125 are ~~engaged~~ with the sear 66 and the trigger 87 to block movement ~~of either~~, when the slide is moved to the "safe" position.

These references are representative of the state of the art; no patent has been found that discloses a system equivalent to yours.

W. L. Ericson

WILLIAM L. ERICSON
SENIOR PATENT COUNSEL

WLE/dt
Attachs.

45.100

CONFIDENTIAL-SUBJECT TO PROTECTIVE ORDER
KINZER V. REMINGTON

#3,608,224

Sept. 28, 1971 C. B. HILDEBRANDT 3,608,224

SEAR-TRIGGER SAFETY MECHANISM FOR FIREARMS

Filed Dec. 19, 1969

Fig. 1.

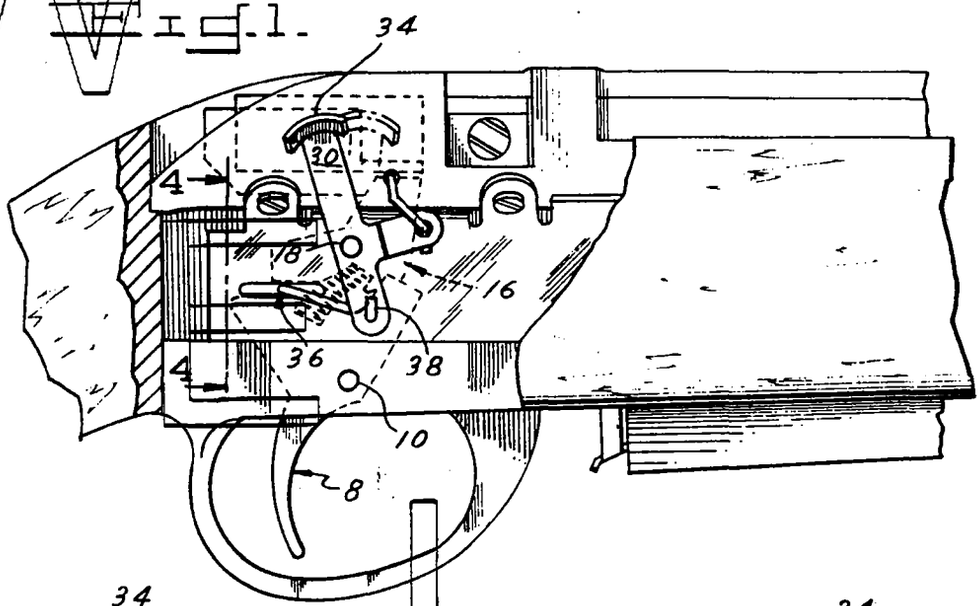

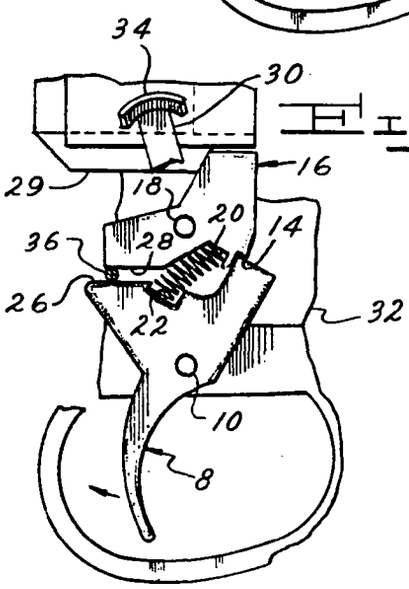

Fig. 2.

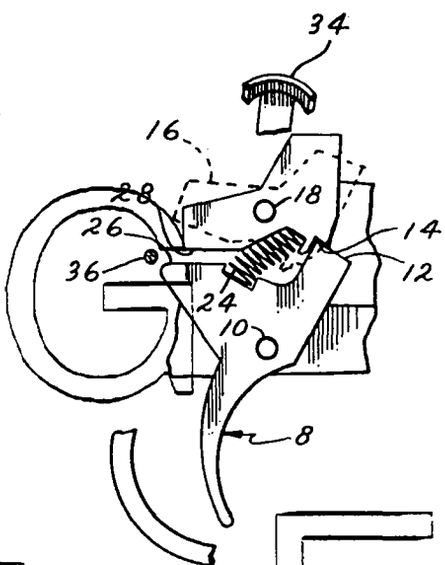

Fig. 3

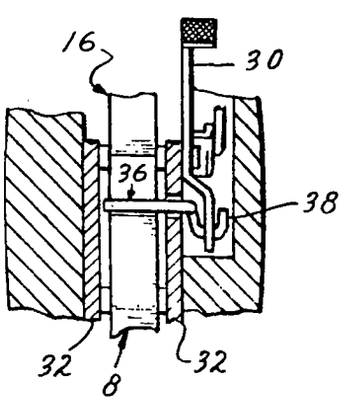

Fig. 4.

INVENTOR.
CARL B. HILDEBRANDT
BY Chapin, Neal & Dempsey
Attorneys

colon copy

#3,608,224

CONFIDENTIAL-SUBJECT TO PROTECTIVE ORDER
KINZER V. REMINGTON

United States Patent Office

3,608,224

Patented Sept. 28, 1971

1

3,608,224
SEAR-TRIGGER SAFETY MECHANISM FOR FIREARMS

Carl B. Hildebrandt, Springfield, Mass., assignor to Emhart Corporation, Bloomfield, Conn.

Filed Dec. 19, 1969, Ser. No. 886,716

Int. Cl. F41c *17/00, 17/08*

U.S. Cl. 42—70C 6 Claims

ABSTRACT OF THE DISCLOSURE

Safety mechanism for firearms having a trigger and sear combination in which the trigger has a portion engaged in a notch of the sear when the trigger is in its rest position. The trigger and sear are each pivotable for release of the trigger from the notch of the sear and include spaced opposed portions movable toward each other on said release of the trigger. A safety which has a portion movable between the spaced opposed portions of the trigger and sear and which is in compression therebetween when an attempt is made to pull the trigger.

BACKGROUND

Safety mechanism for guns are available in a wide variety of types. In general, such safety mechanisms include a block, lever or pin which is moved or swung into blocking engagement with the hammer, sear, trigger or bolt of the gun. All too frequently guns have been fired and people killed or wounded when the safety was "thought to be on." Analysis of many of these accidental firings has shown that in some cases the critical portion of the safety had been broken or distorted as a result of the gun being dropped or sustaining some other sharp impact when the safety was "on." Of course, if the operative portion of the safety is damaged or broken, the safety is generally rendered inoperable or imperfectly operable. In many instances the end of a safety lever or pin has been sheared off permitting inadvertent discharge of the gun, since usually such damage is not known to the operator.

It is the principal object of this invention to provide a safety which is simple in construction and operation while being most reliable and effective in its operation.

Another object of this invention is to provide a safety in which the operative portion thereof is not subject to shear or bending forces when in a "safe" position.

The above and other objects of this invention will be more readily apparent from the following description and with reference to the accompanying drawings, in which:

FIG. 1 is a side elevational view of a portion of a gun partially in section showing a safety embodying this invention;

FIG. 2 is a partial elevational view showing the safety in FIG. 1 in greater detail;

FIG. 3 is a view similar to FIG. 2 with the safety in different operative relationship; and

FIG. 4 is a section taken along line 4—4 of FIG. 1.

The gun comprises a trigger **8** pivotable about a pin **10**. The trigger includes a latch portion in the form of a tooth or shoulder **12** forward of the pivot **10** for interlocking engagement with a notch **14** in sear **16**. The sear **16** is mounted for pivotable movement about a pin **18** which is located above the trigger pivot pin **10**. The trigger and sear are each provided with recesses **20** and **22** to receive the outer ends of a compression spring **24** which urges toward counterclockwise rotation both the trigger and sear. The spring serves as the trigger spring and to return the trigger and sear to their rest positions (FIG. 2) after firing.

The outer surface of shoulder **12** of the trigger is configured for surface to surface engagement with the opposed surface portion of the sear, so that when the trigger is pulled or rotated clockwise, the sear will be rotated counterclockwise through a small angle before the shoulder **12** of the trigger clears the sear notch.

2

Rearward of their respective pivot pins the trigger and sear each include ledges **26** and **28** respectively, which are in spaced opposed, generally parallel relationship when the action is cocked, as shown in FIG. 2. When the trigger is pulled, the ledges move toward each other until the shoulder **12** clears the sear notch **14**. When released, the sear is rotated clockwise by the movement of striker lug **29** moving forward for firing the gun. The bolt and striker mechanism may be of the same general type as disclosed in U.S. Pat. No. 2,765,562, issued on Oct. 9, 1956.

In accordance with this invention the safety comprises a lever **30** pivotable about the pin **18** supported adjacent its outer ends by opposite side wall portions of the housing member **32**. The safety lever includes an actuating flange portion **34** by which the lever may be pivoted forward and backward for placing its safety "off" and "on" respectively. Adjacent its lower end, this safety lever is connected to a rod **36**.

As best shown in FIGS. 1 and 4, the lever **30** has an aperture adjacent its lower end for receiving the outer end portion of the rod **36**. In the embodiment shown, the outer end of the rod is provided with a hook **38** of generally U-shaped configuration by which the lever is drivingly coupled to the rod. From the hook portion **38** the rod extends rearwardly and generally parallel to the path of movement of the safety lever **30** and then transversely or laterally to the direction of movement of the lever **30**. The rod **36** is movable from a position in which it is interposed between the opposed ledges **26** and **28** of the sear and trigger to a position in which it is clear of the path of pivotal movement of the sear and trigger (FIG. 3).

The rod may be made of any suitable material of sufficient rigidity and strength to serve as a safety without distortion or breaking. It has been found that metal wire or rod stock, such as steel wire on the order of 1/16"–3/32" in diameter is suitable. The rod stock material selected may be somewhat softer than the steel of the sear and trigger so that in effect it cushions or absorbs any impact or shock transmitted from one to the other of these parts, thereby further minimizing the possibility of breakage or damage. It is important that the diameter of the rod or wire stock be sufficient to block any substantial pivotable movement of the sear or trigger, otherwise the trigger will be released from the sear notch. The diameter should also be such that it will be readily accommodated in the space between the two ledges **26** and **28**.

When it is desired to place the safety "on," the actuator **34** of lever **30** is simply moved rearward. Since the lower end of the lever is coupled to safety rod **36** by its hook portion **38**, the transverse portion of the rod is carried into a blocking position between the rear ledge portions **26** and **28** of the trigger and sear, as shown in FIGS. 2 and 4. In this position, any attempt to fire the gun by pulling the trigger is entirely blocked, as is also movement of the sear. A simultaneous and mutual blocking of the sear and trigger is thereby achieved since as previously mentioned, to release the sear, the trigger must move clockwise while the sear must move counterclockwise. Thus, with the safety "on" when a firing pull is exerted on the trigger, the transverse portion of the rod is "squeezed" or in compression between the ledge portions **26** and **28** of the trigger and sear respectively.

When it is desired to fire the gun, the actuator **34** of the safety lever is moved forward, whereby the lower end of the lever moves the safety rod **36** rearwardly until it is clear of the path of rotation of the trigger and sear.

CONFIDENTIAL-SUBJECT TO PROTECTIVE ORDER
KINZER V. REMINGTON

R2539629

Thereafter when the trigger is pulled, its sear engaging portion **12** moves out of the sear notch **14** and the striker lug **29** under influence of the striker spring (not shown) pivots the sear clockwise, as shown in dotted lines in FIG. 3, as the striker moves forwardly to fire the gun. The coil spring **24** then serves to return the trigger and sear to their rest positions and operation of the bolt will again cock the gun as shown in FIG. 2.

Inasmuch as the safety rod is disposed between the opposed surfaces of the sear and trigger, which in the particular embodiment is on the order of 3/16" in width, the likelihood of damage or breakage of the safety, or the engaged portions of the firing mechanism from a sharp impact to the gun is for all practical purposes eliminated.

Having thus disclosed the invention, what is claimed is:

1. Safety mechanism for a gun having a striker releasably retained by a sear and trigger combination, said trigger and sear being pivotable in opposite directions and each including spaced opposed surface portions pivotable toward each other for release of the sear on firing movement of said trigger, and a safety including a portion selectively movable into and out of blocking relation between the opposed surface portions of the sear and trigger, said safety when in blocking relation simultaneously preventing firing movement of the trigger and sear.

2. Safety mechanism as set forth in claim 1 in which said safety comprises a rod, which when in blocking engagement between the trigger and sear is in compression against firing movement of the combination of the trigger and sear.

3. Safety mechanism for a gun having a striker releasably retained by a sear and trigger combination, said trigger including a shoulder and said sear including a notch for releasably receiving the shoulder of the trigger, said trigger and sear being pivotable in opposite directions and each including spaced opposed surface portions pivotable toward each other for release of the sear and said trigger, and a safety including a portion selectively movable into and out of blocking relation of said opposed surfaces of the sear and trigger, said safety when in its blocking relation simultaneously preventing movement of the trigger and sear whereby the shoulder is retained in the notch of said sear.

4. Safety mechanism as set forth in claim 3 in which said safety includes a pivotable lever and a rod drivingly coupled to said lever, and a portion movable into and out of blocking relation between said spaced opposed portions of the trigger and sear.

5. Safety mechanism as set forth in claim 3 in which the trigger and sear are pivotable at points, one generally above the other, said shoulder of the trigger and the notch of the sear being disposed to one side of said pivot points, said opposed surfaces being in the form of ledges disposed to the opposite side of said pivot points, the rod of said safety including a portion movable into and out of blocking relation between said ledges for simultaneously blocking pivotable movement of the sear and trigger, and being in compression when preventing said gun from being fired when said gun is on "safe."

6. Safety mechanism as set forth in claim 5 in which said safety comprises a pivotable lever with a metal rod coupled to said lever and with a transverse portion disposed for blocking movement of said sear and trigger when the gun is on "safe."

References Cited

UNITED STATES PATENTS

2,765,562	10/1956	Rober et al.	42—70E
2,976,637	3/1961	Robinson, Jr.	42—70D
3,130,513	4/1964	Knode, Jr.,	42—70E

BENJAMIN A. BORCHELT, Primary Examiner

C. T. JORDAN, Assistant Examiner

CONFIDENTIAL-SUBJECT TO PROTECTIVE ORDER
KINZER V. REMINGTON

CLASS SUB

Feb. 9. 1943. O. HORSRUD 2,310,238

FIREARM

Filed Aug. 7, 1939 2 Sheets-Sheet 1

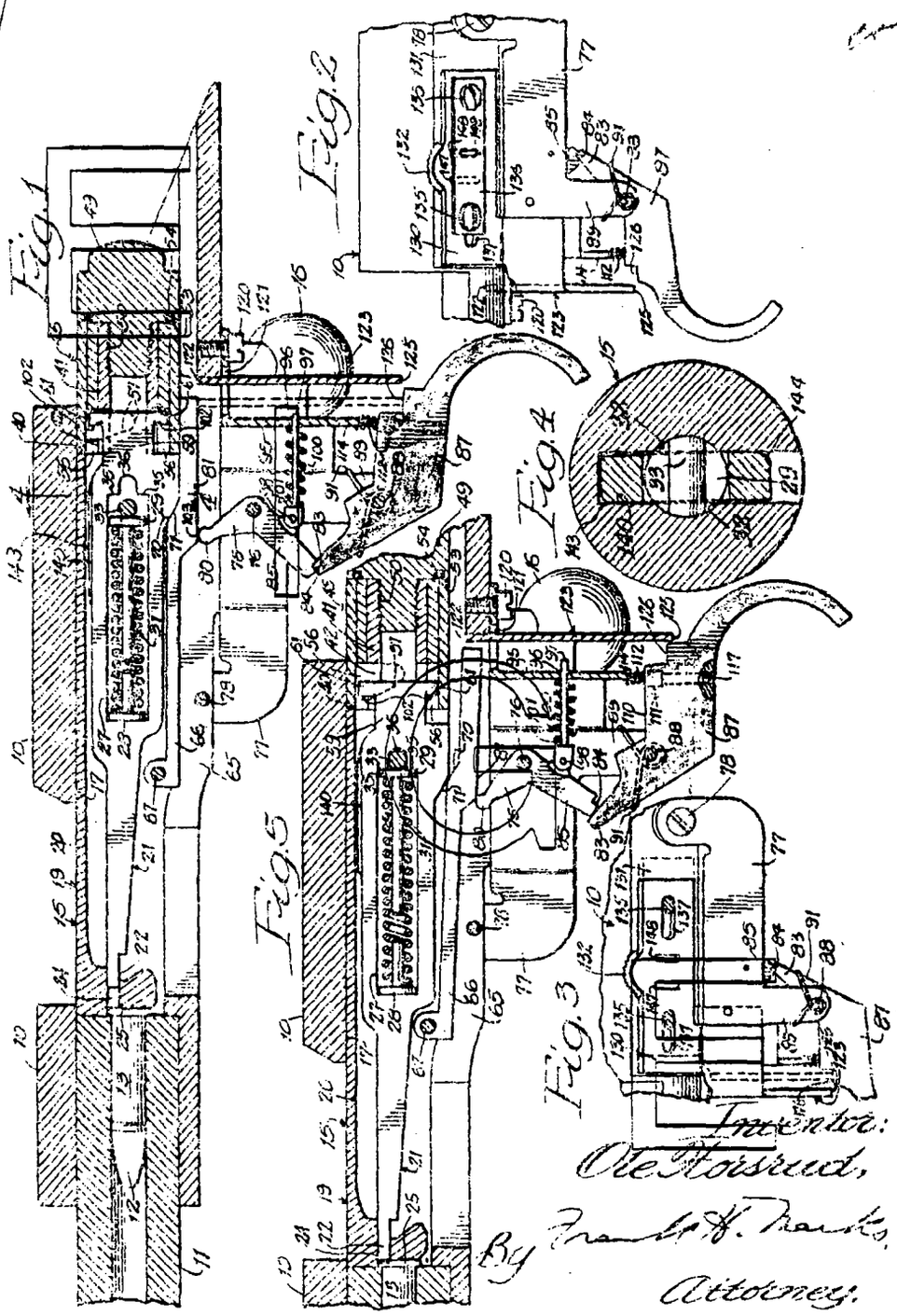

Inventor:
Ole Horsrud,
By Frank H. Marks,
Attorney.

CONFIDENTIAL-SUBJECT TO PROTECTIVE ORDER
KINZER V. REMINGTON

Feb. 9, 1943. O. HORSRUD 2,310,238

FIREARM

Filed Aug. 7, 1935 2 Sheets-Sheet 2

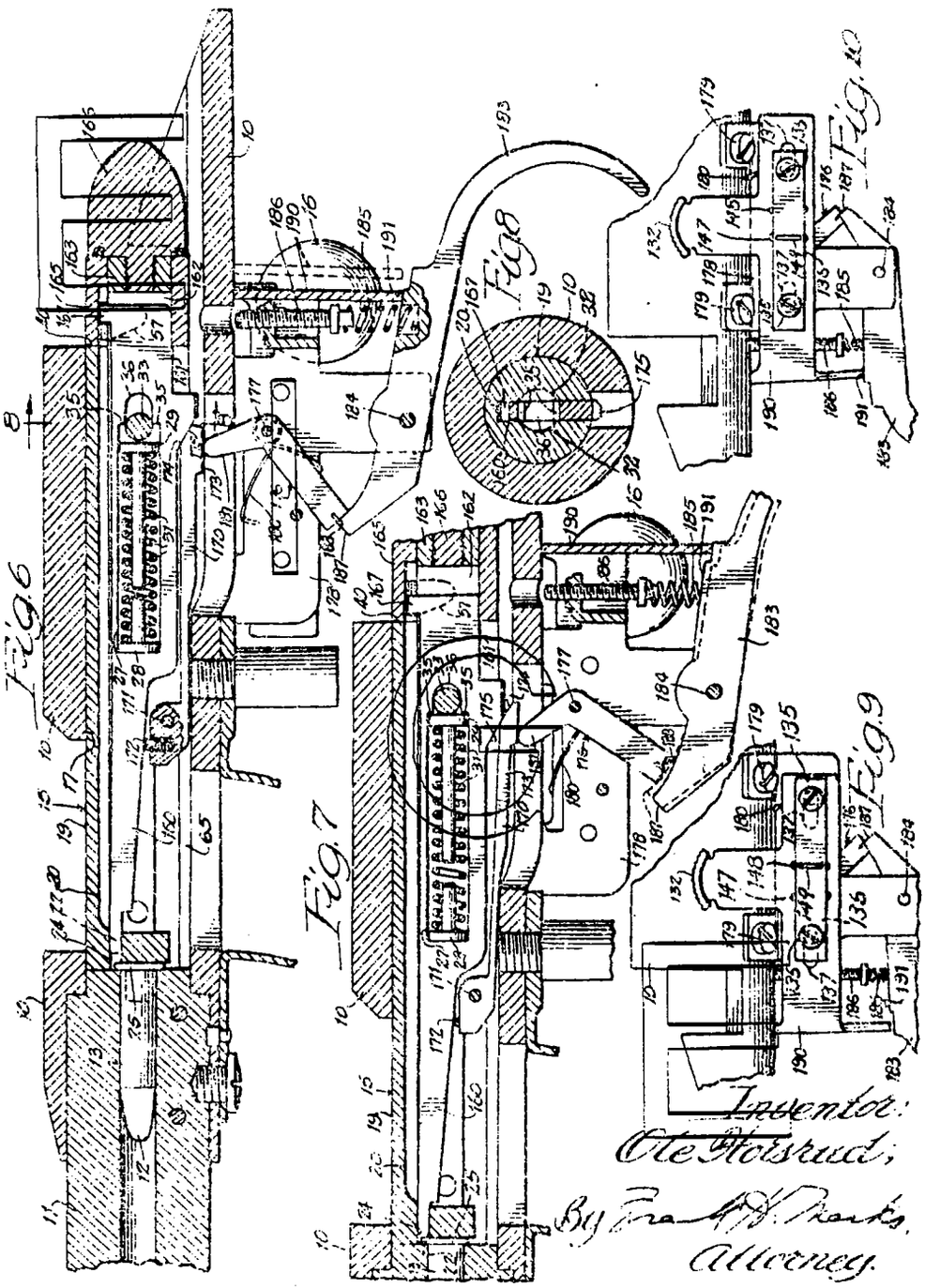

Inventor:
Ole Horsrud;
By Fra A. D. Parks,
Attorney.

CONFIDENTIAL-SUBJECT TO PROTECTIVE ORDER
KINZER V. REMINGTON

Patented Feb. 9, 1943 2,310,238

UNITED STATES PATENT OFFICE

2,310,238

FIREARM

Ole Horsrud, Fox River Grove, Ill., assignor to Sears, Roebuck and Co., Chicago, Ill., a corporation of New York

Application August 7, 1939, Serial No. 288,793

3 Claims. (Cl. 42—12)

This invention relates to firearms and is concerned more particularly with firing mechanism therefor.

Past firearm constructions have been more or less unsatisfactory because of excessive wear between certain parts of the control mechanism, resulting in impairment of accuracy and efficiency early in the life of the firearm. To overcome this defect and provide a firearm construction of enhanced reliability and of practically indefinite life is accordingly the essential object of my invention.

Another object is to provide a fire control mechanism in which substantially all of the wear occurs at places not vital to the accuracy and efficiency of the firing mechanism.

A further object is to provide a fire control mechanism in which wear at places vital to the efficiency of the mechanism is negligible.

It is a further object of the invention to provide an improved positive locking mechanism for a firearm.

It is another object to provide a firing mechanism such that a major part of the strain when the mechanism is cocked is taken by a relatively stationary member or members.

Another object is to provide a sear and striker assembly formed to minimize strain on the sear and sear control mechanism.

It is a further object to provide a firing mechanism in which friction between the sear and the striker is practically non-existent.

It is also an object to provide an improved adjustment for the trigger pressure.

A further object is to enable the sear to pass substantially instantaneously from fully obstructing position to fully unobstructing position.

Another object is to provide a striker and bolt construction affording minimum friction therebetween.

It is another object to enable the striker to be in full flight from its rearmost position.

Further objects and advantages of the invention will appear as the description proceeds.

The invention will be better understood upon reference to the foregoing description and the accompanying drawings, in which:

Fig. 1 is a fragmentary longitudinal sectional view of a firing mechanism embodying features of the invention, with the striker cocked.

Fig. 2 is a fragmentary elevation of a portion of the structure appearing in Fig. 1, but taken from the opposite side.

Fig. 3 is a view similar to Fig. 2 but with a portion removed to disclose certain details.

Fig. 4 is an enlarged sectional view taken substantially as indicated by the line 4—4 in Fig. 1.

Fig. 5 is a view similar to Fig. 1 but with the parts in the relations assumed when the striker fires the bullet.

Fig. 6 is similar to Fig. 1 but shows a modified firearm construction.

Fig. 7 is similar to Fig. 5 but shows the modified form.

Fig. 8 is a sectional view taken as indicated by the line 8—8 in Fig. 6.

Figs. 9 and 10 are fragmentary elevations showing the firearm unlocked and locked.

Referring now more particularly to the drawings, wherein the same reference characters designate the same parts, a receiver 10 is shown adjacent a barrel 11 adapted to receive a bullet 12 in a shell 13. The receiver carries a bolt 15 provided with the usual handle 18 by which the bolt is adapted to be turned and translated in the bore 17 of the receiver.

The bolt comprises a forward section 19 having an elongated narrow recess 20 housing a striker or hammer 21 adapted for limited longitudinal movement in said recess, said striker having a firing pin 22 which at all times is disposed in a hole 24 which renders the cap or primer 25 of the shell accessible to the pin. The striker 21 is of generally flat cross section conforming to the recess 20 and has a slot 27 for the accommodation of thrust bearings 28 and 29 between and about which a firing spring 31 is disposed, the sides of the recess 20 being enlarged as at 32 in Figs. 4 and 8 to accommodate said bearings and spring. A pin 33 mounted on the bolt 19 serves as a reaction member limiting the bearing 29 rearwardly. The rear end of the slot 20 provides shoulders 35 engageable with the bearing 29 and a recess 36 providing clearance for the pin 33 and having a wall engageable with the latter, thereby to limit the firing forward stroke of the striker.

In the form shown in Figs. 1 to 5, the bolt 16 has a rear peripheral shoulder 40 and an extension 41 of reduced diameter, said extension being diametrically slotted as at 42 in continuation of the recess 20 in the bolt. Rotatably and slidably fitted about the reduced extension 41 is a collar 45 to which the handle 16 is secured. The collar 45 may comprise rigidly connected outer and inner sleeves and is preferably slidably engageable with the shoulder 40. A retainer plug 49 releasably threaded at 50 within the rear end of the reduced portion 41 of the bolt is limited by said portion so that the collar 45 has sliding

CONFIDENTIAL-SUBJECT TO PROTECTIVE ORDER
KINZER V. REMINGTON

R2539633

engagement with the shoulder 53 on the plug, when the plug is threaded home. A friction spring ring 54 may be provided to take up play.

The collar 45 may have diametrically opposed slots 56 from which extend helical cam slots 57 as shown in Figs. 1 and 5. The striker 21 has a reduced rear extension or neck 59 projecting rearwardly into the reduced bolt portion 41 and disposed in the diametrical slot 42 thereof, and terminates rearwardly in cam follower lugs 61 adapted to project into the slots 57 of the collar 45. When the striker has fired and is thus in its foremost position, as shown in Fig. 5, the lugs 61 are disposed at the forward ends of the associated cam slots 57 and are so arranged that rotation of the collar 45 in the proper direction will cause the forward walls of the cam slots 57 to force the firing pin 21 rearward against the action of the spring 31. When the handle 16 is pulled and swung from its down position (Fig. 5) to its uppermost position, it rotates the collar 45 to effect a rearward camming of the striker 21.

The receiver 10 may have a suitable catch (not shown) cooperating with the bolt 15 to prevent rotation of the forward section 19 thereof while permitting the bolt to move axially in the bore 17.

The receiver 10 has a longitudinal channel or keyway 65 adapted to receive a sear 66 pivoted at its forward end as shown at 67 to the forward section 19 of the bolt. The sear extends rearwardly from the pivot 67 and has an inclined rearwardly facing abutment or shoulder 70 engageable with a forwardly facing abutment or shoulder 71 on the striker 21. These shoulders are adapted to be interengaged when the striker is in its rearmost or cocked position. At such time, the shoulder 70 on the sear 66 is adapted to obstruct the forward movement of the striker 21 and thereby prevent firing. The inclination of the surfaces 70 and 71 is such that, at the moment the sear is released, as will appear, the spring 31 will exert a force which, acting through the shoulder 71 on the striker, will cam the sear downward out of obstructing position and will cause the striker to fire. The inclination of said shoulders, moreover, is such that, while the sear is supported in obstructing position, substantially less than the full force of the spring 31 is communicated to the sear pivot pin 67, so that said pin is subjected to minimum stress consistent with correct design of the sear supporting mechanism, as will appear.

For controlling the position of the sear 66, I provide a bell crank lever dog 75 pivoted as at 76 on side plates of a bracket 77 or other suitable means mounted preferably on the receiver 10 as at 78 and elsewhere. The dog 75 has an upwardly extending arm 80 engageable with the bottom side 81 of the sear 66 when the shoulders 70 and 71 are interengaged, and is adapted to be rigidly held there by a latch 83 engaged in the recess 84 in the other arm 85 of the lever. The latch 83 is formed on a trigger 87 pivotally mounted as at 88 on a depending extension 89 on the bracket 77, and is urged upward by spring means 91. With the parts thus arranged, it is evident that firing of the striker pin 21 is positively prevented.

The bracket 77 may be U-shaped, providing a bight 95 disposed rearwardly of the dog 75 and having a bearing opening 96 through which a pin 97 pivotally connected as at 98 to the arm 85 of the dog 75 is slidably extended. A spring 100 disposed about the pin [illegible] engaged with a shoulder 101 on the pin and with the bight 95 urges the dog to swing clockwise as seen in Figs. 1 and 5, so as to urge the dog arm 80 toward the bottom surface 81 of the sear 66. Compared to the spring 31, the pressure of the spring 100 is very light, so that it offers negligible resistance to the action of the spring 31 in thrusting the sear 66 downward when the latch 83 is released.

When the dog 75 is in locked position, as shown in Fig. 1, its contact point 103 is so disposed as to turn about the pivot 76 in response to the downward thrust resulting from the pressure of the spring 31 when the latch 83 is out of the recess 84.

Fig. 5 shows the relation of the parts when the firearm has been fired. To cock the firearm, the handle 16 is turned through a suitable angle in the receiver 10, say about 90°, thereby turning the collar 45 and the forward walls of the cam slots 57 to engage the lugs 61 and cam the striker rearwardly against the resistance of the spring 31. The forward ends of the lugs may be rounded as at 102 to minimize friction. The spring 31 at this time is pressing the latch 83 upward, and the spring 100 is urging the bell crank lever arm 80 toward the sear 66 and thus pressing the sear upward into engagement with the striker adjacent the shoulder 71 thereof. As the upward rotation of the handle 16 moves the striker rearward, the spring 100 moves the sear 66 upward to effect engagement between the shoulders 70 and 71, the arm 85 of the dog 75 also moving to bring the recess 84 thereof closer to the end of the latch 83. When the striker is fully withdrawn by the cam action, the spring 100 causes the shoulders 70 and 71 to be fully interengaged and the contact end 103 of the dog 75 to engage the bottom 81 of the sear 66, and enables the spring 91 to slip the latch 83 into the recess 84, all as shown in Fig. 1. At such time, with the handle 16 in its upper position, the forward walls of the cam slots 57 are engaged with the lugs 61 so as to permit the proper positioning of the sear and control mechanism therefor as just described. Now when the handle 16 is depressed, the sear 66, being locked by the dog 75 and trigger 87 in the position shown in Fig. 1, positively prevents the striker from moving forward. The downward movement of the handle 16 is limited by an abutment (not shown) in the receiver 10, and when the handle is brought to rest in its down position, the lugs 61 are alined with the slots 56 in the collar 45, so that the forward walls of the cam slots 57 offer no obstruction to the firing stroke of the firing pin. Now the firearm is fully cocked, and, to fire the same, it is necessary merely to pull the trigger 87.

The rear part of the keyway 65 is formed to accommodate the sear 66 so that the entire bolt may be removed if desired.

It will be observed that the line of action of the force on the dog 75 in response to the pressure of the spring 31 is adjacent the axis of the pivot pin 76, so that the component in that direction of the force of the shoulder 71 on the shoulder 70 is resisted very largely by the pin 76 and the bracket 77 and accordingly by the receiver 10. Only a relatively small part of the force is taken by the latch 83 and transmitted thereby to the trigger pivot pin 88. In the movement of the trigger, there is friction between the latch 83 and the dog 75, and this friction, being relatively light, will not cause appreciable wear of the surfaces involved. Also, by virtue of the

CONFIDENTIAL-SUBJECT TO PROTECTIVE ORDER
KINZER V. REMINGTON

R2539634

fact that the latch 83 is subjected to a relatively light force, the trigger pivot pin 88 likewise is subjected to negligible wear. Moreover, even if excessive wear of the frictionally engaged surfaces of the dog 75 and latch 83 or of the trigger pivot pin 88 could take place, the sear 66 could be depressed to only a negligible extent by the spring 31 during the movement of the latch 83 to a position clear of the dog 75, so that the resulting wear on the surfaces 70 and 71 would be negligible. It is thus apparent that the operation of the trigger results in substantially no wear to the surfaces affecting the proper operation of the striker. When the trigger is pulled clear of the dog 75, the passage of the shoulder 71 over the shoulder 70 is practically instantaneous, the sear 66 offering substantially no resistance to such movement. Consequently, the friction between the surfaces 70 and 71 is practically nonexistent and, as a result, the surfaces will remain in their original condition indefinitely, thus insuring the same accurate firing process throughout the life of the firearm.

The trigger has a bearing surface 110 extending rearwardly and below the bight 95, and has a recess 111 receiving the lower end of a spring 112. Received in the upper end of the spring is a projection 114 formed on the bracket bight 95. A screw 117 carried by the trigger is adapted to engage the spring 112 and to adjust the pressure thereof. The spring 112 is relatively light, compared to the spring 31 and accordingly, adjustment of the screw 117 will effect slight changes in the spring pressure on the trigger.

The bracket 77 may be fastened at the rear thereof to the receiver 10 in any suitable manner, as by a screw 120, and preferably has a slot 121 through which a keeper or latch 122, formed on a safety locking member 123, projects. When the firearm is cocked, as shown in Fig. 1, the lock member may be in inoperative position, as shown in Fig. 1, or it may be slid into operative position as shown by the dotted lines in Fig. 1. In this position, the keeper is substantially engaged with the bottom side 81 of the sear while the bottom 125 of the locking member is substantially engaged with a shoulder 126 on the trigger. Thus, the locking member positively locks both the sear and the trigger against releasing movement so that it is impossible for the striker 21 to fire.

The locking member 123 preferably has a side plate 130 slidably engaged with a face 131 on the receiver 10 and has a knurled or otherwise roughened thumb-engaging projection or handle 132 to facilitate movement of the locking member. The locking member 123 is preferably removably mounted as by screws 135 extending through a plate 136 and through slots 137 formed in the portion 130 of the locking member, said screws being threaded into the receiver 10. The screws and slots determine the limits of movement of the locking member. In one of the limits, the locking member is in inoperative position as shown in Figs. 1, 2 and 3 in full lines, and, in the other limit, the locking member is in operative position, as shown in dotted lines in Fig. 1. The projection 132 is preferably on the side at which the handle 16 is located, for greater convenience.

In the operation of rotating the handle 16 to cam the striker rearward, the forward walls of the cam slots 57 exert a rotative force on the striker in the direction of turning of the handle. With the arrangement illustrated in Fig. 1, the upper left corner edge of the striker and the lower right corner edge of the striker, if sharp, might score the respective walls 140 and 141 of the recess 20 and would themselves become worn, with the result that the proper firing of the firearm might be seriously affected. The fit between the sides of the striker and the walls 140 and 141 of the recess 20 is preferably such as to allow substantially no more than free sliding movement of the striker. Since such a fit requires some clearance, it is obvious that if the corner edges referred to were sharp, there may be a biting knife-edge-to-surface friction contact possibly resulting in the deleterious wear above referred to. To obviate such results, I have rounded said corner edges as shown at 143 and 144, in Fig. 4 thereby providing for engagement between a flat wall and a relatively blunt curved surface as shown, so that friction will be minimized.

The sliding portion 130 of the lock member 123 may be formed with openings or indentations 147 and 148, and the cover plate 136 with a spring depression or detent 149 adapted to snap in the recess 148 when the locking member 123 is in inoperative position and in the recess 147 when the locking member is in locked position.

In the form of the invention appearing in Figs. 6 to 10, the striker or hammer 150 has a neck 151 slidably fitted in the slot 152 in the reduced rear end 153 of the bolt 15. A sleeve 155 journaled on said end 153 is slidably engaged with the bolt shoulder 40 and a cap 156 is threaded in said end. The sleeve has a cam slot 57 cooperative with a lug 157 on the striker neck 151 in the manner set forth above in connection with the lugs 51, so that when the ball handle 16 is raised the wall of said cam slot 57 in Fig. 6, retracts the striker against the resistance of the firing spring 31 to cocked position.

The sear 170 is pivoted to the receiver 10 at 171 and carries a spring 172 forward of the pivot, said spring bearing against the under side of the striker so as to at all times tend to turn the sear anti-clockwise. The rear end portion 173 of the sear has an inclined surface 174 complemental to an inclined surface 175 on the striker. A dog 176 pivoted at 177 to a bracket 178 mounted as at 179 on the receiver is constantly urged by a spring 180 to turn clockwise, an arm 181 of the dog being engageable with the rear end 173 of the sear to press the sear surface 174 against the striker surface 175.

A trigger 183 pivoted at 184 to the bracket 178 is urged clockwise by a spring 185 compressed between the trigger and an anchoring member 186 carried by the bracket and adjustable by hand or a suitable tool. Thus, the other end 187 of the trigger automatically snaps into engagement with the shoulder 188 of the dog 176, as shown in Figs. 6, 9 and 10, upon retraction of the striker as aforesaid.

The safety lock means of Figs. 6 to 10 differs from that previously described in that the slide 190 abuts the receiver 10 and not the sear 170. The mechanism is locked when the slide 190 engages the surface 191 of the trigger as shown in full lines in Figs. 6 and 10 and is unlocked when the slide is disposed rearwardly of said surface as shown in full lines in Figs. 7 and 9 and in dotted lines in Fig. 6.

It is evident from the foregoing that I have provided with a minimum of parts a construction which enables the firing spring 31 to exert its full force in driving the striker from its ex-

CONFIDENTIAL-SUBJECT TO PROTECTIVE ORDER
KINZER V. REMINGTON

treme rear position to its firing position without interference from the sear 66 or other means, so that the firing pin has acquired maximum momentum possible upon its striking the shell cap 25. The parts are easily accessible, the stresses resulting from maintaining the striker in cocked position are taken largely by the gun frame so as to substantially relieve the trigger, and wear between the surfaces which might seriously affect the efficiency of operation is negligible. A simple yet effective double acting lock is provided, and minute adjustments in the pressure on the trigger are possible. The receiver 10 may be provided with an opening (Figs. 1, 5, 6 and 7) through which a cartridge clip may be fed and used shells released.

The elements of the firing and fire control mechanism may be of steel or other metal or alloy of sufficient hardness to withstand the conditions of use of the firearm, as is understood by those skilled in the art.

Various changes coming within the spirit of the invention may be suggested by those skilled in the art, and hence I do not wish to be limited to the specific forms shown or uses mentioned.

I claim:

1. In a mechanism for maintaining a firing pin in cocked position, a receiver, a bolt therein, a striker in said bolt and having a forwardly facing shoulder, a sear mounted on said bolt and having a rearwardly facing shoulder engageable with the aforesaid shoulder when the striker is in cocked position, a lever pivotally supported from said receiver and engaged with said sear, a trigger supported from said receiver and holding said lever in engagement with said sear, and a spring for firing said striker, said spring being inoperative while said trigger holds said lever engaged with said sear, said trigger being disengageable from said lever to render said firing spring operative, at least one of said shoulders being inclined upwardly and forwardly to enable said striker to cam said shoulders apart when said spring becomes operative.

2. A firearm comprising a bolt, a striker therein, a sear movable into and out of a position obstructing firing movement of said striker, said sear being movable by said striker out of obstructing position, means pivotally mounting said sear on said bolt, said means being disposed in advance of the place of engagement, releasable means for maintaining said sear in obstructing position, said sear extending longitudinally between the place of engagement and its pivot, so that the forward component of the force of the spring is withstood by said bolt, the releasable means comprising a member engaging said sear opposite the place of interengagement between said striker and sear to preclude bending of said sear by said striker.

3. A firearm, comprising a receiver, a bolt therein, a striker in said bolt, a sear pivoted on said bolt and movable into and out of a position obstructing firing movement of said striker, a spring for propelling said striker, said sear being movable by said striker out of obstructing position, means including a lever pivoted on said receiver for maintaining said sear in obstructing position, the sear pivot being disposed to transmit the forward component of the force of the spring-pressed striker on said sear to said bolt, said lever engaging said sear at such a point that when the sear is swung out of obstructing position, it will swing the lever, and means releasably retaining said lever in position to maintain the sear in obstructing relation to the striker, the lever pivot being disposed to withstand a major portion of the downward component of said striker on said sear.

OLE HORSRUD.

CONFIDENTIAL-SUBJECT TO PROTECTIVE ORDER
KINZER V. REMINGTON

R2539636

F I R E A R M S P A T E N T S

PATENT NO. 4,305,218 ISSUED Dec. 15, 1981

TITLE SAFETY MECHANISM FOR A FIREARM CLASS 42/70

CIRCULATION LIST

~~C. B. WORKMAN, ILION~~

Fred MARTIN

~~J. S. MARTIN, ILION~~

R. B. HURLEY, ILION

J. W. BROOKS, ILION

T. L. CAPELETTI, ILION

J. W. BOWER, ILION

J. P. GLAS, ADM. BLDG.

PATENT DIV., BPT.

COMMENTS

REMINGTON ARMS CO.
RECEIVED
FEB 17 1982
FIREARMS RESEARCH DIVISION

WLE/dt

2/16/82

CONFIDENTIAL-SUBJECT TO PROTECTIVE ORDER
KINZER V. REMINGTON

United States Patent [19]

Godsey

[11] **4,305,218**

[45] **Dec. 15, 1981**

[54] **SAFETY MECHANISM FOR A FIREARM**

[76] Inventor: **Floyd E. Godsey**, Box 154, Willow Creek, Calif. 95573

[21] Appl. No.: **126,682**

[22] Filed: **Mar. 3, 1980**

[51] **Int. Cl.**[3] **F41C 17/04**

[52] **U.S. Cl.** ..... **42/70 F; 42/70 R**

[58] **Field of Search** ..... 42/70 F, 70 R, 69 A

[56] **References Cited**

U.S. PATENT DOCUMENTS

2,484,977	10/1949	Wilcox	42/70 F
2,514,981	7/1950	Walker et al.	42/70 R
2,824,402	2/1958	Fischer	42/70 R
3,601,918	8/1971	Keppeler	42/70 F

Primary Examiner—Charles T. Jordan
Attorney, Agent, or Firm—Chernoff & Vilhauer

[57] **ABSTRACT**

A safety device for a bolt action firearm has a laterally extending lock pin which is movable laterally to engage a recess in the cocking lug of the striker to prevent the striker from moving forward despite sear release by the trigger mechanism. An operating lever is movable rearward from a forward position in which the firearm may be discharged, rotating a helical cam which moves the lock pin laterally into the recess in the cocking lug. When the lever is moved further rearward, a cam on the operating lever pivots a blade upward into a groove in the bolt to prevent rotation of the bolt.

13 Claims, 9 Drawing Figures

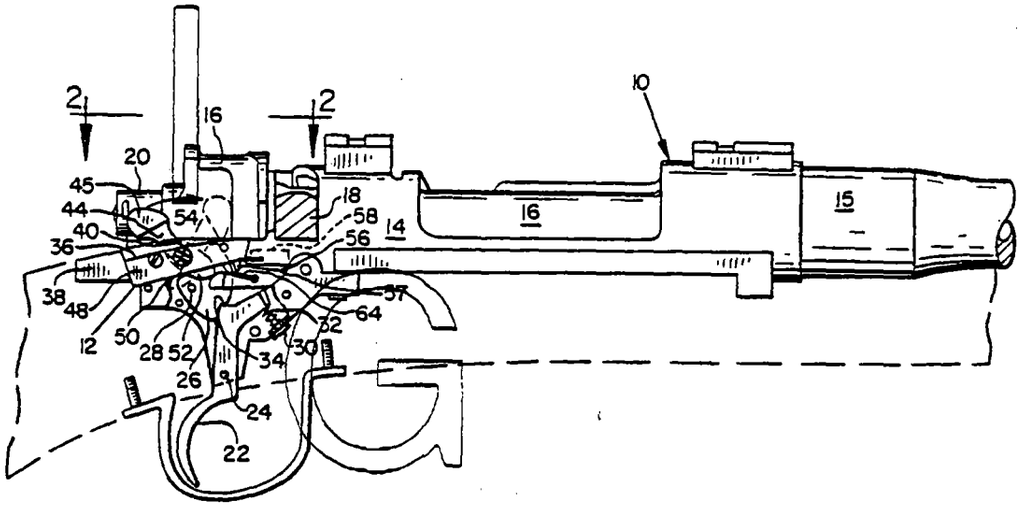

REM 0030411

CONFIDENTIAL-SUBJECT TO PROTECTIVE ORDER
KINZER V. REMINGTON

R2539638

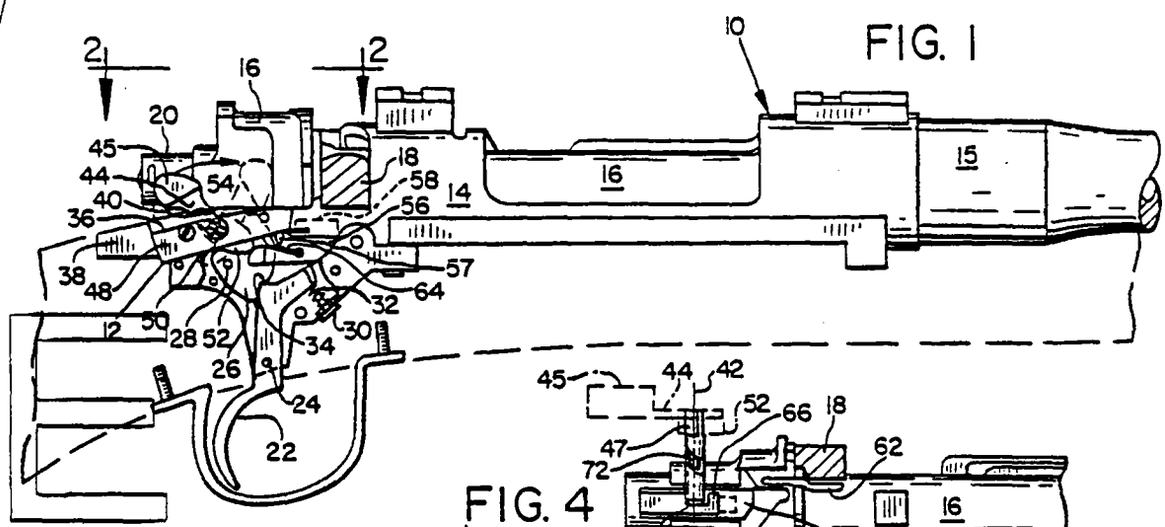

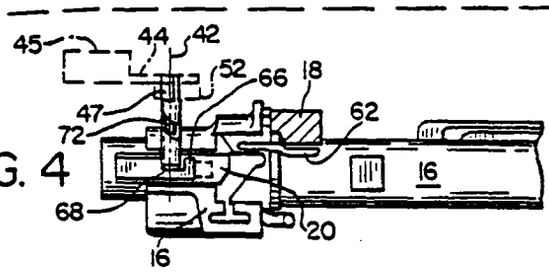

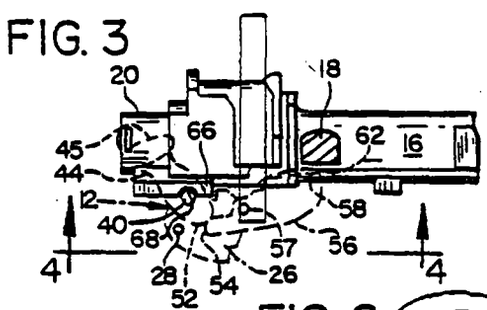

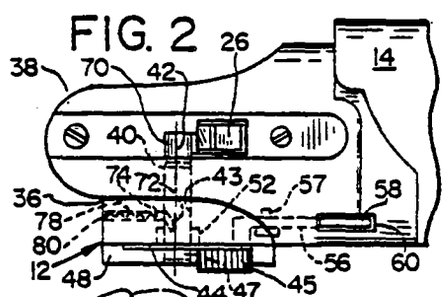

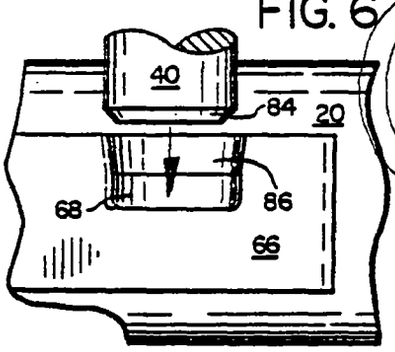

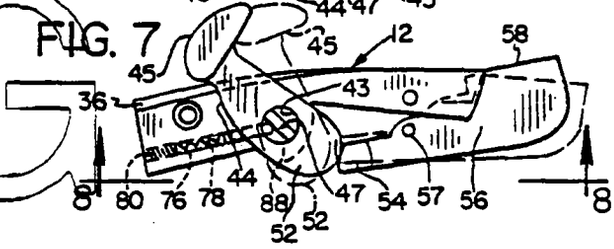

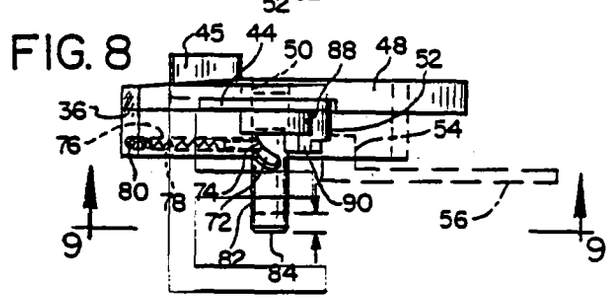

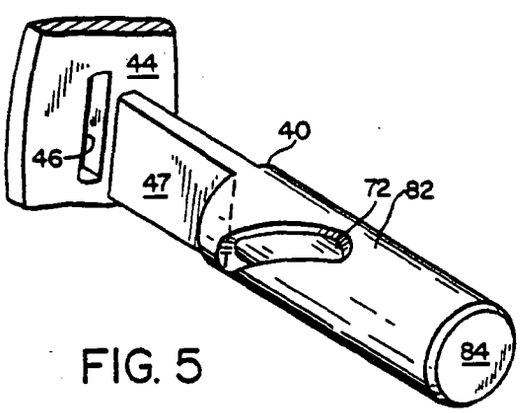

FIG. 5

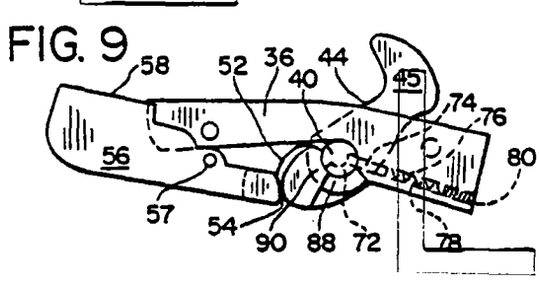

CONFIDENTIAL-SUBJECT TO PROTECTIVE ORDER
KINZER V. REMINGTON

SAFETY MECHANISM FOR A FIREARM

BACKGROUND OF THE INVENTION

The present invention relates to improvements in firearms and particularly to an improved safety mechanism for bolt action firearms.

A long-standing problem in bolt action firearms is that when the bolt is rotated to the unlocked position in opening the breech, the firearm may accidentally discharge a cartridge contained in its chamber. This occurs because many safety mechanisms for bolt action firearms must be placed in an "off-safe," or firing, position to permit the bolt to be raised from its closed and locked position.

Particularly when firearms have been designed or modified for hunting use, the trigger mechanism is often adjusted to require only a very small amount of movement to release the striker which propels the firing pin into the primer of the cartridge. While in most military rifles an appreciable amount of slack in the trigger mechanism must be taken up before the striker is released, such firearms when modified for hunting use ordinarily do not have such slack in the trigger mechanism, and are subject to accidental discharge as a result.

Some bolt action firearms employ a safety mechanism attached to the rear end of the breech bolt. Typically, a knob or small lever of such a safety mechanism must be moved to engage or disengage the safety, a movement requiring the shooter to release his grip on the stock of the firearm.

Most previously known safety mechanisms for bolt action firearms are either of the bolt mounted type just described, or else operate by blocking a portion of the trigger or sear mechanism, preventing the trigger from being moved sufficiently for the sear to release the striker. Because of the short distance which the trigger must move to discharge a cartridge in a firearm designed for hunting use, however, even a small amount of wear in a safety mechanism of this type may be sufficient to allow an accidental discharge of the firearm, upon rotation of the bolt to open the breech, or should the trigger snap on an object as the firearm is being carried.

Customarily, in the case of known firearms which are provided with a lock for securing the bolt against rotation, the bolt lock is coupled with the safety mechanism in such a way that when the safety mechanism is set on "safe," the bolt is prevented from opening. In such firearms, then, the bolt and firing mechanism are both locked or else both capable of actuation. As a result, there is a definite uncertainty while handling the firearm, because a shot can be accidentally discharged as the bolt is rotated.

What is needed, therefore, is a safety mechanism for a bolt action firearm which can secure the bolt in its locked position, preventing opening of the bolt and also preventing actuation of the firearm, and which selectively permits rotation of the bolt from its locked position while still preventing discharge of a cartridge. Additionally, such a safety mechanism should be handily operable by the shooter without the need to remove his hand from its normal position on the stock of the firearm.

SUMMARY OF THE INVENTION

The present invention overcomes the aforementioned shortcomings and disadvantages of previously known

safety mechanisms by providing a three-position safety mechanism mounted on the tang of the receiver of the bolt action firearm, where it is thumb-operable. In one "safe" position the safety mechanism of the present invention prevents discharge of the firearm and also prevents rotation of the bolt, while in another "safe" position it prevents discharge of the firearm, yet allows rotation of the bolt from its closed-and-locked position to a position in which the safety mechanism of the firearm prevents the firearm from discharging the cartridge. In a third, or "off-safe" position the safety mechanism permits discharge of the weapon.

It is therefore a primary objective of the present invention to provide an improved safety mechanism for use in bolt action firearms.

It is another important objective of the present invention to provide a safety mechanism for bolt action firearms which cannot be overcome by pulling the trigger of such firearm.

It is yet another important objective of the present invention to provide a safety mechanism which prevents discharge of the firearm independently of the trigger and sear mechanism.

It is yet a further objective of the present invention to provide a safety mechanism which prevents inadvertent rotation of the breech bolt of a bolt action firearm.

It is a still further objective of the present invention to provide a safety mechanism which is operable without the need for the shooter to move his hand from its normal position gripping the stock of the firearm.

The present invention provides a thumb-operated three-position safety mechanism which is located conveniently on the tang of the receiver portion of the firearm. It is applicable to nearly any bolt action firearm having a striker located at the rear of the bolt, and having a cocking lug for engaging the sear mechanism on the bottom of the striker.

The safety mechanism of the invention comprises a lock pin which extends laterally toward the striker through a bore provided in the tang of the receiver, and which is laterally movable by action of a cam to engage and hold the striker, preventing discharge of the firearm. Another cam is used to move a blade into a groove in the breech bolt of the firearm to secure the bolt in a closed position.

In a preferred embodiment, one end of the lock pin fits into an opening in a safety mechanism operating lever which extends upward from the tang of the receiver to a position where a shooter can easily move the lever with his thumb. Movement of the lever forward or rearward rotates the lock pin, and a helical cam groove included in the lock pin moves it laterally of the firearm as it is rotated. When the firearm is cocked, the lock pin can be moved in this manner into a recess which is provided in the cocking lug. As the lock pin extends into the recess in the cocking lug, it engages a conical inner surface of the recess in the cocking lug, forcing the cocking lug, and thereby also the striker, to move a slight distance rearward within the receiver With the lock pin engaged in the recess in the cocking lug, the sear lever is free to move away from and to return to its position locking the cocking lug, allowing operation of the trigger mechanism while the safety mechanism is in one of the two "safe" positions. The lock pin of the safety mechanism of the present invention thus holds the striker securely in a rearward position independently of the trigger mechanism, prevent-

CONFIDENTIAL-SUBJECT TO PROTECTIVE ORDER
KINZER V. REMINGTON

ing discharge of the firearm despite operation of the trigger mechanism and despite jarring which might otherwise cause an accidental discharge.

Further movement of the operating lever of the safety mechanism, in the direction required to engage the lock pin in the recess of the cocking lug, moves a cam attached to the operating lever into contact with a follower located on one end of a blade which is pivotably mounted on the receiver of the firearm. The cam pivots the blade about an axis generally perpendicular to the blade, raising an edge of the blade through a slot provided in the receiver of the firearm into a groove provided in the bolt of the firearm, thereby preventing the bolt from rotating away from its closed-and-locked position closing the breech.

It is, therefore, a principal feature of the invention that it includes a laterally-extending lock pin which is movable laterally into locking engagement in a recess provided in a part of the striker of a bolt action firearm, to positively engage and retain the striker, preventing discharge of the firearm.

It is another important feature of safety mechanism of the present invention that the lock pin positively moves the striker rearward in the receiver of the firearm as the lock pin moves into the recess provided in the cocking lug.

It is another important feature of the present invention that when the operating lever of the safety mechanism is in an intermediate position, the bolt may be rotated, but the cocking lug is held securely, preventing discharge of the firearm.

It is a primary advantage of the present invention that it provides greater safety then previously known safety mechanisms for bolt action firearms, since it locks the striker independently of the trigger mechanism of the firearm.

It is another primary advantage of the present invention that it is more convenient to operate than a bolt-mounted safety mechanism.

It is a further advantage of the present invention that it is less susceptible to wear than safety mechanisms which depend upon lockage of the trigger mechanism, particularly in firearms requiring only a slight movement of the trigger to discharge the firearm.

The foregoing and other objectives, features and advantages of the present invention will be more readily understood upon consideration of the following detailed description of the invention taken in conjunction with the accompanying drawings.

BRIEF DESCRIPTION OF THE DRAWINGS

FIG. 1 is a fragmentary partially cut away side elevational view of a rifle including an exemplary safety mechanism embodying the present invention.

FIG. 2 is a top view of the rear portion of the receiver of the rifle shown in FIG. 1, with the bolt removed.

FIG. 3 is a partially sectional side elevational view of a portion of the bolt of the rifle shown in FIG. 1, showing the lock pin and the blade of the safety mechanism shown in FIG. 1 engaged therein.

FIG. 4 is a bottom view, taken along line 4—4 of FIG. 3, of a portion of the bolt shown in FIG. 3, with the lock pin of the safety mechanism of the invention engaged therein.

FIG. 5 is a pictorial view, at an enlarged scale, of the lock pin of the safety mechanism shown in FIG. 1.

FIG. 6 is a bottom view, at an enlarged scale, of a detail of the bolt of the rifle shown in FIG. 1, showing the relationship between the lock pin of the safety mechanism and the cocking lug of the bolt.

FIG. 7 is a right side elevational view, at an enlarged scale, of the safety mechanism shown in FIG. 1.

FIG. 8 is a bottom view of the safety mechanism shown in FIG. 1, taken along line 8—8 of FIG. 7.

FIG. 9 is a left side elevational view of the safety mechanism shown in FIG. 1, taken along line 9—9 of FIG. 8.

DETAILED DESCRIPTION OF THE INVENTION

A bolt action rifle 10, equipped with a safety mechanism 12 which is a preferred embodiment of the present invention, is shown in FIG. 1. The rifle 10 comprises a receiver 14 having a barrel 15 attached at its forward end. A breech bolt 16 is operatively mounted in the receiver 14 to block the breech of the barrel 15. A bolt handle 18 of the breech bolt 16 is shown (partially cut away for clarity) in a forward-and-down, closed-and-locked position, and a striker 20 carried by the bolt 16, is in its cocked position, in which it is held rearward with respect to the bolt 16 against the force of a striker spring (not shown).

The trigger mechanism of the rifle comprises a trigger 22, pivotably mounted on a trigger pivot pin 24, and a sear lever 26 mounted on a sear pivot pin 28. A forward end of the trigger 22 is supported by a trigger adjusting screw 30 and a trigger spring 32, while a sear 34 is provided on an upper portion of the trigger 22 to releasably hold the sear lever 26 in a position interfering with the forward movement of the striker 20 when the firearm is cocked.

Referring now also to FIGS. 2-5, the safety mechanism of the present invention may be seen to comprise a backing piece 36 fitted against one side of the tang 38 of the receiver 14 of the rifle 10, and a lock pin 40, having a longitudinal axis 42, which extends laterally through a bore 43 defined in the backing piece 36 and the tang 38 of the receiver 14. An operating lever extends upward above the backing piece 38 and has a head 45 shaped to be conveniently moved by thumb pressure. An elongated opening 46, through which an outer end portion 47 of the lock pin 40 extends, is defined in the operating lever 44. A cover plate 48 is secured to the backing piece to limit movement of the operating lever 44, while a hole 50 defined in the cover plate 48 and located in alignment with the elongated opening 46 permits the lock pin 40 to move laterally and also permits observation of the position of the lock pin 40. The operating lever 44 may be moved forward, rotating about a pivot axis coincident with the central longitudinal axis 42 of the lock pin 40, from the position shown in solid line in FIG. 1, in which the safety mechanism of the invention is in a "safe" position, to the "off-safe" position shown in broken line, which permits the rifle 10 to be discharged.

A cam 52, is located on the lower portion of the operating lever 44, where it engages a follower 54 connected to a blade 56. The blade 56 is pivotably secured to the receiver 14 by, for example, a blade mounting screw 57 extending laterally through the blade into the receiver 14. An edge 58 of the blade 56 extends upward through a slot 60 in the receiver, engaging a groove 62 defined in the bottom of the bolt 16, near the bolt handle 18, preventing the bolt 16 from rotating out of its forward-and-down locked position. A blade spring 64 normally retains the edge 58 in a lowered position,

CONFIDENTIAL-SUBJECT TO PROTECTIVE ORDER
KINZER V. REMINGTON

R2539641

F I R E A R M S P A T E N T S

PATENT NO. 4,305,218 ISSUED Dec. 15, 1981

TITLE SAFETY MECHANISM FOR A FIREARM CLASS 42/70

CIRCULATION LIST

~~C. B. WORKMAN, ILION~~

Fred MARTIN

~~J. S. MARTIN, ILION~~ J.S. Martin

~~R. HURLEY, ILION~~

J. W. BROOKS, ~~ILION~~

~~T. L. CAPELETTI, ILION~~ 26

~~J. W. BOWER, ILION~~

J. P. GLAS, ADM. BLDG.

PATENT DIV., BPT.

COMMENTS

REMINGTON ARMS CO.
RECEIVED
FEB 17 1982
FIREARMS RESEARCH DIVISION

WLE/dt

2/16/82

CONFIDENTIAL-SUBJECT TO PROTECTIVE ORDER
KINZER V. REMINGTON

United States Patent [19]

Godsey

[11] **4,305,218**

[45] **Dec. 15, 1981**

[54] **SAFETY MECHANISM FOR A FIREARM**

[76] Inventor: **Floyd E. Godsey**, Box 154, Willow Creek, Calif. 95573

[21] Appl. No.: **126,682**

[22] Filed: **Mar. 3, 1980**

[51] **Int. Cl.**[3] **F41C 17/04**

[52] **U.S. Cl.** ..... **42/70 F**; 42/70 R

[58] **Field of Search** ..... 42/70 F, 70 R, 69 A

[56] **References Cited**

U.S. PATENT DOCUMENTS

2,484,977	10/1949	Wilcox	42/70 F
2,514,981	7/1950	Walker et al.	42/70 R
2,824,402	2/1958	Fischer	42/70 R
3,601,918	8/1971	Keppeler	42/70 F

Primary Examiner—Charles T. Jordan

Attorney, Agent, or Firm—Chernoff & Vilhauer

[57] **ABSTRACT**

A safety device for a bolt action firearm has a laterally extending lock pin which is movable laterally to engage a recess in the cocking lug of the striker to prevent the striker from moving forward despite sear release by the trigger mechanism. An operating lever is movable rearward from a forward position in which the firearm may be discharged, rotating a helical cam which moves the lock pin laterally into the recess in the cocking lug. When the lever is moved further rearward, a cam on the operating lever pivots a blade upward into a groove in the bolt to prevent rotation of the bolt.

13 Claims, 9 Drawing Figures

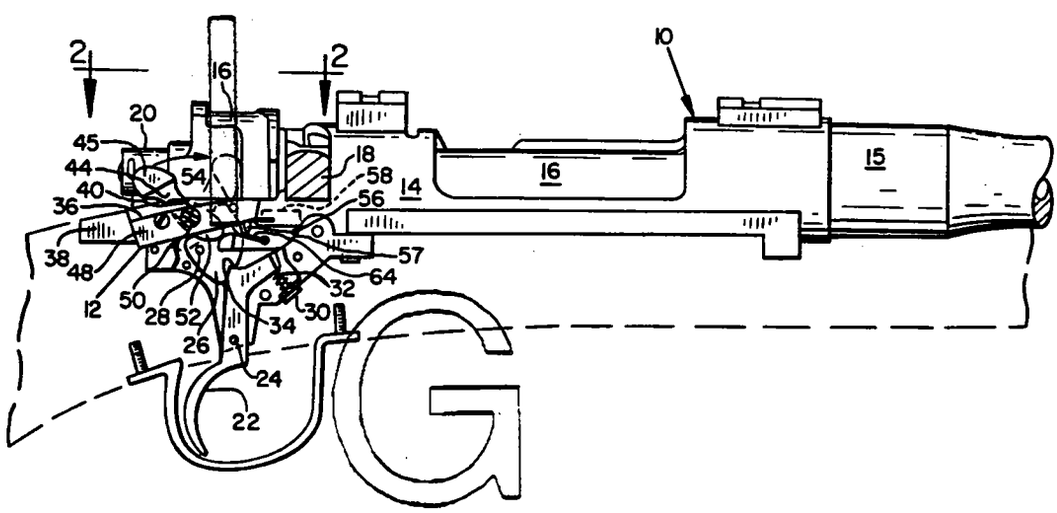

CONFIDENTIAL-SUBJECT TO PROTECTIVE ORDER
KINZER V. REMINGTON

R2539643

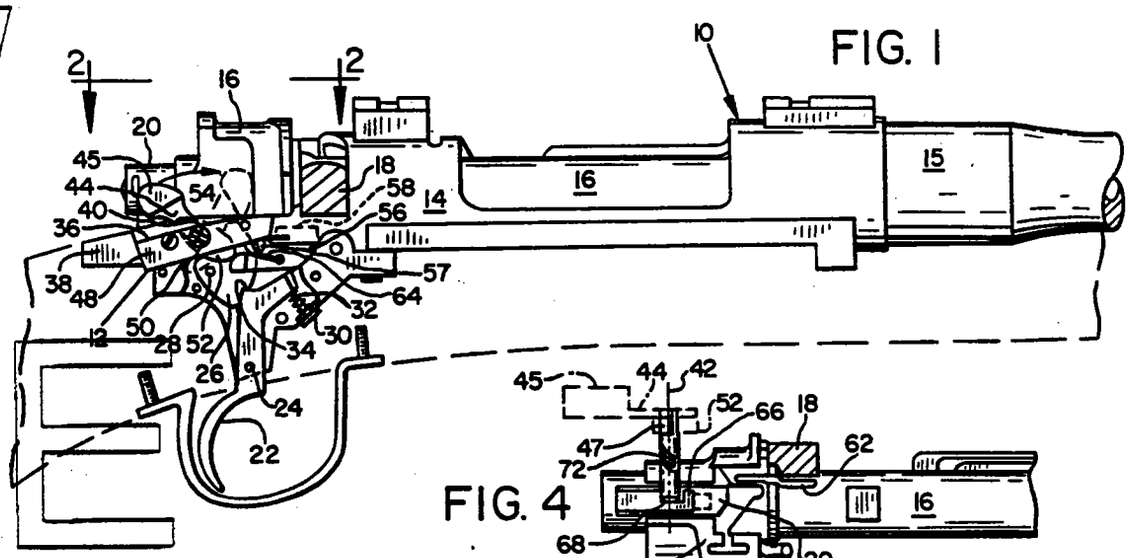

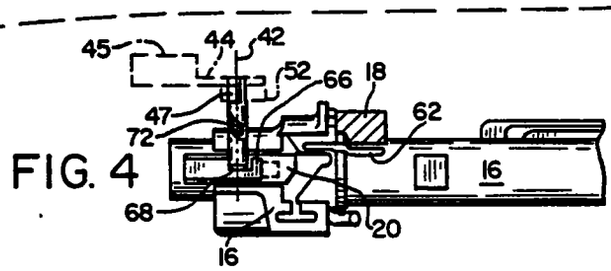

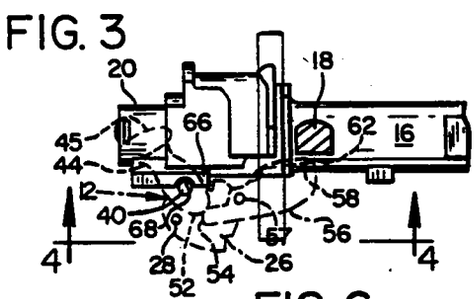

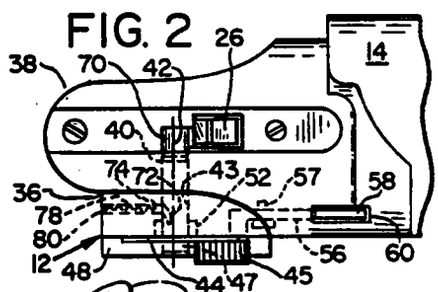

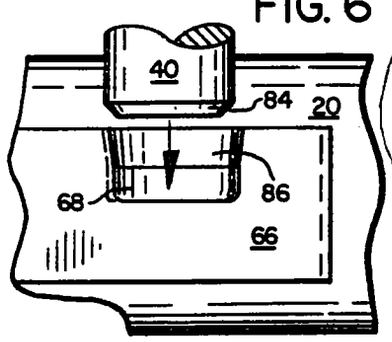

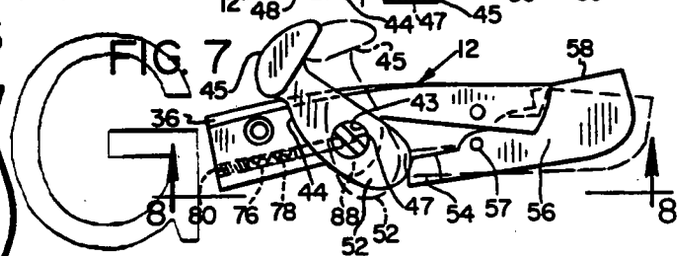

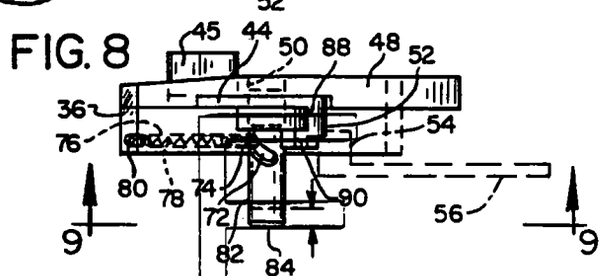

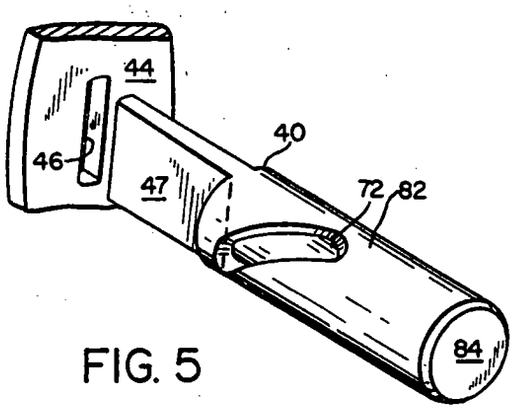

FIG. 5

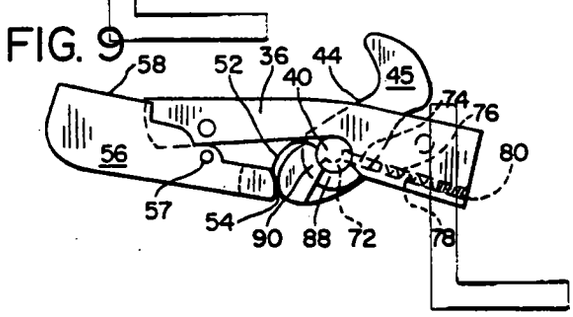

CONFIDENTIAL-SUBJECT TO PROTECTIVE ORDER
KINZER V. REMINGTON

SAFETY MECHANISM FOR A FIREARM

BACKGROUND OF THE INVENTION

The present invention relates to improvements in firearms and particularly to an improved safety mechanism for bolt action firearms.

A long-standing problem in bolt action firearms is that when the bolt is rotated to the unlocked position in opening the breech, the firearm may accidentally discharge a cartridge contained in its chamber. This occurs because many safety mechanisms for bolt action firearms must be placed in an "off-safe," or firing, position to permit the bolt to be raised from its closed and locked position.

Particularly when firearms have been designed or modified for hunting use, the trigger mechanism is often adjusted to require only a very small amount of movement to release the striker which propels the firing pin into the primer of the cartridge. While in most military rifles an appreciable amount of slack in the trigger mechanism must be taken up before the striker is released, such firearms when modified for hunting use ordinarily do not have such slack in the trigger mechanism, and are subject to accidental discharge as a result.

Some bolt action firearms employ a safety mechanism attached to the rear end of the breech bolt. Typically, a knob or small lever of such a safety mechanism must be moved to engage or disengage the safety, a movement requiring the shooter to release his grip on the stock of the firearm.

Most previously known safety mechanisms for bolt action firearms are either of the bolt mounted type just described, or else operate by blocking a portion of the trigger or sear mechanism, preventing the trigger from being moved sufficiently for the sear to release the striker. Because of the short distance which the trigger must move to discharge a cartridge in a firearm designed for hunting use, however, even a small amount of wear in a safety mechanism of this type may be sufficient to allow an accidental discharge of the firearm, upon rotation of the bolt to open the breech, or should the trigger snap on an object as the firearm is being carried.

Customarily, in the case of known firearms which are provided with a lock for securing the bolt against rotation, the bolt lock is coupled with the safety mechanism in such a way that when the safety mechanism is set on "safe," the bolt is prevented from opening. In such firearms, then, the bolt and firing mechanism are both locked or else both capable of actuation. As a result, there is a definite uncertainty while handling the firearm, because a shot can be accidentally discharged as the bolt is rotated.

What is needed, therefore, is a safety mechanism for a bolt action firearm which can secure the bolt in its locked position, preventing opening of the bolt and also preventing actuation of the firearm, and which selectively permits rotation of the bolt from its locked position while still preventing discharge of a cartridge. Additionally, such a safety mechanism should be handily operable by the shooter without the need to remove his hand from its normal position on the stock of the firearm.

SUMMARY OF THE INVENTION

The present invention overcomes the aforementioned shortcomings and disadvantages of previously known

safety mechanisms by providing a three-position safety mechanism mounted on the tang of the receiver of the bolt action firearm, where it is thumb-operable. In one "safe" position the safety mechanism of the present invention prevents discharge of the firearm and also prevents rotation of the bolt, while in another "safe" position it prevents discharge of the firearm, yet allows rotation of the bolt from its closed-and-locked position to a position in which the safety mechanism of the firearm prevents the firearm from discharging the cartridge. In a third, or "off-safe" position the safety mechanism permits discharge of the weapon.

It is therefore a primary objective of the present invention to provide an improved safety mechanism for use in bolt action firearms.

It is another important objective of the present invention to provide a safety mechanism for bolt action firearms which cannot be overcome by pulling the trigger of such firearm.

It is yet another important objective of the present invention to provide a safety mechanism which prevents discharge of the firearm independently of the trigger and sear mechanism.

It is yet a further objective of the present invention to provide a safety mechanism which prevents inadvertent rotation of the breech bolt of a bolt action firearm.

It is a still further objective of the present invention to provide a safety mechanism which is operable without the need for the shooter to move his hand from its normal position gripping the stock of the firearm.

The present invention provides a thumb-operated three-position safety mechanism which is located conveniently on the tang of the receiver portion of the firearm. It is applicable to nearly any bolt action firearm having a striker located at the rear of the bolt, and having a cocking lug for engaging the sear mechanism on the bottom of the striker.

The safety mechanism of the invention comprises a lock pin which extends laterally toward the striker through a bore provided in the tang of the receiver, and which is laterally movable by action of a cam to engage and hold the striker, preventing discharge of the firearm. Another cam is used to move a blade into a groove in the breech bolt of the firearm to secure the bolt in a closed position.

In a preferred embodiment, one end of the lock pin fits into an opening in a safety mechanism operating lever which extends upward from the tang of the receiver to a position where a shooter can easily move the lever with his thumb. Movement of the lever forward or rearward rotates the lock pin, and a helical cam groove included in the lock pin moves it laterally of the firearm as it is rotated. When the firearm is cocked, the lock pin can be moved in this manner into a recess which is provided in the cocking lug. As the lock pin extends into the recess in the cocking lug, it engages a conical inner surface of the recess in the cocking lug, forcing the cocking lug, and thereby also the striker, to move a slight distance rearward within the receiver. With the lock pin engaged in the recess in the cocking lug, the sear lever is free to move away from and to return to its position locking the cocking lug, allowing operation of the trigger mechanism while the safety mechanism is in one of the two "safe" positions. The lock pin of the safety mechanism of the present invention thus holds the striker securely in a rearward position independently of the trigger mechanism, prevent-

CONFIDENTIAL-SUBJECT TO PROTECTIVE ORDER
KINZER V. REMINGTON

ing discharge of the firearm despite operation of the trigger mechanism and despite jarring which might otherwise cause an accidental discharge.

Further movement of the operating lever of the safety mechanism, in the direction required to engage the lock pin in the recess of the cocking lug, moves a cam attached to the operating lever into contact with a follower located on one end of a blade which is pivotably mounted on the receiver of the firearm. The cam pivots the blade about an axis generally perpendicular to the blade, raising an edge of the blade through a slot provided in the receiver of the firearm into a groove provided in the bolt of the firearm, thereby preventing the bolt from rotating away from its closed-and-locked position closing the breech.

It is, therefore, a principal feature of the invention that it includes a laterally-extending lock pin which is movable laterally into locking engagement in a recess provided in a part of the striker of a bolt action firearm, to positively engage and retain the striker, preventing discharge of the firearm.

It is another important feature of safety mechanism of the present invention that the lock pin positively moves the striker rearward in the receiver of the firearm as the lock pin moves into the recess provided in the cocking lug.

It is another important feature of the present invention that when the operating lever of the safety mechanism is in an intermediate position, the bolt may be rotated, but the cocking lug is held securely, preventing discharge of the firearm.

It is a primary advantage of the present invention that it provides greater safety then previously known safety mechanisms for bolt action firearms, since it locks the striker independently of the trigger mechanism of the firearm.

It is another primary advantage of the present invention that it is more convenient to operate than a bolt-mounted safety mechanism.

It is a further advantage of the present invention that it is less susceptible to wear than safety mechanisms which depend upon lockage of the trigger mechanism, particularly in firearms requiring only a slight movement of the trigger to discharge the firearm.

The foregoing and other objectives, features and advantages of the present invention will be more readily understood upon consideration of the following detailed description of the invention taken in conjunction with the accompanying drawings.

BRIEF DESCRIPTION OF THE DRAWINGS

FIG. 1 is a fragmentary partially cut away side elevational view of a rifle including an exemplary safety mechanism embodying the present invention.

FIG. 2 is a top view of the rear portion of the receiver of the rifle shown in FIG. 1, with the bolt removed.

FIG. 3 is a partially sectional side elevational view of a portion of the bolt of the rifle shown in FIG. 1, showing the lock pin and the blade of the safety mechanism shown in FIG. 1 engaged therein.

FIG. 4 is a bottom view, taken along line 4—4 of FIG. 3, of a portion of the bolt shown in FIG. 3, with the lock pin of the safety mechanism of the invention engaged therein.

FIG. 5 is a pictorial view, at an enlarged scale, of the lock pin of the safety mechanism shown in FIG. 1.

FIG. 6 is a bottom view, at an enlarged scale, of a detail of the bolt of the rifle shown in FIG. 1, showing the relationship between the lock pin of the safety mechanism and the cocking lug of the bolt.

FIG. 7 is a right side elevational view, at an enlarged scale, of the safety mechanism shown in FIG. 1.

FIG. 8 is a bottom view of the safety mechanism shown in FIG. 1, taken along line 8—8 of FIG. 7.

FIG. 9 is a left side elevational view of the safety mechanism shown in FIG. 1, taken along line 9—9 of FIG. 8.

DETAILED DESCRIPTION OF THE INVENTION

A bolt action rifle 10, equipped with a safety mechanism 12 which is a preferred embodiment of the present invention, is shown in FIG. 1. The rifle 10 comprises a receiver 14 having a barrel 15 attached at its forward end. A breech bolt 16 is operatively mounted in the receiver 14 to block the breech of the barrel 15. A bolt handle 18 of the breech bolt 16 is shown (partially cut away for clarity) in a forward-and-down, closed-and-locked position, and a striker 20 carried by the bolt 16, is in its cocked position, in which it is held rearward with respect to the bolt 16 against the force of a striker spring (not shown).

The trigger mechanism of the rifle comprises a trigger 22, pivotably mounted on a trigger pivot pin 24, and a sear lever 26 mounted on a sear pivot pin 28. A forward end of the trigger 22 is supported by a trigger adjusting screw 30 and a trigger spring 32, while a sear 34 is provided on an upper portion of the trigger 22 to releasably hold the sear lever 26 in a position interfering with the forward movement of the striker 20 when the firearm is cocked.

Referring now also to FIGS. 2-5, the safety mechanism of the present invention may be seen to comprise a backing piece 36 fitted against one side of the tang 38 of the receiver 14 of the rifle 10, and a lock pin 40, having a longitudinal axis 42, which extends laterally through a bore 43 defined in the backing piece 36 and the tang 38 of the receiver 14. An operating lever extends upward above the backing piece 38 and has a head 45 shaped to be conveniently moved by thumb pressure. An elongated opening 46, through which an outer end portion 47 of the lock pin 40 extends, is defined in the operating lever 44. A cover plate 48 is secured to the backing piece to limit movement of the operating lever 44, while a hole 50 defined in the cover plate 48 and located in alignment with the elongated opening 46 permits the lock pin 40 to move laterally and also permits observation of the position of the lock pin 40. The operating lever 44 may be moved forward, rotating about a pivot axis coincident with the central longitudinal axis 42 of the lock pin 40, from the position shown in solid line in FIG. 1, in which the safety mechanism of the invention is in a "safe" position, to the "off-safe" position shown in broken line, which permits the rifle 10 to be discharged.

A cam 52, is located on the lower portion of the operating lever 44, where it engages a follower 54 connected to a blade 56. The blade 56 is pivotably secured to the receiver 14 by, for example, a blade mounting screw 57 extending laterally through the blade into the receiver 14. An edge 58 of the blade 56 extends upward through a slot 60 in the receiver, engaging a groove 62 defined in the bottom of the bolt 16, near the bolt handle 18, preventing the bolt 16 from rotating out of its forward-and-down locked position. A blade spring 64 normally retains the edge 58 in a lowered position,

CONFIDENTIAL-SUBJECT TO PROTECTIVE ORDER
KINZER V. REMINGTON

R2539646

M-700 Plunger Type
BOLT LOCK (2)

R2539647

CONFIDENTIAL-SUBJECT TO PROTECTIVE ORDER
KINZER V. REMINGTON

"B" Series Photos

Bolt lock is mounted and can work independently of safety lever. Button shown in photo to right of safety lever is bolt latch actuating button.

B-1 Gun cocked - ready to fire
Safe in "Fire" position
Bolt is unlocked

B-2 Gun cocked
Safe in "ON SAFE" position
Bolt is locked

B-3 Gun cocked
Safe in "ON SAFE" position
Bolt latch actuating button depressed
Bolt unlocked and can be rotated.

F.E. Martin:T
4-11-78

CONFIDENTIAL-SUBJECT TO PROTECTIVE ORDER
KINZER V. REMINGTON

IREM 0030527 I

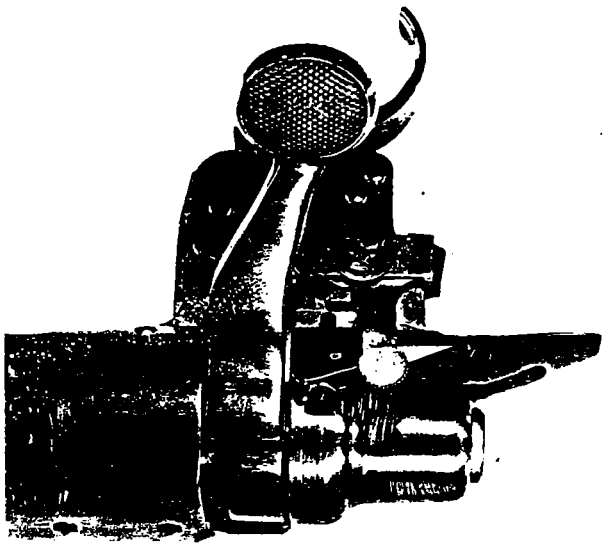

W

F

I

G

E

L

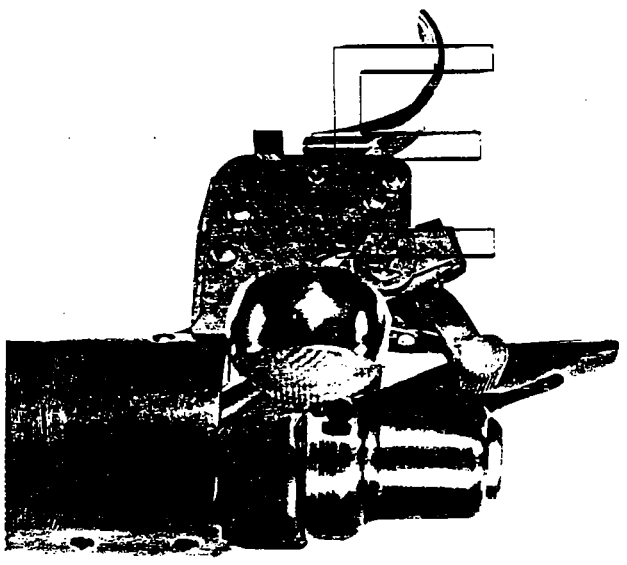

4. Engineer Calculations/Designers Notes

CONFIDENTIAL-SUBJECT TO PROTECTIVE ORDER
KINZER V. REMINGTON

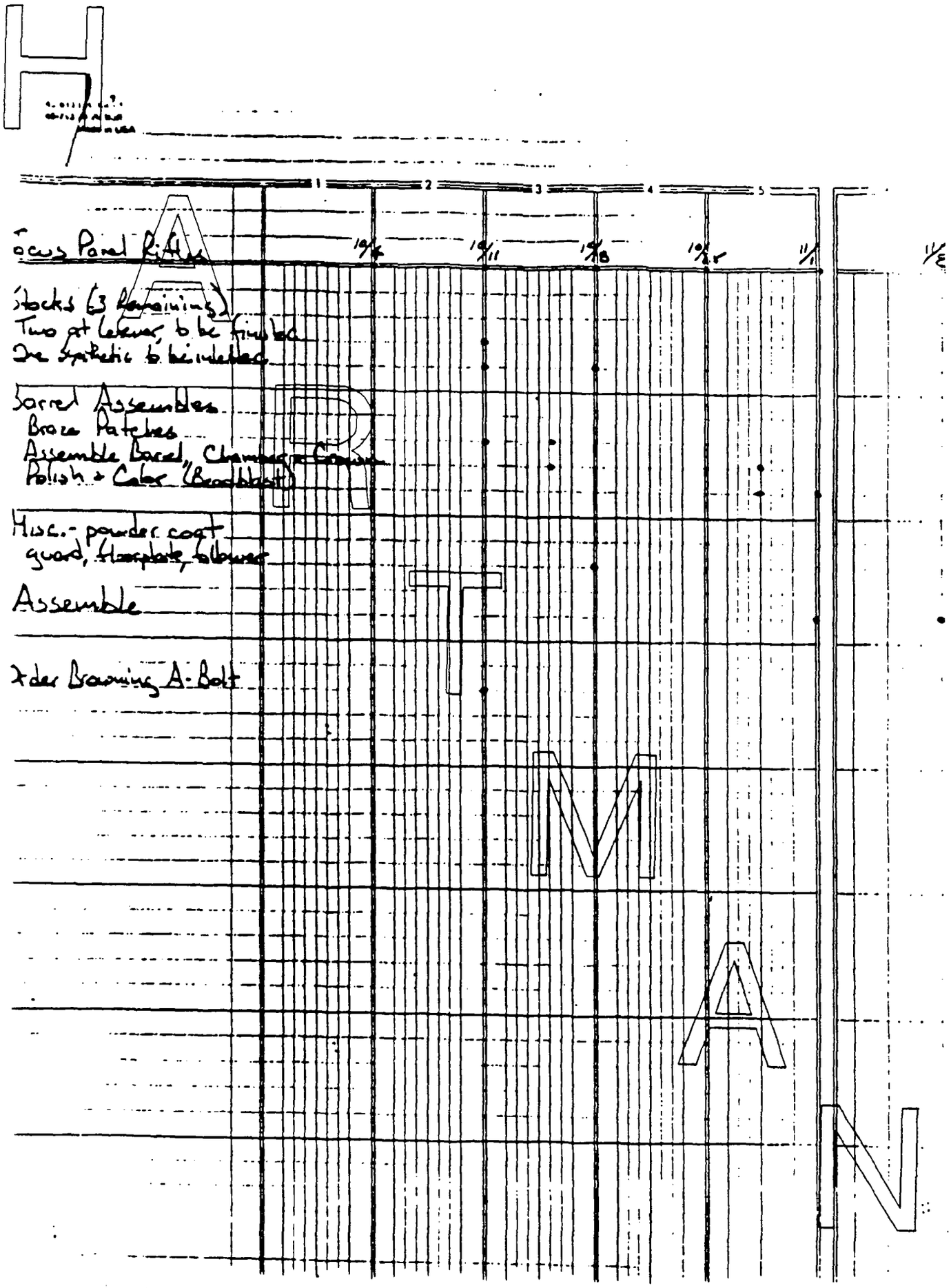
1
2
3
4
5
10/4
10/11
10/18
10/25
11/1
11/8
Focus Panel Rifles
Stocks (3 remaining)
Two get lacquer, to be finished
One synthetic to be installed
Barrel Assemblies
Brace Patches
Assemble Barrel, Chamber, Crown
Polish + Color (Bead blast)
Misc.- powder coat
guard, floorplate, follower
Assemble
Order Browning A-Bolt

ENGINEERING COMPUTATION SHEET

Sheet No. _____

Title of Proj. or Study: Sure-Cast

Proj. or Study No. _____

Subject: _____

Works: _____

Computer: _____

Date: 3-29-88 19

Trig. Gd.

- Vista of bow at bottom needs to be .030" smaller than width at top of bow
- Can go to .050 R. at inside corners of mag. well
- Use separate bushing at rear with squared flat on top of bow for seating
- ~ $1.58/part

Mag Latch

- Suggested that latch be made of steel by extrusion or investment casting (wear feel)

  Al die cast ~ $.20/part

- Suggest 90° angle between latch & finger grip

Mag. Follower

- Need flatness spec. (.010" bow acceptable)
- O.K.
- ~ $.28/part w/ hole drilled

Extractor

- Sure-Cast can not do.

→ Get Finished Print to Sure-Cast in one month

USE STANDARDS FOR MINIMUM ESSENTIAL INSTALLATIONS

CONFIDENTIAL-SUBJECT TO PROTECTIVE ORDER
KINZER V. REMINGTON

R2539652

ENGINEERING DU PONT COMPUTATION SHEET

SHEET NO. _____

TITLE OF PROJ. OR STUDY _____ PROJ. OR STUDY NO. _____

SUBJECT _____ WORKS _____

COMPUTER _____ DATE _____ 19 _____

Trig. Gd.

Location of hole
Diameter of hole .085
Diameter of finger clearance
Position of finger clearance
Width of latch slot
Position of latch slot

.75°

Configuration at bottom

.300 rear of fwd. hole ℄

.501 rear of fwd. hole ℄

.613 below top surface

Magazine wall dimensions at top
Draught angle of mag. wall
Position of latch spring stud in front of guard

(.125 ID spring)

.115 dia pin

℄ screw .422 below top

Radii in corners of mag. wall

7/32 R

.220

R

1/2 R

1/8 R

.300 to .375 R (3/8)

.100

.150

.200

.115

.315 pct in gd.

.210

.187

USE STANDARDS FOR MINIMUM ESSENTIAL INSTALLATIONS

ENGINEERING COMPUTATION SHEET

Sheet No. _____

Title of Proj. or Study _____ Proj. or Study No. _____

Subject NBAR Features _____ Works _____

Computer _____ Date 4-4-88 19 _____

Receiver:

	Internal	External	
Integral Recoil Lug	—	0	← perceived problem negated by SWS
Integral Scope Mts.	—	+	
Independent Bolt Lock	+	+	← LEGAL
Detachable Mag. Bx.	0	+	
Flat Sides	—	0	
Round Bottom	+	0	
Total Weight			
Same as M/700	0	0	
Lighter	0	+	

- Try integral scope mts. in which rings attach directly to receiver

Barrel:

→ Try BBL. contour currently used in Custom Shop
(Try adjusting magnum contour as well)
- Different Bbl. contour from magnum to non-magnum

→ Recessed crown (like Mtn. Rifle)

→ Get Hbls. from Tim McC.
- Strength
- Accuracy

→ Improve current BDL sights
(Take a look at Tim's new Custom Shop sights)

USE STANDARDS FOR MINIMUM ESSENTIAL INSTALLATIONS

CONFIDENTIAL-SUBJECT TO PROTECTIVE ORDER
KINZER V. REMINGTON

REV. 1-78

ENGINEERING COMPUTATION SHEET

SHEET NO. _____

TITLE OF PROJ. OR STUDY _____ PROJ. OR STUDY NO. _____

SUBJECT NBAR FEATURES WORKS _____

COMPUTER _____ DATE 4-5-88 19 _____

MAGAZINE BOX:

- TRY TO PUT SEPARATE BOTTOM PIECE ON BOX (slide on)

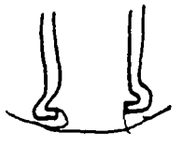

- OTHERWISE (BOX + GUARD) O.K.
- SPACER IS O.K.
- Also need a 5 pkt (.308) box for S.W.S.

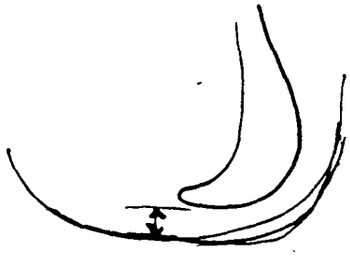

USE STANDARDS FOR MINIMUM ESSENTIAL INSTALLATIONS

CONFIDENTIAL-SUBJECT TO PROTECTIVE ORDER
KINZER V. REMINGTON

external powder coat ~.003/side

internal powder coat ~.001/side

Mag. box : max. length = 3.845 + .006 powder coat = 3.851

mag box : max. width rear = .945 + .006 powder coat = .951

max. width front = .805 + .006 powder coat = .811

Allow minimum of .010 lengthwise clearance → Min. length mag well = 3.851 + .010 = 3.861

→ $\boxed{3.861 - 3.871}$ after powder coat ~.001/side

(Mag well length) → $\boxed{3.863 - 3.873}$ as machined

Mag well width → allow min. of

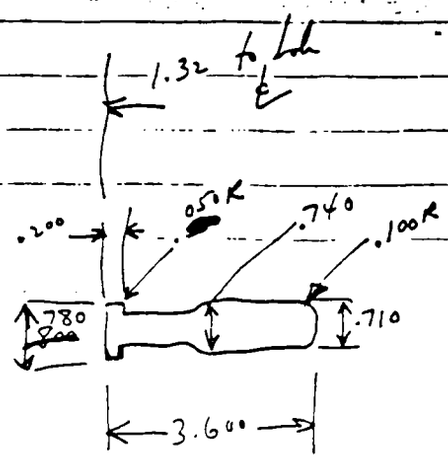

CONFIDENTIAL-SUBJECT TO PROTECTIVE ORDER
KINZER V. REMINGTON

CONFIDENTIAL-SUBJECT TO PROTECTIVE ORDER
KINZER V. REMINGTON

NEW BOLT ACTION RIFLE ITEMS TO IMPROVE UPON

09-MAR-1988 10:38:54 AM

NBAR PROBLEM	ALTERNATIVES
*Mag. box has vertical play at the rear within the magazine well.	*Put a stop surface on receiver to bias box downward at rear. *Form geometry in rear of box which will stop on top rear of mag. well. *Form geometry at bottom front of box to stop downward rotation.
*Mag. latch is hard to operate.	*Reduce line contact on finger through redesign of finger piece. *Lighten latch spring. *Lower latch spring position on latch (closer to pivot). *Cut away material from the trigger guard at the trigger piece area.
*(Trig. gd. + box) height varies w / respect to receiver in final assembly.	*Use spacer tube(s) between trig. gd. and receiver through which take down screws pass.
*Mag follower tips sideways: reduced capacity	*Add leg to side of follower at front.
*Cartridge may sometimes be made to stay down at the rear, thereby causing bolt override.	*Move mag. spring force rearward by shortening length of spring so that it just wraps around the front of the boss and is more rearward on the follower bottom.
*Mag. latch will hold box in mag. well even when latch is not in the full latch position	*Bevel top front edge of box so that latch pushes downward on box.

RAJ

R2539657

- Change follower dimensions
- Modify trig. gd. drwg. and give request to model shop
- Modify stock drwg.
- Change mag. spring drwg and purchase req. to Com. Spring

HARTMAN

HARTAN

IMPORTANT
READ THIS BOOK BEFORE USING THE FIREARM

INSTRUCTION BOOK
Model 700
Bolt Action,
Center Fire Rifle

Remington®

DU PONT

CONFIDENTIAL-SUBJECT TO PROTECTIVE ORDER
KINZER V. REMINGTON

HART

MODEL 700 BOLT ACTION RIFLE

PICTURE 1

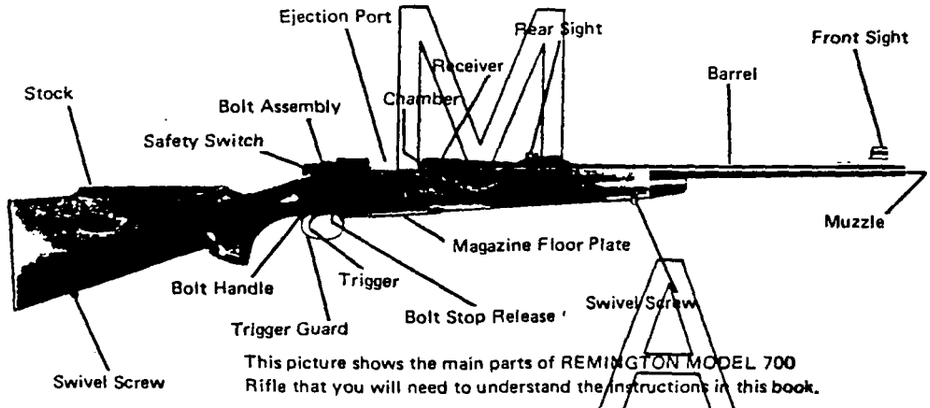

This picture shows the main parts of REMINGTON MODEL 700 Rifle that you will need to understand the instructions in this book.

This picture shows the parts of the ammunition:

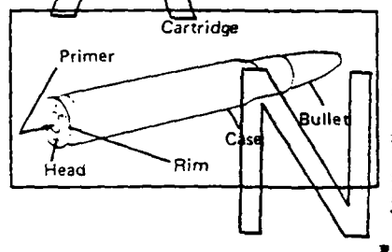

PICTURE 2
AMMUNITION

CONFIDENTIAL-SUBJECT TO PROTECTIVE ORDER
KINZER V. REMINGTON

R2539660

HARTMAN

SAFETY RULES

WARNING

READ THESE BASIC SAFETY RULES. Learn how to handle your firearm safely. Failure to obey these rules can result in serious personal injuries. Only you can prevent accidents.

KNOW YOUR FIREARM. To use it correctly and safely, read and follow the instructions in the enclosed firearms safety booklet and this instruction book.

TREAT EVERY FIREARM AS IF IT WERE LOADED. Don't rely on the safety switch. Use it as shown in this book.

NEVER MAKE ADJUSTMENTS. Do not make changes or alterations to any parts of a firearm. Use only REMINGTON parts. Never make an adjustment to the trigger, or change the shape or size of the sear, sear notch, or other parts.

MAKE YOURSELF SAFE. Wear eye protection, such as glasses or sunglasses, when shooting. Wear ear protection, such as ear plugs or muffs, when target shooting or plinking. Repeated exposure to shooting noise can cause permanent hearing loss. Never drink alcoholic beverages before or during shooting.

TAKE CARE OF YOUR FIREARM. Keep the barrel clean and free of obstructions. Clean and have the firearm checked periodically to make sure it is mechanically correct. Worn, damaged or missing parts maybe dangerous.

WATCH YOUR MUZZLE. Always keep the firearm pointed in a safe direction.

CONFIDENTIAL-SUBJECT TO PROTECTIVE ORDER
KINZER V. REMINGTON

R2539661

HARTMAN

SAFETY RULES

RANGE
½ TO 5
MILES

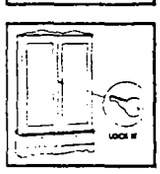

NEVER USE THE WRONG AMMUNITION. Only use ammunition that exactly matches the caliber or gauge markings on your firearm. Handloads can be dangerous. Remington Arms Company, Inc. is *not responsible for accidents* or damage caused by badly-loaded handloads.

LOAD YOUR FIREARM SAFELY. Never load a firearm until you are in a location where it is safe to shoot, and you are ready to shoot.

KNOW YOUR TARGET. Before you pull the trigger, make sure you can see the target clearly, and the path of the bullet, *slug, or* shot charge beyond the target. Never shoot at water, rocks, or any hard surface. Bullets may glance off such surfaces and cause injuries.

KNOW THE RANGE OF YOUR FIREARM. Remember, shotgun pellets can travel 500 yards and *shotgun slugs have a range of more* than one-half mile. Rimfire bullets can travel more than 1½ miles. Centerfire bullets can travel up to 5 miles.

IF FIREARM FAILS TO FIRE keep it pointed in safe direction, then unload *carefully avoiding exposure to breech.* If *firearm fires* but report or recoil seems weak, unload and then make sure the barrel is not obstructed.

UNLOAD YOUR FIREARM WHENEVER YOU ARE NOT SHOOTING. *Never carry or store* a loaded firearm in a building or a vehicle. Unload your firearm before climbing up or over a fallen tree, fence or slippery area.

STORE YOUR FIREARM SAFELY. Keep firearms and ammunition away from children. Lock unloaded firearms and ammunition securely in separate locations.

DF 0002914

CONFIDENTIAL-SUBJECT TO PROTECTIVE ORDER
KINZER V. REMINGTON

R2539662

HARMAN

IMPORTANT PARTS OF THE FIREARM

THE SAFETY SWITCH

The safety switch provides protection against accidental or unintentional discharge under normal usage when properly engaged.

To engage the safety switch, put the switch in the "S" position. See picture 3.

Always put the safety switch in the "S" position before handling, loading or unloading the firearm.

When you are ready to fire the firearm, put the safety switch in the "F" position. See picture 4.

Do not touch the trigger while moving the safety switch.

Never pull the trigger when the safety switch is in the "S" position.

WARNING: The firearm will fire when the trigger is pulled and the safety switch is in the "F" position.

STOP Even when the safety switch is in the "S" position, careless handling can cause the firearm to fire.

Picture 3

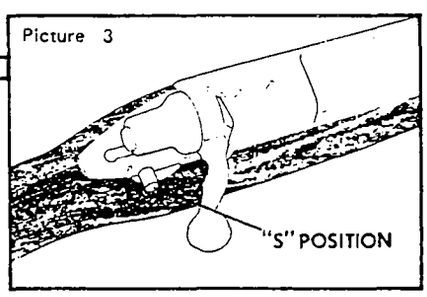

Picture 4

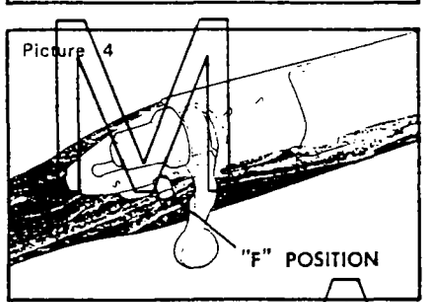

CONFIDENTIAL-SUBJECT TO PROTECTIVE ORDER
KINZER V. REMINGTON

R2539663

HART

THE BOLT ASSEMBLY

The bolt assembly locks the cartridge into the chamber.

TO INSTALL THE BOLT ASSEMBLY:

1. Point the firearm in a safe direction.
2. Put the safety switch in the "S" position.
3. Align the lugs on the bolt assembly with the receiver. See picture 5.
4. Slide the bolt assembly into the receiver and push all the way in.
5. To lock the bolt assembly into position push the bolt handle down.

TO REMOVE THE BOLT ASSEMBLY:

1. Point the firearm in a safe direction.
2. Put the safety switch in the "S" position.
3. Do not touch the trigger while moving the safety switch.
4. Raise the bolt handle.
5. Pull the bolt handle all the way back.
6. Push the bolt stop release. See picture 5.
7. As you push the bolt stop release, slide the bolt from the firearm.

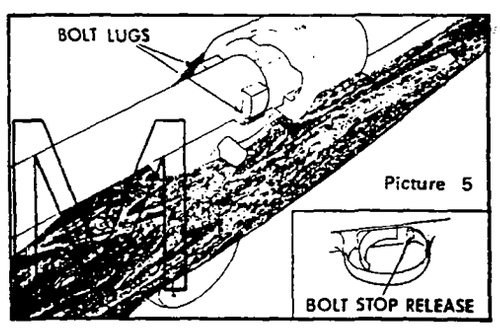

Picture 5

THE TRIGGER ASSEMBLY

Pulling the trigger fires the firearm.

The trigger is adjusted at the factory. All adjustments to the trigger must be made by the factory or a REMINGTON RECOMMENDED GUNSMITH.

Never remove the trigger mechanism, or make adjustments to the trigger or trigger assembly.

NEVER put your finger on the trigger unless you are going to fire the firearm.

CONFIDENTIAL-SUBJECT TO PROTECTIVE ORDER
KINZER V. REMINGTON

R2539664

HARTMAN

THE BARREL

The inside of the barrel must be clean and free of obstructions.

I. TO CHECK THE INSIDE OF THE BARREL:

1. Point the firearm in a safe direction.
2. Put the safety switch in the "S" position.
3. Raise the bolt handle.
4. Pull the bolt handle all the way back.
5. Remove any ammunition from the chamber or magazine. See page 8.
6. Remove the bolt. See page 5.
7. Look through the inside of the barrel from the chamber end to the muzzle. See picture 1.

II TO REMOVE OBJECT FROM INSIDE THE BARREL:

1. Use the correct size cleaning rod.
2. Push the cleaning rod from the chamber end all the way through the barrel, until the rod comes out the muzzle.
3. If an object cannot be easily pushed out of the barrel with a cleaning rod, return the firearm to the factory or a REMINGTON RECOMMENDED GUNSMITH.

STOP NEVER try to remove an object from the barrel by loading another cartridge and firing.

III TO CLEAN THE BARREL FOLLOW INSTRUCTIONS SHOWN ON PAGE 11.

Before loading the firearm make sure the inside of the barrel is free of dirt, or other objects.

CONFIDENTIAL-SUBJECT TO PROTECTIVE ORDER
KINZER V. REMINGTON

R2539665

HARTMAN

TO LOAD THE FIREARM

I TO LOAD THE MAGAZINE AND CHAMBER:

1. Point the firearm in a safe direction.
2. Put the safety switch in the "S" position.
3. Raise the bolt handle.
4. Pull the bolt handle all the way back.
5. Push four cartridges of the correct caliber, one at a time, into the magazine. If the firearm is a magnum, you can only load three cartridges. If the firearm is a 17, 222, or 223 caliber, the magazine will hold 5 cartridges. Keep the bullets aligned toward the chamber. See Picture 6.
6. Put one cartridge into the chamber.
7. Use your fingers to push the cartridges in the magazine all the way down. Slowly slide the bolt assembly forward, so that the bolt slides over the top of the cartridges in the magazine.
8. Push the bolt handle down.

THE FIREARM IS NOW LOADED.

9. To fire the firearm, put the safety switch in the "F" position.

THE FIREARM IS READY TO FIRE.

II TO LOAD ONE CARTRIDGE ONLY:

1. Point the firearm in a safe direction.
2. Put the safety switch in the "S" position.
3. Raise the bolt handle.
4. *Pull the bolt handle all the way back.*
5. Put one cartridge of the correct caliber on the magazine follower, or in the chamber. See picture 6.
6. Slide the bolt handle forward, then push the bolt handle down to lock the cartridge into the chamber.

THE FIREARM IS NOW LOADED.

7. To fire the firearm put the safety switch in the "F" position.

THE FIREARM IS READY TO FIRE.

WARNING: Always check the cartridge for the correct caliber before loading the firearm.

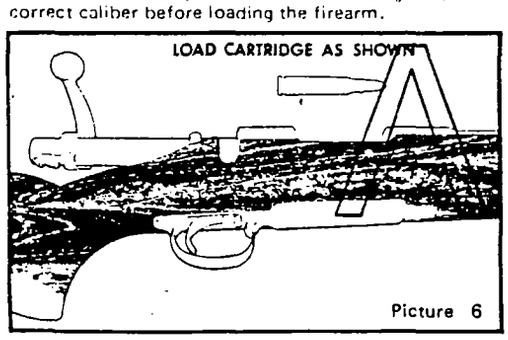

Picture 6

CONFIDENTIAL-SUBJECT TO PROTECTIVE ORDER
KINZER V. REMINGTON
R2539666

HARTNY

TO UNLOAD THE FIREARM

There are two types of Model 700 rifles, one with a FLOOR PLATE and one without a FLOOR PLATE.

INSTRUCTIONS FOR THE MODELS WITH A FLOOR PLATE

1. Point the muzzle in a safe direction.
2. Put the safety switch in the "S" position.
3. Raise the bolt handle.
4. Put one hand over the top of the ejection port.
5. Slowly pull the bolt handle back with your other hand to remove the cartridge from the chamber.
6. Hold the cartridge and remove it from the firearm.
7. Put your hand under the floor plate.
8. Push the floor plate latch to release the floor plate. See picture 7.
   The magazine spring and follower will be released from the magazine.
9. Remove released cartridges.
10. Push in the magazine follower, then close the floor plate.

WARNING: Make sure there are no cartridges in the chamber or magazine.

INSTRUCTIONS FOR THE MODELS WITHOUT A FLOOR PLATE

1. Point the muzzle in a safe direction.
2. Put the safety switch in the "S" position.
3. Raise the bolt handle.
4. Put one hand over the top of the ejection port.
5. Slowly pull the bolt handle back with your other hand to remove the cartridge from the chamber.
6. Hold the cartridge and remove it from the firearm.
7. Keep the muzzle pointed up, push the bolt handle slowly forward until the cartridge is released from the magazine. CAUTION: The cartridge may slide into the chamber, if the bolt is pushed too far forward. See note below.
8. Pull the bolt handle fully back and remove the cartridge from the ejection port.
9. Repeat this action until the magazine is empty.

WARNING: Check the chamber and the magazine to make sure there are no cartridges in the firearm.

NOTE: If the bolt is pushed all the way forward, and a cartridge slides into the chamber, the gun can be fired. Normally, the cartridges will slide out of the chamber when the bolt is pulled back. If the cartridge remains in the chamber, point the muzzle in a safe direction, slide the bolt forward all the way and push the bolt handle down to lock the bolt. Then repeat steps 2 through 9 above.

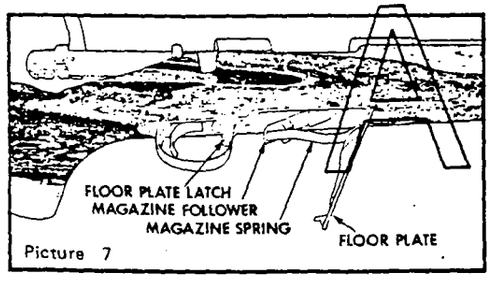

Picture 7

CONFIDENTIAL-SUBJECT TO PROTECTIVE ORDER
KINZER V. REMINGTON

R2539667

HARTMAN

TO ADJUST THE SIGHTS

The sights are adjusted at the factory to hit a target at 100 yards. NOTE: For all models except the Varmint and Classic Grade.

TO ADJUST THE REAR SIGHT

Move the rear sight in the same direction as you need to move the bullet on the target.

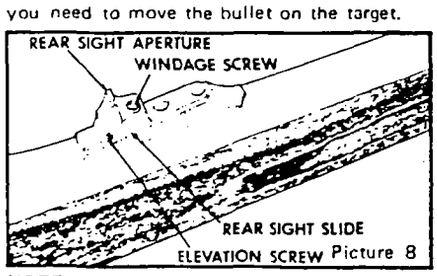

Picture 8

NOTE: For more information on ballistics and trajectory, see the REMINGTON catalog.

TELESCOPIC SIGHTS

The top of the receiver has holes for the installation of telescopic sights.

POSITION ON TARGET	ADJUSTMENTS
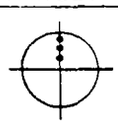 Bullet hits above the center.	a. Loosen the elevation screw on the rear sight. b. Slide the rear sight down (backward) on the ramp. c. Tighten the elevation screw.
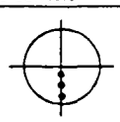 Bullet hits below the center.	a. Loosen the elevation screw on the rear sight. b. Slide the rear sight up (forward) on the ramp. c. Tighten the elevation screw.
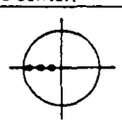 Bullet hits to the left.	a. Loosen the windage screw on the rear sight. b. Slide the rear sight aperture to the right. c. Tighten the windage screw.
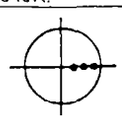 Bullet hits to the right.	a. Loosen the windage screw on the rear sight. b. Slide the rear sight aperture to the left. c. Tighten the windage screw.

CONFIDENTIAL-SUBJECT TO PROTECTIVE ORDER
KINZER V. REMINGTON

R2539668

HARTMAN

TO ASSEMBLE THE SLING STRAP

See picture 9 for the location of parts:

1. Slide the strap through the band.
2. Push the strap up through the first swivel.
3. Slide the strap back through the band.
4. Push the strap into and through the buckle.
5. Push the strap down and through the second swivel.
6. Align the slots in the strap and fasten with the brass fastener.

TO ATTACH THE SLING STRAP ASSEMBLY TO THE STOCK.

See picture 9 for location of parts:

7. Push plunger on swivel until the small plate lifts and is free of the stud.
8. Push the stud into the center of the swivel screw.
9. Close the plate on the swivel to lock the swivel to the swivel screw.
10. To adjust the length of the strap, pull the strap through the buckle.

TO REMOVE THE SLING FROM THE STOCK
To remove the sling strap assembly from the stock repeat step 7.

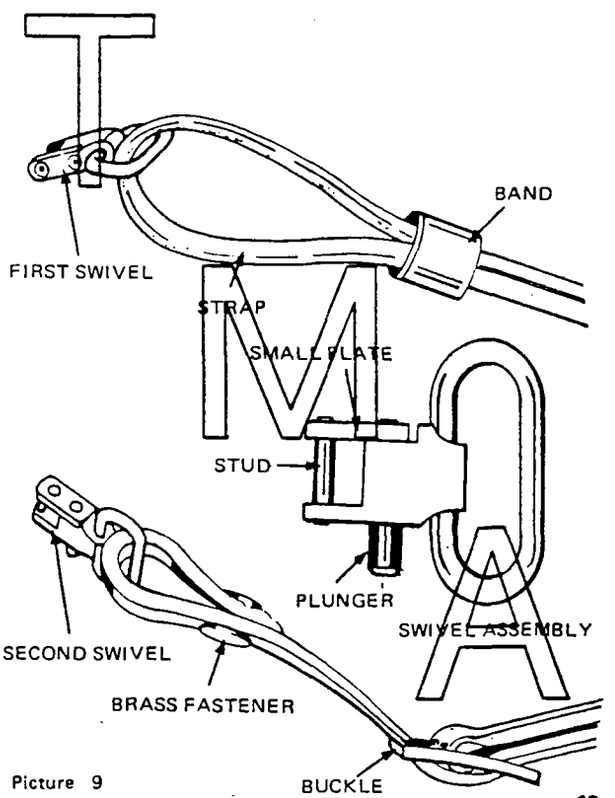

Picture 9

CONFIDENTIAL-SUBJECT TO PROTECTIVE ORDER
KINZER V. REMINGTON

R2539669

H A R T M A N

LUBRICATION AND MAINTENANCE

LUBRICATION:

Over-lubrication should be avoided at all times. A thin coat of Rem[tm] Oil is all that is needed to prevent the possibility of rusting. See note below.

When the firearm is to be stored, it should be carefully cleaned and thoroughly oiled. Outside surfaces should be wiped with a light coat of Rem[tm] Oil occasionally.

When firearm is to be reused, all excess lubrication must be removed. The chamber and bore must be thoroughly wiped dry.

NOTE: Remington Rem[tm] Oil with DuPont Teflon Wet Lubricant is available from your local dealer. If your dealer is out of stock, ask him to order Rem[tm] Oil from his Remington distributor.

TO CLEAN THE BARREL

WARNING: Check the chamber and magazine to make sure there are no cartridges in the firearm.

1. Use the equipment provided in a good cleaning kit.
2. Remove the bolt assembly. See instructions on Page 5.
3. Select the correct caliber cleaning brush and attach the brush to the cleaning rod.
4. Put the cleaning brush into the gun cleaning solvent.

   NOTE: Barrel should lay horizontally with the ejection port facing down during cleaning. Always clean the barrel from the chamber end to the muzzle.

5. Push the cleaning brush through the barrel several times.
6. Remove brush from rod, attach tip with patch, and push through the bore.
7. Repeat several times, using a new cleaning patch each time, until the patch is not dirty.
8. Push a clean patch saturated with Rem[tm] Oil through the barrel.
9. Push a clean dry patch through the barrel to remove excess lubricant.
10. Apply a thin coat of Rem[tm] Oil to the outside of the barrel with a soft clean cloth.
11. After cleaning the barrel, clean the receiver and the trigger assembly.

WARNING: This firearm should be checked periodically by the Remington Arms Company, Inc. or a REMINGTON RECOMMENDED GUNSMITH. This will insure proper inspection and any necessary replacement of worn or damaged parts.

CONFIDENTIAL-SUBJECT TO PROTECTIVE ORDER
KINZER V. REMINGTON

R2539670

TO CLEAN THE RECEIVER AND TRIGGER ASSEMBLY

1. Put safety switch to "S" position.
2. Remove the bolt assembly. See Instructions on Page 5.
3. Turn the rifle upside down.
4. Remove the screws from the trigger guard. See Picture 10.
5. Lift the stock away from the receiver and trigger assembly.

   MODELS WITHOUT A FLOOR PLATE:
   Remove the magazine spring and follower from the receiver.

   NOTE: Clean the receiver and trigger assembly as a unit with Rem™ Oil.

6. Spray the receiver and the four points of the trigger assembly with Rem™ Oil (see Picture 11). Let stand for 15 minutes. Spray again to wash off components. Shake off excess lubricant.

WARNING: Excessive use of a non-recommended lubricant could cause serious function problems possibly leading to accidental firing.

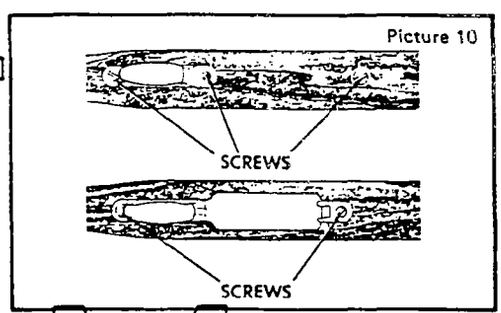

Picture 10

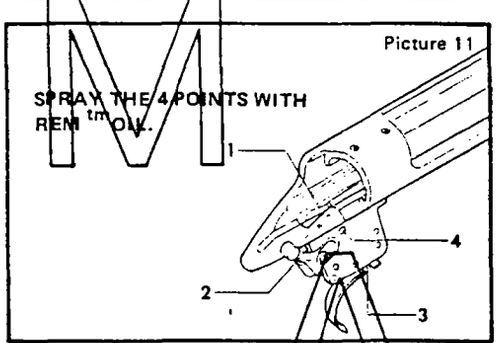

Picture 11

CONFIDENTIAL-SUBJECT TO PROTECTIVE ORDER
KINZER V. REMINGTON

R2539671

HARTMAN

TO ASSEMBLE THE MODELS WITHOUT A FLOOR PLATE

1. Put the magazine follower and the spring into the magazine.
2. Put the stock over the receiver and trigger assembly.
3. Replace and tighten the screws on the trigger guard.

WARNING: Before you replace the bolt assembly, make sure the barrel is free of obstructions.

4. Replace the bolt assembly. See Instruction on Page 5.

WARNING: After cleaning the trigger assembly, check the chamber and magazine to make sure there are no cartridges in the firearm. Put the safety switch in the "F" position. Close the bolt smartly. The firing pin must remain cocked. To check, pull the trigger. The firing pin must fall. Repeat the test at least ten times. If the firing pin will not remain cocked when the bolt is closed smartly, return the firearm to the factory, or a REMINGTON RECOMMENDED GUNSMITH.

TO ASSEMBLE THE MODELS WITH A FLOOR PLATE

1. Put the magazine all the way into the bottom of the receiver.
2. Assemble the trigger guard assembly on the stock.
3. Put the stock over the receiver and trigger assembly.
4. Replace and tighten the trigger guard screws.
5. Close the Floor Plate.

WARNING: Before you replace the bolt assembly, make sure the barrel is free of obstructions.

6. Replace the bolt assembly. See Instruction on Page 5.

WARNING: After cleaning the trigger assembly, check the chamber and magazine to make sure there are no cartridges in the firearm. Put the safety switch in the "F" position. Close the bolt smartly. The firing pin must remain cocked. To check, pull the trigger. The firing pin must fall. Repeat the test at least ten times. If the firing pin will not remain cocked when the bolt is closed smartly, return the firearm to the factory, or a REMINGTON RECOMMENDED GUNSMITH.

CLEANING FREQUENCY

1. Before and after long term storage.
2. If the rifle has been subjected to adverse conditions; such as, shooting in the rain, snow, sleet, or in salt water areas.
3. If the rifle is exposed to dirty conditions; such as, laying on the ground outdoors, dropped in mud, etc.

CONFIDENTIAL-SUBJECT TO PROTECTIVE ORDER
KINZER V. REMINGTON

R2539672

HART MANN

INSTRUCTIONS FOR CLEANING THE BOLT ASSEMBLY

TO DISASSEMBLE THE BOLT FOR CLEANING

1. Remove the bolt assembly from the firearm. See Instruction on Page 5.
2. Put the notch on the firing pin head over a metal edge. Pull the bolt assembly away from the firing pin. Put a coin into the slot near the back edge of the firing pin head. See Picture 12.
3. Hold the bolt assembly and turn the bolt plug counter clockwise until the firing pin assembly can be removed from the bolt assembly.

CAUTION: Clean the firng pin assembly as a unit.

4. Clean all parts with gun cleaning solvent. Dry with a clean cloth.
5. Apply a thin coat of Rem™ Oil.

TO ASSEMBLE

1. Put the firing pin assembly into the rear of the bolt assembly.
2. Tighten the bolt plug into the bolt assembly with your hand.
3. Pull the coin from the slot in the firing pin head.
4. Turn the bolt plug until the firing pin head goes into the small notch on the rear rim of the bolt. The bolt is now cocked. See Picture 13.
   NOTE: The bolt must be cocked to be assembled into the rifle.
5. Assemble the bolt assembly into the rifle. See Instructions on Page 5.

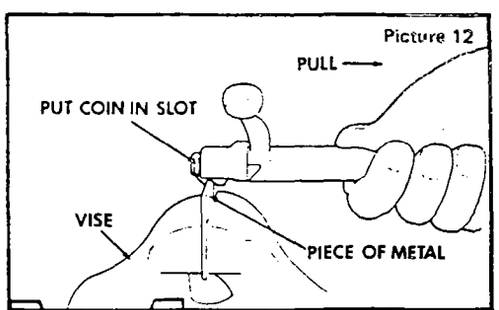

Picture 12

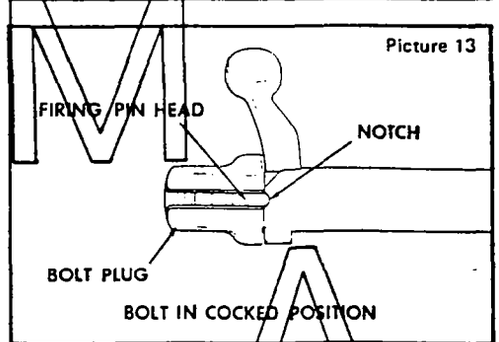

Picture 13

CONFIDENTIAL-SUBJECT TO PROTECTIVE ORDER
KINZER V. REMINGTON

R2539673

HARTMAN

HOW TO ORDER PARTS FROM THE REMINGTON FACTORY

TO ORDER PARTS

Arms Service - Parts (315) 895-7393

1. Use the picture on page 16 to find the correct part name and number.
2. Write the model and serial number of your firearm, and the part name and number on the parts order.
3. Send parts order to:

   Arms Service Division
   Remington Arms Company, Inc.
   Ilion, New York 13357
4. We can ship your order on a C.O.D. basis or provide an estimate of your required remittance.

   NOTE: Bolts, barrels, or receivers for centerfire rifles, pistols, and rimfire rifles are not sold separately. Repairs or replacements for these parts must be done by Remington Arms Company, Inc. Barrels and bolts for shotguns are available as parts.

WARNING: Use only Remington parts in Remington firearms.

TO ORDER FACTORY SERVICE:

Arms Service - Repairs (315) 895-7791

Write a short description of the problem.

1. Give the model and serial number. Make a copy of this note. Attach the original note to the firearm, and put the copy in an envelope attached to the outside of the shipping box.
2. Make sure the gun is unloaded. Never include any ammunition in the package with the firearm.
3. Send by either United Parcel Service or Parcel Post. **NOTE:** Make sure the gun is unloaded, and there is no ammunition in the box.
4. Get insurance for the firearm.
5. Record serial number, it is required when calling factory to inquire if firearm has been received for repairs.
6. Send firearms for factory service to:

   Arms Service Division
   Remington Arms Company, Inc.
   Ilion, New York 13357

INSTRUCTION BOOKS:

To get instruction books for any Remington firearm, write to Remington Arms Co., Inc., Arms Service Division, Ilion, New York 13357. Give the model, serial number, gauge or caliber.

REMINGTON AUTHORIZED GUNSMITHS:

A listing is available from Remington Arms Company, write to Remington Arms Co., Inc., Arms Service Division, Ilion, New York 13357.

CONFIDENTIAL-SUBJECT TO PROTECTIVE ORDER
KINZER V. REMINGTON

R2539674

HARTMAN

MODEL 700
Bolt Action Center Fire Rifle

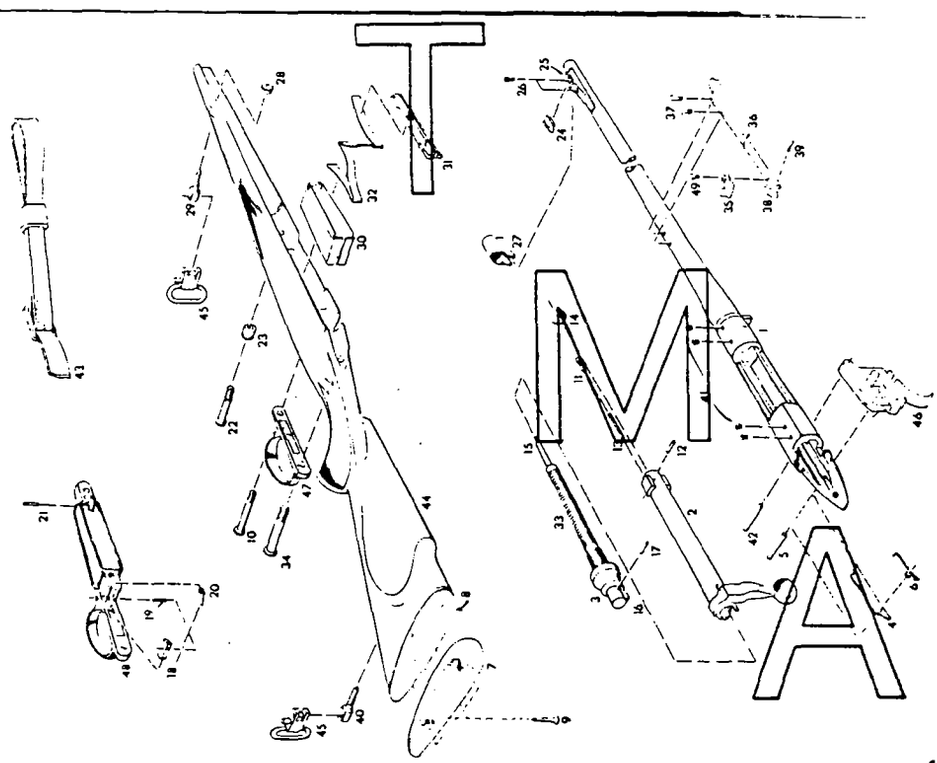

HOW TO ORDER PARTS AND SERVICE

CONFIDENTIAL-SUBJECT TO PROTECTIVE ORDER
KINZER V. REMINGTON

R2539675

HART

MODEL 700 • PARTS LIST

PARTS SUBJECT TO CHANGE WITHOUT NOTICE:
FOB Ilion, N.Y.

View No.	Part No.	NAME	View No.	Part No.	NAME
		NOTE: Basic 30-06 Caliber listed below.	13	17017	Ejector Spring
			14	91816	Extractor
1		Barrel Assembly	15	22020	Firing Pin
2		Bolt Assembly	16	22043	Firing Pin Assembly, ADL Grade
		Bolt Final Assembly		22040	Firing Pin Assembly BDL Grade
3	92510	Bolt Plug ADL	17	17022	Firing Pin Cross Pin
	17012	Bolt Plug BDL	18	15291	Floor Plate Latch, BDL Grade
4	17013	Bolt Stop (Restricted)	19	16451	Floor Plate Latch Pin, BDL Grade
5	24475	Bolt Stop Pin (Restricted)	20	16452	Floor Plate Latch Spring, BDL Grade
6	15224	Bolt Stop Spring (Restricted)	21	16453	Floor Plate Pivot Pin, BDL Grade
7	90953	Butt Plate	22	22035	Front Guard Screw
8	90954	Butt Plate Spacer BDL Grade	23	15161	Front Guard Screw Bushing, ADL Grade
9	25380	Butt Plate Screw	24	15373	Front Sight
10	15287	Center Guard Screw ADL Grade		15719	Front Sight (Low)
11	17017	Ejector	25	28510	Front Sight Ramp
12	17676	Ejector Pin		15635	Front Sight Ramp, BDL Grade
			26	28505	Front Sight Ramp Screw

CONFIDENTIAL-SUBJECT TO PROTECTIVE ORDER
KINZER V. REMINGTON

R2539676

HART

View No.	Part No.	NAME	View No.	Part No.	NAME
27	15363	Front Sight Hood, BDL Grade	37	28605	Rear Sight Base Screw (2)
29	15358	Front Swivel Screw	38	90905	Rear Sight Slide
	90957	Grip Cap, BDL Grade (not shown)	39	90906	Elevation Screw
	25380	Grip Cap Screw	40	15358	Rear Swivel Screw
	90958	Grip Cap Spacer, BDL Grade (not shown)	41	17034	Receiver Plug Screw
30	15284	Magazine, ADL Grade	42	24476	Sear Pin (Restricted)
	16430	Magazine, BDL Grade (not shown)	43	30855	Sling Strap Assembly, BDL Grade
31	92492	Magazine Follower, ADL		26990	Sling Strap Assembly & Mountings Comp
	91017	Magazine Follower, BDL	44	100021	Stock Assembly, ADL Grade
	15940	Magazine Tab Screw, ADL Grade		33371	Stock Assembly, BDL Grade
32	17028	Magazine Spring		18186	Stock Reinforcing Screw (not shown)
	15677	Magazine Spring, BDL Grade		16970	Stock Reinforcing Screw Dowel (not shown)
33	17029	Main Spring	45	26555	Swivel Assembly, BDL Grade (Q.D.)
34	26365	Rear Guard Screw		26990	Sling Strap Assembly & Mountings Comp
35	32510	Rear Sight Aperture	46	26345	Trigger Assembly (Restricted)
	32524	Rear Sight Assembly	47	15281	Trigger Guard
36	91595	Rear Sight Base			

NAA

CONFIDENTIAL-SUBJECT TO PROTECTIVE ORDER
KINZER V. REMINGTON

R2539677

HARTMAN

View No.	Part No.	NAME
48	26371	Trigger Guard Assembly, BDL Grade. . . .
49	90904	Windage Screw . . . . .
		ADDITIONAL CALIBERS
		See 30-06 list for parts not listed below
		Barrel Assembly. . . . .
	15850	Extractor 222 Rem.,223 Rem. . . . .
	14669	Extractor 308 Win.,7mm-08 Rem., 243 Win.,6mm Rem . . . . .
	15709	Extractor Magnum Calibers . . . . .
	27342	Extractor Rivet 222 Rem.,223 Rem . . . .
	27340	Extractor Rivet 308 Win.,7mm-08 Rem., 243 Win.,6mm Rem . . . . .
	27431	Extractor Rivet Magnum Calibers. . . . .
	22021	Firing Pin, 222 Rem.,243-308 Win.,6mm Rem.,22-250 Rem.,223 Rem., 17 Rem. Rem., 17 Rem. . . . .
	22042	Firing Pin Assembly, 222 Rem., 17 Rem., 243 Win., 308 Win.,6mm Rem., 22-250 Rem., ADL Grade . . . . .

View No.	Part No.	NAME
	22041	Firing Pin Assembly, 222 Rem., 17 Rem., 243 Win., 308 Win., 6mm Rem., 22-250 Rem., 223 Rem., BDL Grade . . . . .
	22037	Front Guard Screw, 222 Rem., 223 Rem., 243 & 308 Win., 6mm Rem., 22-250 Rem., 17. . . . .
	14659	Front Sight, 7mm Rem. Mag., 264 Win . .
	28511	Front Sight Ramp, ADL Grade . . . . .
	15992	Front Sight Ramp, BDL Grade . . . . .
	15282	Magazine, ADL Grade, 222 Rem., 223, 17 Rem . . . . .
	16716	Magazine, BDL Grade, 222 Rem., 223, 17 Rem . . . . .
	15283	Magazine, ADL Grade, 243 & 308, 6mm Rem., 22-250 Rem . . . . .
	16715	Magazine, BDL Grade, 243 & 308, 6mm Rem., 22-250 Rem . . . . .

CONFIDENTIAL-SUBJECT TO PROTECTIVE ORDER
KINZER V. REMINGTON

R2539678

HART

View No.	Part No.	NAME	View No.	Part No.	NAME
	92508	Magazine Follower, 222 ADL		17891	Magazine Spring, 243 & 308 Win., 6mm Rem . . . . .
	90951	Magazine Follower, 222 Rem., BDL		15698	Magazine Spring, 22-250 Rem., 6mm Rem., 243 Win., BDL Grade. . . . .
	92455	Magazine Follower, 243, 308, 6mm, 22-250 ADL.		17058	Main Spring, 222 Rem., 223 Rem., 308 Win., 17 Rem . . . . .
	90982	Magazine Follower, 243 & 308 Win., 6mm Rem., 22-250 Rem., BDL		90949	Recoil Pad, 7mm Rem. Mag., 264 & 300 Win., Mag., 8mm Rem. Mag . . . . .
	90951	Magazine Follower, 223, 17 Rem., BDL . .		25410	Recoil Pad Screw, 7mm Rem. Mag., 264 & 300 Win. Mag., 8mm Rem. Mag. . . . .
	91017	Magazine Follower, 270, 25-06, 30-06 (BDL Grade).		100022	Stock Assembly, 7mm Rem. Mag., ADL Grade. . . . .
	90952	Magazine Follower, 8mm Rem. Mag., BDL Grade.		100020	Stock Assembly, 222 Rem., 243 Win., 308 Win., 6mm Rem., 22-250 Rem., ADL Grade. . . . .
	15286	Magazine Spacer, 222 Rem., BDL Grade. .		33365	Stock Assembly, 222 Rem., 243 Win., 308 Win., 6mm Rem., 22-250 Rem., ADL Grade. . . . .
	15742	Magazine Spacer, 222 Rem., ADL Grade. .			
	15286	Magazine Spacer, 223 Rem., BDL Grade, 17 Rem.			
	91133	Magazine Spring, 222 Rem., 223 Rem., 17 Rem.			

CONFIDENTIAL-SUBJECT TO PROTECTIVE ORDER
KINZER V. REMINGTON

R2539679

HARTMAN

View No.	Part No.	NAME
	33385	Stock Assembly, 7mm Rem., Mag., 264-300 Win., Mag., BDL Grade, 8mm Rem., Mag. . . . .
	33370	Stock Assembly, 222 Rem., 243 Win., 308 Win., 6mm Rem., 22-250 Rem., BDL Grade, 17 Rem . . . . .
	26370	Trigger Guard Assembly, BDL Grade, 222 Rem., 17 Rem., 223 Rem., 243 Win., 308 Win., 6mm Rem., 22-250 Rem. . . .
		MODEL 700 VARMINT
		See 30-06 list for parts not listed below
		Barrel Assembly. . . . .
	16204	Front Scope Base . . . . .
	18843	Rear Scope Base. . . . .
	16205	Scope Base Screw, Front. . . . .
	18842	Scope Base Screw, Rear . . . . .

View No.	Part No.	NAME
	33376	Stock Assembly, 222 Rem., 223 Rem., 243 Win., 6mm Rem., 22-250 Rem. . . .
	33375	Stock Assembly, 25-06. . . . .
		MODEL 700 "CLASSIC"
		See 30-06 list for parts not listed below
		Barrel Assembly. . . . .
	91544	Recoil Pad, 22-250 Rem., 243 Win., 6mm Rem., 270 Win., 30-06 . . . . .
	91556	Recoil Pad, 7mm Rem., Mag. . . . .
	25410	Recoil Pad Screw. . . . .
	34591	Stock Assembly, 270 Win., 30-06. . . . .
	34590	Stock Assembly, 22-250 Rem., 6mm Rem., 243 Win . . . . .
	34592	Stock Assembly, 7mm Rem. Mag. . . . .

CONFIDENTIAL-SUBJECT TO PROTECTIVE ORDER
KINZER V. REMINGTON

R2539680

HART

View No.	Part No.	NAME
		MODEL 700 MOUNTAIN RIFLE
		See 30-06 BDL list for parts not listed below.
	92510	Bolt Plug
	22043	Firing Pin Assembly
	92755	Grip Cap
	92762	Recoil Pad
	25410	Recoil Pad Screw
	100565	Stock Assembly
		MODEL 700 POLICE
		See 30-06 list for parts not listed below.
		Barrel Assembly
		Bolt Assembly
	93785	Bolt Plug
	15287	Center Guard Screw
	22044	Firing Pin Assembly
	22037	Front Guard Screw
	93353	Magazine Follower 223
	93120	Magazine Follower 308
	91133	Magazine Spring 223
	17891	Magazine Spring 308
	102820	Stock Assembly
	92829	Trigger Guard

View No.	Part No.	NAME
		MODEL 700 LEFT HAND
		See 30-06 list for parts not listed below.
		Barrel Assembly
		Bolt Assembly
		Bolt Final Assembly
	90554	Bolt Stop Spring .....(Restricted)
	90982	Magazine Follower 22-250, 243 & 308
	90952	Magazine Follower Magnum
	15699	Magazine Spring 22-250
	17891	Magazine Spring 243-308
	33390	Stock Assembly 22-250, 243, 308
	33391	Stock Assembly ____
	33395	Stock Assembly Magnum
	32905	Trigger Housing Assembly ...(Restricted)

NAN

CONFIDENTIAL-SUBJECT TO PROTECTIVE ORDER
KINZER V. REMINGTON

R2539681

H

A

R

T

Remington®

DU PONT

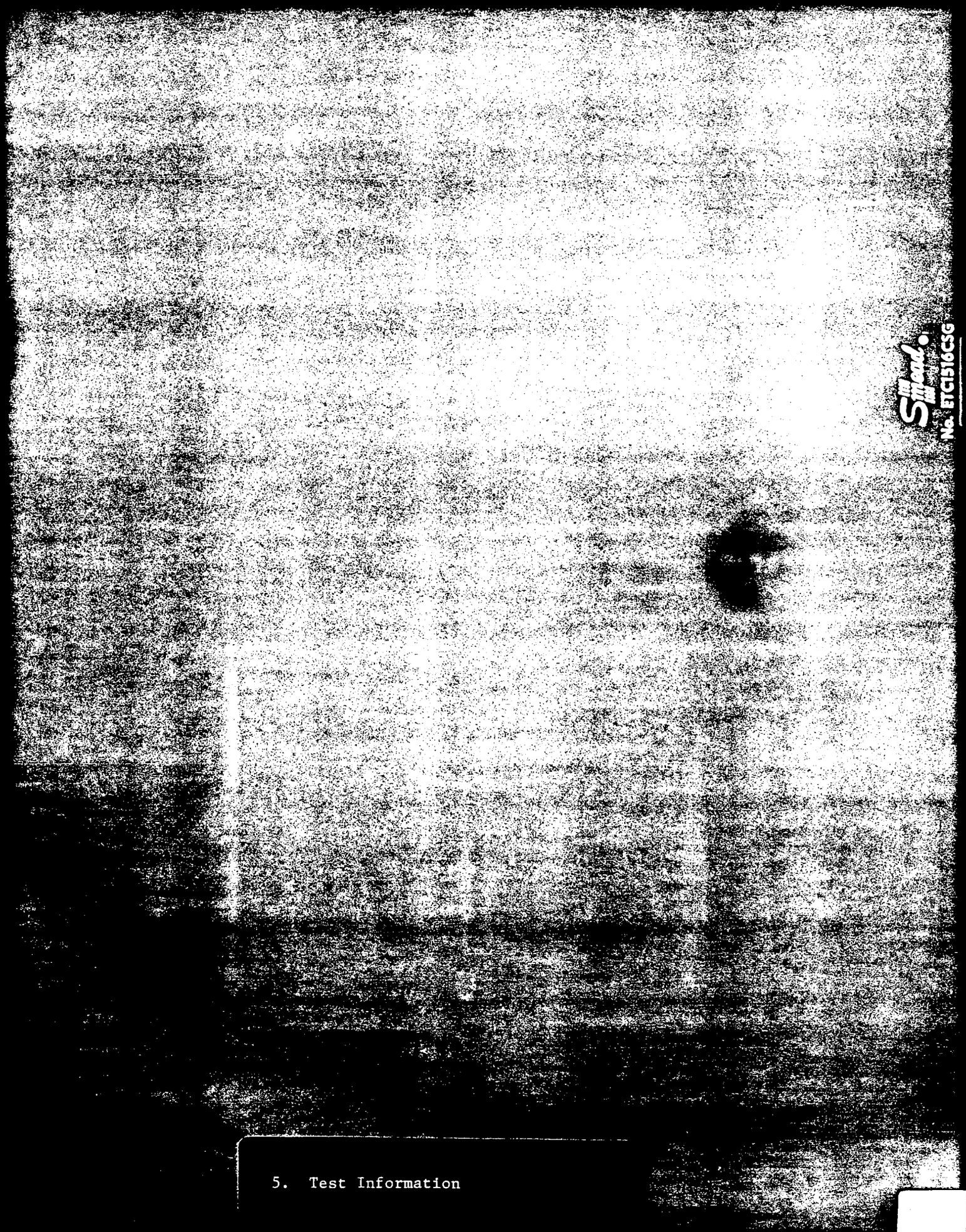

5. Test Information

CONFIDENTIAL-SUBJECT TO PROTECTIVE ORDER
KINZER V. REMINGTON

Report No. _____

RESEARCH TEST & MEASUREMENT LAB WORK REQUEST

AREA OF TESTING

- X Developmental
- ___ Design Acceptance
- ___ Pre-Pilot
- ___ Pilot
- ___ Production Acceptance
- ___ Safety Related
- ___ Competitive Evaluation
- X New Design
- ___ Design Change
- ___ Plant Assistance
- ___ Litigation
- ___ Warehouse Audit
- ___ Cost Reduction
- Stake _____
- ___ Other

FIREARM STAT'S.

MODEL: New Bar Cotton Rifle
CAL or GAGE: 30-06 300 Wby
BARREL TYPE: Sport/Mag
PROOFED: YES ___ NO ___

REPORT REQ'D.

FORMAL ___
TEST RESULTS ONLY X

DATE REQUESTED: 5-6-88
DATE NEEDED BY: _____
REQUESTED BY: F. Martin
WORK ORDER NO: _____

TEST TYPE

- X Strength Test
- ___ Function Test
- ___ Accuracy Test
- ___ Ammunition Test
- ___ Environmental Test
- ___ Customer Complaint
- ___ Dry Cycle Test
- ___ Measurements
- ___ Endurance Test
- ___ Photo/Video
- ___ Other _____

EXPLAIN IN DETAIL THE REASON FOR THIS TEST:

Step 1 - Ultimate Strength Test - 4 - Guns Supplied Proof All Guns Initially

Step 2 - Load Ammo And Plug Bores 1100 Grs Total Bullet Wgt. - 5 220 Gr Bullets 4 In Bore

GUNS REQUIRED:

NOTE: NO firearms or parts will be tested in the Labs unless they are accompanied by a Work Request, and both are delivered to the Labs by the designer or engineer. All Work Requests are to be filled out in detail. No Exceptions.

DATE COMPLETED: _____
TEST COMPLETED BY: _____
REPORT DATE: _____

CONFIDENTIAL-SUBJECT TO PROTECTIVE ORDER
KINZER V. REMINGTON

Skip

NBAR - SCOPE MOUNT TESTING

4-22 - 4-26 | 4-29 - 5-3 | 5-6 - 5-10 | 5-13 - 5-17 | 5-20 - 5-24

----*--*--* Make Injection Mold
(Spray Mold: Prototypes)

----*--*--*--*--* Injection Mold Scope Mounts

----*--*--* Secondary Machine Scope Mounts

----*--* Run Full Round Receivers
Production (4 long action)

----*--*--*--*--* Mill Integral Scope Base
Cuts in Receivers

----*--* Heat Treat Receivers

----*--* Assembly Receivers
in Guns

----*--*--*--*--*--*--*--*--* Purchase and Delivery of
Ruger M/77 RS for Test

----*--*--*
Shoot Accuracy
Shoot 200 Rounds
Re-shoot for
Accuracy
(NBAR vs. Ruger M/77)

FHS:sps
4/17/85

SCOPE MOUNTS TESTING:

- (2) NBAR SCOPE MOUNTS (M700 8MM REM MAG) & RUGER M/77 SHOT FOR ACCURACY
- SHOOT 200 RDS. – JACK SHOOTING
- RESHOOT FOR ACCURACY

CONFIDENTIAL-SUBJECT TO PROTECTIVE ORDER
KINZER V. REMINGTON

RD-65-6

REMINGTON ARMS COMPANY, INC.

INTER-DEPARTMENTAL CORRESPONDENCE

Remington PETERS

"CONFINE YOUR LETTER TO ONE SUBJECT ONLY"

xc: W.L. Tomek
File

July 16, 1985

Responsibility: F.H. Smith

Program: NBAR Integral Scope Mounts

Objective: To provide a reliable, aestheticly pleasing scope mount design that is unique to Remington.

Goals:
- o Mounts must securely hold scope against magnum recoil for at least 100 rounds.
- o Must be easily installed and removed
- o Must be compatable with 1" dia. scope bodies
- o Marketing approved aesthetics

Stake:
- o Improved customer price/value relationship

Status: The design is complete and injectalloy components are being fabricated.

Program Timing:
- o Check CV drawings
- o Fabrication complete
- o Recoil endurance/accuracy testing
- o Redesign
- o Design acceptance testing

RSM:sps RSM

CONFIDENTIAL-SUBJECT TO PROTECTIVE ORDER
KINZER V. REMINGTON

2) ORGANIZATION/BUDGET PLAN — FIVE YEAR FORECAST

Budget Year	:	1982	1983	1984	1985	1986
Assignable Manyears *	:	4	4	4	4	4
Funding (1982 $M)	:	430	430	430	430	430

* Plus 0.5 Manyears support from Test Lab and N/C Shop personnel.

HARTMAN

CONFIDENTIAL-SUBJECT TO PROTECTIVE ORDER
KINZER V. REMINGTON

ECONOMIC ANALYSIS AND SHARE ANALYSIS - 1983

Case 1 - Do Nothing
Case 2 - Add Sporter

	ADL		BDL		Chassis		Sporter		BDL Specials		Total Line		1982
	Case 1	Case 2	Case 1	Case 2	Case 1	Case 2	Case 1	Case 2	Case 1	Case 2	Case 1	Case 2	AA Fest.
Volume (M)	14	10	30	24	8	8		30	13	13	65	85	60.5
Suggested Retail/Unit	359.95	369.95	429.95	439.95	390.05	409.95		419.95	469.95	469.95			
Net Selling Price/Unit	223.17	229.37	266.07	272.77	247.07	264.17		260.37	285.17	291.37			
Gross Sales (M)	3 124.4	2 293.7	7 997.1	6 546.5	1 983.8	2 033.4		7 811.1	3 707.2	3 787.5	16 813.6	22 478.5	20 472.0
Less:													
Excise Tax @ 11%	309.6	227.3	793.5	648.8	196.6	201.6		774.1	367.4	375.3	1 666.1	2 227.0	2 029.0
Cash @ 3.0% **	84.4	62.0	216.1	176.9	53.0	55.0		211.1	100.2	102.4	454.4	607.4	550.0**
Net Sales	2 730.4	2 004.4	6 988.5	5 720.8	1 733.6	1 776.8		6 826.9	3 239.5	3 310.1	14 692.0	19 638.1	17 613.0
Per Unit	195.03	200.44	232.95	238.37	216.70	222.1		227.63	249.19	254.62	226.03	231.04	310.80
Cost of Sales													
Variable	1 643.0	1 173.4	3 084.5	3 188.5	880.9	880.9		4 030.1	1 939.8	1 939.8	8 448.2	11 212.7	9 805.0
Fixed	903.1	492.9	1 936.6	1 185.1	816.2	395.4		1 480.8	809.5	841.9	4 195.4	4 196.5	3 968.0
Total	2 546.1	1 666.3	5 021.1	4 373.6	1 697.1	1 276.3		5 510.9	2 779.3	2 781.7	12 643.6	15 408.2	13 763.0
Per Unit	181.86	166.63	167.37	182.23	174.64	159.54		183.70	213.79	198.55	194.52	181.27	170.07
Other Costs													
Variable	177.0	126.1	440.9	361.9	101.8	101.8		425.1	208.8	208.8	928.5	1 213.7	1 077.0
Fixed	598.9	327.5	1 284.7	765.5	342.4	261.6		982.6	556.5	425.1	3 782.5	2 782.5	3 020.0
Total	775.9	453.6	1 725.6	1 127.4	444.2	363.0		1 407.7	765.3	633.9	3 711.0	3 996.2	3 703.0
Per Unit	55.42	45.36	57.52	47.39	55.53	45.38		46.92	58.87	48.76	57.09	47.01	45.99
Total Costs	3 322.0	2 119.9	7 646.7	5 511.0	1 841.3	1 639.3		6 918.6	3 544.6	3 415.0	16 354.6	19 404.4	17 465.0
Per Unit	237.28	211.99	254.89	229.62	230.17	204.91		230.62	272.66	247.31	251.61	228.29	310.06
Pretax Earnings	(591.6)	(115.5)	(658.2)	209.8	(107.7)	137.5		(92.7)	(305.1)	95.1	(1 662.6)	233.7	148.0
Per Unit	(42.26)	(1.16)	(21.94)	8.74	(13.40)	17.14		(3.09)	(23.47)	7.32	(1.95)	2.75	1.84
% PTE	(21.7)	(5.8)	(9.4)	3.7	(6.2)	7.7		(1.4)	(9.4)	3.9	(11.4)	1.2	0.8

Market Share - (M Units)	1978	1981	Estimate 1982	1983 No Change	1983 Proposed
Total Market	340	290	290	290	290
Remington	124	93	79	66	86
% Share	36.4	32.1	27.6	22.0	29.0

*1982 Estimated Cost
Escalated @ 6.0% per G. Campbell.
(Basic Cost provided by W. J. Thacker, Jr.
** Cash @ 4.5% 1982 only.

R2539689

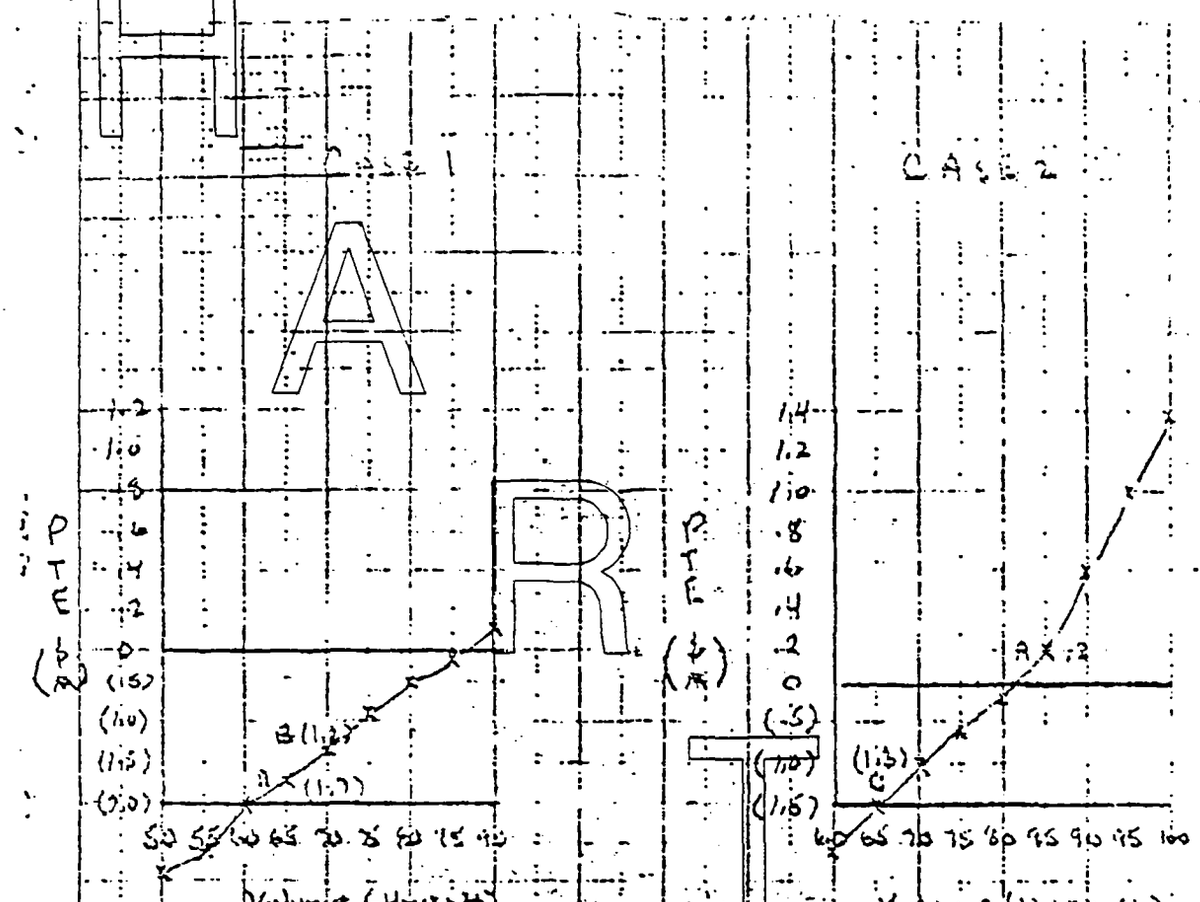

LEGEND

A - CASES PROJECTED

B - CASE 1 @ CASE 2 PRICES: VOLUME AND MIX SAME 65M UNITS

C - CASE 2 @ CASE 1 VOLUMES - 20M UNIT REDUCTIONS IN SPORTER - PRICES @ CASE 1

X - VOLUMES @ 5M UNIT INCREMENTS ± FROM BASE CASE 1 AND 2. MIX CONSTANT BOTH CASES.

CONFIDENTIAL-SUBJECT TO PROTECTIVE ORDER
KINZER V. REMINGTON

CONFIDENTIAL-SUBJECT TO PROTECTIVE ORDER
KINZER V. REMINGTON

SENSITIVITY DETAIL

CASE 1					CAST 2				
QTY.	NET SALES	VARIABLE	FIXED	PTE	QTY.	NET SALES	VARIABLE	FIXED	PTE
50	11,301.5	7,212.5	6,977.9	(2.9)	60	13,862.4	8,771.4	6,977.9	(1.9)
55	12,431.7	7,933.8		(2.5)	65	15,017.6	9,502.4		(1.5)
60	13,561.8	8,655.0		(2.1)	70	16,172.8	10,233.3		(1.0)
65	14,692.0	9,376.7		(1.7)	75	17,328.0	10,964.3		(0.6)
70	15,822.1	10,097.5		(1.3)	80	18,483.2	11,695.2		(0.2)
75	16,952.3	10,818.8		(0.9)	85	19,638.4	12,426.3		0.2
80	18,082.4	11,540.0		(0.5)	90	20,793.6	13,157.1		0.6
85	19,212.6	12,261.3		(0.1)	95	21,948.8	13,888.1		1.0
90	20,342.7	12,982.5		0.3	100	23,104.0	14,619.0		1.4

R2539691

PREFERRED DESIGN

PART NO. & PART NAME	CAPITAL	S.L. + T.E. STD. COST.	MATL. OR PURCHASE COST	TOTAL STD. COST.	FACTORY COST.
BARREL ASSY COMPLETE 1		.534	8.311	8.845	50.563
BARREL ASSY 1	$2000	468 898 1.367	4.633	6.000	27.24
BARREL (LONG ACTION) 1	$3000	272 1.533 1.805	4.120	5.925	16.7[illegible]
BLANK 1		1.976	(4.120)	(6.096)	19.9[illegible]
RECEIVER STD 2 FMS		5.766 STD. 3.762 FMS	2.60	8.366 STD 6.362 FMS	124.43 STD 20.358 FMS
BLANK STD 1,938,500 FMS 400,000			(2.60)		(3.[illegible])
BASE SCOPE ?		.007	1.04	1.047	[illegible]
BLANK ?	33,500		(1.04)		
PLATE SCOPE ?		.007	.26	.267	.403
BLANK ?	20,000		(.26)		
SCREW SCOPE ?		.007	.31	.317	.477
BLANK ?	33,000		(.31)		
TOP SCOPE ?		.007	.68	.687	1.03[illegible]
BLANK ?	26,500		(.68)		
TOTAL	$113,000	.028	2.290	2.318	3.[illegible]

CONFIDENTIAL-SUBJECT TO PROTECTIVE ORDER
KINZER V. REMINGTON

PREFERED DESIGN

2-27-71

8-20-[illegible]

PT NO. & PART NAME	CAPITAL	S.L. + T.E. STD. COST	MATL OR PURCHASE COST	TOTAL STD. COST	FACTORY COST	F
SKD-3553 BOLT ASSY	12,000	1.693	[illegible]	[illegible]	[illegible]	
EXP-1114 BOLT BODY ASS'Y	109,300	2.409	1.451	3.860	[illegible]	
.20200 BOLT BODY		059	.294	.353	.479	
.18493 BOLT BODY BRAZING SWG			.003	.003	.004	
28665 (EXP-1117) .15851 BOLT HEAD		.856	.970	1.826	[illegible]	
.32820 BLANK		(.167)	(.970)		2.069	
.18758 BOLT PIN			.033	.033	.038	
.17011 EJECTOR WASHER			.069	.069	.080	
EXP-1265 BOLT HANDLE	[illegible]	.239	2.06	[illegible]	2.947	
BLANK	13,300		(2.06)		[illegible]	
20185 BOLT HANDLE BRAZING SHIM			.034	.034	.042	
17017 EJECTOR		.0026	.166	.169	.199	
13974 BLANK			(.166)		.192	
17676 EJECTOR PIN		.0006	.006	.0066	.008	
.91802 BLANK			(.006)		.007	
17019 EJECTOR SPRING			.020	.020	.023	
EXP-1111 EXTRACTOR	16,000	.012	.208	.220	[illegible]	
BLANK.			(.208)		[illegible]	
TOTAL	145,600	5.271	[illegible]	[illegible]		

CONFIDENTIAL-SUBJECT TO PROTECTIVE ORDER
KINZER V. REMINGTON

PREFERED DESIGN

ART NO. & PART NAME	CAPITAL	S.L. + T.E. STD. COST.	MATL OR PURCHASE COST.	TOTAL STD. COST.	FACTORY COST.
FIRING PIN ASSY.		.770 ~~.817~~	3.567 ~~[illegible]~~	4.337 ~~[illegible]~~	4.851
EXP-1261 - BOLT PLUG	$21,000	.350	.85	1.200	1.8[illegible]
BLANK	PURCH.		(.85)		
EXP-1267 FIRING PIN	$2000	.276	.89	1.166	$1.[illegible]
BLANK	PURCH		(.89)		
EXP-1264 FIRING PIN HEAD	$2000	.09	.68	.77	$1.271
BLANK	PURCH		(.68)		
-17058 MAIN SPRING	PURCH		.113	.113	.131
S BOLT STOP	PURCH	.020	.15	.170	.255
BLANK	$24,000		(.15)		
.24475 BOLT STOP PIN			.032	.032	.037
BOLT STOP SPRING			.083	.083	.096
A-3552 BOLT LOCK DETENT SPRING		.003	.300	.0[illegible]	.038
EXP-1266 BOLT LATCH	PURCH.	.020	.300	.300	.450
BLANK	$18,000		(.28)		
KB-3549 BOLT LATCH PLUNGER		.006	.100	.106	.159
BLANK	PURCH.		(.100)		
KB-3554 PIN		.005	.030	.035	.053
BLANK	PURCH		(.030)		
FIRING PIN DETENT BALL (USED)	PURCH.		.039	.039	.042
TOTAL	$67,000	1.587			

CONFIDENTIAL-SUBJECT TO PROTECTIVE ORDER
KINZER V. REMINGTON

PREFERED DESIGN

PT NO. & PART NAME		CAPITAL	S.L. + T.E. STD. COST.	MATL OR PURCHASED COST	TOTAL STD. COST.	FACTORY COST.	E
22035 Front Guard Screw	8		.002 .003 .005	.022	.027	.035	
28810 Blank	8			(.022)		(.026)	
TOTAL			.005	[illegible]	.027	[illegible]	
16716 Magazine	8		.006 .024 .030	.550	.580	.732	
17971 Blank	8			(.550)		(.637)	
90951 Magazine Follower	8		.039 .202 .241	2.44	2.681	3.627	
90339 Blank	8			(2.44)		(3.825)	
15677 91133 Magazine Spring	8			.333	.333	.382	
26355 Rear Guard Screw	8		.002 .003 .005	.024	.029	.039	
91908 Blank	8			(.024)		(.028)	
TOTAL			.276	3.347	3.623	4.730	
24475 Sear Pin	4			.032	.032	.037	
Rotary Magazine Box Ass'y			.245		.245	.368	
End Plate		19,500	.045	.160	.205	.308	
Magazine		91,000	.064	.640	.704	[illegible]	
Rotor Pivot		19,500	.053	.160	.213	[illegible]	
Rotor		58,500	.057	.320	.377	[illegible]	
Magazine Lock		13,000	.006	.252	.258	.387	
Blank				(.252)			
Magazine Lock Spring			.003	.108	.111	.167	
Magazine Lock Pin.			.003	.027	.030	.045	
TOTAL		201,500	[illegible]	[illegible]	[illegible]	[illegible]	

CONFIDENTIAL-SUBJECT TO PROTECTIVE ORDER
KINZER V. REMINGTON

PREFERRED DESIGN

5 OF 1
8-20-84

PART NO. & PART NAME	CAPITAL	S.L. + T.E. STD. COST.	MATL OR PURCHASE COST	TOTAL STD. COST.	FACTORY COST.
STOCK ASSY.		15.114	14.580	29.694	68.632
STOCK	8,600				
BUTT PLATE	9,100	.046	.139	.185	272
BUTT PLATE SCREWS		.002	.005	.007	010
BLANK			(.005)		
FORE END TIP.		.058	.059	.117	.257
GRIP CAP		.042	.011	.053	.108
RECOIL PAD.					
RECOIL PAD SCREWS					
BLANK					
92843 STOCK REINFORCING RIVET		.013	.130	.143	.164
92844 STOCK REINFORCING WASHER		.003	.030	.033	.038
92854 STOCK REINFORCING PLATE (2)		.008	.050	.058	.067
15358 SWIVEL SCREW, FRONT			.125	[illegible]	.145
15358 SWIVEL SCREW, REAR			.125	[illegible]	.145
26555 SWIVEL ASSY.			.870	[illegible]	1.007
TOTAL	$17,700	15.262		[illegible]	[illegible]
		.024	[illegible]	[illegible]	

OMIT

CONFIDENTIAL-SUBJECT TO PROTECTIVE ORDER
KINZER V. REMINGTON

PREFERRED DESIGN

6 of 7
8-20-84

PART NO. & PART NAME	CAPITAL	S.L. + T.E. STD. COST.	MATL OR PURCHASE COST	TOTAL STD. COST.	FACTORY COST.
SAFETY ASS'Y 5		.068	.960	1.080	1.804
B1 SAFETY LEVER 5	PURCH	.023	.280	[illegible]	.506
SAFETY LEVER BLANK 5	9,100		(.280)		(.468)
SAFETY DETENT 5	9,100	.009	.320	[illegible]	.399
C1 SAFETY ROTOR 5	PURCH	.009	.350	[illegible]	.600
BLANK 5	13,000		(.350)		(.585)
SAFETY LINK (WIRE FORM) 5	4,000	.008	.080	.088	.147
SAFETY RETAINING RING (TRU ARC) 5	PURCH	.003	.020	.023	.038
					1.670 to 1.854
TOTAL	35,200	.120	.960	1.012	
				.515	
C2 SEAR 4	PURCH	.235	.68	.915	1.525
BLANK 4	13,000		(.68)		
SEAR SPRING 4			.012	.012	.014
C4 TRIGGER 4	PURCH.	.400	.73	1.130	1.887
BLANK 4	13,000		(.73)		
TRIGGER SPRING 4	PURCH	.003	.035	.038	.063
D2 TRIGGER ADJUSTING SCREW 4		.009	.018	.027	.045
TRIGGER ADJUSTING SCREW BLANK 4	PURCH		(.018)		
TOTAL	26,000	.647	1.475	2.122	3.538

CONFIDENTIAL-SUBJECT TO PROTECTIVE ORDER
KINZER V. REMINGTON

PREFERRED DESIGN.

8-20-84

PART NO. & PART NAME	CAPITAL	S.L. + T.E. STD. COST.	MATL OR PURCHASE COST	TOTAL STD. COST.	FACTORY COST.	E
TRIGGER GUARD ASSY.		1.743	4.545	6.288	[illegible]	
TRIGGER GUARD SUB ASSY.		1.508	4.270	5.778	[illegible]	
FLOOR PLATE	13,000	.303	1.545	1.848	[illegible]	
BLANK			(1.545)		(1.78[illegible])	
TRIGGER GUARD		.509	2.699	3.208	4.757	
BLANK			(2.699)		(3.125)	
16291- FLOOR PLATE LATCH		.073	.179	.252	.494	
01759- BLANK			(.179)		(.207)	
16451- FLOOR PLATE LATCH PIN		.002	.009	.011	.014	
11943- BLANK			(.009)		(.011)	
16452- FLOOR PLATE LATCH SPRING			.088	[illegible]	.101	
16453- FLOOR PLATE PIVOT PIN.			.026	[illegible]	[illegible]	
		[illegible]	[illegible]	[illegible]	[illegible]	
	$13,000	4.32[illegible]	[illegible]	7.1[illegible]	[illegible]	

FMS.

CONFIDENTIAL-SUBJECT TO PROTECTIVE ORDER
KINZER V. REMINGTON

CONFIDENTIAL-SUBJECT TO PROTECTIVE ORDER
KINZER V. REMINGTON

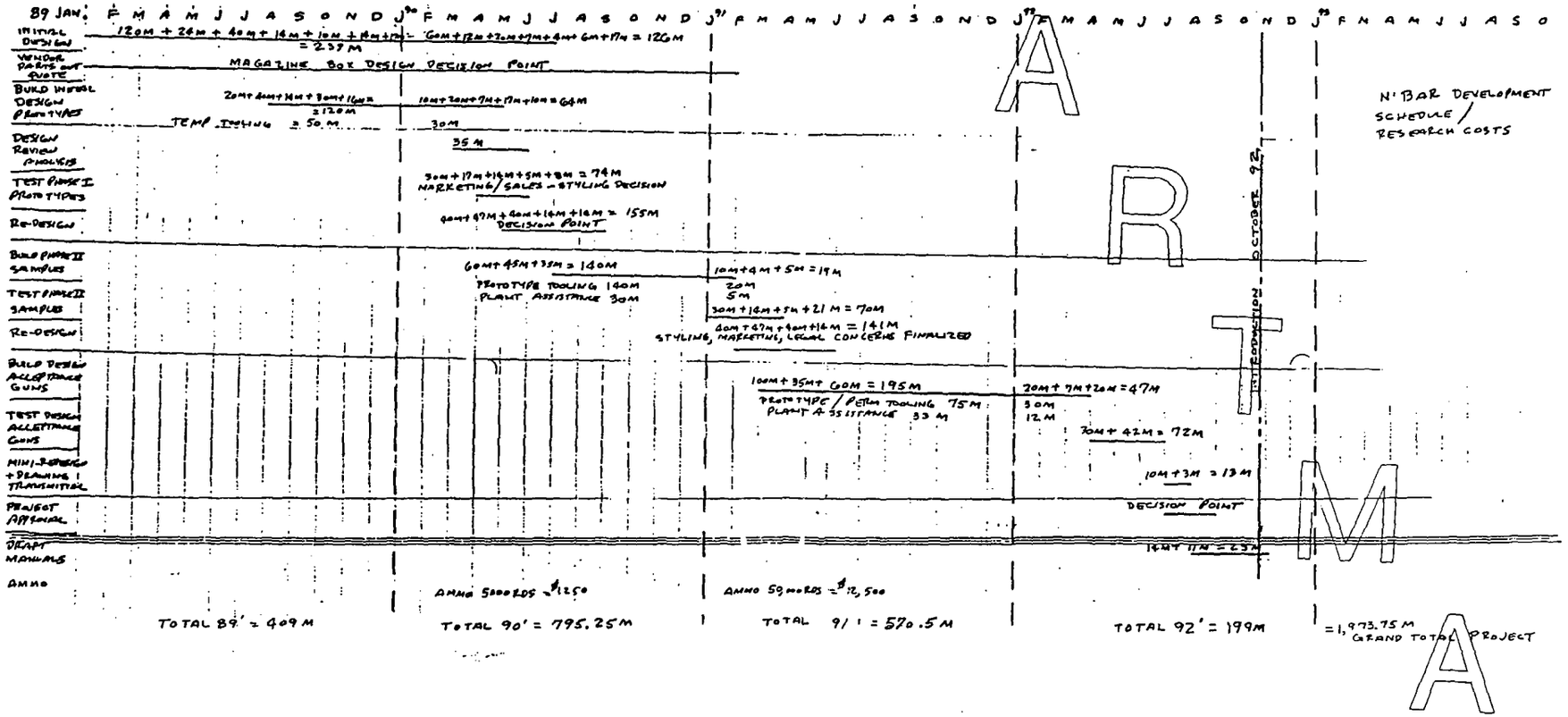

R2539699

CONFIDENTIAL-SUBJECT TO PROTECTIVE ORDER
KINZER V. REMINGTON

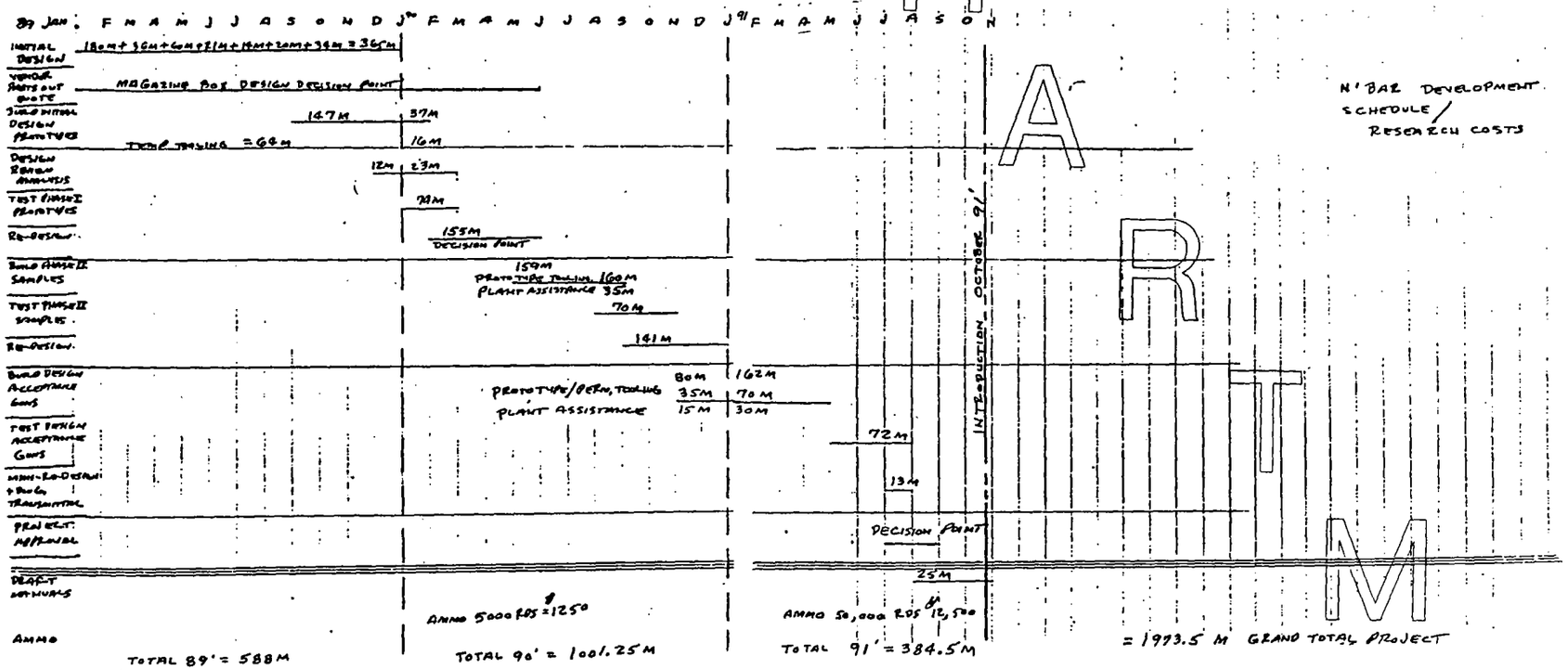

R2539700

CONFIDENTIAL-SUBJECT TO PROTECTIVE ORDER
KINZER V. REMINGTON

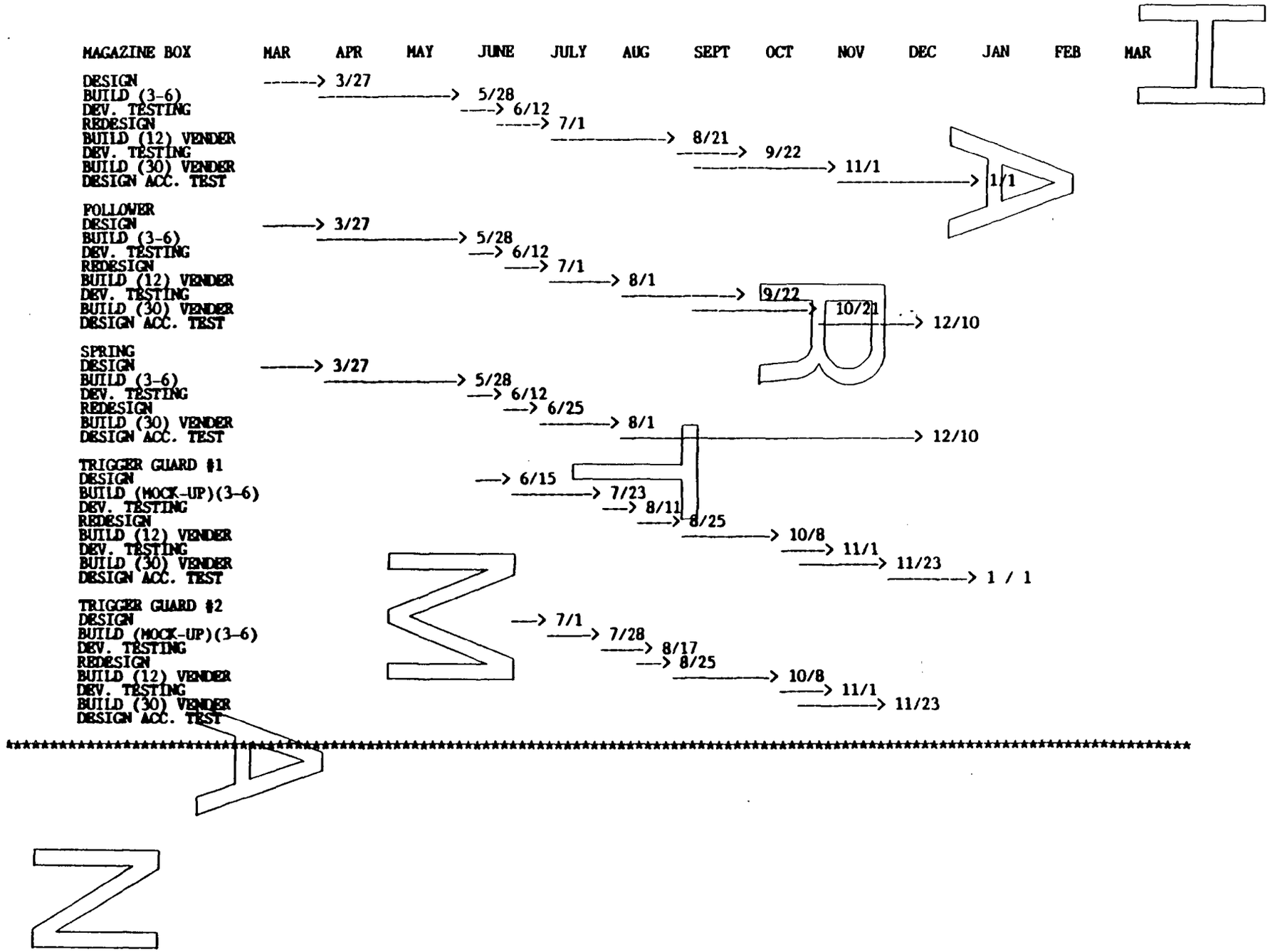

R2539701

HARTMAN

1987 DEVELOPMENT PROGRAMS
FIREARMS

ITEM	BUDGET($000)
APPLIED RESEARCH	250
SLUG BARREL DEVELOPMENT	100
MODEL 870 FUNCTIONAL IMPROVEMENTS	50
NCS	700
NBAR	200
MODELS 870 AND 1100 SMALL GAGE RESTYLE	50
SYNTHETIC STOCKS	150
SINGLE SHOT SHOTGUN	250
LAW ENFORCEMENT/MILITARY	100
10 GAGE MAGNUM	200
LIGHTWEIGHT SHOTGUN RECEIVER	100
MODEL 700 MOUNTAIN RIFLE CALIBER ADDITIONS	100
SHOTGUN PRODUCT IMPROVEMENTS	100
RIFLE PRODUCT IMPROVEMENTS	50
TOTAL NEW PRODUCT DEVELOPMENT	2,400
SHOTGUN BARREL PROCESS DEVELOPMENT	200
TOTAL NEW PROCESS DEVELOPMENT	200

CONFIDENTIAL-SUBJECT TO PROTECTIVE ORDER
KINZER V. REMINGTON

SLUG GUN DEVELOPMENT

JWB
10/13/86

OBJECTIVE: TO INCORPORATE A FUNCTIONAL IMPROVEMENT FOR THE MODELS 11-87, 1100, 870 IN A WAY THAT IS PREFERRABLY RETROFITTABLE TO PREVIOUS PRODUCT, SO THAT REMINGTON WILL OFFER A MORE ACCURATE SLUG GUN, THUS GENERATING ADDITIONAL SALES AND EARNINGS.

CATALOG YEAR: 1988

GENERAL SCHEDULE:
- -WAREHOUSE OCT. 87
- -COMPLETE T&P,INCL. DESIGN VERIFICATION TESTING AUG. 87
- -DESIGN TRANSMITTAL JAN. 87
- -COMPLETE DESIGN ACCEPTANCE TESTING JAN. 15, 1987
- -BUILD 30 PROTOTYPES DEC. 15, 1987
- -COMPLETE DEVELOPMENT TESTING NOV. 15, 1987

ACTION ITEMS:
- -DETERMINE OPTIMUM CHOKE TUBE LENGTH NOV 1
- -DETERMINE OPTIMUM RIFLING RATE NOV 15
- -DETERMINE OPTIMUM DIAMETER NOV. 15

HARTMAN

CONFIDENTIAL-SUBJECT TO PROTECTIVE ORDER
KINZER V. REMINGTON

HARTMAN PROJECT.

1989 2ND HALF.

TOM BAUMAN	FULL TIME	.5	MAN YEARS
KEN ROWLANDS	PART TIME	.25	MAN YEARS.
DESIRED → FRED MARTIN	FULL TIME	.5	MAN YEARS
→ DAVE FINDLAY	PART TIME	.35	MAN YEARS
EARL SEPPALA	FULL TIME	.5	MAN YEARS
TOM PLUNKETT	PART TIME	.1	MAN YEAR

1990

TOM BAUMAN	FULL TIME	1.0	MAN YEAR
KEN ROWLANDS	FULL TIME	1.0	"
FRED MARTIN	PART TIME	.08	"
EARL SEPPALA	PART TIME	.76	MAN YEAR
TOM PLUNKET	PART TIME	.76	MAN YEAR

1991

TOM BAUMAN	FULL TIME	1.0	MAN YEAR
KEN ROWLANDS	PART TIME.	.24	"

CONFIDENTIAL-SUBJECT TO PROTECTIVE ORDER
KINZER V. REMINGTON

HARTMAN

NBAR PROJECT.

1989 2ND HALF.

TOM BAUMAN	FULL TIME	.5	MAN YEARS
KEN ROWLANDS	PART TIME	.25	MAN YEARS.
DESIRED → FRED MARTIN	FULL TIME	.5	MAN YEARS
→ DAVE FINDLAY	PART TIME	.35	MAN YEARS
EARL SEPPALA	FULL TIME	.5	MAN YEARS
TOM PLUNKETT	PART TIME	.1	MAN YEAR

1990

TOM BAUMAN	FULL TIME	1.0	MAN YEAR
KEN ROWLANDS	FULL TIME	1.0	"
FRED MARTIN	PART TIME	.08	"
EARL SEPPALA	PART TIME	.76	MAN YEAR
TOM PLUNKET	PART TIME	.76	MAN YEAR

1991

TOM BAUMAN	FULL TIME	1.0	MAN YEAR
KEN ROWLANDS	PART TIME.	.24	"

CONFIDENTIAL-SUBJECT TO PROTECTIVE ORDER
KINZER V. REMINGTON

CONFIDENTIAL-SUBJECT TO PROTECTIVE ORDER
KINZER V. REMINGTON

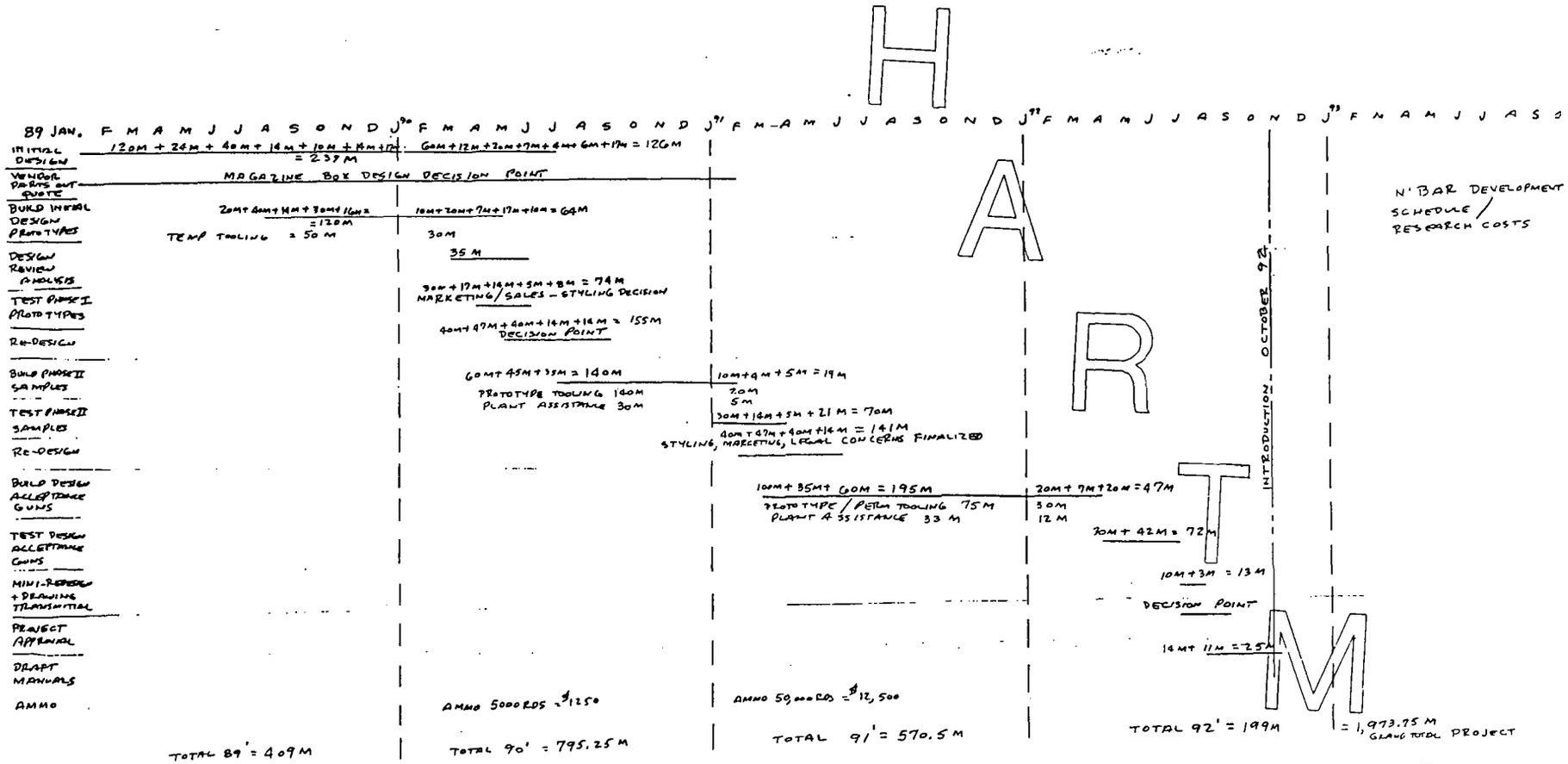

R2539706

CONFIDENTIAL-SUBJECT TO PROTECTIVE ORDER
KINZER V. REMINGTON

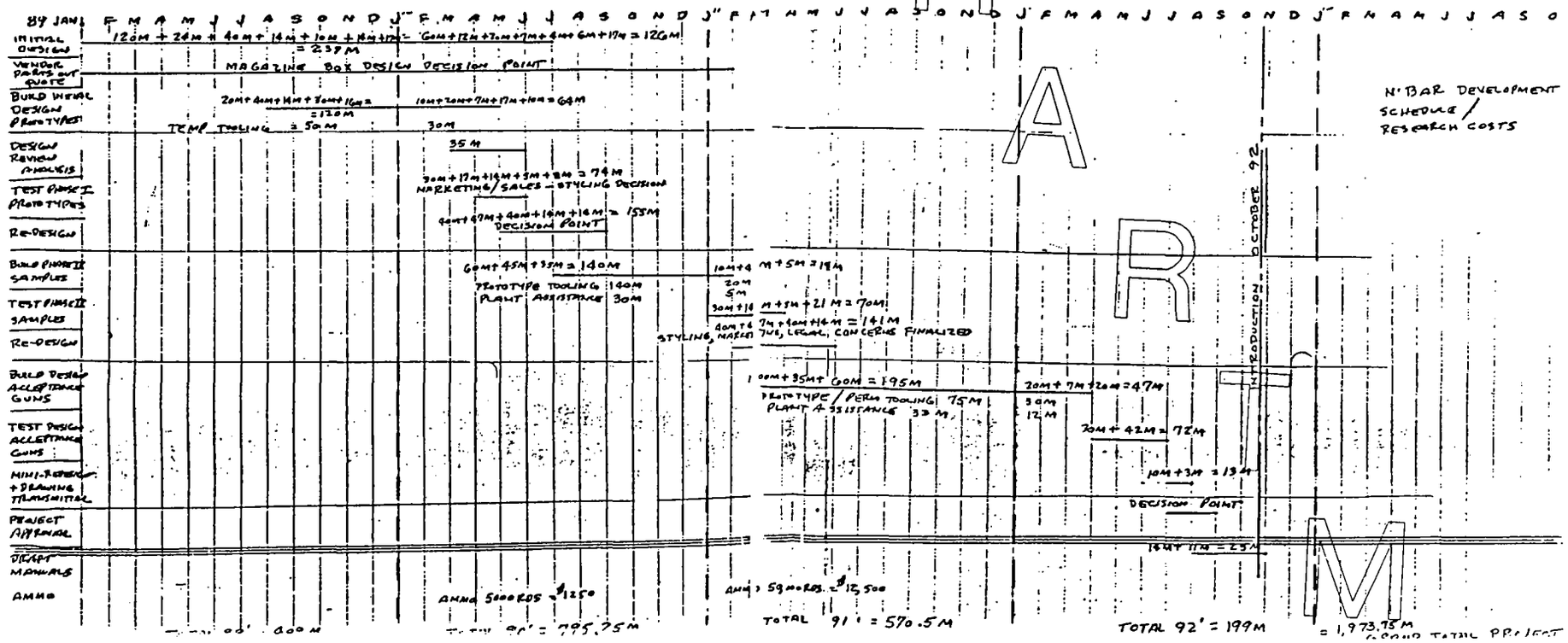

R2539707

CONFIDENTIAL-SUBJECT TO PROTECTIVE ORDER
KINZER V. REMINGTON

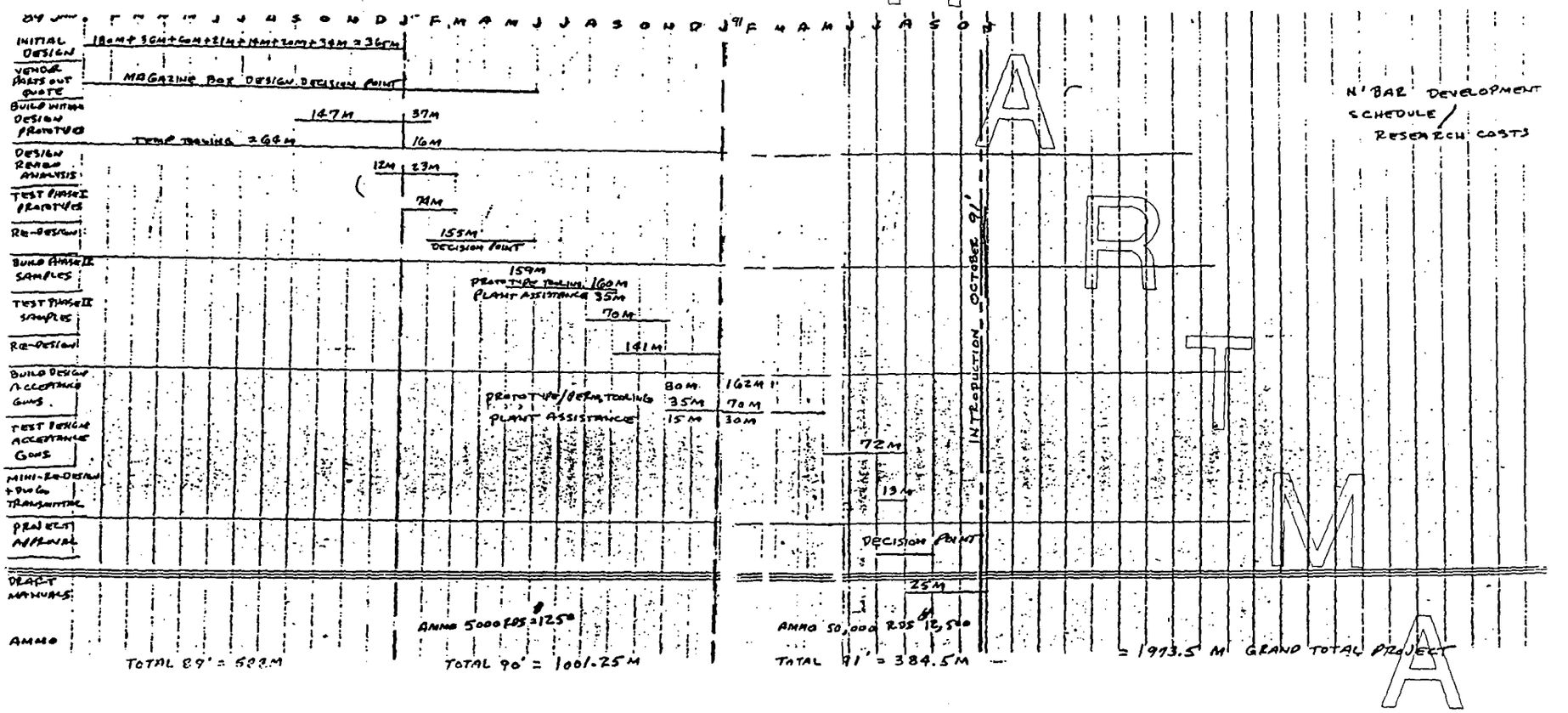

R2539708

ITEMS → FROM STAFF MTG. 1-3-90

The purpose of the New Bolt Action Rifle (N'BAR) is to offer a replacement for the M/700 'BDL' Rifle currently being produced. The new design parameters will include: ALSO SWS USE

- Detachable Magazine Box METAL MATL. PRING IS NOT OBJECTIVE WITH M/700 GRETTRO FITTABLE - NO FLOOR PLATE COVER KIT FOR REPLACEMENT IN FIELD
- ~~Improved~~ REDESIGNED Fire Control
  - ~~No Connector~~
  - Two Trigger Pull Springs (Low Rate Spring)
  - Sealed Fire Control
  - Balanced Trigger
  - Trigger & Sear Block
  - Non-Retrofittable to M/700
- Bolt Lock w/Override (LOOK AT FRED'S BOLT LOCK DESIGN ALREADY ON N'BAR)
- New Scope Mounts - Possibly aftermarket bases and rings. To be offered with rifle package. 2 PC RING SETS
- New Extractor System LEAF SPRING TYPE
- New 'Custom Shop' Barrel Contour ? SIGHT HOLE DEPTH
  - Mountain Rifle Crown NEED DIFF. SIGHTS - T. MCCORMACK
- Improved Bedding/Accuracy Features
  Example:
  - Thicker barrel bracket LOOK AT "MIM"
  - Relieved thread - rec. ~~fit &~~ full hub bearing
- M/700 Receiver to start with same round blank size and cosmetically altered behind front ring of steel over locking lugs. T. MCCORMACK EXTENDED TANG LOOKS BETTER -
- New Wood Stock - Cosmetically altered for fittings/dress up/checkering
- COCKING INDICATOR INDEPENDENT OF BOLT LOCK

The "N'Bar" Design features will initially be produced in five calibers (30-06, 270, 280, 25-06 & 7MM Mag.) during the first year of introduction. These design/cost estimates are based strictly on introduction of these five calibers only in long action standard and mag. calibers only. If at a later point in time other calibers and short actions are added to this program, they will have additional development and introduction costs added.

- LOADED CHAMBER INDICATOR - LOOK AT POING OFF OF EJECTOR OR EXTRACTOR
- BOLT HANDLE SHAPE NEW - T. MCCORMAC
- RECOIL PADS LOOK AT UNCLE MIKE'S.
- FULLY ENCLOSED BOLT PLUG
- LIGHT WEIGHT FIRING PIN

* PROCESS - CONTACT TO SEE IF HANG ANY PROBLEM AREAS IN PRODUCING M/700 AS CURRENTLY EXISTS

CONFIDENTIAL-SUBJECT TO PROTECTIVE ORDER
KINZER V. REMINGTON

2. Schedules/Strategy/Priorities and Cost Data

CONFIDENTIAL-SUBJECT TO PROTECTIVE ORDER
KINZER V. REMINGTON

CONFIDENTIAL

NEW BOLT ACTION RIFLE DEVELOPMENT SCHEDULE

28-JAN-1988 08:51:25 AM

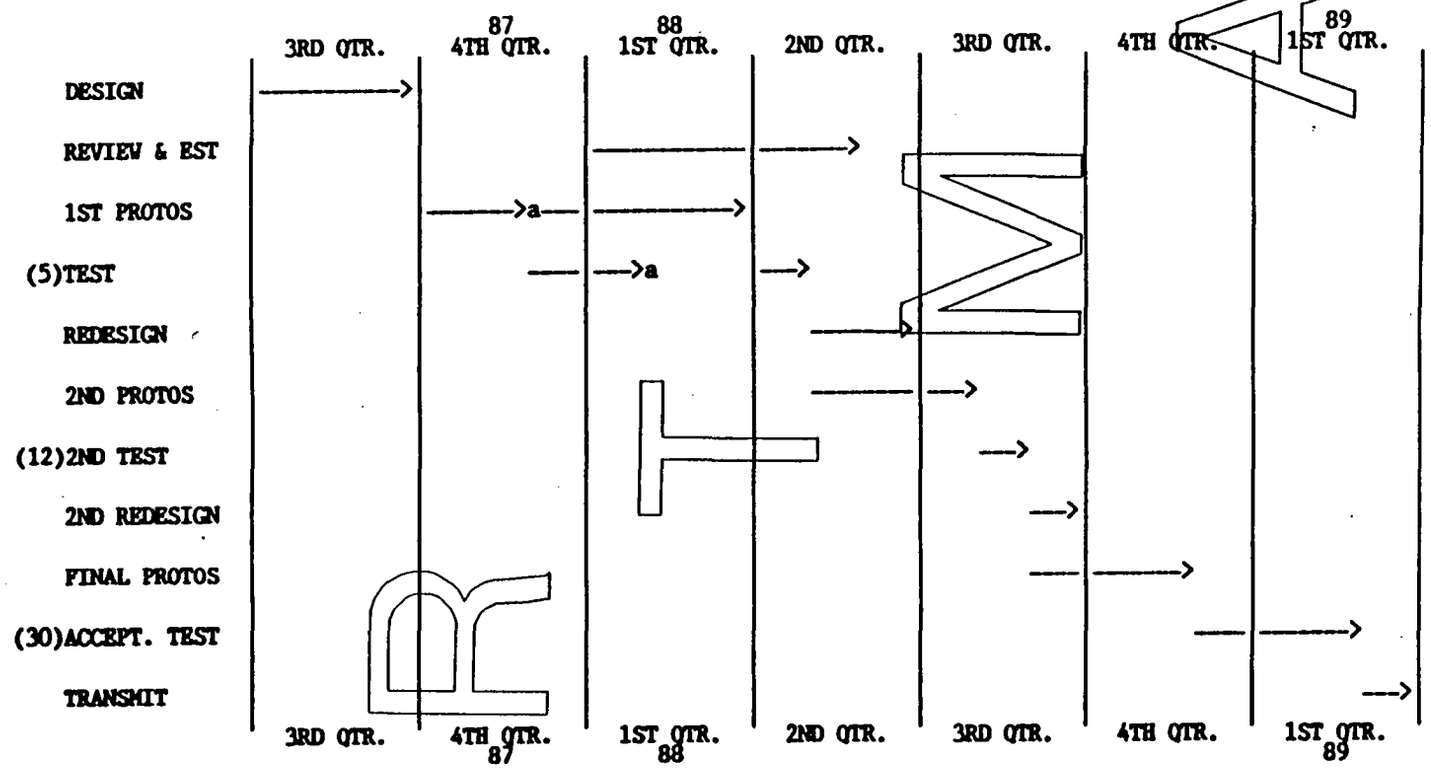

a)Schedule was revised due to priority conflicts with MAG 10.

RAJ

THIS SCHEDULE DOES NOT INCLUDE BRENNAN BARREL TECHNOLOGY

CONFIDENTIAL

R2539711

CONFIDENTIAL-SUBJECT TO PROTECTIVE ORDER
KINZER V. REMINGTON

NEW BOLT ACTION RIFLE DEVELOPMENT SCHEDULE

27-JAN-1988 01:13:31 PM

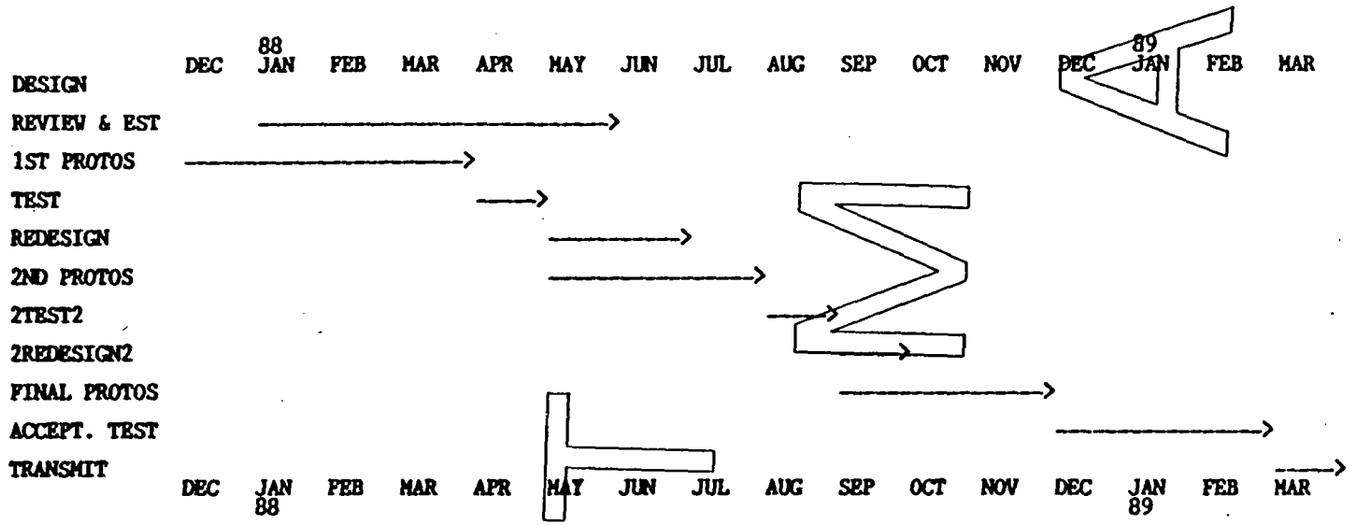

This schedule has been revised due to priority conflict with MAG 10 and DOES NOT INCLUDE BRENNAN TECHNOLOGY.

CONFIDENTIAL-SUBJECT TO PROTECTIVE ORDER
KINZER V. REMINGTON

R2539712

HARTMAN

NBAR 88

1990 NEW PRODUCTS STATUS CODE CONVERSION SHEET

A = Product Specifications.

B = High Spot volumes, pricing, design costs, production costs, project timing.

C = High Spot economics and machine capacities.

D = Research design and test phase.

E = Engineering estimate on advance prints.

F = Final economics.

G = Project approval.

H = Transmittal of final design.

I = Process records, MRP structures and routings, Trial & Pilot schedule, tentative Production schedule, tool-up for T&P and 3 months of production.

J = Trial and Pilot.

K = R & D verification testing of Trial and Pilot guns.

L = Process revisions.

M = Finalize Production Schedule.

N = Forecast warehouse.

O = Desired warehouse.

Revised
3/13/89
TCD

CONFIDENTIAL-SUBJECT TO PROTECTIVE ORDER
KINZER V. REMINGTON

June 20, 1989

CONFIDENTIAL

RESEARCH DEVELOPMENT COSTS
FOR
NEW BOLT ACTION RIFLE (NBAR)

RESEARCH DEVELOPMENT COST ESTIMATE: Jan.'89 thru Oct.'91

1.	Initial Design	=	365 M
2.	Build Initial Design Prototype Guns(3)	=	184 M
	- Preliminary Prototype Tooling - temporary	=	80 M
3.	Design Review Team Analysis	=	35 M
4.	Test Phase I Prototypes	=	74 M
5.	Redesign After Phase I Test	=	155 M
6.	Build Phase II Design Samples (15)	=	159 M
	- Prototype Tooling	=	160 M
	- Plant Assistance	=	35 M
7.	Test Phase II Samples	=	70 M
8.	Redesign After Phase II Testing	=	141 M
9.	Build Design Acceptance Guns (30)	=	242 M
	- Prototype/Permanent Tooling	=	105 M
	- Plant Assistance	=	45 M
10.	Test Design Acceptance Guns	=	72 M
11.	Minor Redesign & Transmittal To Production	=	13 M
12.	Draft Manual	=	25 M
13.	Test Ammunition Cost 55,000 Rounds (5,000 Rds 1990 x .25) (50,000 Rds 1991 x .25)	=	14 M
	TOTAL DEVELOPMENT COST (1989 DOLLARS)	=	**1,974 M**

RESEARCH MANPOWER ESTIMATE: May'89 thru Oct.'91

1.	Research Engineer	=	4.94 man years
2.	EDL Engineer	=	1.03 man years
3.	CAD Designer	=	1.90 man years
4.	CAD Detailer	=	1.74 man years
5.	Draftsman	=	.25 man years
6.	Model Shop Personnel	=	4.18 man years
7.	N/C Programmer	=	2.08 man years
8.	Test Lab Personnel	=	2.50 man years

TGB:cap
6/20/89

CONFIDENTIAL-SUBJECT TO PROTECTIVE ORDER
KINZER V. REMINGTON

The purpose of the New Bolt Action Rifle (N'BAR) is to offer a replacement for the M/700 'BDL' Rifle currently being produced. The new design parameters will include:

- o Detachable Magazine Box
- o Improved Fire Control
  - No Connector
  - Two Trigger Pull Springs (Low Rate Spring)
  - Sealed Fire Control
  - Balanced Trigger
  - Trigger & Sear Block
  - Non-Retrofittable to M/700
- o Bolt Lock w/Override
- o New Scope Mounts - Possibly aftermarket bases and rings. To be offered with rifle package.
- o New Extractor System
- o New 'Custom Shop' Barrel Contour
  - Mountain Rifle Crown
- o Improved Bedding/Accuracy Features
  Example:
  - Thicker barrel bracket
  - Relieved thread - rec. fit & full hub bearing
- o M/700 Receiver to start with same round blank size and cosmetically altered behind front ring of steel over locking lugs.
- o New Wood Stock - Cosmetically altered for fittings/dress up/checkering

The "N'Bar" Design features will initially be produced in five calibers (30-06, 270, 280, 25-06 & 7MM Mag.) during the first year of introduction. These design/cost estimates are based strictly on introduction of these five calibers only in long action standard and mag. calibers only. If at a later point in time other calibers and short actions are added to this program, they will have additional development and introduction costs added.

- Initial Design **Jan.'89 - Dec.'89**

This includes preliminary experimental development work, sketches, scenarios, layouts, design, computer modeling, detailing and checking. This design will be a redesign of the existing M/700 Rifle currently in our line, only in those areas so stated above in the design parameters section. Short actions and additional calibers will be considered during initial design to allow them to be compatible for design inclusion at a later time. Personnel required to accomplish this will include: one Research Engineer full time, one Cad Designer and one CAD Detailer, and one Research Engineer 50% of time, as well as some part time help from one EDL Engineer, Model Maker, N/C Programmer & Tester.

CONFIDENTIAL-SUBJECT TO PROTECTIVE ORDER
KINZER V. REMINGTON

- Send Vendor Parts Out For Manufacturability and Quotation Estimate **Jan.'89 - May'90**

Early vendor consultation and input is required due to many parts for detachable magazine box, fire control, scope mounts and extractor being vendor supplied parts with long lead times and vendor development input requirements for the design. 'High spot' estimates will be pursued early to determine feasibility of producing at a competitive cost. We will also look at after market products already developed, such as quick klip for a detachable magazine box and numerous scope mount/ring manufactures. A decision will have to be made at this time for project direction to go with a total Remington design magazine box or after market adaptation.

- Build Initial Design Prototype Guns **Sept.'89 - Jan.'90**

At least three prototype guns will be built: one in cal. 30-06 to cover similar calibers of 280, 270, 25-06, one in 7MM Rem. Mag. for Mag. Cal. and one for esthetic evaluation in standard head size caliber. All common parts with M/700 will be procured from the the plant, current inventory. All newly designed parts will be fabricated by Remington where possible or be developed by outside vendors with Engineering/Development assistance from Remington. Personnel required will be: one Research Engineer, one CAD Designer, one CAD Detailer, one N/C Programmer part time and two Model Makers full time, one part time.

- Initiate Design Review Team Analysis **Dec.'89 - Feb.'90**

Their purpose will be to review design at this point and look at design objectively. Input is necessary from Process Engineering, Chemical/Materials Engineering, Arms Service feedback, Legal, as well as other Designers. Each group will review design as to potential 'Roadblocks' and feasibility to produce an acceptable design.

- Test Phase I Prototypes **Jan.'90 - Feb.'90**

The two test prototypes - one standard caliber and one magnum caliber will be preliminary tested as to fit, form and function. These test guns will show up any major or minor design shortcomings prior to building multiple test guns for evaluation of function, accuracy, endurance. Testing will consist of dry firing/cycle, live firing, function and accuracy. Extended testing of one or both guns may be desired at this time depending on preliminary functioning results.

CONFIDENTIAL-SUBJECT TO PROTECTIVE ORDER
KINZER V. REMINGTON

- Test Phase I Prototypes - Cont'd.

A Marketing/Sales Manager Meeting will be held to evaluate styling, aesthetics, features utilizing the third prototype gun built. Their decisions will affect time for redesign and rebuild of models for both testing and aesthetics. Personnel required are: one Research Engineer full time, part time allowances for one EDL Engineer, one Model Maker, one CAD Designer and one Tester.

- Redesign (Decision Point) Feb.'90 - May'90

Redesign begins as soon as problems arise in Phase I assembly or testing, and continues through Phase I Testing. Depending on the extent and nature of parts requiring redesign as a result of testing, Marketing, Legal or Design Review Team recommendations, will greatly affect straight forward progress or delays for redesign, reevaluation and retesting. Depending on how much and how many components need attention will constitute a need for additional personnel such as: one Research Engineer, one EDL Engineer, one CAD Designer, one CAD Detailer, one Model Maker full or part time. Styling, stock design, weight, balance, safety will need to be addressed at this phase. Also, high spot economics of the whole program will need to be completed at this time, and evaluated to determine project feasibility and path forward or redesign.

- Build Phase II Design Samples May'90 - Aug.'90

A total of 15 design sample guns will be built (3 of each caliber) for this Phase II. The majority of the design, legal, and styling questions will be resolved during this phase. As many vendor sample prototype parts as are available, will be used. Other non-vendor parts will be made by Production, Model Shop or N/C Shop. Ongoing vendor visits will be required to consult and fabricate test sample parts from vendor temporary tooling. Some in-house finishing of these vendor components will be necessary by the Model Shop or N/C. Personnel required to implement this Phase II are: four Model Makers and two Engineers will be required full time, one N/C Programmer full time.

- Test Phase II Design Samples Aug.'90 - Oct.'90

These design sample guns will be tested for function, endurance, strength, blow/up, crud and temperature extreme tests, safety performance, dry firing and field function. Two 30-06 and two 7MM Rem. Mag. guns will be subjected to an intentional abuse test. This may constitute some design changes or modification as deemed necessary from test results. Personnel required are: one Engineer and two testers will be required full time and one Model Maker and N/C Designer part time.

CONFIDENTIAL-SUBJECT TO PROTECTIVE ORDER
KINZER V. REMINGTON

- Mini Redesign and Drawing Transmittal July'91

By this phase of development, the design is firm and no major setbacks should occur. Only minor changes or updates should take place. Changes will be limited to process updates, improving endurance, cost effectiveness, and improved functionality only on parts found to be problem areas from previous testing. Initial transmittal of Research Model drawings and specifications takes place at this time. Personnel required are: one Engineer and one CAD Draftsman full time.

- Project Approval (Decision Point) July'91 - Aug.'91

During this period, final management approval of the design is given and money is released to begin production tooling. All pertinent economics and production process estimates will be completed for this project approval report.

- Draft Manuals Aug.'91 - Oct.'91

This involves development of text and illustrations for the owners manuals and instruction booklets and field service manuals. This will be prepared in conjunction with a commerical printer. Personnel required are: one Engineer and one Draftsman part time with input required from Legal Department and Customer Service.

HARMAN

- Mini Redesign and Drawing Transmittal July'91

By this phase of development, the design is firm and no major setbacks should occur. Only minor changes or updates should take place. Changes will be limited to process updates, improving endurance, cost effectiveness, and improved functionality only on parts found to be problem areas from previous testing. Initial transmittal of Research Model drawings and specifications takes place at this time. Personnel required are: one Engineer and one CAD Draftsman full time.

- Project Approval (Decision Point) July'91 - Aug.'91

During this period, final management approval of the design is given and money is released to begin production tooling. All pertinent economics and production process estimates will be completed for this project approval report.

- Draft Manuals Aug.'91 - Oct.'91

This involves development of text and illustrations for the owners manuals and instruction booklets and field service manuals. This will be prepared in conjunction with a commerical printer. Personnel required are: one Engineer and one Draftsman part time with input required from Legal Department and Customer Service.

HARMAN

May 5, 1989

CONFIDENTIAL

RESEARCH DEVELOPMENT COSTS

FOR

NEW BOLT ACTION RIFLE (NBAR)

RESEARCH DEVELOPMENT COST ESTIMATE: Jan. '89 thru Oct. '92

1.	Initial Design	=	365 M
2.	Build Initial Design Prototype Guns(3)	=	184 M
	- Preliminary Prototype Tooling - temporary	=	80 M
3.	Design Review Team Analysis	=	35 M
4.	Test Phase I Prototypes	=	74 M
5.	Redesign After Phase I Test	=	155 M
6.	Build Phase II Design Samples (15)	=	159 M
	- Prototype Tooling	=	160 M
	- Plant Assistance	=	35 M
7.	Test Phase II Samples	=	70 M
8.	Redesign After Phase II Testing	=	141 M
9.	Build Design Acceptance Guns (30)	=	242 M
	- Prototype/Permanent Tooling	=	105 M
	- Plant Assistance	=	45 M
10.	Test Design Acceptance Guns	=	72 M
11.	Minor Redesign & Transmittal To Production	=	13 M
12.	Draft Manual	=	25 M
13.	Test Ammunition Cost 55,000 Rounds (5,000 Rds 1990 x .25) (50,000 Rds 1991 x .25)	=	14 M
	TOTAL DEVELOPMENT COST (1989 DOLLARS)	=	1,974 M

RESEARCH MANPOWER ESTIMATE: May '89 thru Oct. '92

1.	Research Engineer	=	4.94 man years
2.	EDL Engineer	=	1.03 man years
3.	CAD Designer	=	1.90 man years
4.	CAD Detailer	=	1.74 man years
5.	Draftsman	=	.25 man years
6.	Model Shop Personnel	=	4.18 man years
7.	N/C Programmer	=	2.08 man years
8.	Test Lab Personnel	=	2.50 man years

TGB:cap
5/05/89

CONFIDENTIAL-SUBJECT TO PROTECTIVE ORDER
KINZER V. REMINGTON

The purpose of the New Bolt Action Rifle (N'BAR) is to offer a replacement for the M/700 'BDL' Rifle currently being produced. The new design parameters will include:

- o Detachable Magazine Box
- o Improved Fire Control
  - No Connector
  - Two Trigger Pull Springs (Low Rate Spring)
  - Sealed Fire Control
  - Balanced Trigger
  - Trigger & Sear Block
  - Non-Retrofittable to M/700
- o Bolt Lock w/Override
- o New Scope Mounts - Possibly aftermarket bases and rings. To be offered with rifle package.
- o New Extractor System
- o New 'Custom Shop' Barrel Contour
  - Mountain Rifle Crown
- o Improved Bedding/Accuracy Features
  Example:
  - Thicker barrel bracket
  - Relieved thread - rec. fit & full hub bearing
- o M/700 Receiver to start with same round blank size and cosmetically altered behind front ring of steel over locking lugs.
- o New Wood Stock - Cosmetically altered for fittings/dress up/checkering

The "N'Bar" Design features will initially be produced in five calibers (30-06, 270, 280, 25-06 & 7MM Mag.) during the first year of introduction. These design/cost estimates are based strictly on introduction of these five calibers only in long action standard and mag. calibers only. If at a later point in time other calibers and short actions are added to this program, they will have additional development and introduction costs added.

- Initial Design **Jan.'89 -June'90**

This includes preliminary experimental development work, sketches, scenarios, layouts, design, computer modeling, detailing and checking. This design will be a redesign of the existing M/700 Rifle currently in our line, only in those areas so stated above in the design parameters section. Short actions and additional calibers will be considered during initial design to allow them to be compatible for design inclusion at a later time. Personnel required to accomplish this will include: one Research Engineer full time, one Cad Designer and one CAD Detailer, 50% of time, as well as some part time help from one EDL Engineer, Model Maker, N/C Programmer & Tester.

CONFIDENTIAL-SUBJECT TO PROTECTIVE ORDER
KINZER V. REMINGTON

- Send Vendor Parts Out For Manufacturability and Quotation Estimate **Jan.'89 - Jan.'91**

Early vendor consultation and input is required due to many parts for detachable magazine box, fire control, scope mounts and extractor being vendor supplied parts with long lead times and vendor development input requirements for the design. 'High spot' estimates will be pursued early to determine feasibility of producing at a competitive cost. We will also look at after market products already developed, such as quick klip for a detachable magazine box and numerous scope mount/ring manufactures. A decision will have to be made at this time for project direction to go with a total Remington design magazine box or after market adaptation.

- Build Initial Design Prototype Guns **Aug.'89 - Apr.'90**

At least three prototype guns will be built: one in cal. 30-06 to cover similar calibers of 280, 270, 25-06, one in 7MM Rem. Mag. for Mag. Cal. and one for esthetic evaluation in standard head size caliber. All common parts with M/700 will be procured from the the plant, current inventory. All newly designed parts will be fabricated by Remington where possible or be developed by outside vendors with Engineering/Development assistance from Remington. Personnel required will be: one Research Engineer, one CAD Designer, one CAD Detailer, one N/C Programmer part time and one Model Maker full time, one part time.

- Initiate Design Review Team Analysis **Mar.'90 - May'90**

Their purpose will be to review design at this point and look at design objectively. Input is necessary from Process Engineering, Chemical/Materials Engineering, Arms Service feedback, Legal, as well as other Designers. Each group will review design as to potential 'Roadblocks' and feasibility to produce an acceptable design.

- Test Phase I Prototypes **Apr.'90 - May'90**

The two test prototypes - one standard caliber and one magnum caliber will be preliminary tested as to fit, form and function. These test guns will show up any major or minor design shortcomings prior to building multiple test guns for evaluation of function, accuracy, endurance. Testing will consist of dry firing/cycle, live firing, function and accuracy. Extended testing of one or both guns may be desired at this time depending on preliminary functioning results.

CONFIDENTIAL-SUBJECT TO PROTECTIVE ORDER
KINZER V. REMINGTON

- Test Phase I Prototypes - Cont'd.

A Marketing/Sales Manager Meeting will be held to evaluate styling, aesthetics, features utilizing the third prototype gun built. Their decisions will affect time for redesign and rebuild of models for both testing and aesthetics. Personnel required are: one Research Engineer full time, part time allowances for one EDL Engineer, one Model Maker, one CAD Designer and one Tester.

- Redesign (Decision Point) May'90 - Aug.'90

Redesign begins as soon as problems arise in Phase I assembly or testing, and continues through Phase I Testing. Depending on the extent and nature of parts requiring redesign as a result of testing, Marketing, Legal or Design Review Team recommendations, will greatly affect straight forward progress or delays for redesign, reevaluation and retesting. Depending on how much and how many components need attention will constitute a need for additional personnel such as: one Research Engineer, one EDL Engineer, one CAD Designer, one CAD Detailer, one Model Maker full or part time. Styling, stock design, weight, balance, safety will need to be addressed at this phase. Also, high spot economics of the whole program will need to be completed at this time, and evaluated to determine project feasibility and path forward or redesign.

- Build Phase II Design Samples July'90 - Jan.'91

A total of 15 design sample guns will be built (3 of each caliber) for this Phase II. The majority of the design, legal, and styling questions will be resolved during this phase. As many vendor sample prototype parts as are available, will be used. Other non-vendor parts will be made by Production, Model Shop or N/C Shop. Ongoing vendor visits will be required to consult and fabricate test sample parts from vendor temporary tooling. Some in-house finishing of these vendor components will be necessary by the Model Shop or N/C. Personnel required to implement this Phase II are: two Model Makers and one Engineer will be required full time, one N/C Programmer part time.

- Test Phase II Design Samples Jan.'91 - Mar.'91

These design sample guns will be tested for function, endurance, strength, blow/up, crud and temperature extreme tests, safety performance, dry firing and field function. Two 30-06 and two 7MM Rem. Mag. guns will be subjected to an intentional abuse test. This may constitute some design changes or modification as deemed necessary from test results. Personnel required are: one Engineer and two testers will be required full time and one Model Maker and N/C Designer part time.

CONFIDENTIAL-SUBJECT TO PROTECTIVE ORDER
KINZER V. REMINGTON

- Redesign **Feb.'91 - May'91**

Redesign begins as soon as problems arise during Phase II Testing and continues throughout testing. The test results will determine redesign effort needed to correct any deficiencies of the design. All styling, Marketing, and Legal concerns will be finalized by this time. If a major redesign or management change in criteria is required a substantial amount of time and effort will be required to complete. Personnel required will be one EDL Engineer, one Research Engineer, one CAD Designer, one CAD Detailer will be required full time.

- Build Design Acceptance Guns **Mar.'91 - Mar.'92**

The purpose of the design acceptance test is for finalizing design component parts to be fully tested in several guns prior to design transmittal to the plant. A total of 30 guns will be built including all five calibers for a large enough sample to be statistically sound. The majority of parts will be vendor produced parts on permanent tooling and in-house parts produced as much as possible on production machinery that will be used in the process of full production schedules. Some component parts may need finishing operations by the R & D Model Shop or N/C Shop. Also, N/C will aid FMS Operations for programming and debugging. Other current production parts required as used, or if in need of modifications will be procured from the plant. Personnel required will be: one Engineer, one N/C Programmer and one Model Maker full time. Some plant personnel will be required part time.

- Test Design Acceptance Guns **Apr.'92 - June'92**

Design acceptance testing of 30 gun samples is the final test performed on the design prior to transmittal. No alterations or modifications are allowed during this testing phase to the test guns. The Test Lab has complete control of the testing and performs all testing it deems necessary to verify design for release to production. Control Gun Testing will be run concurrently with New Design Acceptance Test Guns to compare current design with new offering, also to include competitive products where appropriate. Testing will include endurance, field function, drop, dry fire, strength, intentional abuse, temperature extreme, solvent testing and accuracy. When the Test Lab has passed these guns on all tests, a written report certifying the gun is acceptable for transmittal is filed. Personnel required are: one Engineer and four Test Lab personnel full time.

CONFIDENTIAL-SUBJECT TO PROTECTIVE ORDER
KINZER V. REMINGTON

- Mini Redesign and Drawing Transmittal July'92

By this phase of development, the design is firm and no major setbacks should occur. Only minor changes or updates should take place. Changes will be limited to process updates, improving endurance, cost effectiveness, and improved functionality only on parts found to be problem areas from previous testing. Initial transmittal of Research Model drawings and specifications takes place at this time. Personnel required are: one Engineer and one CAD Draftsman full time.

- Project Approval (Decision Point) July'92 - Aug.'92

During this period, final management approval of the design is given and money is released to begin production tooling. All pertinent economics and production process estimates will be completed for this project approval report.

- Draft Manuals Aug.'92 - Oct.'92

This involves development of text and illustrations for the owners manuals and instruction booklets and field service manuals. This will be prepared in conjunction with a commerical printer. Personnel required are: one Engineer and one Draftsman part time with input required from Legal Department and Customer Service.

HARTMAN

CONFIDENTIAL-SUBJECT TO PROTECTIVE ORDER
KINZER V. REMINGTON

CONFIDENTIAL

NEW BOLT ACTION RIFLE DEVELOPMENT SCHEDULE

28-JAN-1988 04:47:22 PM

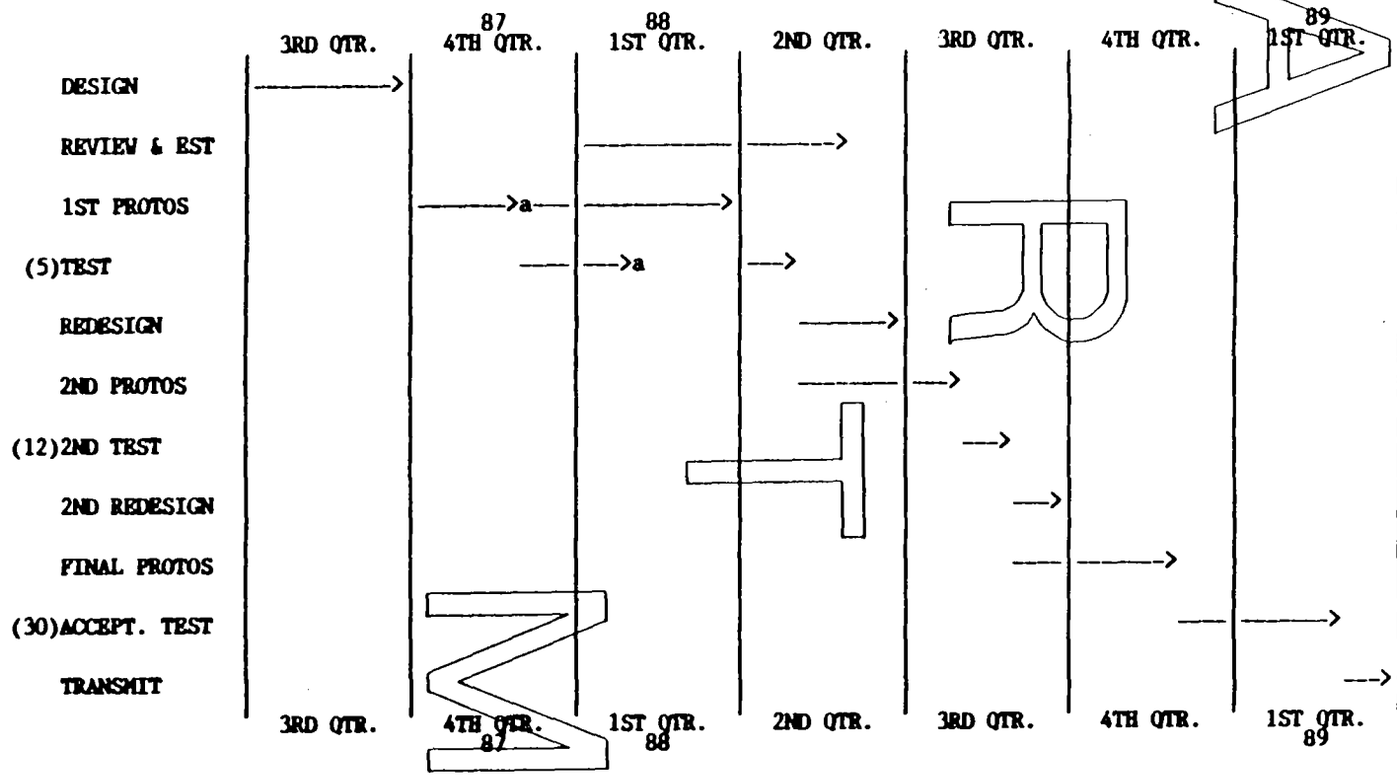

a)Schedule was revised due to priority conflicts with MAG 10.

RAJ

THIS SCHEDULE DOES NOT INCLUDE BRENNAN BARREL TECHNOLOGY

CONFIDENTIAL

R2539727

7-19-89

HARTMAN

EXEMPTS ONLY

PROGRAMS 89 ACTUAL 89 DES. 90 91 92

FINANCE
N CAR
N TRK
O/U

1ST QUART. 80 | 2ND | 3RD | 4TH QUARTER

DES.
ENG.
CAD.
EARL/DSESL.
CONSULTANT

LEN
TOM B
TOM POWERS
SKIP
MURPH
AMARTIN
D. FINDLAY

CONFIDENTIAL-SUBJECT TO PROTECTIVE ORDER
KINZER V. REMINGTON

R & D DEVELOPMENT COSTS
NEW BOLT ACTION RIFLE (N. BAR)

5-4-89

	RESEARCH ENG. 120M/YR	ENG. 142M/YR	CAD DESIGNER 120M/YR	CAD DETAILER 42M/YR	DRAFTSMAN 42M/YR	MODEL MAKER 42M/YR	NC PROGRAMMER 80M/YR	TESTER 42M/YR	COST $
INITIAL DESIGN 1.5 YRS	1.5	.25	.5	.5		.33	.25	.8	
	180M	36M	60M	21M		14M	20M	34M	365M
BUILD 3 GUNS .75 YRS	.25		.5	.5		1.12	.33		
	30M		60M	21M		47M	26M		184M
TEST 2 GUNS .25 YRS	.25	.12	.12			.12		.20	
	30M	17M	14M			5M		8M	74M
RE-DESIGN .33 YRS	.33	.33	.33	.33		.33			
	40M	47M	40M	14M		14M			155M
BUILD 15 GUNS. .58	.58					1.16	.5		
	70M					49M	40M		159M
TEST 15 GUNS, .25 YRS.	.25		.12			.12		.5	
	30M		14M			5M		21M	70M
RE-DESIGN .33 YRS.	.33	.33	.33	.33					
	40M	47M	40M	14M					141M
BUILD 30 GUNS 1 YR	1.0					1.0	1.0		
	120M					42M	80M		242M
TEST 30 GUNS .25 YR	.25							1.0	
	30M							42M	72M
RE-DESIGN & TRANSMIT .08 YR	.08			.08					
	10M			3M					13M
DRAFT MANUALS .25 YRS	.12				.25				
	14M				11M				25M
TOTAL	4.94	1.03	1.96	1.74	.25	4.18	2.08	2.5	1,500 M

1989 $

AMMO COSTS .25¢ RD BOTH REM + COMP, USED
CODE "F" - PER CLIFF LANE

CONFIDENTIAL-SUBJECT TO PROTECTIVE ORDER
KINZER V. REMINGTON

June 20, 1989

CONFIDENTIAL

RESEARCH DEVELOPMENT COSTS

FOR

NEW BOLT ACTION RIFLE (NBAR)

RESEARCH DEVELOPMENT COST ESTIMATE: Jan.'89 thru Oct.'91

1.	Initial Design	=	365 M
2.	Build Initial Design Prototype Guns(3)	=	184 M
	- Preliminary Prototype Tooling - temporary	=	80 M
3.	Design Review Team Analysis	=	35 M
4.	Test Phase I Prototypes	=	74 M
5.	Redesign After Phase I Test	=	155 M
6.	Build Phase II Design Samples (15)	=	159 M
	- Prototype Tooling	=	160 M
	- Plant Assistance	=	35 M
7.	Test Phase II Samples	=	70 M
8.	Redesign After Phase II Testing	=	141 M
9.	Build Design Acceptance Guns (30)	=	242 M
	- Prototype/Permanent Tooling	=	105 M
	- Plant Assistance	=	45 M
10.	Test Design Acceptance Guns	=	72 M
11.	Minor Redesign & Transmittal To Production	=	13 M
12.	Draft Manual	=	25 M
13.	Test Ammunition Cost 55,000 Rounds (5,000 Rds 1990 x .25) (50,000 Rds 1991 x .25)	=	14 M

TOTAL DEVELOPMENT COST (1989 DOLLARS) = 1,974 M

RESEARCH MANPOWER ESTIMATE: May'89 thru Oct.'91

1.	Research Engineer	=	4.94 man years
2.	EDL Engineer	=	1.03 man years
3.	CAD Designer	=	1.90 man years
4.	CAD Detailer	=	1.74 man years
5.	Draftsman	=	.25 man years
6.	Model Shop Personnel	=	4.18 man years
7.	N/C Programmer	=	2.08 man years
8.	Test Lab Personnel	=	2.50 man years

TGB:cap
6/20/89

CONFIDENTIAL-SUBJECT TO PROTECTIVE ORDER
KINZER V. REMINGTON

The purpose of the New Bolt Action Rifle (N'BAR) is to offer a replacement for the M/700 'BDL' Rifle currently being produced. The new design parameters will include:

- o Detachable Magazine Box
- o Improved Fire Control
  - No Connector
  - Two Trigger Pull Springs (Low Rate Spring)
  - Sealed Fire Control
  - Balanced Trigger
  - Trigger & Sear Block
  - Non-Retrofittable to M/700
- o Bolt Lock w/Override
- o New Scope Mounts - Possibly aftermarket bases and rings. To be offered with rifle package.
- o New Extractor System
- o New 'Custom Shop' Barrel Contour
  - Mountain Rifle Crown
- o Improved Bedding/Accuracy Features
  Example:
  - Thicker barrel bracket
  - Relieved thread - rec. fit & full hub bearing
- o M/700 Receiver to start with same round blank size and cosmetically altered behind front ring of steel over locking lugs.
- o New Wood Stock - Cosmetically altered for fittings/dress up/checkering

The "N'Bar" Design features will initially be produced in five calibers (30-06, 270, 280, 25-06 & 7MM Mag.) during the first year of introduction. These design/cost estimates are based strictly on introduction of these five calibers only in long action standard and mag. calibers only. If at a later point in time other calibers and short actions are added to this program, they will have additional development and introduction costs added.

- Initial Design **Jan.'89 - Dec.'89**

This includes preliminary experimental development work, sketches, scenarios, layouts, design, computer modeling, detailing and checking. This design will be a redesign of the existing M/700 Rifle currently in our line, only in those areas so stated above in the design parameters section. Short actions and additional calibers will be considered during initial design to allow them to be compatible for design inclusion at a later time. Personnel required to accomplish this will include: one Research Engineer full time, one Cad Designer and one CAD Detailer, and one Research Engineer 50% of time, as well as some part time help from one EDL Engineer, Model Maker, N/C Programmer & Tester.

- Send Vendor Parts Out For Manufacturability and Quotation Estimate **Jan.'89 - May'90**

Early vendor consultation and input is required due to many parts for detachable magazine box, fire control, scope mounts and extractor being vendor supplied parts with long lead times and vendor development input requirements for the design. 'High spot' estimates will be pursued early to determine feasibility of producing at a competitive cost. We will also look at after market products already developed, such as quick klip for a detachable magazine box and numerous scope mount/ring manufactures. A decision will have to be made at this time for project direction to go with a total Remington design magazine box or after market adaptation.

- Build Initial Design Prototype Guns **Sept.'89 - Jan.'90**

At least three prototype guns will be built: one in cal. 30-06 to cover similar calibers of 280, 270, 25-06, one in 7MM Rem. Mag. for Mag. Cal. and one for esthetic evaluation in standard head size caliber. All common parts with M/700 will be procured from the the plant, current inventory. All newly designed parts will be fabricated by Remington where possible or be developed by outside vendors with Engineering/Development assistance from Remington. Personnel required will be: one Research Engineer, one CAD Designer, one CAD Detailer, one N/C Programmer part time and two Model Makers full time, one part time.

- Initiate Design Review Team Analysis **Dec.'89 - Feb.'90**

Their purpose will be to review design at this point and look at design objectively. Input is necessary from Process Engineering, Chemical/Materials Engineering, Arms Service feedback, Legal, as well as other Designers. Each group will review design as to potential 'Roadblocks' and feasibility to produce an acceptable design.

- Test Phase I Prototypes **Jan.'90 - Feb.'90**

The two test prototypes - one standard caliber and one magnum caliber will be preliminary tested as to fit, form and function. These test guns will show up any major or minor design shortcomings prior to building multiple test guns for evaluation of function, accuracy, endurance. Testing will consist of dry firing/cycle, live firing, function and accuracy. Extended testing of one or both guns may be desired at this time depending on preliminary functioning results.

CONFIDENTIAL-SUBJECT TO PROTECTIVE ORDER
KINZER V. REMINGTON

- Test Phase I Prototypes - Cont'd.

A Marketing/Sales Manager Meeting will be held to evaluate styling, aesthetics, features utilizing the third prototype gun built. Their decisions will affect time for redesign and rebuild of models for both testing and aesthetics. Personnel required are: one Research Engineer full time, part time allowances for one EDL Engineer, one Model Maker, one CAD Designer and one Tester.

- Redesign (Decision Point) Feb.'90 - May'90

Redesign begins as soon as problems arise in Phase I assembly or testing, and continues through Phase I Testing. Depending on the extent and nature of parts requiring redesign as a result of testing, Marketing, Legal or Design Review Team recommendations, will greatly affect straight forward progress or delays for redesign, reevaluation and retesting. Depending on how much and how many components need attention will constitute a need for additional personnel such as: one Research Engineer, one EDL Engineer, one CAD Designer, one CAD Detailer, one Model Maker full or part time. Styling, stock design, weight, balance, safety will need to be addressed at this phase. Also, high spot economics of the whole program will need to be completed at this time, and evaluated to determine project feasibility and path forward or redesign.

- Build Phase II Design Samples May'90 - Aug.'90

A total of 15 design sample guns will be built (3 of each caliber) for this Phase II. The majority of the design, legal, and styling questions will be resolved during this phase. As many vendor sample prototype parts as are available, will be used. Other non-vendor parts will be made by Production, Model Shop or N/C Shop. Ongoing vendor visits will be required to consult and fabricate test sample parts from vendor temporary tooling. Some in-house finishing of these vendor components will be necessary by the Model Shop or N/C. Personnel required to implement this Phase II are: four Model Makers and two Engineers will be required full time, one N/C Programmer full time.

- Test Phase II Design Samples Aug.'90 - Oct.'90

These design sample guns will be tested for function, endurance, strength, blow/up, crud and temperature extreme tests, safety performance, dry firing and field function. Two 30-06 and two 7MM Rem. Mag. guns will be subjected to an intentional abuse test. This may constitute some design changes or modification as deemed necessary from test results. Personnel required are: one Engineer and two testers will be required full time and one Model Maker and N/C Designer part time.

CONFIDENTIAL-SUBJECT TO PROTECTIVE ORDER
KINZER V. REMINGTON

- Redesign **Sept.'90 - Dec.'90**

Redesign begins as soon as problems arise during Phase II Testing and continues throughout testing. The test results will determine redesign effort needed to correct any deficiencies of the design. All styling, Marketing, and Legal concerns will be finalized by this time. If a major redesign or management change in criteria is required a substantial amount of time and effort will be required to complete. Personnel required will be one EDL Engineer, one Research Engineer, one CAD Designer, one CAD Detailer will be required full time.

- Build Design Acceptance Guns **Nov.'90 - Apr.'91**

The purpose of the design acceptance test is for finalizing design component parts to be fully tested in several guns prior to design transmittal to the plant. A total of 30 guns will be built including all five calibers for a large enough sample to be statistically sound. The majority of parts will be vendor produced parts on permanent tooling and in-house parts produced as much as possible on production machinery that will be used in the process of full production schedules. Some component parts may need finishing operations by the R & D Model Shop or N/C Shop. Also, N/C will aid FMS Operations for programming and debugging. Other current production parts required as used, or if in need of modifications will be procured from the plant. Personnel required will be: two Engineers, two N/C Programmers and two Model Makers full time. Some plant personnel will be required part time.

- Test Design Acceptance Guns **May'91 - July'91**

Design acceptance testing of 30 gun samples is the final test performed on the design prior to transmittal. No alterations or modifications are allowed during this testing phase to the test guns. The Test Lab has complete control of the testing and performs all testing it deems necessary to verify design for release to production. Control Gun Testing will be run concurrently with New Design Acceptance Test Guns to compare current design with new offering, also to include competitive products where appropriate. Testing will include endurance, field function, drop, dry fire, strength, intentional abuse, temperature extreme, solvent testing and accuracy. When the Test Lab has passed these guns on all tests, a written report certifying the gun is acceptable for transmittal is filed. Personnel required are: one Engineer and four Test Lab personnel full time.

CONFIDENTIAL-SUBJECT TO PROTECTIVE ORDER
KINZER V. REMINGTON

- Mini Redesign and Drawing Transmittal July'91

By this phase of development, the design is firm and no major setbacks should occur. Only minor changes or updates should take place. Changes will be limited to process updates, improving endurance, cost effectiveness, and improved functionality only on parts found to be problem areas from previous testing. Initial transmittal of Research Model drawings and specifications takes place at this time. Personnel required are: one Engineer and one CAD Draftsman full time.

- Project Approval (Decision Point) July'91 - Aug.'91

During this period, final management approval of the design is given and money is released to begin production tooling. All pertinent economics and production process estimates will be completed for this project approval report.

- Draft Manuals Aug.'91 - Oct.'91

This involves development of text and illustrations for the owners manuals and instruction booklets and field service manuals. This will be prepared in conjunction with a commerical printer. Personnel required are: one Engineer and one Draftsman part time with input required from Legal Department and Customer Service.

HARTMAN

ROUGH DRAFT

JUNE 20 ~~May 5~~, 1989

CONFIDENTIAL

RESEARCH DEVELOPMENT COSTS

FOR

NEW BOLT ACTION RIFLE (NBAR)

RESEARCH DEVELOPMENT COST ESTIMATE: Jan. '89 thru Oct. ~~'92~~ 91

1.	Initial Design	=	365 M
2.	Build Initial Design Prototype Guns(3)	=	184 M
	- Preliminary Prototype Tooling - temporary	=	80 M
3.	Design Review Team Analysis	=	35 M
4.	Test Phase I Prototypes	=	74 M
5.	Redesign After Phase I Test	=	155 M
6.	Build Phase II Design Samples (15)	=	159 M
	- Prototype Tooling	=	160 M
	- Plant Assistance	=	35 M
7.	Test Phase II Samples	=	70 M
8.	Redesign After Phase II Testing	=	141 M
9.	Build Design Acceptance Guns (30)	=	242 M
	- Prototype/Permanent Tooling	=	105 M
	- Plant Assistance	=	45 M
10.	Test Design Acceptance Guns	=	72 M
11.	Minor Redesign & Transmittal To Production	=	13 M
12.	Draft Manual	=	25 M
13.	Test Ammunition Cost 55,000 Rounds (5,000 Rds 1990 x .25) (50,000 Rds 1991 x .25)	=	14 M
	TOTAL DEVELOPMENT COST (1989 DOLLARS)	=	1,974 M

RESEARCH MANPOWER ESTIMATE: May '89 thru Oct. ~~'92~~ 91

1.	Research Engineer	=	4.94 man years
2.	EDL Engineer	=	1.03 man years
3.	CAD Designer	=	1.90 man years
4.	CAD Detailer	=	1.74 man years
5.	Draftsman	=	.25 man years
6.	Model Shop Personnel	=	4.18 man years
7.	N/C Programmer	=	2.08 man years
8.	Test Lab Personnel	=	2.50 man years

TGB:cap
~~5/05/89~~
6/20/80

CONFIDENTIAL-SUBJECT TO PROTECTIVE ORDER
KINZER V. REMINGTON

The purpose of the New Bolt Action Rifle (N'BAR) is to offer a replacement for the M/700 'BDL' Rifle currently being produced. The new design parameters will include:

- o Detachable Magazine Box
- o Improved Fire Control
  - No Connector
  - Two Trigger Pull Springs (Low Rate Spring)
  - Sealed Fire Control
  - Balanced Trigger
  - Trigger & Sear Block
  - Non-Retrofittable to M/700
- o Bolt Lock w/Override
- o New Scope Mounts - Possibly aftermarket bases and rings. To be offered with rifle package.
- o New Extractor System
- o New 'Custom Shop' Barrel Contour
  - Mountain Rifle Crown
- o Improved Bedding/Accuracy Features
  Example:
  - Thicker barrel bracket
  - Relieved thread - rec. fit ~~a full~~ hub bearing
- o M/700 Receiver to start with same round blank size and cosmetically altered behind front ring of steel ~~a~~ locking lugs.
- o New Wood Stock - Cosmetically altered for fittings/dress up/checkering

The "N'Bar" Design features will initially be produced in five calibers (30-06, 270, 280, 25-06 & 7MM Mag.). during the first year of introduction. These design/cost estimates are based strictly on introduction of these five calibers only in long action standard and mag. calibers only. If at a later point in time other calibers and short actions are added to this program, they will have additional development and introduction costs added.

- Initial Design Jan.'89 - ~~June'90~~ DEC 89

This includes preliminary experimental development work, sketches, scenarios, layouts, design, computer modeling, detailing and checking. This design will be a redesign of the existing M/700 Rifle currently in our line, only in those areas so stated above in the design parameters section. Short actions and additional calibers will be considered during initial design to allow them to be compatible for design inclusion at a later time. Personnel required to accomplish this will include: one Research Engineer ~~[redacted]~~, full time, one Cad Designer & one CAD Detailer, & one Research Engineer 50% of time, as well as some part time help from one EDL Engineer, Model Maker, N/C Programmer & Tester.

CONFIDENTIAL-SUBJECT TO PROTECTIVE ORDER
KINZER V. REMINGTON

- **Send Vendor Parts Out For Manufacturability and Quotation Estimate** Jan.'89 - ~~Jan.'91~~ MAY 90

Early vendor consultation and input is required due to many parts for detachable magazine box, fire control, scope mounts and extractor being vendor supplied parts with long lead times and vendor development input requirements for the design. 'High spot' estimates will be pursued early to determine feasibility of producing at a competitive cost. We will also look at after market products already developed, such as quick klip for a detachable magazine box and numerous scope mount/ring manufactures. A decision will have to be made at this time for project direction to go with a total Remington design magazine box or after market adaptation.

- **Build Initial Design Prototype Guns** ~~Aug.~~ SEPT.'89 - ~~Apr.'90~~ JAN 90

At least three prototype guns will be built: one in cal. 30-06 to cover similar calibers of 280, 270, 25-06, one in 7MM Rem. Mag. for Mag. Cal. and one for esthetic evaluation in standard head size caliber. All common ~~parts with~~ M/700 will be procured from the the plant, current inventory. All newly designed parts will be fabricated by Remington where possible or be developed by outside vendors with Engineering/Development assistance from Remington. Personnel required will be: one Research Engineer, one CAD Designer, one CAD Detailer, one N/C Programmer part time and ~~one~~ Two Model Makers full time, one part time.

- **Initiate Design Review Team Analysis** ~~Mar.'90~~ DEC. 89 - ~~May'90~~ FEB 90

Their purpose will be to review design at this point and look at design objectively. Input is necessary from Process Engineering, Chemical/Materials Engineering, Arms Service feedback, Legal, as well as other Designers. Each group will review design as to potential 'Roadblocks' and feasibility to produce an acceptable design.

- **Test Phase I Prototypes** ~~Apr.~~ JAN.'90 - ~~May'90~~ FEB 90

The two test prototypes - one standard caliber and one magnum caliber will be preliminary tested as to fit, form and function. These test guns will show up any major or minor design shortcomings prior to building multiple test guns for evaluation of function, accuracy, endurance. Testing will consist of dry firing/cycle, live firing, function and accuracy. Extended testing of one or both guns may be desired at this time depending on preliminary functioning results.

CONFIDENTIAL-SUBJECT TO PROTECTIVE ORDER
KINZER V. REMINGTON

- Test Phase I Prototypes - Cont'd.

A Marketing/Sales Manager Meeting will be held to evaluate styling, aesthetics, features utilizing the third prototype gun built. Their decisions will affect time for redesign and rebuild of models for both testing and aesthetics. Personnel required are: one Research Engineer full time, part time allowances for one EDL Engineer, one Model Maker, one CAD Designer and one Tester.

- Redesign (Decision Point) ~~May~~ FEB '90 - ~~Aug.~~ MAY '90

Redesign begins as ~~soon as~~ problems arise in Phase I assembly or testing, and continues through Phase I Testing. Depending on the extent and nature of parts requiring redesign as a result of testing, Marketing, ~~Legal~~ or Design Review Team recommendations will greatly affect straight forward ~~problems~~ PROGRESS or delays for redesign, reevaluation and retesting. Depending on how much and how many components need attention will constitute a need for additional personnel such as: one Research Engineer, one EDL Engineer, one CAD Designer, one CAD Detailer, one Model Maker full or part time. Styling, ~~stock design~~, weight, balance, safety will need to be ~~addressed~~ ADD at this phase. Also, high spot economics of the whole program will need to be completed at this time, and evaluated to determine project feasibility and path forward or redesign.

COMMA HERE

- Build Phase II Design Samples ~~July~~ MAY '90 - ~~Jan. '91~~ AUG 90

A total of 15 design sample guns will be built (3 of each caliber) for this Phase II. The majority of the design, legal, and styling questions will be resolved during this phase. As many vendor sample prototype parts as are available, will be used. Other non-vendor parts will be made by Production, Model Shop or N/C Shop. Ongoing vendor visits will be required to consult and fabricate test sample parts from vendor temporary tooling. Some in-house finishing of these vendor components will be necessary by the Model Shop or N/C. Personnel required to implement this Phase II are: ~~two~~ FOUR Model Makers and ~~one~~ TWO Engineers will be required full time, one N/C Programmer ~~part~~ FULL time.

- Test Phase II Design Samples ~~Jan. '91~~ - ~~Mar. '91~~ AUG 90 - OCT. 90

These design sample guns will be tested for function, endurance, strength, blow/up, crud and temperature extreme tests, safety performance, dry firing AND field function, Two 30-06 and two 7MM Rem. Mag. guns will be subjected to an intentional abuse test. This may constitute some design changes or modification as deemed necessary from test results. Personnel required are: one Engineer and two testers will be required full time and one Model Maker and N/C Designer part time.

CONFIDENTIAL-SUBJECT TO PROTECTIVE ORDER
KINZER V. REMINGTON

- Redesign SEPT. 90 - DEC. 90 ~~Feb. '91 - May '91~~

Redesign begins as soon as problems arise during Phase II Testing and continues throughout testing. The test results will determine redesign effort needed to correct any deficiencies of the design. All styling, Marketing, and Legal concerns will be finalized by this time. If a major redesign or management change in criteria is required a substantial amount of time and effort will be required to complete. Personnel required will be one EDL Engineer, one Research Engineer, one CAD Designer, one CAD Detailer will be required full time.

- Build Design Acceptance Guns NOV. 90 - APR. 91 ~~Mar. '91 - Mar. '92~~

The purpose of the design acceptance test is for finalizing design component parts to be fully tested in several guns prior to design transmittal to the plant. A total of 30 guns will be built including all five calibers for a large enough sample to be statistically sound. The majority of parts will be vendor produced parts on permanent tooling and in-house parts produced as much as possible on production machinery that will be used in the process of full production schedules. Some component parts may need finishing operations by the R & D Model Shop or N/C Shop. Also, N/C will aid FMS Operations for programming and debugging. Other current production parts required as used, or if in need of modifications will be procured from the plant. Personnel required will be: ~~one~~ Two Engineers, ~~one~~ Two N/C Programmers and ~~one~~ Two Model Makers full time. Some plant personnel will be required part time.

- Test Design Acceptance Guns MAY 91 - JULY 91 ~~Apr. '92 - June '92~~

Design acceptance testing of 30 gun samples is the final test performed on the design prior to transmittal. No alterations or modifications are allowed during this testing phase to the test guns. The Test Lab has complete control of the testing and performs all testing it deems necessary to verify design for release to production. Control Gun Testing will be run concurrently with New Design Acceptance Test Guns to compare current design with new offering, also to include competitive products where appropriate. Testing will include endurance, field function, drop, dry fire, strength, intentional abuse, temperature ~~extreme~~, solvent testing and accuracy. When the Test Lab has passed these guns on all tests, a written report certifying the gun is acceptable for transmittal is filed. Personnel required are: one Engineer and four Test Lab personnel full time.

CONFIDENTIAL-SUBJECT TO PROTECTIVE ORDER
KINZER V. REMINGTON

- Mini Redesign and Drawing Transmittal **July'~~92~~ 91**

By this phase of development, the design is firm and no major setbacks should occur. Only minor changes or updates should take place. Changes will be limited to process updates, improving endurance, cost effectiveness, and improved functionality only on parts found to be problem areas from previous testing. Initial transmittal of Research Model drawings and specifications takes place at this time. Personnel required are: one Engineer and one CAD Draftsman full time.

- Project Approval (Decision Point) **July'~~92~~ 91 - Aug.'~~92~~ 91**

During this period, final management approval of the design is given and money is released to begin production tooling. All pertinent economics and production process estimates will be completed for this project approval report.

- Draft Manuals **Aug.'~~92~~ 91 - Oct.'~~92~~ 91**

This involves development of text and illustrations for the owners manuals and instruction booklets and field service manuals. This will be prepared in conjunction with a commerical printer. Personnel required are: one Engineer and one Draftsman part time with input required from Legal Department and Customer Service.

HARMAN

May 5, 1989

CONFIDENTIAL

RESEARCH DEVELOPMENT COSTS

FOR

NEW BOLT ACTION RIFLE (NBAR)

RESEARCH DEVELOPMENT COST ESTIMATE: Jan. '89 thru Oct. '92

1.	Initial Design	=	365 M
2.	Build Initial Design Prototype Guns(3)	=	184 M
	- Preliminary Prototype Tooling - temporary	=	80 M
3.	Design Review Team Analysis	=	35 M
4.	Test Phase I Prototypes	=	74 M
5.	Redesign After Phase I Test	=	155 M
6.	Build Phase II Design Samples (15)	=	159 M
	- Prototype Tooling	=	160 M
	- Plant Assistance	=	35 M
7.	Test Phase II Samples	=	70 M
8.	Redesign After Phase II Testing	=	141 M
9.	Build Design Acceptance Guns (30)	=	242 M
	- Prototype/Permanent Tooling	=	105 M
	- Plant Assistance	=	45 M
10.	Test Design Acceptance Guns	=	72 M
11.	Minor Redesign & Transmittal To Production	=	13 M
12.	Draft Manual	=	25 M
13.	Test Ammunition Cost 55,000 Rounds (,000 Rds 1990 x .25) (50,000 Rds 1991 x .25)	=	14 M
	TOTAL DEVELOPMENT COST (1989 DOLLARS)	=	1,974 M

RESEARCH MANPOWER ESTIMATE: May '89 thru Oct. '92

1.	Research Engineer	=	4.94 man years
2.	EDL Engineer	=	1.03 man years
3.	CAD Designer	=	1.90 man years
4.	CAD Detailer	=	1.74 man years
5.	Draftsman	=	.25 man years
6.	Model Shop Personnel	=	4.18 man years
7.	N/C Programmer	=	2.08 man years
8.	Test Lab Personnel	=	2.50 man years

TGB:cap
5/05/89

CONFIDENTIAL-SUBJECT TO PROTECTIVE ORDER
KINZER V. REMINGTON

The purpose of the New Bolt Action Rifle (N'BAR) is to offer a replacement for the M/700 'BDL' Rifle currently being produced. The new design parameters will include:

- o Detachable Magazine Box
- o Improved Fire Control
  - No Connector
  - Two Trigger Pull Springs (Low Rate Spring)
  - Sealed Fire Control
  - Balanced Trigger
  - Trigger & Sear Block
  - Non-Retrofittable to M/700
- o Bolt Lock w/Override
- o New Scope Mounts - Possibly aftermarket bases and rings. To be offered with rifle package.
- o New Extractor System
- o New 'Custom Shop' Barrel Contour
  - Mountain Rifle Crown
- o Improved Bedding/Accuracy Features
  Example:
  - Thicker barrel bracket
  - Relieved thread - rec. fit & full hub bearing
- o M/700 Receiver to start with same round blank size and cosmetically altered behind front ring of steel over locking lugs.
- o New Wood Stock - Cosmetically altered for fittings/dress up/checkering

The "N'Bar" Design features will initially be produced in five calibers (30-06, 270, 280, 25-06 & 7MM Mag.) during the first year of introduction. These design/cost estimates are based strictly on introduction of these five calibers only in long action standard and mag. calibers only. If at a later point in time other calibers and short actions are added to this program, they will have additional development and introduction costs added.

- Initial Design **Jan.'89 -June'90**

This includes preliminary experimental development work, sketches, scenarios, layouts, design, computer modeling, detailing and checking. This design will be a redesign of the existing M/700 Rifle currently in our line, only in those areas so stated above in the design parameters section. Short actions and additional calibers will be considered during initial design to allow them to be compatible for design inclusion at a later time. Personnel required to accomplish this will include: one Research Engineer full time, one Cad Designer and one CAD Detailer, 50% of time, as well as some part time help from one EDL Engineer, Model Maker, N/C Programmer & Tester.

CONFIDENTIAL-SUBJECT TO PROTECTIVE ORDER
KINZER V. REMINGTON

- Send Vendor Parts Out For Manufacturability and Quotation Estimate **Jan.'89 - Jan.'91**

Early vendor consultation and input is required due to many parts for detachable magazine box, fire control, scope mounts and extractor being vendor supplied parts with long lead times and vendor development input requirements for the design. 'High spot' estimates will be pursued early to determine feasibility of producing at a competitive cost. We will also look at after market products already developed, such as quick klip for a detachable magazine box and numerous scope mount/ring manufactures. A decision will have to be made at this time for project direction to go with a total Remington design magazine box or after market adaptation.

- Build Initial Design Prototype Guns **Aug.'89 - Apr.'90**

At least three prototype guns will be built: one in cal. 30-06 to cover similar calibers of 280, 270, 25-06, one in 7MM Rem. Mag. for Mag. Cal. and one for esthetic evaluation in standard head size caliber. All common parts with M/700 will be procured from the the plant, current inventory. All newly designed parts will be fabricated by Remington where possible or be developed by outside vendors with Engineering/Development assistance from Remington. Personnel required will be: one Research Engineer, one CAD Designer, one CAD Detailer, one N/C Programmer part time and one Model Maker full time, one part time.

- Initiate Design Review Team Analysis **Mar.'90 - May'90**

Their purpose will be to review design at this point and look at design objectively. Input is necessary from Process Engineering, Chemical/Materials Engineering, Arms Service feedback, Legal, as well as other Designers. Each group will review design as to potential 'Roadblocks' and feasibility to produce an acceptable design.

- Test Phase I Prototypes **Apr.'90 - May'90**

The two test prototypes - one standard caliber and one magnum caliber will be preliminary tested as to fit, form and function. These test guns will show up any major or minor design shortcomings prior to building multiple test guns for evaluation of function, accuracy, endurance. Testing will consist of dry firing/cycle, live firing, function and accuracy. Extended testing of one or both guns may be desired at this time depending on preliminary functioning results.

CONFIDENTIAL-SUBJECT TO PROTECTIVE ORDER
KINZER V. REMINGTON

- Test Phase I Prototypes - Cont'd.

A Marketing/Sales Manager Meeting will be held to evaluate styling, aesthetics, features utilizing the third prototype gun built. Their decisions will affect time for redesign and rebuild of models for both testing and aesthetics. Personnel required are: one Research Engineer full time, part time allowances for one EDL Engineer, one Model Maker, one CAD Designer and one Tester.

- Redesign (Decision Point) May'90 - Aug.'90

Redesign begins as soon as problems arise in Phase I assembly or testing, and continues through Phase I Testing. Depending on the extent and nature of parts requiring redesign as a result of testing, Marketing, Legal or Design Review Team recommendations, will greatly affect straight forward progress or delays for redesign, reevaluation and retesting. Depending on how much and how many components need attention will constitute a need for additional personnel such as: one Research Engineer, one EDL Engineer, one CAD Designer, one CAD Detailer, one Model Maker full or part time. Styling, stock design, weight, balance, safety will need to be addressed at this phase. Also, high spot economics of the whole program will need to be completed at this time, and evaluated to determine project feasibility and path forward or redesign.

- Build Phase II Design Samples July'90 - Jan.'91

A total of 15 design sample guns will be built (3 of each caliber) for this Phase II. The majority of the design, legal, and styling questions will be resolved during this phase. As many vendor sample prototype parts as are available, will be used. Other non-vendor parts will be made by Production, Model Shop or N/C Shop. Ongoing vendor visits will be required to consult and fabricate test sample parts from vendor temporary tooling. Some in-house finishing of these vendor components will be necessary by the Model Shop or N/C. Personnel required to implement this Phase II are: two Model Makers and one Engineer will be required full time, one N/C Programmer part time.

- Test Phase II Design Samples Jan.'91 - Mar.'91

These design sample guns will be tested for function, endurance, strength, blow/up, crud and temperature extreme tests, safety performance, dry firing and field function. Two 30-06 and two 7MM Rem. Mag. guns will be subjected to an intentional abuse test. This may constitute some design changes or modification as deemed necessary from test results. Personnel required are: one Engineer and two testers will be required full time and one Model Maker and N/C Designer part time.

CONFIDENTIAL-SUBJECT TO PROTECTIVE ORDER
KINZER V. REMINGTON

- Redesign **Feb.'91 - May'91**

Redesign begins as soon as problems arise during Phase II Testing and continues throughout testing. The test results will determine redesign effort needed to correct any deficiencies of the design. All styling, Marketing, and Legal concerns will be finalized by this time. If a major redesign or management change in criteria is required a substantial amount of time and effort will be required to complete. Personnel required will be one EDL Engineer, one Research Engineer, one CAD Designer, one CAD Detailer will be required full time.

- Build Design Acceptance Guns **Mar.'91 - Mar.'92**

The purpose of the design acceptance test is for finalizing design component parts to be fully tested in several guns prior to design transmittal to the plant. A total of 30 guns will be built including all five calibers for a large enough sample to be statistically sound. The majority of parts will be vendor produced parts on permanent tooling and in-house parts produced as much as possible on production machinery that will be used in the process of full production schedules. Some component parts may need finishing operations by the R & D Model Shop or N/C Shop. Also, N/C will aid FMS Operations for programming and debugging. Other current production parts required as used, or if in need of modifications will be procured from the plant. Personnel required will be: one Engineer, one N/C Programmer and one Model Maker full time. Some plant personnel will be required part time.

- Test Design Acceptance Guns **Apr.'92 - June'92**

Design acceptance testing of 30 gun samples is the final test performed on the design prior to transmittal. No alterations or modifications are allowed during this testing phase to the test guns. The Test Lab has complete control of the testing and performs all testing it deems necessary to verify design for release to production. Control Gun Testing will be run concurrently with New Design Acceptance Test Guns to compare current design with new offering, also to include competitive products where appropriate. Testing will include endurance, field function, drop, dry fire, strength, intentional abuse, temperature extreme, solvent testing and accuracy. When the Test Lab has passed these guns on all tests, a written report certifying the gun is acceptable for transmittal is filed. Personnel required are: one Engineer and four Test Lab personnel full time.

CONFIDENTIAL-SUBJECT TO PROTECTIVE ORDER
KINZER V. REMINGTON

- Mini Redesign and Drawing Transmittal July'92

By this phase of development, the design is firm and no major setbacks should occur. Only minor changes or updates should take place. Changes will be limited to process updates, improving endurance, cost effectiveness, and improved functionality only on parts found to be problem areas from previous testing. Initial transmittal of Research Model drawings and specifications takes place at this time. Personnel required are: one Engineer and one CAD Draftsman full time.

- Project Approval (Decision Point) July'92 - Aug.'92

During this period, final management approval of the design is given and money is released to begin production tooling. All pertinent economics and production process estimates will be completed for this project approval report.

- Draft Manuals Aug.'92 - Oct.'92

This involves development of text and illustrations for the owners manuals and instruction booklets and field service manuals. This will be prepared in conjunction with a commerical printer. Personnel required are: one Engineer and one Draftsman part time with input required from Legal Department and Customer Service.

HARMAN

ROUGH DRAFT

May 5, 1989

CONFIDENTIAL

RESEARCH DEVELOPMENT COSTS

FOR

NEW BOLT ACTION RIFLE (NBAR)

RESEARCH DEVELOPMENT COST ESTIMATE: Jan. '89 thru Oct. '92

1.	Initial Design	=	365 M
2.	Build Initial Design Prototype Guns(3)	=	184 M
	- Preliminary Prototype Tooling - temporary	=	80 M
3.	Design Review Team Analysis	=	35 M
4.	Test Phase I Prototypes	=	74 M
5.	Redesign After Phase I Test	=	155 M
6.	Build Phase II Design Samples (15)	=	159 M
	- Prototype Tooling	=	160 M
	- Plant Assistance	=	35 M
7.	Test Phase II Samples	=	70 M
8.	Redesign After Phase II Testing	=	141 M
9.	Build Design Acceptance Guns (30)	=	242 M
	- Prototype/Permanent Tooling	=	105 M
	- Plant Assistance	=	45 M
10.	Test Design Acceptance Guns	=	72 M
11.	Minor Redesign & Transmittal To Production	=	13 M
12.	Draft Manual	=	25 M
13.	Test Ammunition Cost 55,000 Rounds (5,000 Rds 1990 x .25) (50,000 Rds 1991 x .25)	=	14 M
	TOTAL DEVELOPMENT COST (1989 DOLLARS)	=	1,974 M

RESEARCH MANPOWER ESTIMATE: May '89 thru Oct. '92

1.	Research Engineer	=	4.94 man years
2.	EDL Engineer	=	1.03 man years
3.	CAD Designer	=	1.90 man years
4.	CAD Detailer	=	1.74 man years
5.	Draftsman	=	.25 man years
6.	Model Shop Personnel	=	4.18 man years
7.	N/C Programmer	=	2.08 man years
8.	Test Lab Personnel	=	2.50 man years

TGB:cap
5/05/89

CONFIDENTIAL-SUBJECT TO PROTECTIVE ORDER
KINZER V. REMINGTON

The purpose of the New Bolt Action Rifle (N'BAR) is to offer a replacement for the M/700 'BDL' Rifle currently being produced. The new design parameters will include:

- o Detachable Magazine Box
- o Improved Fire Control
  - No Connector
  - Two Trigger Pull Springs (Low Rate Spring)
  - Sealed Fire Control
  - Balanced Trigger
  - Trigger & Sear Block
  - Non-Retrofittable to M/700
- o Bolt Lock w/Override
- o New Scope Mounts - Possibly aftermarket bases and rings. To be offered with ~~rifle~~ package.
- o New Extractor System
- o New 'Custom Shop' Barrel Contour
  - Mountain ~~Rifle~~ Crown
- o Improved Bedding/Accuracy Features
  Example:
  - Thicker barrel bracket
  - Relieved thread - rec. fit & full hub bearing
- o M/700 Receiver to start with same round blank size and cosmetically altered behind ~~front~~ ring of steel over locking lugs.
- o New Wood Stock - Cosmetically altered for fittings/dress up/checkering

The "N'Bar" Design features will initially be produced in five calibers (30-06, 270, 280, 25-06 & 7MM Mag.). during the first year of introduction. These design/cost estimates are based strictly on introduction of these five calibers only in long action standard and mag. calibers only. If at a later point in time other calibers and short actions are added to this program, they will have additional development and introduction costs added.

- Initial Design **Jan.'89 -June'90**

This includes preliminary experimental development work, sketches, scenarios, layouts, design, computer modeling, detailing and checking. This design will be a redesign of the existing M/700 Rifle currently in our line, only in those areas so stated above in the design parameters section. Short actions and additional calibers will be considered during initial design to allow them to be compatible for design inclusion at a later time. Personnel required to accomplish this will include: one Research Engineer, full time, one CAD Designer & one CAD Detailer, 50% of time, as well as some part time help from one EDL Engineer, Model Maker, N/C Programmer & Tester.

- Send Vendor Parts Out For Manufacturability and Quotation Estimate **Jan.'89 - Jan.'91**

Early vendor consultation and input is required due to many parts for detachable magazine box, fire control, scope mounts and extractor being vendor supplied parts with long lead times and vendor development input requirements for the design. 'High spot' estimates will be pursued early to determine feasibility of producing at a competitive cost. We will also look at after market products already developed, such as quick klip for a detachable magazine box and numerous scope mount/ring manufactures. A decision will have to be made at this time for project direction to go with a total Remington design magazine box or after market adaptation.

- Build Initial Design Prototype Guns **Aug.'89 - Apr.'90**

At least three prototype guns will be built: one in cal. 30-06 to cover similar calibers of 280, 270, 25-06, one in 7MM Rem. Mag. for Mag. Cal. and one for esthetic evaluation in standard head size caliber. All common parts with M/700 will be procured from the the plant, current inventory. All newly designed parts will be fabricated by Remington where possible or be developed by outside vendors with Engineering/Development assistance from Remington. Personnel required will be: one Research Engineer, one CAD Designer, one CAD Detailer, one N/C Programmer part time and one Model Maker full time, one part time.

- Initiate Design Review Team Analysis **Mar.'90 - May'90**

Their purpose will be to review design at this point and look at design objectively. Input is necessary from Process Engineering, Chemical/Materials Engineering, Arms Service feedback, Legal, as well as other Designers. Each group will review design as to potential 'Roadblocks' and feasibility to produce an acceptable design.

- Test Phase I Prototypes **Apr.'90 - May'90**

The two test prototypes - one standard caliber and one magnum caliber will be preliminary tested as to fit, form and function. These test guns will show up any major or minor design shortcomings prior to building multiple test guns for evaluation of function, accuracy, endurance. Testing will consist of dry firing/cycle, live firing, function and accuracy. Extended testing of one or both guns may be desired at this time depending on preliminary functioning results.

CONFIDENTIAL-SUBJECT TO PROTECTIVE ORDER
KINZER V. REMINGTON

- Test Phase I Prototypes - Cont'd.

A Marketing/Sales Manager Meeting will be held to evaluate styling, aesthetics, features utilizing the third prototype gun built. Their decisions will affect time for redesign and rebuild of models for both testing and aesthetics. Personnel required are: one Research Engineer full time, part time allowances for one EDL Engineer, one Model Maker, one CAD Designer and one Tester.

- Redesign (Decision Point) May'90 - Aug.'90

Redesign begins as soon as problems arise in Phase I assembly or testing, and continues through Phase I Testing. Depending on the extent and nature of parts requiring redesign as a result of testing, Marketing, Legal or Design Review Team recommendations will greatly affect straight forward ~~programs~~ progress or delays for redesign, reevaluation and retesting. Depending on how much and how many components need attention will constitute a need for additional personnel such as: one Research Engineer, one EDL Engineer, one CAD Designer, one CAD Detailer, one Model Maker full or part time. Styling, stock design, weight, balance, safety will need to be ~~addressed~~ addressed at this phase. Also, high spot economics of the whole program will need to be completed at this time, and evaluated to determine project feasibility and path forward or redesign.

- Build Phase II Design Samples July'90 - Jan.'91

A total of 15 design sample guns will be built (3 of each caliber) for this Phase II. The majority of the design, legal, and styling questions will be resolved during this phase. As many vendor sample prototype parts as are available, will be used. Other non-vendor parts will be made by Production, Model Shop or N/C Shop. Ongoing vendor visits will be required to consult and fabricate test sample parts from vendor temporary tooling. Some in-house finishing of these vendor components will be necessary by the Model Shop or N/C. Personnel required to implement this Phase II are: two Model Makers and one Engineer will be required full time, one N/C Programmer part time.

- Test Phase II Design Samples Jan.'91 - Mar.'91

These design sample guns will be tested for function, endurance, strength, blow/up, crud and temperature extreme tests, safety performance, dry firing and field function. Two 30-06 and two 7MM Rem. Mag. guns will be subjected to an intentional abuse test. This may constitute some design changes or modification as deemed necessary from test results. Personnel required are: one Engineer and two testers will be required full time and one Model Maker and N/C Designer part time.

- Redesign **Feb.'91 - May'91**

Redesign begins as soon as problems arise during Phase II Testing and continues throughout testing. The test results will determine redesign effort needed to correct any deficiencies of the design. All styling, Marketing, and Legal concerns will be finalized by this time. If a major redesign or management change in criteria is required a substantial amount of time and effort will be required to complete. Personnel required will be one EDL Engineer, one Research Engineer, one CAD Designer, one CAD Detailer will be required full time.

- Build Design Acceptance Guns **Mar.'91 - Mar.'92**

The purpose of the design acceptance test is for finalizing design component parts to be fully tested in several guns prior to design transmittal to the plant. A total of 30 guns will be built including all five calibers for a large enough sample to be statistically sound. The majority of parts will be vendor produced parts on permanent tooling and in-house parts produced as much as possible on production machinery that will be used in the process of full production schedules. Some component parts may need finishing operations by the R & D Model Shop or N/C Shop. Also, N/C will aid FMS Operations for programming and debugging. Other current production parts required as used, or if in need of modifications will be procured from the plant. Personnel required will be: one Engineer, one N/C Programmer and one Model Maker full time. Some plant personnel will be required part time.

- Test Design Acceptance Guns **Apr.'92 - June'92**

Design acceptance testing of 30 gun samples is the final test performed on the design prior to transmittal. No alterations or modifications are allowed during this testing phase to the test guns. The Test Lab has complete control of the testing and performs all testing it deems necessary to verify design for release to production. Control Gun Testing will be run concurrently with New Design Acceptance Test Guns to compare current design with new offering, also to include competitive products where appropriate. Testing will include endurance, field function, drop, dry fire, strength, intentional abuse, temperature ~~extreme~~, solvent testing and accuracy. When the Test Lab has passed these guns on all tests, a written report certifying the gun is acceptable for transmittal is filed. Personnel required are: one Engineer and four Test Lab personnel full time.

CONFIDENTIAL-SUBJECT TO PROTECTIVE ORDER
KINZER V. REMINGTON

- Mini Redesign and Drawing Transmittal July'92

By this phase of development, the design is firm and no major setbacks should occur. Only minor changes or updates should take place. Changes will be limited to process updates, improving endurance, cost effectiveness, and improved functionality only on parts found to be problem areas from previous testing. Initial transmittal of Research Model drawings and specifications takes place at this time. Personnel required are: one Engineer and one CAD Draftsman full time.

- Project Approval (Decision Point) July'92 - Aug.'92

During this period, final management approval of the design is given and money is released to begin production tooling. All pertinent economics and production process estimates will be completed for this project approval report.

- Draft Manuals Aug.'92 - Oct.'92

This involves development of text and illustrations for the owners manuals and instruction booklets and field service manuals. This will be prepared in conjunction with a commerical printer. Personnel required are: one Engineer and one Draftsman part time with input required from Legal Department and Customer Service.

HARTMAN

CONFIDENTIAL

5-5-89

RESEARCH DEVELOPMENT COSTS
FOR
NEW BOLT ACTION RIFLE (N'BAR)

RESEARCH DEVELOPMENT COST ESTIMATE : JAN 89 THRU OCT. 92

1. INITIAL DESIGN	365 M
2. BUILD INITIAL DESIGN PROTO TYPE GUNS (3)	184 M
- PRELIMINARY PROTOTYPE TOOLING - TEMPORARY	80 M
3. DESIGN REVIEW TEAM ANALYSIS	35 M
4. TEST PHASE I PROTOTYPES	74 M
5. RE-DESIGN AFTER PHASE - I TEST	155 M
6. BUILD PHASE II DESIGN SAMPLES (15)	159 M
- PROTO TYPE TOOLING.	160 M
- PLANT ASSISTANCE	35 M
7. TEST PHASE II SAMPLES	70 M
8. REDESIGN AFTER PHASE II TESTING	141 M
9. BUILD DESIGN ALLEPTANCE GUNS (30)	242 M
- PROTO TYPE / PERMANENT TOOLING.	105 M
- PLANT ASSISTANCE	45 M
10. TEST DESIGN ALLEPTANCE GUNS	72 M
11. MINOR RE-DESIGN & TRANSMITTAL TO PRODUCTION	13 M
12. DRAFT MANUAL	25 M
13. TEST AMMUNITION COST (55,000 RDS (5000 RDS 1990 X .25¢) (50,000 RDS 1991 X .25¢))	14 M
TOTAL DEVELOPMENT COST (1989 DOLLARS) =	1,974 M

RESEARCH MANPOWER ESTIMATE : MAY 89 THRU OCT. 92

1. RESEARCH ENGINEER	4.94 MAN YEARS
2. EDL ENGINEER	1.03 " "
3. CAD DESIGNER	1.90 " "
4. CAD DETAILER	1.74 " "
5. DRAFTSMAN	.25 " "
6. MODEL SHOP PERSONNEL	4.18 " "
7. N/C PROGRAMMER	2.08 " "
8. TEST LAB PERSONNEL	2.50 " "

TGB 5-5-89

R & D DEVELOPMENT COSTS 5-2-89

NEW BOLT ACTION RIFLE (N'BAR)

Start 2

THE PURPOSE OF THE NEW BOLT ACTION RIFLE (N'BAR) IS TO OFFER A REPLACEMENT FOR THE M/700 BDL RIFLE CURRENTLY BEING PRODUCED. THE NEW DESIGN PARAMETERS WILL INCLUDE:

- DETACHABLE MAGAZINE BOX
- IMPROVED FIRE CONTROL -
  - NO CONNECTOR
  - TWO TRIGGER PULL SPRINGS (LOW RATE SPRING)
  - SEALED FIRECONTROL
  - BALANCED TRIGGER
  - TRIGGER & SEAR BLOCK
  - NON RETROFITTABLE TO M/700
- BOLT LOCK W/OVERRIDE
- NEW SCOPE MOUNTS - POSSIBLY AFTERMARKET BASES & RINGS. TO BE OFFERED WITH RIFLE PACKAGE
- NEW EXTRACTOR SYSTEM
- NEW "CUSTOM SHOP" BARREL CONTOUR
  - MOUNTAIN RIFLE CROWN
- IMPROVED BEDDING / ACCURACY FEATURES
  EX: - THICKER BARREL BRACKET
  - RELIEVED THREAD - REL. FULL FIT & HUB BEARING.
- M/700 RECEIVER TO START WITH SAME BLANK SIZE & COSMETICALLY ALTERED BEHIND FRONT RING OF STEEL OVER LOCKING LUGS, ROUND
- NEW WOOD STOCK - COSMETICALLY ALTERED FOR FITTINGS / DRESS UP / CHECKERING.

CONFIDENTIAL-SUBJECT TO PROTECTIVE ORDER
KINZER V. REMINGTON

THE "N" BAR" DESIGN FEATURES WILL INITIALLY BE PRODUCED IN 5 CAL'S. (30-06, 270, 280, 25-06 & 7 MM MAG.) DURING THE FIRST YEAR OF INTRODUCTION, THESE DESIGN / COST ESTIMATES ARE BASED STRICTLY ON INTRODUCTION OF THESE 5 CAL'S ONLY & IN LONG ACTION STD & MAG. CAL'S ONLY. IF AT A LATER POINT IN TIME OTHER CAL'S & SHORT ACTIONS ARE ADDED TO THIS PROGRAM THEY WILL HAVE ADDITIONAL DEVELOPMENT & INTRODUCTION COSTS ADDED.

1. INITIAL DESIGN — JAN. 89 - JUNE 90

THIS INCLUDES PRELIMINARY EXPERIMENTAL DEVELOPMENT WORK, SKETCHES, SENGRAMS, LAYOUTS, DESIGN, COMPUTER MODELING, DETAILING, & CHECKING. THIS DESIGN WILL BE A RE-DESIGN OF THE EXISTING M/700 RIFLE CURRENTLY IN OUR LINE, ONLY IN THOSE AREAS SO STATED ABOVE IN THE DESIGN PARAMETERS SECTION. SHORT ACTIONS & ADDITIONAL CAL'S, WILL BE CONSIDERED DURING INITIAL DESIGN TO ALLOW THEM TO BE COMPATIBLE FOR DESIGN INCLUSION AT A LATER TIME. PERSONNEL REQUIRED TO ACCOMPLISH THIS WILL INCLUDE: ONE RESEARCH ENGINEER, FULL TIME ONE CAD DESIGNER, ONE CAD DETAILER, 50% OF TIME, AS WELL AS SOME PART TIME HELP FROM ONE EDL ENGINEER, MODEL MAKER, N/C PROGRAMMER & TESTER.

JAN. 89 - JAN 91

SEND VENDOR PARTS OUT FOR MANUFACTURABILITY & QUOTATION ESTIMATES.

EARLY VENDOR CONSULTATION & INPUT IS REQUIRED DUE TO MANY PARTS FOR DETACHABLE MAGAZINE BOX, FIRECONTROL,

CONFIDENTIAL-SUBJECT TO PROTECTIVE ORDER
KINZER V. REMINGTON

SCOPE MOUNTS & EXTRACTOR BEING VENDOR SUPPLIED PARTS WITH LONG LEAD TIMES & VENDOR DEVELOPMENT INPUT REQUIREMENTS FOR THE DESIGN. "HIGH SPOT" ESTIMATES WILL BE PERFORMED EARLY TO DETERMINE FEASABILITY OF PRODUCING AT A COMPETITIVE COST, WE WILL ALSO LOOK AT AFTER MARKET PRODUCTS ALREADY DEVELOPED, SUCH AS QUICK KLIP FOR A DETACHABLE MAGAZINE BOX & NUMEROUS SCOPE MOUNT/RING MANUFACTURERS. A ~~DETERMINATION~~ DECISION WILL HAVE TO BE MADE AT THIS TIME FOR PROJECT DIRECTION TO GO WITH A TOTAL REMINGTON DESIGN MAGAZINE BOX OR AFTERMARKET ADAPTATION.

(2) AUG 89 - APR 90

BUILD INITIAL DESIGN PROTO TYPE GUNS

AT LEAST 3 PROTOTYPE GUNS WILL BE BUILT, ONE IN CAL 30-06 TO COVER SIMILIAR CAL'S OF 280, 270, 25-06 ONE IN 7MM REM MAG. FOR MAG. CAL. AND ONE FOR ESTHETIC EVALUATION IN STD HEAD SIZE CAL. ALL COMMON PARTS WITH M/700 WILL BE PROCURED FROM THE PLANT, CURRENT INVENTORY. ALL NEWLY DESIGNED PARTS WILL BE FABRICATED BY REMINGTON WHERE POSSIBLE OR BE DEVELOPED BY OUTSIDE VENDORS WITH ENGINEERING/DEVELOPMENT ASSISTANCE FROM REMINGTON. PERSONNEL REQUIRED WILL BE: ONE RESEARCH ENGINEER, ONE CAD DESIGNER, ONE CAD DETAILER, ONE N/C PROGRAMMER PART TIME AND ONE MODEL MAKER FULL TIME, ONE PART TIME

CONFIDENTIAL-SUBJECT TO PROTECTIVE ORDER
KINZER V. REMINGTON

3) INITIATE DESIGN REVIEW TEAM ANALYSIS MAR 90 - MAY 90

THEIR PURPOSE WILL BE TO REVIEW DESIGN AT THIS POINT AND LOOK AT DESIGN OBJECTIVELY. INPUT IS NECESSARY FROM PROCESS ENG, CHEMICAL/MATERIALS ENGINEERING, ARMS SERVICE FEEDBACK, LEGAL, AS WELL AS OTHER DESIGNERS. EACH GROUP WILL REVIEW DESIGN AS TO POTENTIAL ROAD BLOCKS & FEASABILITY TO PRODUCE AN ACCEPTABLE DESIGN.

4) TEST PHASE I PROTOTYPES APR 90 - MAY 90

THE TWO TEST PROTOTYPES ONE STD. CAL. & ONE MAGNUM CAL. WILL BE PRELIMINARY TESTED AS TO FIT, FORM, & FUNCTION. THESE TEST GUNS WILL SHOW UP ANY MAJOR OR MINOR DESIGN SHORTCOMINGS PRIOR TO BUILDING MULTIPLE TEST GUNS FOR EVALUATION OF FUNCTION, ACCURACY, ENDURANCE. TESTING WILL CONSIST OF DRY FIRING/CYCLES, LIVE FIRING, FUNCTION & ACCURACY. EXTENDED TESTING OF ONE OR BOTH GUNS MAY BE DESIRED AT THIS TIME DEPENDING ON PRELIMINARY FUNCTIONING RESULTS.

A MARKETING/SALES MANAGER MEETING WILL BE HELD TO EVALUATE STYLING, AESTHETICS, FEATURES UTILIZING THE 3 RD PROTOTYPE GUN BUILT. THEIR DECISIONS WILL AFFECT TIME FOR RE-DESIGN & REBUILD OF MODELS FOR BOTH TESTING & AESTHETICS. PERSONNEL REQUIRED ARE: ONE RESEARCH ENGINEER FULL TIME, PART TIME ALLOWANCES FOR ONE EDL ENG, ONE MODEL MAKER, ONE CAD DESIGNER & ONE TESTER

CONFIDENTIAL-SUBJECT TO PROTECTIVE ORDER
KINZER V. REMINGTON

H

(5)

(5) RE-DESIGN (DECISION POINT) MAY 90 - AUG 90

RE-DESIGN BEGINS AS SOON AS PROBLEMS ARISE IN PHASE I ASSEMBLY OR TESTING, & CONTINUES THRU PHASE I TESTING. DEPENDING ON THE EXTENT & NATURE OF PARTS REQUIRING REDESIGN AS A RESULT OF TESTING, MARKETING, LEGAL OR DESIGN REVIEW TEAM RECOMMENDATIONS WILL GREATLY AFFECT STRAIGHT FORWARD PROGRESS OR DELAYS FOR RE-DESIGN, RE-EVALUATION & RETESTING. DEPENDING ON HOW MUCH & HOW MANY COMPONENTS NEED ATTENTION WILL CONSTITUTE A NEED FOR ADDITIONAL PERSONNEL SUCH AS: ONE RESEARCH ENGINEER, ONE EDL ENGINEER, ONE CAD DESIGNER, ONE CAD DETAILER, ONE MODEL MAKER FULL OR PART TIME. STYLING, STOCK DESIGN, WEIGHT, BALANCE, SAFETY WILL NEED TO BE ADDRESSED AT THIS PHASE. ALSO HIGH SPOT ECONOMICS OF THE WHOLE PROGRAM WILL NEED TO BE COMPLETED AT THIS TIME, & EVALUATED TO DETERMINE PROJECT FEASIBILITY, & PATH FORWARD OR RE-DESIGN.

(6) BUILD PHASE II DESIGN SAMPLES (15) JULY 90 - JAN. 91

A TOTAL OF 15 DESIGN SAMPLE GUNS WILL BE BUILT (3 OF EACH CAL) FOR THIS PHASE II. THE MAJORITY OF THE DESIGN, LEGAL, & STYLING QUESTIONS WILL BE RESOLVED DURING THIS PHASE. AS MANY VENDOR SAMPLE PROTOTYPE PARTS AS ARE AVAILABLE, WILL BE USED. OTHER NON VENDOR PARTS WILL BE MADE BY PRODUCTION MODEL SHOP OR N/C SHOP. ONGOING VENDOR VISITS WILL BE REQUIRED TO CONSULT & FABRICATE

CONFIDENTIAL-SUBJECT TO PROTECTIVE ORDER
KINZER V. REMINGTON

TEST SAMPLE PARTS FROM VENDOR TEMPORARY TOOLING, SOME IN HOUSE FINISHING OF THESE VENDOR COMPONENTS WILL BE NECESSARY BY THE MODEL SHOP OR N/C. PERSONNEL REQUIRED TO IMPLEMENT THIS PHASE II ARE: TWO MODEL MAKERS & ONE ENGINEER WILL BE REQUIRED FULL TIME. ONE N/C PROGRAMMER PART TIME.

NEW PARA

7

TEST PHASE II DESIGN SAMPLES JAN. 91 – MAR 91

THESE DESIGN SAMPLE GUNS WILL BE TESTED FOR FUNCTION, ENDURANCE, STRENGTH - BLOW/UP, CRUD & TEMPERATURE EXTREME TESTS, SAFETY PERFORMANCE, DRY FIRING, FIELD FUNCTION. TWO 30-06 & TWO 7MM REM MAG. GUNS WILL BE SUBJECTED TO AN INTERNATIONAL ABUSE TEST. THIS MAY CONSTITUTE SOME DESIGN CHANGES OR MODIFICATIONS AS DEEMED NECESSARY FROM TEST RESULTS. PERSONNEL REQ'D ARE: ONE ENGINEER & TWO TESTERS WILL BE REQUIRED FULL TIME & ONE MODEL MAKER & N/C DESIGNER PART TIME.

8

RE-DESIGN - FEB 91 – MAY 91

RE-DESIGN BEGINS AS SOON AS PROBLEMS ARISE DURING PHASE II TESTING & CONTINUES THROUGHT TESTING. THE TEST RESULTS WILL DETERMINE REDESIGN EFFORT NEEDED TO CORRECT ANY DEFICIENCIES OF THE DESIGN. ALL STYLING, MARKETING, & LEGAL CONCERNS WILL BE FINALIZED BY THIS TIME. IF A MAJOR RE-DESIGN OR MANAGEMENT CHANGE IN CRITERIA IS REQUIRED A SUBSTANTIAL AMOUNT OR TIME & EFFORT WILL BE REQUIRED TO COMPLETE. PERSONNEL REQ'D WILL BE ONE EDL ENGINEER, ONE RESEARCH ENGINEER, ONE CAD DESIGNER, ONE CAD DETAILER WILL BE REQUIRED FULL TIME.

CONFIDENTIAL-SUBJECT TO PROTECTIVE ORDER
KINZER V. REMINGTON

(9) - BUILD DESIGN ACCEPTANCE GUNS, - MAR 91 - MAR 92

THE PURPOSE OF THE DESIGN ACCEPTANCE TEST IS FOR FINALIZING DESIGN COMPONENT PARTS TO BE FULLY TESTED IN SEVERAL GUNS PRIOR TO DESIGN TRANSMITTAL TO THE PLANT. A TOTAL OF 30 GUN'S WILL BE BUILT INCLUDING ALL 5 CAL'S FOR A LARGE ENOUGH SAMPLE TO BE STATISTICALLY SOUND. THE MAJORITY OF PARTS WILL BE VENDOR PRODUCED PARTS ON PERMENANT TOOLING & IN HOUSE PARTS PRODUCED AS MUCH AS POSSIBLE ON PRODUCTION MACHINERY THAT WILL BE USED IN THE PROCESS OF FULL PRODUCTION SCHEDULES. SOME COMPONENT PARTS MAY NEED FINISHING OPERATIONS BY THE R&D MODEL SHOP, OR N/C SHOP. ALSO N/C WILL AID FMS OPERATIONS FOR PROGRAMMING & DEBUGGING. OTHER CURRENT PRODUCTION PARTS REQUIRED AS USED, OR IF IN NEED OF MODIFICATIONS WILL BE PROCURED FROM THE PLANT. PERSONNEL REQ'D WILL BE: ONE ENGINEER, ONE N/C PROGRAMMER & ONE MODEL MAKER FULLTIME. SOME PLANT PERSONNEL WILL BE REQUIRED PART TIME.

(10) TEST DESIGN ACCEPTANCE GUNS, APR. 92 - JUNE 92

DESIGN ACCEPTANCE TESTING OF 30 GUN SAMPLES IS THE FINAL TEST PERFORMED ON THE DESIGN PRIOR TO TRANSMITTAL. NO ALTERATIONS OR MODIFICATIONS ARE ALLOWED DURING THIS TESTING PHASE TO THE TEST GUNS. THE TEST LAB HAS COMPLETE CONTROL OF THE TESTING & PERFORMS ALL TESTING IT DEEMS NECESSARY TO VERIFIY DESIGN FOR RELEASE TO PRODUCTION.

CONFIDENTIAL-SUBJECT TO PROTECTIVE ORDER
KINZER V. REMINGTON

CONTROL GUN TESTING WILL BE RUN CONCURRENTLY WITH NEW DESIGN ACCEPTANCE TEST GUNS TO COMPARE CURRENT DESIGN WITH NEW OFFERING, ALSO TO INCLUDE COMPETITIVE PRODUCTS WHERE APPROPRIATE. TESTING WILL INCLUDE ENDURANCE, FIRE FUNCTION, DROP, DRY FIRE, STRENGTH, INTENTIONAL ABUSE, TEMPERATURE EXTREME, SOLVENT TESTING AND ACCURACY. WHEN THE TEST LAB HAS PASSED THESE GUNS ON ALL TESTS, A WRITTEN REPORT CERTIFYING THE GUN IS ACCEPTABLE FOR TRANSMITTAL IS FILED. PERSONNEL REQ'D ARE: ONE ENGINEER & FOUR TEST LAB PERSONNEL FULL TIME.

11

MINI REDESIGN & DRAWING TRANSMITTAL JULY 92

BY THIS PHASE OF DEVELOPMENT, THE DESIGN IS FIRM & NO MAJOR SETBACKS SHOULD OCCUR. ONLY MINOR CHANGES OR UPDATES SHOULD TAKE PLACE. CHANGES WILL BE LIMITED TO PROCESS UPDATES, IMPROVING ENDURANCE, COST EFFECTIVENESS, & IMPROVED FUNCTIONALITY, ONLY ON PARTS FOUND TO BE PROBLEM AREAS FROM PREVIOUS TESTING. INITIAL TRANSMITTAL OF RESEARCH MODEL DRAWINGS & SPECIFICATIONS TAKES PLACE AT THIS TIME. PERSONNEL REQUIRED ARE: ONE ENGINEER & ONE CAD DRAFTSMAN FULL TIME

PROJECT APPROVAL (DECISION POINT) JULY 92 - AUG 92

DURING THIS PERIOD FINAL MANAGEMENT APPROVAL OF THE DESIGN IS GIVEN & MONEY IS RELEASED TO BEGIN PRODUCTION TOOLING. ALL PERTINENT ECONOMICS AND PRODUCTION PROCESS ESTIMATES WILL BE

CONFIDENTIAL-SUBJECT TO PROTECTIVE ORDER
KINZER V. REMINGTON

COMPLETED FOR THIS PROJECT APPROVAL REPORT

12 DRAFT MANUALS AUG. 92 - OCT 92

THIS INVOLVES DEVELOPMENT OF TEXT & ILLUSTRATIONS FOR THE OWNERS MANUALS & INSTRUCTION BOOKLETS & FIELD SERVICE MANUALS. THIS WILL BE PREPARED IN CONJUNCTION WITH A COMMERCIAL PRINTER. PERSONNEL REQ'D ARE: ONE ENGINEER & ONE DRAFTSMAN PART TIME WITH INPUT REQ'D FROM LEGAL DEPARTMENT & CUSTOMER SERVICE.

CONFIDENTIAL-SUBJECT TO PROTECTIVE ORDER
KINZER V. REMINGTON

16-5-89

STAFF MEETING - PRIORITIZATION OF PROJECTS

BUSINESS MEETING - N'BAR 93 INTRODUCTION

- IMPORTS HAVE DROPPED OFF AUTOLOADERS DOWN 25%

OVER & UNDER IMPORTS ARE UP

? WHAT RESOURCES WE HAVE & NEED EXEMPT

NEED 12 ENG, NOW HAVE 7 ENGINEERS

DISCONTINUE WORK ON "NCS" PROJECT (NEW CONCEPT SHOTGUN)

15.62

- MAKE N'BAR & N'CAR MAGAZINE BOX - SAME BOX TO BE RETROFITTABLE FOR BOTH (MAG'S + STR CAR)

ENGINEERS PEOPLE

3 RIM FIRE - FINDLAY JR.
SMITH
PLUNKETT

3 N'CAR - ROGERS
FINDLAY SR.
SEPALA

2 N BAR - BAUMAN
ROWLANDS

2 O/U - MURPHY
KEITH S/RANGER - KOLAR

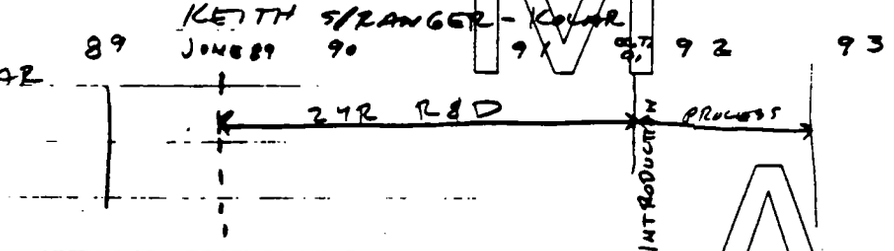

NEW SCHEDULE 84 FRIDAY

JAN 89 12
OCT 90
JAN 91 24
JAN 92 36
OCT 92 9
45

CONFIDENTIAL-SUBJECT TO PROTECTIVE ORDER
KINZER V. REMINGTON

FOR THE ABOVE FIRECONTROL DESIGN CRITERIA TO BE ADHERED TO, WILL ALSO AFFECT THE FOLLOWING AREAS OF THE NEW B.A.R.:

- RECEIVER - RE-DESIGN OR MODIFICATIONS DUE TO NON INTERCHANGEABILITY OF F. CONTROLS, & ENCLOSED "SEALED" F. CONTROL TO ELIMINATE CRUD ENTRY.
- BOLT, BOLT PLUG, FIRING PIN & HEAD (BOLT ASS'Y.) RE-DESIGN DUE TO BOLT LOCK BEING INDEPENDENT OF SAFETY LEVER

HARTMAN

2-21-89

DEVELOPMENT SCHEDULE (BY TUES 28 FEB)

- NEW BOLT ACTION RIFLE - FINALIZE DESIGN DATE

JUSTIFICATION SHEET - LIST OF FEATURES

DEVELOPMENT COSTS

TOOLING COSTS

PART COST

- INITIAL DESIGN - VENDOR QUOTES

PROTO TYPE STAGE - HOW MANY MODELS FOR TEST

COST EST.

DESIGN REVIEW

TESTING -

REDESIGN
NEW PROTOTYPES

RETEST

DESIGN ACCEPTANCE TEST

TRANSMITTAL TO PRODUCTION

CONFIDENTIAL-SUBJECT TO PROTECTIVE ORDER
KINZER V. REMINGTON

This is a list of the NBAR features, (that represent our design goals), in order of priority.

- o Detachable Magazine Box
- o Improved Firecontrol
  - No Connector
  - Two Trigger Pull Springs (low spring rate)
  - "Sealed Firecontrol"
  - Balanced Trigger
  - Trigger and Sear Block
  - Not Retrofittable to M/700
- o Bolt Lock w/override
- o Integral Scope Mounts
- o New Extractor
- o New "Custom Shop" Barrel Contour
  - -Mountain Rifle Crown
- o Improved Bedding System
- o M/700 receiver, cosmetically altered
- o New Wood Stock

3-14-89
RSM/TGB

CONFIDENTIAL-SUBJECT TO PROTECTIVE ORDER
KINZER V. REMINGTON

May 5, 1989

CONFIDENTIAL

RESEARCH DEVELOPMENT COSTS

FOR

NEW BOLT ACTION RIFLE (NBAR)

RESEARCH DEVELOPMENT COST ESTIMATE: Jan. '89 thru Oct. '92

1.	Initial Design	=	365 M
2.	Build Initial Design Prototype Guns(3)	=	184 M
	- Preliminary Prototype Tooling - temporary	=	80 M
3.	Design Review Team Analysis	=	35 M
4.	Test Phase I Prototypes	=	74 M
5.	Redesign After Phase I Test	=	155 M
6.	Build Phase II Design Samples (15)	=	159 M
	- Prototype Tooling	=	160 M
	- Plant Assistance	=	35 M
7.	Test Phase II Samples	=	70 M
8.	Redesign After Phase II Testing	=	141 M
9.	Build Design Acceptance Guns (30)	=	242 M
	- Prototype/Permanent Tooling	=	105 M
	- Plant Assistance	=	45 M
10.	Test Design Acceptance Guns	=	72 M
11.	Minor Redesign & Transmittal To Production	=	13 M
12.	Draft Manual	=	25 M
13.	Test Ammunition Cost 55,000 Rounds (5,000 Rds 1990 x .25) (50,000 Rds 1991 x .25)	=	14 M
	TOTAL DEVELOPMENT COST (1989 DOLLARS)	=	1,974 M

RESEARCH MANPOWER ESTIMATE: May '89 thru Oct. '92

1.	Research Engineer	=	4.94 man years
2.	EDL Engineer	=	1.03 man years
3.	CAD Designer	=	1.90 man years
4.	CAD Detailer	=	1.74 man years
5.	Draftsman	=	.25 man years
6.	Model Shop Personnel	=	4.18 man years
7.	N/C Programmer	=	2.08 man years
8.	Test Lab Personnel	=	2.50 man years

TGB:cap
5/05/89

CONFIDENTIAL-SUBJECT TO PROTECTIVE ORDER
KINZER V. REMINGTON

The purpose of the New Bolt Action Rifle (N'BAR) is to offer a replacement for the M/700 'BDL' Rifle currently being produced. The new design parameters will include:

- o Detachable Magazine Box
- o Improved Fire Control
  - No Connector
  - Two Trigger Pull Springs (Low Rate Spring)
  - Sealed Fire Control
  - Balanced Trigger
  - Trigger & Sear Block
  - Non-Retrofittable to M/700
- o Bolt Lock w/Override
- o New Scope Mounts - Possibly aftermarket bases and rings. To be offered with ~~rifle~~ package.
- o New Extractor System
- o New 'Custom Shop' Barrel Contour
  - Mountain Rifle Crown
- o Improved Bedding/Accuracy Features
  Example:
  - Thicker barrel bracket
  - Relieved thread - rec. fit & full hub bearing
- o M/700 Receiver to start with same round blank size and cosmetically altered behind front ring of steel a locking lugs.
- o New Wood Stock - Cosmetically altered for fittings/dress up/checkering

The "N'Bar" Design features will initially be produced in five calibers (30-06, 270, 280, 25-06 & 7MM Mag.). During the first year of introduction. These design/cost estimates are based strictly on introduction of these five calibers only in long action standard and mag. calibers only. If at a later point in time other calibers and short actions are added to this program, they will have additional development and introduction costs added.

- Initial Design **Jan.'89 -June'90**

This includes preliminary experimental development work, sketches, scenarios, layouts, design, computer modeling, detailing and checking. This design will be a redesign of the existing M/700 Rifle currently in our line, only in those areas so stated above in the design parameters section. Short actions and additional calibers will be considered during initial design to allow them to be compatible for design inclusion at a later time. Personnel required to accomplish this will include: one Research Engineer, ~~one~~ full time, one Cad Designer & one CAD Detailer, 50% of time, as well as some part time help from one EDL Engineer, Model Maker, N/C Programmer & Tester.

CONFIDENTIAL-SUBJECT TO PROTECTIVE ORDER
KINZER V. REMINGTON

- Send Vendor Parts Out For Manufacturability and Quotation Estimate — Jan.'89 - Jan.'91

Early vendor consultation and input is required due to many parts for detachable magazine box, fire control, scope mounts and extractor being vendor supplied parts with long lead times and vendor development input requirements for the design. 'High spot' estimates will be pursued early to determine feasibility of producing at a competitive cost. We will also look at after market products already developed, such as quick klip for a detachable magazine box and numerous scope mount/ring manufactures. A decision will have to be made at this time for project direction to go with a total Remington design magazine box or after market adaptation.

- Build Initial Design Prototype Guns — Aug.'89 - Apr.'90

At least three prototype guns will be built: one in cal. 30-06 to cover similar calibers of 280, 270, 25-06, one in 7MM Rem. Mag. for Mag. Cal. and one for esthetic evaluation in standard head size caliber. All common parts with M/700 will be procured from the the plant, current inventory. All newly designed parts will be fabricated by Remington where possible or be developed by outside vendors with Engineering/Development assistance from Remington. Personnel required will be: one Research Engineer, one CAD Designer, one CAD Detailer, one N/C Programmer part time and one Model Maker full time, one part time.

- Initiate Design Review Team Analysis — Mar.'90 - May'90

Their purpose will be to review design at this point and look at design objectively. Input is necessary from Process Engineering, Chemical/Materials Engineering, Arms Service feedback, Legal, as well as other Designers. Each group will review design as to potential 'Roadblocks' and feasibility to produce an acceptable design.

- Test Phase I Prototypes — Apr.'90 - May'90

The two test prototypes - one standard caliber and one magnum caliber will be preliminary tested as to fit, form and function. These test guns will show up any major or minor design shortcomings prior to building multiple test guns for evaluation of function, accuracy, endurance. Testing will consist of dry firing/cycle, live firing, function and accuracy. Extended testing of one or both guns may be desired at this time depending on preliminary functioning results.

CONFIDENTIAL-SUBJECT TO PROTECTIVE ORDER
KINZER V. REMINGTON

- Test Phase I Prototypes - Cont'd.

A Marketing/Sales Manager Meeting will be held to evaluate styling, aesthetics, features utilizing the third prototype gun built. Their decisions will affect time for redesign and rebuild of models for both testing and aesthetics. Personnel required are: one Research Engineer full time, part time allowances for one EDL Engineer, one Model Maker, one CAD Designer and one Tester.

- Redesign (Decision Point) May'90 - Aug.'90

Redesign begins as soon as problems arise in Phase I assembly or testing, and continues through Phase I Testing. Depending on the extent and nature of parts requiring redesign as a result of testing, Marketing, Legal or Design Review Team recommendations will greatly affect straight forward programs or delays for redesign, reevaluation and retesting. Depending on how much and how many components need attention will constitute a need for additional personnel such as: one Research Engineer, one EDL Engineer, one CAD Designer, one CAD Detailer, one Model Maker full or part time. Styling, stock design, weight, balance, safety will need to be oppressed at this phase. Also, high spot economics of the whole program will need to be completed at this time, and evaluated to determine project feasibility and path forward or redesign.

- Build Phase II Design Samples July'90 - Jan.'91

A total of 15 design sample guns will be built (3 of each caliber) for this Phase II. The majority of the design, legal, and styling questions will be resolved during this phase. As many vendor sample prototype parts as are available, will be used. Other non-vendor parts will be made by Production, Model Shop or N/C Shop. Ongoing vendor visits will be required to consult and fabricate test sample parts from vendor temporary tooling. Some in-house finishing of these vendor components will be necessary by the Model Shop or N/C. Personnel required to implement this Phase II are: two Model Makers and one Engineer will be required full time, one N/C Programmer part time.

- Test Phase II Design Samples Jan.'91 - Mar.'91

These design sample guns will be tested for function, endurance, strength, blow/up, crud and temperature extreme tests, safety performance, dry firing, field function, two 30-06 and two 7MM Rem. Mag. guns will be subjected to an intentional abuse test. This may constitute some design changes or modification as deemed necessary from test results. Personnel required are: one Engineer and two testers will be required full time and one Model Maker and N/C Designer part time.

CONFIDENTIAL-SUBJECT TO PROTECTIVE ORDER
KINZER V. REMINGTON

- Redesign **Feb.'91 - May'91**

Redesign begins as soon as problems arise during Phase II Testing and continues throughout testing. The test results will determine redesign effort needed to correct any deficiencies of the design. All styling, Marketing, and Legal concerns will be finalized by this time. If a major redesign or management change in criteria is required a substantial amount of time and effort will be required to complete. Personnel required will be one EDL Engineer, one Research Engineer, one CAD Designer, one CAD Detailer will be required full time.

- Build Design Acceptance Guns **Mar.'91 - Mar.'92**

The purpose of the design acceptance test is for finalizing design component parts to be fully tested in several guns prior to design transmittal to the plant. A total of 30 guns will be built including all five calibers for a large enough sample to be statistically sound. The majority of parts will be vendor produced parts on permanent tooling and in-house parts produced as much as possible on production machinery that will be used in the process of full production schedules. Some component parts may need finishing operations by the R & D Model Shop or N/C Shop. Also, N/C will aid FMS Operations for programming and debugging. Other current production parts required as used, or if in need of modifications will be procured from the plant. Personnel required will be: one Engineer, one N/C Programmer and one Model Maker full time. Some plant personnel will be required part time.

- Test Design Acceptance Guns **Apr.'92 - June'92**

Design acceptance testing of 30 gun samples is the final test performed on the design prior to transmittal. No alterations or modifications are allowed during this testing phase to the test guns. The Test Lab has complete control of the testing and performs all testing it deems necessary to verify design for release to production. Control Gun Testing will be run concurrently with New Design Acceptance Test Guns to compare current design with new offering, also to include competitive products where appropriate. Testing will include endurance, field function, frop, dry fire, strength, intentional abuse, temperature extreme, solvent testing and accuracy. When the Test Lab has passed these guns on all tests, a written report certifying the gun is acceptable for transmittal is filed. Personnel required are: one Engineer and four Test Lab personnel full time.

CONFIDENTIAL-SUBJECT TO PROTECTIVE ORDER
KINZER V. REMINGTON

- Mini Redesign and Drawing Transmittal July'92

By this phase of development, the design is firm and no major setbacks should occur. Only minor changes or updates should take place. Changes will be limited to process updates, improving endurance, cost effectiveness, and improved functionality only on parts found to be problem areas from previous testing. Initial transmittal of Research Model drawings and specifications takes place at this time. Personnel required are: one Engineer and one CAD Draftsman full time.

- Project Approval (Decision Point) July'92 - Aug.'92

During this period, final management approval of the design is given and money is released to begin production tooling. All pertinent economics and production process estimates will be completed for this project approval report.

- Draft Manuals Aug.'92 - Oct.'92

This involves development of text and illustrations for the owners manuals and instruction booklets and field service manuals. This will be prepared in conjunction with a commerical printer. Personnel required are: one Engineer and one Draftsman part time with input required from Legal Department and Customer Service.

HARMAN

The purpose of the New Bolt Action Rifle (N'BAR) is to offer a replacement for the M/700 'BDL' Rifle currently being produced. The new design parameters will include: ALSO SWS USE

METAL MATL PRIME OBJECTIVE WITH M/700 IS NOT

- o Detachable Magazine Box GRETTRO FITTABLE - NO FLOOR PLATE COVER KIT FOR REPLACEMENT IN FIELD
- o ~~Improved~~ Fire Control
  - REDESIGNED - No Connector
  - Two Trigger Pull Springs (Low Rate Spring)
  - Sealed Fire Control
  - Balanced Trigger
  - Trigger & Sear Block
  - Non-Retrofittable to M/700
- o Bolt Lock w/Override (LOOK AT FRED'S BOLT LOCK DESIGN ALREADY ON N'BAR)
- o New Scope Mounts - Possibly aftermarket bases and rings. To be offered with ~~rifle~~ package. 2 PC RING SETS
- o New Extractor System LEAF SPRING TYPE
- o New 'Custom Shop' Barrel Contour ? SIGHT HOLE DEPTH
  - Mountain Rifle ~~Crown~~ NEED DIFF. SIGHTS - T. MCCORMACK
- o Improved Bedding/Accuracy Features
  Example:
  - Thicker barrel bracket LOOK AT "MIM"
  - Relieved thread - rec. fit & full hub bearing
- o M/700 Receiver to start with same round blank size and cosmetically altered behind front ring of steel over locking lugs. T. MCCORMACK EXTENDED TANG LOOKS BETTER -
- o New Wood Stock - Cosmetically altered for fittings/dress up/checkering
- o COCKING INDICATOR INDEPENDENT OF BOLT LOCK

The "N'Bar" Design features will initially be produced in five calibers (30-06, 270, 280, 25-06 & 7MM Mag.) during the first year of introduction. These design/cost estimates are based strictly on introduction of these five calibers only in long action standard and mag. calibers only. If at a later point in time other calibers and short actions are added to this program, they will have additional development and introduction costs added.

- o LOADED CHAMBER INDICATOR - LOOK AT GOING OFF OF EJECTOR OR EXTRACTOR
- o BOLT HANDLE SHAPE NEW - T. MCCORMAC
- o RECOIL PADS LOOK AT UNCLE MIKES
- o FULLY ENCLOSED BOLT PLUG
- o LIGHT WEIGHT FIRING PIN

* PROCESS - CONTACT TO SEE IF HAVE ANY PROBLEM AREAS IN PRODUCING M/700 AS CURRENTLY EXISTS

CONFIDENTIAL-SUBJECT TO PROTECTIVE ORDER
KINZER V. REMINGTON

The purpose of the New Bolt Action Rifle (N'BAR) is to offer a replacement for the M/700 'BDL' Rifle currently being produced. The new design parameters will include:

- o Detachable Magazine Box
- REDESIGNED ~~Improved~~ Fire Control
  - No Connector
  - Two ~~Trigger~~ Pull Springs (Low Rate Spring)
  - Sealed Fire Control
  - Balanced Trigger
  - Trigger & Sear Block
  - Non-Retrofittable to M/700
- o Bolt Lock w/Override
- o New Scope Mounts - ~~Possibly~~ aftermarket bases and rings. To be offered with rifle package.
- o New Extractor System.
- o New 'Custom Shop' Barrel Contour
  - Mountain Rifle Crown
- o Improved Bedding/Accuracy Features
  Example:
  - Thicker barrel bracket
  - Relieved thread - rec. ~~fit & full~~ hub bearing
- o M/700 Receiver to start with same round blank size and cosmetically altered behind front ring of steel over locking lugs.
- o New Wood Stock - Cosmetically altered for fittings/dress-up/checkering
- o COCKING INDICATOR o LOADED CHAMBER INDICATOR o NEW SIGHTS

The "N'Bar" Design features will initially be produced in five calibers (30-06, 270, 280, 25-06 & 7MM Mag.) during the first year of introduction. These design/cost estimates are based strictly on introduction of these five calibers only in long action standard and mag. calibers only. If at a later point in time other calibers and short actions are added to this program, they will have additional development and introduction costs added.

o ENGRAVED BOLT PLUG

1/3/80

CONFIDENTIAL-SUBJECT TO PROTECTIVE ORDER
KINZER V. REMINGTON

June 20, 1989

CONFIDENTIAL

RESEARCH DEVELOPMENT COSTS
FOR
NEW BOLT ACTION RIFLE (NBAR)

RESEARCH DEVELOPMENT COST ESTIMATE: Jan.'89 thru Oct.'91

1.	Initial Design	=	365 M
2.	Build Initial Design Prototype Guns(3)	=	184 M
	- Preliminary Prototype Tooling - temporary	=	80 M
3.	Design Review Team Analysis	=	35 M
4.	Test Phase I Prototypes	=	74 M
5.	Redesign After Phase I Test	=	155 M
6.	Build Phase II Design Samples (15)	=	159 M
	- Prototype Tooling	=	160 M
	- Plant Assistance	=	35 M
7.	Test Phase II Samples	=	70 M
8.	Redesign After Phase II Testing	=	141 M
9.	Build Design Acceptance Guns (30)	=	242 M
	- Prototype/Permanent Tooling	=	105 M
	- Plant Assistance	=	45 M
10.	Test Design Acceptance Guns	=	72 M
11.	Minor Redesign & Transmittal To Production	=	13 M
12.	Draft Manual	=	25 M
13.	Test Ammunition Cost 55,000 Rounds (5,000 Rds 1990 x .25) (50,000 Rds 1991 x .25)	=	14 M
	TOTAL DEVELOPMENT COST (1989 DOLLARS)	=	**1,974 M**

RESEARCH MANPOWER ESTIMATE: May'89 thru Oct.'91

1.	Research Engineer	=	4.94 man years
2.	EDL Engineer	=	1.03 man years
3.	CAD Designer	=	1.90 man years
4.	CAD Detailer	=	1.74 man years
5.	Draftsman	=	.25 man years
6.	Model Shop Personnel	=	4.18 man years
7.	N/C Programmer	=	2.08 man years
8.	Test Lab Personnel	=	2.50 man years

TGB:cap
6/20/89

CONFIDENTIAL-SUBJECT TO PROTECTIVE ORDER
KINZER V. REMINGTON

The purpose of the New Bolt Action Rifle (N'BAR) is to offer a replacement for the M/700 'BDL' Rifle currently being produced. The new design parameters will include:

- o Detachable Magazine Box
- o Improved Fire Control
  - No Connector
  - Two Trigger Pull Springs (Low Rate Spring)
  - Sealed Fire Control
  - Balanced Trigger
  - Trigger & Sear Block
  - Non-Retrofittable to M/700
- o Bolt Lock w/Override
- o New Scope Mounts - Possibly aftermarket bases and rings. To be offered with rifle package.
- o New Extractor System
- o New 'Custom Shop' Barrel Contour
  - Mountain Rifle Crown
- o Improved Bedding/Accuracy Features
  Example:
  - Thicker barrel bracket
  - Relieved thread - rec. fit & full hub bearing
- o M/700 Receiver to start with same round blank size and cosmetically altered behind front ring of steel over locking lugs.
- o New Wood Stock - Cosmetically altered for fittings/dress up/checkering

The "N'Bar" Design features will initially be produced in five calibers (30-06, 270, 280, 25-06 & 7MM Mag.) during the first year of introduction. These design/cost estimates are based strictly on introduction of these five calibers only in long action standard and mag. calibers only. If at a later point in time other calibers and short actions are added to this program, they will have additional development and introduction costs added.

- Initial Design **Jan.'89 - Dec.'89**

This includes preliminary experimental development work, sketches, scenarios, layouts, design, computer modeling, detailing and checking. This design will be a redesign of the existing M/700 Rifle currently in our line, only in those areas so stated above in the design parameters section. Short actions and additional calibers will be considered during initial design to allow them to be compatible for design inclusion at a later time. Personnel required to accomplish this will include: one Research Engineer full time, one Cad Designer and one CAD Detailer, and one Research Engineer 50% of time, as well as some part time help from one EDL Engineer, Model Maker, N/C Programmer & Tester.

CONFIDENTIAL-SUBJECT TO PROTECTIVE ORDER
KINZER V. REMINGTON

- Send Vendor Parts Out For Manufacturability and Quotation Estimate **Jan.'89 - May'90**

Early vendor consultation and input is required due to many parts for detachable magazine box, fire control, scope mounts and extractor being vendor supplied parts with long lead times and vendor development input requirements for the design. 'High spot' estimates will be pursued early to determine feasibility of producing at a competitive cost. We will also look at after market products already developed, such as quick klip for a detachable magazine box and numerous scope mount/ring manufactures. A decision will have to be made at this time for project direction to go with a total Remington design magazine box or after market adaptation.

- Build Initial Design Prototype Guns **Sept.'89 - Jan.'90**

At least three prototype guns will be built: one in cal. 30-06 to cover similar calibers of 280, 270, 25-06, one in 7MM Rem. Mag. for Mag. Cal. and one for esthetic evaluation in standard head size caliber. All common parts with M/700 will be procured from the the plant, current inventory. All newly designed parts will be fabricated by Remington where possible or be developed by outside vendors with Engineering/Development assistance from Remington. Personnel required will be: one Research Engineer, one CAD Designer, one CAD Detailer, one N/C Programmer part time and two Model Makers full time, one part time.

- Initiate Design Review Team Analysis **Dec.'89 - Feb.'90**

Their purpose will be to review design at this point and look at design objectively. Input is necessary from Process Engineering, Chemical/Materials Engineering, Arms Service feedback, Legal, as well as other Designers. Each group will review design as to potential 'Roadblocks' and feasibility to produce an acceptable design.

- Test Phase I Prototypes **Jan.'90 - Feb.'90**

The two test prototypes - one standard caliber and one magnum caliber will be preliminary tested as to fit, form and function. These test guns will show up any major or minor design shortcomings prior to building multiple test guns for evaluation of function, accuracy, endurance. Testing will consist of dry firing/cycle, live firing, function and accuracy. Extended testing of one or both guns may be desired at this time depending on preliminary functioning results.

CONFIDENTIAL-SUBJECT TO PROTECTIVE ORDER
KINZER V. REMINGTON

- Test Phase I Prototypes - Cont'd.

A Marketing/Sales Manager Meeting will be held to evaluate styling, aesthetics, features utilizing the third prototype gun built. Their decisions will affect time for redesign and rebuild of models for both testing and aesthetics. Personnel required are: one Research Engineer full time, part time allowances for one EDL Engineer, one Model Maker, one CAD Designer and one Tester.

- **Redesign (Decision Point)** **Feb.'90 - May'90**

Redesign begins as soon as problems arise in Phase I assembly or testing, and continues through Phase I Testing. Depending on the extent and nature of parts requiring redesign as a result of testing, Marketing, Legal or Design Review Team recommendations, will greatly affect straight forward progress or delays for redesign, reevaluation and retesting. Depending on how much and how many components need attention will constitute a need for additional personnel such as: one Research Engineer, one EDL Engineer, one CAD Designer, one CAD Detailer, one Model Maker full or part time. Styling, stock design, weight, balance, safety will need to be addressed at this phase. Also, high spot economics of the whole program will need to be completed at this time, and evaluated to determine project feasibility and path forward or redesign.

- **Build Phase II Design Samples** **May'90 - Aug.'90**

A total of 15 design sample guns will be built (3 of each caliber) for this Phase II. The majority of the design, legal, and styling questions will be resolved during this phase. As many vendor sample prototype parts as are available, will be used. Other non-vendor parts will be made by Production, Model Shop or N/C Shop. Ongoing vendor visits will be required to consult and fabricate test sample parts from vendor temporary tooling. Some in-house finishing of these vendor components will be necessary by the Model Shop or N/C. Personnel required to implement this Phase II are: four Model Makers and two Engineers will be required full time, one N/C Programmer full time.

- **Test Phase II Design Samples** **Aug.'90 - Oct.'90**

These design sample guns will be tested for function, endurance, strength, blow/up, crud and temperature extreme tests, safety performance, dry firing and field function. Two 30-06 and two 7MM Rem. Mag. guns will be subjected to an intentional abuse test. This may constitute some design changes or modification as deemed necessary from test results. Personnel required are: one Engineer and two testers will be required full time and one Model Maker and N/C Designer part time.

CONFIDENTIAL-SUBJECT TO PROTECTIVE ORDER
KINZER V. REMINGTON

- Redesign Sept.'90 - Dec.'90

Redesign begins as soon as problems arise during Phase II Testing and continues throughout testing. The test results will determine redesign effort needed to correct any deficiencies of the design. All styling, Marketing, and Legal concerns will be finalized by this time. If a major redesign or management change in criteria is required a substantial amount of time and effort will be required to complete. Personnel required will be one EDL Engineer, one Research Engineer, one CAD Designer, one CAD Detailer will be required full time.

- Build Design Acceptance Guns Nov.'90 - Apr.'91

The purpose of the design acceptance test is for finalizing design component parts to be fully tested in several guns prior to design transmittal to the plant. A total of 30 guns will be built including all five calibers for a large enough sample to be statistically sound. The majority of parts will be vendor produced parts on permanent tooling and in-house parts produced as much as possible on production machinery that will be used in the process of full production schedules. Some component parts may need finishing operations by the R & D Model Shop or N/C Shop. Also, N/C will aid FMS Operations for programming and debugging. Other current production parts required as used, or if in need of modifications will be procured from the plant. Personnel required will be: two Engineers, two N/C Programmers and two Model Makers full time. Some plant personnel will be required part time.

- Test Design Acceptance Guns May'91 - July'91

Design acceptance testing of 30 gun samples is the final test performed on the design prior to transmittal. No alterations or modifications are allowed during this testing phase to the test guns. The Test Lab has complete control of the testing and performs all testing it deems necessary to verify design for release to production. Control Gun Testing will be run concurrently with New Design Acceptance Test Guns to compare current design with new offering, also to include competitive products where appropriate. Testing will include endurance, field function, drop, dry fire, strength, intentional abuse, temperature extreme, solvent testing and accuracy. When the Test Lab has passed these guns on all tests, a written report certifying the gun is acceptable for transmittal is filed. Personnel required are: one Engineer and four Test Lab personnel full time.

CONFIDENTIAL-SUBJECT TO PROTECTIVE ORDER
KINZER V. REMINGTON

- Mini Redesign and Drawing Transmittal July'91

By this phase of development, the design is firm and no major setbacks should occur. Only minor changes or updates should take place. Changes will be limited to process updates, improving endurance, cost effectiveness, and improved functionality only on parts found to be problem areas from previous testing. Initial transmittal of Research Model drawings and specifications takes place at this time. Personnel required are: one Engineer and one CAD Draftsman full time.

- Project Approval (Decision Point) July'91 - Aug.'91

During this period, final management approval of the design is given and money is released to begin production tooling. All pertinent economics and production process estimates will be completed for this project approval report.

- Draft Manuals Aug.'91 - Oct.'91

This involves development of text and illustrations for the owners manuals and instruction booklets and field service manuals. This will be prepared in conjunction with a commerical printer. Personnel required are: one Engineer and one Draftsman part time with input required from Legal Department and Customer Service.

DRAFT

CONFIDENTIAL-SUBJECT TO PROTECTIVE ORDER
KINZER V. REMINGTON

C-93725

THIS DRAWING OR INFORMATION IS PROPRIETARY INFORMATION TO THE REMINGTON ARMS COMPANY, INC.

DO NOT SCALE THIS DRAWING. DIMS TO FINISHES UNLESS OTHERWISE NOTED.
TOLERANCES ON DECIMAL DIMENSIONS ARE:
1 PLACE .D - TOLERANCE ± .005
2 PLACE .DD - TOLERANCE ± .005
3 PLACE .DDD - TOLERANCE ± .005
& ON FRACTIONAL DIMENSIONS ± 1/64
& ON ANGULAR DIMENSIONS ± 30' 30'
FINISHES ARE DESIGNATED BY ROUT HEAD DIMENSIONS (R.A.H.) MEANS ROUT DIMENSIONS VALUES AND ARE THE MAXIMUM ROUGHNESS ACCEPTABLE UNLESS OTHERWISE SPECIFIED.
FINISH ROUGHNESS TO BE 125√ OR BETTER.

RECOMMENDED MATERIAL AND HEAT TREAT
MATERIAL INJECTALOY MOD-ZX 55 ROCKWELL
HEAT TREAT
MARKING
COLOR BLACK OXIDE
HEAT TREAT AND COLOR TO BE DONE BY REMINGTON

ALTERATIONS

NO.	NOTE	DATE	BY	CHECK

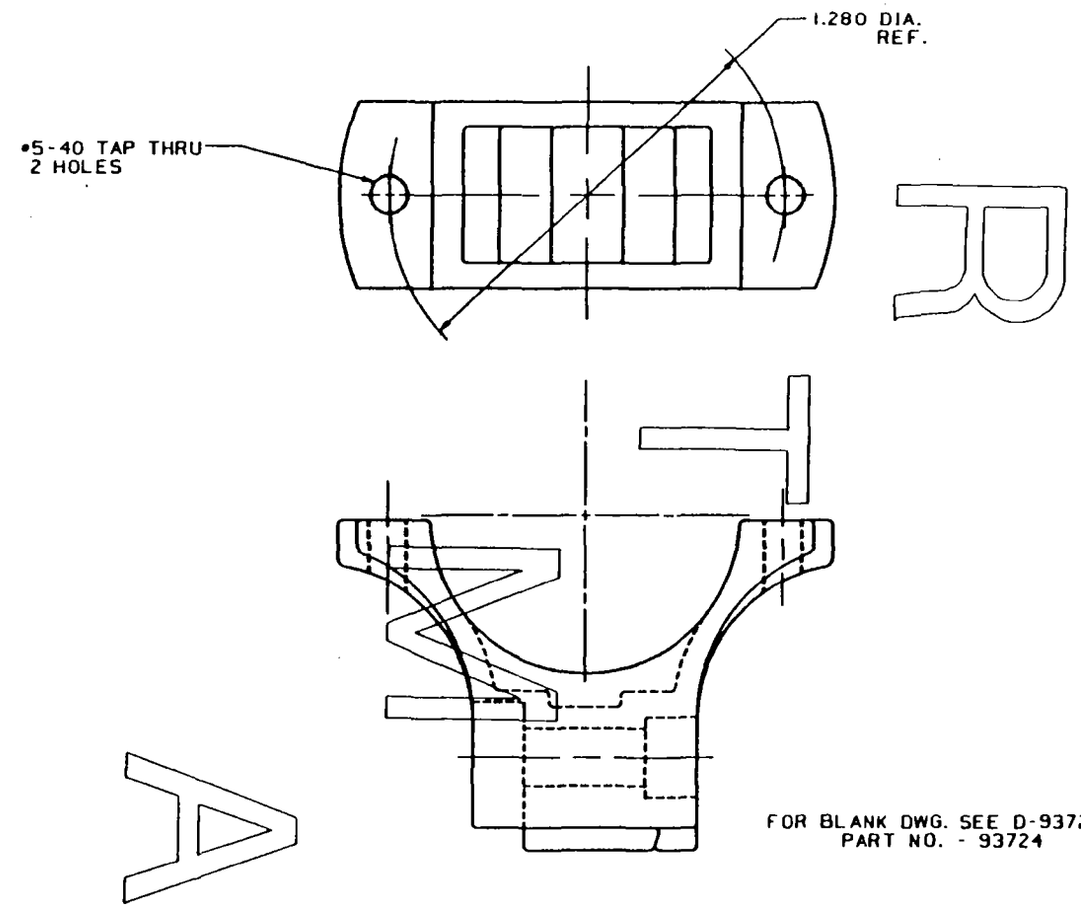

FOR BLANK DWG. SEE D-93724
PART NO. - 93724

NBAR	93725	SCOPE MOUNT
MODEL	PART NO.	PART USE

DRN. BY DATE	CHK. BY DATE	CHK. BY DATE	APR. BY DATE
F. MARTIN	W.P. 3-7-85	R.S.M. 4-2-85	

TITLE SCOPE MOUNT

NUMBER C-93725 — SCALE 4X — REMINGTON ARMS CO. INC. ILION RESEARCH DIV.

CV FILENAME NBAR SCOPE-MOUNT

CONFIDENTIAL-SUBJECT TO PROTECTIVE ORDER
KINZER V. REMINGTON

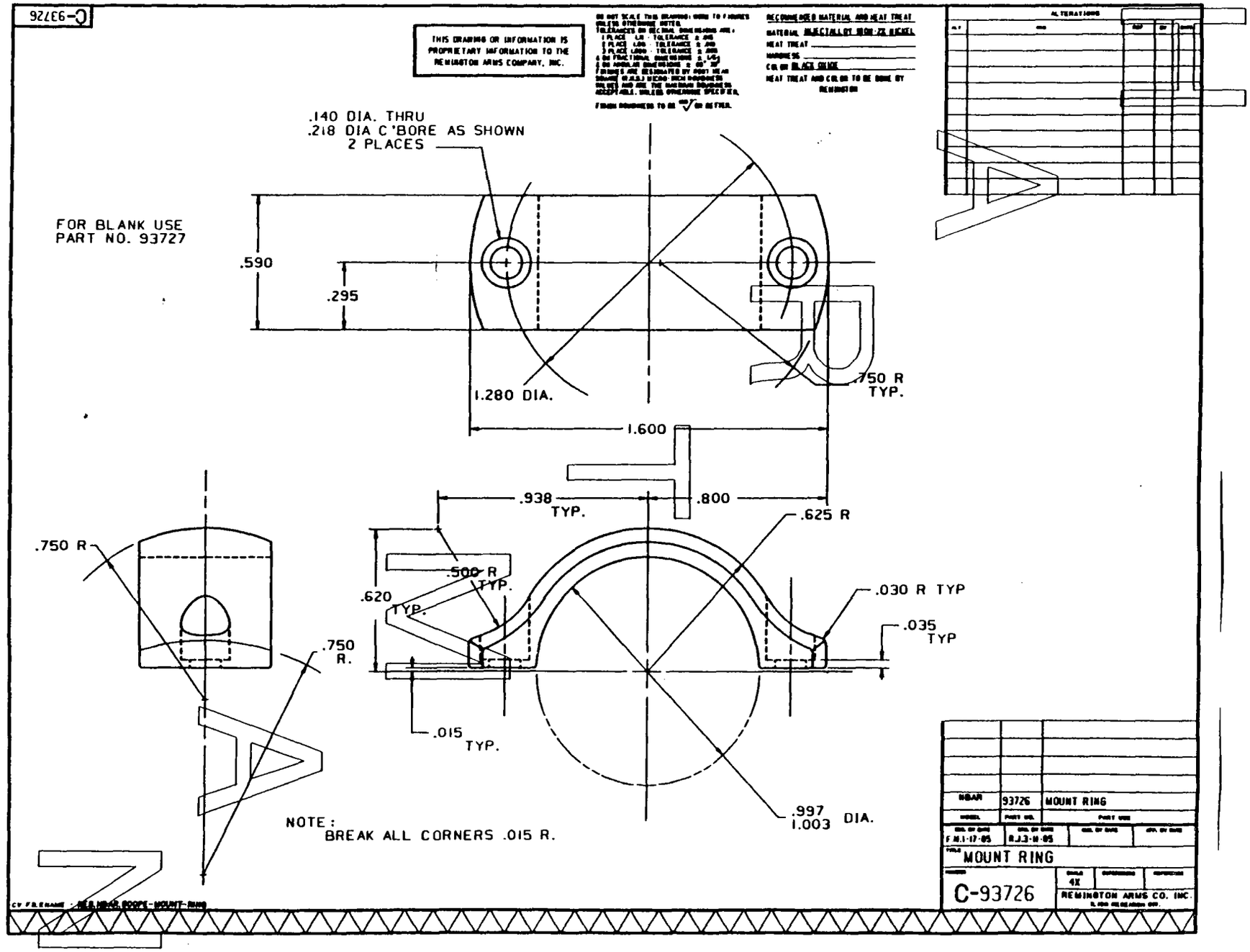

CONFIDENTIAL-SUBJECT TO PROTECTIVE ORDER
KINZER V. REMINGTON

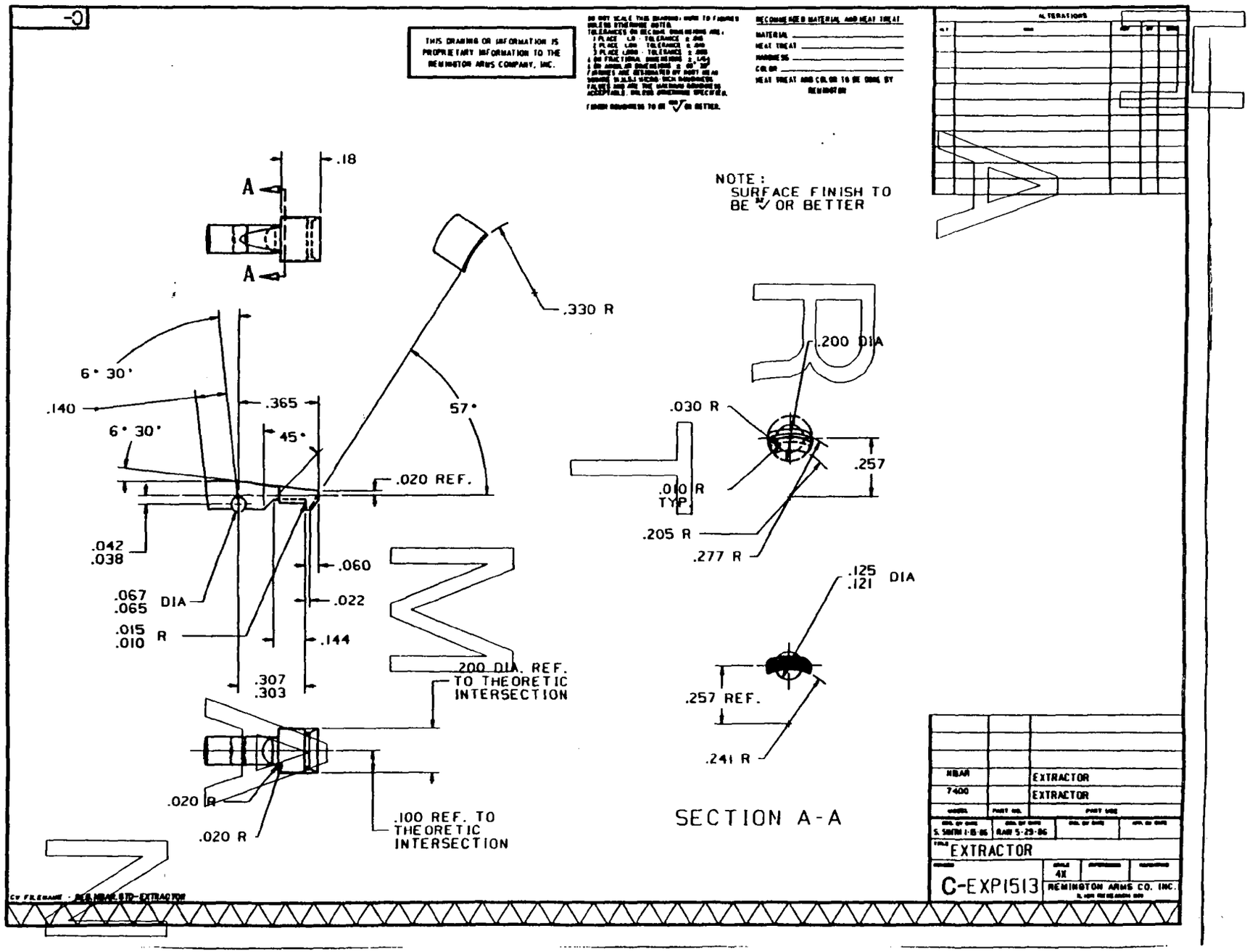

R2539784

== LIST == 12- 9-88 13:35:19 FUTIL 10.27

FILENAME	DATE	TIME
RES.NBAR.TRIGGER-GUARD.TJP.&PD	10-27-88	14:03:59
RES.NBAR.BBL-NEW-CONTOUR.RAW.&PD	8-22-88	13:18:20
RES.NBAR.BBL-NEW-CONTOUR-MAG.RAW.&PD	8-22-88	13:35:57
RES.NBAR.BOLT-ASSY.TJP.&PD	10- 1-87	10:30:11
RES.NBAR.BOLT-HEAD.&PD	6-11-86	17:52:09
RES.NBAR.BOLT-LOCK.RAW.&PD	3-28-88	21:32:45
RES.NBAR.FIRCTRL-PLATE-LFT.&PD	2-25-87	20:09:57
RES.NBAR.FIRCTRL-PLATE-RT.&PD	1- 5-88	18:56:10
RES.NBAR.FIRING-PIN-ASSY-LA.&PD	3-14-86	7:10:34
RES.NBAR.FRONT-SPACER.&PD	2-25-87	16:35:03
RES.NBAR.GUARD-SCREW.&PD	7-16-86	9:37:22
RES.NBAR.REAR-GUARD-SCREW.&PD	7-22-86	15:02:13
RES.NBAR.REAR-SPACER.&PD	11-29-87	9:44:54
RES.NBAR.FIRING-PINHEAD.&PD	1-29-88	8:03:43
RES.NBAR.RECEIVER.&PD	11-29-87	9:53:59
RES.NBAR.SAFETY-ASSY.&PD	2-26-87	20:29:52
RES.NBAR.SAFETY-PIVOT-PIN.&PD	12-21-87	16:47:41

RES.NBAR.TRIGGER-GUARD.TJP.&PD	10-27-88	14:03:59
RES.NBAR.BBL-NEW-CONTOUR.RAW.&PD	8-22-88	13:18:20
RES.NBAR.BBL-NEW-CONTOUR-MAG.RAW.&PD	8-22-88	13:35:57
RES.NBAR.BOLT-ASSY.TJP.&PD	10- 1-87	10:30:11
RES.NBAR.BOLT-HEAD.&PD	6-11-86	17:52:09
RES.NBAR.BOLT-LOCK.RAW.&PD	3-28-88	21:32:45
RES.NBAR.FIRCTRL-PLATE-LFT.&PD	2-25-87	20:09:57
RES.NBAR.FIRCTRL-PLATE-RT.&PD	1- 5-88	18:56:10
RES.NBAR.FIRING-PIN-ASSY-LA.&PD	3-14-86	7:10:34
RES.NBAR.FRONT-SPACER.&PD	2-25-87	16:35:03
RES.NBAR.GUARD-SCREW.&PD	7-16-86	9:37:22
RES.NBAR.REAR-GUARD-SCREW.&PD	7-22-86	15:02:13
RES.NBAR.REAR-SPACER.&PD	11-29-87	9:44:54
RES.NBAR.FIRING-PINHEAD.&PD	1-29-88	8:03:43
RES.NBAR.RECEIVER.&PD	11-29-87	9:53:59
RES.NBAR.SAFETY-ASSY.&PD	2-26-87	20:29:52
RES.NBAR.SAFETY-PIVOT-PIN.&PD	12-21-87	16:47:41
RES.NBAR.SEAR-SAFETY-CAM.&PD	1- 4-88	17:26:42
RES.NBAR.STOCK.&PD	3-10-87	16:10:49
RES.NBAR.STOCK-INSERT.&PD	10- 8-86	16:09:23
RES.NBAR.TRIGGER-ASSY.&PD	5- 6-88	22:04:45
RES.NBAR.TRIGGER-BLK-PLUNGER.&PD	2-25-87	16:08:33
RES.NBAR.TRIGGER-HOUSING-ASSY.&PD	11-29-87	10:10:09

1>

OLD HOUSI

OLD.&PD

CONFIDENTIAL-SUBJECT TO PROTECTIVE ORDER
KINZER V. REMINGTON

RES.NBAR.TRIGGER-GUARD.TJP.&PD	10-27-88	14:03:59
RES.NBAR.BBL-NEW-CONTOUR.RAW.&PD	8-22-88	13:18:20
RES.NBAR.BBL-NEW-CONTOUR-MAG.RAW.&PD	8-22-88	13:35:57
RES.NBAR.BOLT-ASSY.TJP.&PD	10- 1-87	10:30:11
RES.NBAR.BOLT-HEAD.&PD	6-11-86	17:52:09
RES.NBAR.BOLT-LOCK.RAW.&PD	3-28-88	21:32:45
RES.NBAR.FIRCTRL-PLATE-LFT.&PD	2-25-87	20:09:57
RES.NBAR.FIRCTRL-PLATE-RT.&PD	1- 5-88	18:56:10
RES.NBAR.FIRING-PIN-ASSY-LA.&PD	3-14-86	7:10:34
RES.NBAR.FRONT-SPACER.&PD	2-25-87	16:35:03
RES.NBAR.GUARD-SCREW.&PD	7-16-86	9:37:22
RES.NBAR.REAR-GUARD-SCREW.&PD	7-22-86	15:02:13
RES.NBAR.REAR-SPACER.&PD	11-29-87	9:44:54
RES.NBAR.FIRING-PINHEAD.&PD	1-29-88	8:03:43
RES.NBAR.RECEIVER.&PD	11-29-87	9:53:59
RES.NBAR.SAFETY-ASSY.&PD	2-26-87	20:29:52
RES.NBAR.SAFETY-PIVOT-PIN.&PD	12-21-87	16:47:41
RES.NBAR.SEAR-SAFETY-CAM.&PD	1- 4-88	17:26:42
RES.NBAR.STOCK.&PD	3-10-87	16:10:49
RES.NBAR.STOCK-INSERT.&PD	10- 8-86	16:09:23
RES.NBAR.TRIGGER-ASSY.&PD	5- 6-88	22:04:45
RES.NBAR.TRIGGER-BLK-PLUNGER.&PD	2-25-87	16:08:33
RES.NBAR.TRIGGER-HOUSING-ASSY.&PD	11-29-87	10:10:09

1 >

RES.700.E33225.35. RECEIVER-LA-RH.DSF.&PD

Becomes 700.&PD

Views 1, 2, 4, 21, 3, 5, 6, 32, 51, 52

PRELIMINARY

3. Drawings, Part Blueprints, Sketches

CONFIDENTIAL-SUBJECT TO PROTECTIVE ORDER
KINZER V. REMINGTON

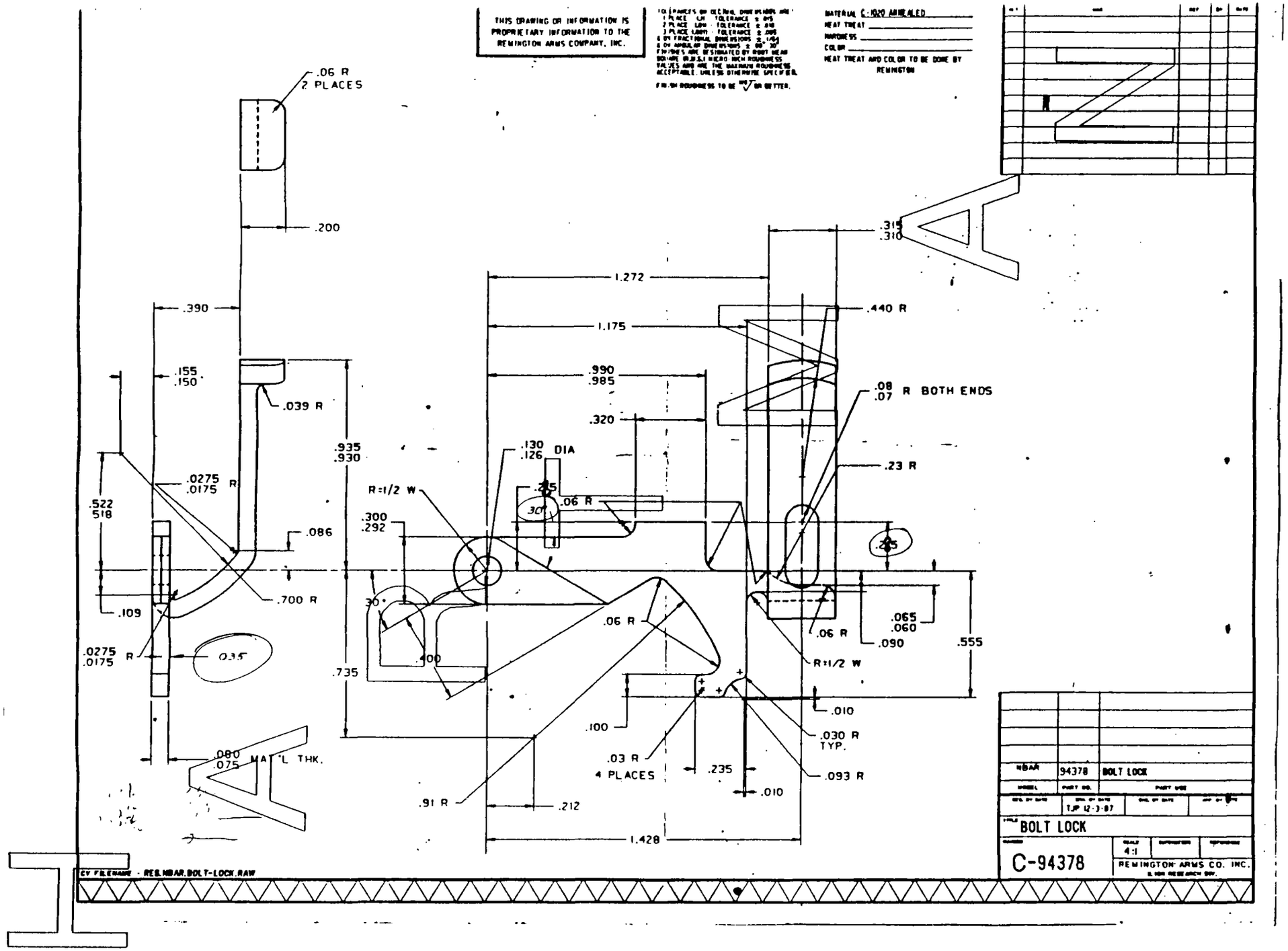

R2539788

CONFIDENTIAL-SUBJECT TO PROTECTIVE ORDER
KINZER V. REMINGTON

HARTMANN

N' BAR - "CV" FILE - LAYOUTS & DRAWINGS

T. G. BAUMAN 8-89

== LIST == 8- 7-89 15:57:37 FUTIL 10.27

RECORD	FILENAME	DATE	TIME
1	1 86/266 99/365 FUTIL 10.27 CGOS200X 4.0 ARCIVI ARCIVI		
1	RES.NBAR.STOCK.NC2.&PD	8-13-86	12:03:06
2	RES.NBAR.STOCK.NCI.&PD	5-15-86	21:59:24
3	RES.NBAR.STOCK.&PD	8-28-86	8:20:36
2	1 87/147 99/365 FUTIL 10.27 CGOS200X 4.0 ARCIVI ARCIVI		
1	RES.NBAR.BARREL.&PD	6-26-86	10:00:38
2	RES.NBAR.BARREL-ASSY.&PD	8- 4-86	7:15:21
3	RES.NBAR.BARREL-ASSY-COMPLETE.&PD	5-20-86	17:00:45
4	RES.NBAR.FOLLOWER-LA.&PD	6- 5-86	9:28:15
5	RES.NBAR.BARREL-VAR.&PD	6- 5-86	9:41:17
6	RES.NBAR.BARREL-MAG.&PD	8- 4-86	7:28:44
7	RES.NBAR.BOLT-BODY.&PD	10- 7-86	17:29:27
8	RES.NBAR.SCOPE-MOUNT-CLAMP.&PD	6-26-86	8:49:06
9	RES.NBAR.BOLT-BODY-ASSY.&PD	10- 7-86	17:26:06
10	RES.NBAR.STOCK-PLUG.&PD	6- 5-86	10:23:24
11	RES.NBAR.MAGAZINE-RELEASE.&PD	3-10-86	21:44:05
12	RES.NBAR.BOLT-HEAD.&PD	6-11-86	17:52:09
13	RES.NBAR.BOLT-HEAD-BLANK.&PD	4-15-86	18:16:23
14	RES.NBAR.BOLT-LATCH.&PD	7-22-86	9:06:09
15	RES.NBAR.BOLT-LATCH-PIVOT-PIN.&PD	6-26-86	8:57:06
16	RES.NBAR.BOLT-LOCK-PLUNGER.DSF.&PD	8- 1-86	11:14:40
17	RES.NBAR.BOLT-PIN.&PD	1- 6-86	13:41:48
18	RES.NBAR.BOLT-PLUG.&PD	2-17-87	19:54:13
19	RES.NBAR.BOLT-ASSY.TJP.&PD	10- 7-86	17:43:42
20	RES.NBAR.BOLT-PLUG-WASHER.SMM.&PD	3-12-86	14:22:34
21	RES.NBAR.BOLT-STOP.&PD	3-14-86	12:59:45
22	RES.NBAR.BOLT-STOP-RELEASE.&PD	3-18-86	9:02:30
23	RES.NBAR.BOLT-STOP-RELEASE.BLANK.&PD	9-24-85	10:20:30
24	RES.NBAR.EXP1600.BOLT-LATCH.DSF.&PD	8-29-86	14:56:00
25	RES.NBAR.SCOPE-MT-SWS-ASSY.TJP.&PD	8-28-86	8:34:59
26	RES.NBAR.TSTACK.MAG-BOTTOM-MAX.DSF.&PD	5-29-86	13:46:37
27	RES.NBAR.TSTACK.MAG-BOTTOM-MIN.DSF.&PD	5-29-86	14:07:18
28	RES.NBAR.EJECTOR.&PD	1-15-86	7:25:08
29	RES.NBAR.EJECTOR-WASHER.&PD	1-15-86	7:04:53
30	RES.NBAR.EXP1610.BOLT-LATCH.TJP.&PD	9- 8-86	14:08:48

CONFIDENTIAL-SUBJECT TO PROTECTIVE ORDER
KINZER V. REMINGTON

RECORD	FILENAME	DATE	TIME
31	RES.NBAR.EXTRACTOR-222.&PD	10- 3-85	9:12:45
32	RES.NBAR.EXTRACTOR-MAG.&PD	10- 9-85	10:14:43
33	RES.NBAR.FIRCTRL-PLATE-LFT.&PD	4- 4-86	9:37:27
34	RES.NBAR.FIRCTRL-PLATE-RT.&PD	3-26-86	7:50:23
35	RES.NBAR.FIRING-PIN-ASSY.&PD	6-26-85	22:00:15
36	RES.NBAR.FIRING-PIN-ASSY-LA.&PD	3-14-86	7:10:34
37	RES.NBAR.FIRING-PIN-CROSS-PIN.&PD	3-12-86	13:05:49
38	RES.NBAR.FIRING-PIN-LA.&PD	6-26-86	9:37:28
39	RES.NBAR.FIRING-PIN-SA.&PD	1- 8-86	8:04:11
40	RES.NBAR.FIRING-PINHEAD.&PD	9-12-86	19:25:45
41	RES.NBAR.EXP-1627.BOLT-PLUG.SET-SCREW-BOLT-LOCK.EAK.&PD	10- 6-86	14:15:32
42	RES.NBAR.FRONT-SPACER.&PD	3-12-86	12:50:54
43	RES.NBAR.EXP-MAG-LATCH.TJP.&PD	10-14-86	21:07:32
44	RES.NBAR.GUARD-SCREW.&PD	7-16-86	9:37:22
45	RES.NBAR.EXP-MAG-LAT-RET.TJP.&PD	10-14-86	20:56:59
46	RES.NBAR.EXP-MAG-LAT-TP.TJP.&PD	10-14-86	20:51:41
47	RES.NBAR.EXP-MAG-LAT-TP.FHS.&PD	10- 6-86	14:34:20
48	RES.NBAR.EXP-MAG-LAT-FP.TJP.&PD	10-14-86	20:59:16
49	RES.NBAR.EXP-1629.BOLT-LOCK.SET-SCREW.DSF.&PD	12-10-86	11:52:10
50	RES.NBAR.MAG-RELEASE.TJP.&PD	6- 6-86	9:21:48
51	RES.NBAR.EXP-MAG-LAT-KLC.TJP.&PD	12- 3-86	19:20:05
52	RES.NBAR.EXP-1635.MAG-LATCH-LEVER.FHS.&PD	10- 8-86	19:49:02
53	RES.NBAR.MAGAZINE-BOTTOM.&PD	6-26-86	7:11:57
54	RES.NBAR.MAGAZINE-LA.&PD	6- 6-86	10:22:48
55	RES.NBAR.EXP-1636.MAG-LATCH-PIN.FHS.&PD	10- 8-86	19:41:40
56	RES.NBAR.EXP-1637.MAG-LATCH-PIVOT-PIN.FHS.&PD	10-14-86	6:50:28
57	RES.NBAR.EXP-1638.MAG-BOX.FHS.&PD	10-17-86	10:24:34
58	RES.NBAR.BOLT-LOCK-REDESIGN.TJP.&PD	10-14-86	22:03:05
59	RES.NBAR.REAR-GUARD-SCREW.&PD	7-22-86	15:02:13
60	RES.NBAR.REAR-MAG-LATCH.&PD	5-28-86	10:40:05
61	RES.NBAR.REAR-SPACER.&PD	3-12-86	12:55:27
62	RES.NBAR.RECEIVER.&PD	2-11-87	8:30:59
63	RES.NBAR.EXP-BOLT-PLUG.EAK.&PD	10-29-86	8:43:23
64	RES.NBAR.RIVET.&PD	6-26-86	8:28:24
65	RES.NBAR.EXP-1643.BOLT-LOCK.SET-SCREW.TJP.&PD	10-14-86	17:30:18
66	RES.NBAR.SAFETY.&PD	3-12-86	11:53:48
67	RES.NBAR.SAFETY-ASSY.&PD	7-30-86	7:52:54
68	RES.NBAR.SAFETY-BUTTON.&PD	3-12-86	10:45:37
69	RES.NBAR.SAFETY-PIVOT-PIN.&PD	4-14-86	7:29:48

CONFIDENTIAL-SUBJECT TO PROTECTIVE ORDER
KINZER V. REMINGTON

RECORD	FILENAME	DATE	TIME
70	RES.NBAR.SCOPE-MOUNT.CRASH	2-14-85	14:21:01
71	RES.NBAR.SCOPE-MOUNT.&PD	8- 5-86	16:06:22
72	RES.NBAR.SCOPE-MOUNT-ASSY.&PD	6-26-86	8:19:17
73	RES.NBAR.SCOPE-MOUNT-NUT.&PD	6-26-86	9:00:33
74	RES.NBAR.SCOPE-MOUNT-RING.&PD	6-11-86	12:51:29
75	RES.NBAR.SEAR-SAFETY-CAM.&PD	6-26-86	8:03:24
76	RES.NBAR.EXP-DETENT-PLUNGER.EAK.&PD	10-28-86	16:11:18
77	RES.NBAR.STD-EXTRACTOR.&PD	6-24-86	7:48:52
78	RES.NBAR.STOCK.&PD	3-10-87	10:10:49
79	RES.NBAR.STOCK.NCI.&PD	11- 6-86	15:48:03
80	RES.NBAR.STOCK-INSERT.&PD	10- 8-86	16:09:23
81	RES.NBAR.STOCK-RIVET.&PD	6-26-86	8:34:43
82	RES.NBAR.STOCK-WASHER.&PD	1- 6-86	13:57:45
83	RES.NBAR.TRIG-ADJ-LEVER.&PD	4-14-86	7:47:21
84	RES.NBAR.TRIG-PULL-ADJ-SCREW.&PD	6-30-86	9:37:31
85	RES.NBAR.TRIG-PULL-PLUNGER.&PD	6-26-86	8:50:50
86	RES.NBAR.TRIGGER.SMM.&PD	2-20-87	21:37:47
87	RES.NBAR.TRIGGER-ADJUSTMENT.&PD	8- 2-85	9:42:14
88	RES.NBAR.TRIGGER-ASSY.&PD	5-16-86	8:27:55
89	RES.NBAR.EXP-BOLT-LOCK.TJP.&PD	11- 4-86	8:31:39
90	RES.NBAR.TRIGGER-ASSY-PIN.&PD	4-16-86	8:39:52
91	RES.NBAR.TRIGGER-BLK-PLUNGER.&PD	6-24-86	15:41:54
92	RES.NBAR.TRIGGER-GUARD.&PD	7- 2-86	18:27:11
93	RES.NBAR.TRIGGER-HOUSING-ASSY.&PD	4- 4-86	9:48:50
94	RES.NBAR.TRIGGER-SPRING.&PD	1-13-86	13:54:02
95	RES.NBAR.BEXP1700.MAG.FOLLOWER.SPRING.&PD	5- 8-87	10:01:11
96	RES.NBAR.CEXB1698.MAGAZINE.BOX.BLANK.&PD	3-31-87	11:32:16

3 1 87/222 99/365 FUTIL 10.27 CGOS200X 4.0 ARCIV1 ARCIV1

1	RES.WFP.NBAR.BOLT-LOCK-REDESIGN.&PD	10- 7-86	8:32:14
2	RES.WFP.NBAR.BOLT-LOCK-REDESIGN.SET-SCREW.&PD	10- 8-86	8:05:51
3	RES.WFP.NBAR.BOLT-LOCK-REDESIGN.SET-SCREW.&PD	10- 8-86	8:05:51

4 1 88/289 99/365 FUTIL 10.27 CGOS200X 4.0 ARCIV1 ARCIV1

1	RES.NBAR.BARREL.&PD	6-26-86	10:00:38
2	RES.NBAR.BARREL-ASSY.&PD	8- 4-86	7:15:21
3	RES.NBAR.BARREL-MAG.&PD	8- 4-86	7:28:44
4	RES.NBAR.BARREL-VAR.&PD	6- 5-86	9:41:17
5	RES.NBAR.BBL-NEW-CONTOUR.RAW.&PD		

RECORD	FILENAME	DATE	TIME
6	RES.NBAR.BBL-NEW-CONTOUR-MAG.RAW.&PD	8-22-88	13:18:20
7	RES.NBAR.BBL-NEW-CONTOUR-VAR.RAW.&PD	8-22-88	13:35:57
8	RES.NBAR.BOLT-ASSY.TJP.&PD	8-22-88	13:07:38
9	RES.NBAR.BOLT-BODY.&PD	10- 1-87	10:30:11
10	RES.NBAR.BOLT-BODY-ASSY.&PD	1-29-88	8:13:37
11	RES.NBAR.BOLT-BODY-MAX.RAW.&PD	10- 7-86	17:26:06
12	RES.NBAR.BOLT-BODY-MIN.RAW.&PD	2- 1-88	6:44:49
13	RES.NBAR.BOLT-HEAD.&PD	1-29-88	22:09:06
14	RES.NBAR.BOLT-HEAD-BLANK.&PD	6-11-86	17:52:09
15	RES.NBAR.BOLT-LOCK.RAW.&PD	4-15-86	18:16:23
16	RES.NBAR.BOLT-LOCK-MAX.RAW.&PD	3-28-88	21:32:45
17	RES.NBAR.BOLT-LOCK-MIN.EAK.&PD	3-18-88	19:22:20
18	RES.NBAR.BOLT-PIN.&PD	3-17-88	21:26:04
19	RES.NBAR.BOLT-PLUG.&PD	1- 6-86	13:41:48
20	RES.NBAR.BOLT-PLUG-WASHER.SMM.&PD	11-29-87	10:58:15
21	RES.NBAR.BOLT-STOP.WFP.&PD	3-12-86	14:22:34
22	RES.NBAR.DEXP1782.0.MAG-RELEASE.RAW.&PD	3- 4-88	19:21:04
23	RES.NBAR.DEXP1782.NC.MAG-RELEASE.GDS.&PD	1- 6-88	12:46:25
24	RES.NBAR.EJECTOR.&PD	12-28-87	8:45:50
25	RES.NBAR.EJECTOR-WASHER.&PD	1-15-86	7:25:08
26	RES.NBAR.EXP-1637.MAG-LATCH-PIVOT-PIN.FHS.&PD	1-15-86	7:04:53
27	RES.NBAR.EXTRACTOR-222.&PD	10-14-86	8:50:28
28	RES.NBAR.EXTRACTOR-MAG.&PD	10- 3-85	9:12:45
29	RES.NBAR.FIRCTRL-PLAT-LFT-MIN.EAK.&PD	10- 9-85	10:14:43
30	RES.NBAR.FIRCTRL-PLAT-LT-MAX.RAW.&PD	3-16-88	21:18:05
31	RES.NBAR.FIRCTRL-PLATE-LFT.&PD	3-16-88	20:28:49
32	RES.NBAR.FIRCTRL-PLATE-RT.&PD	2-25-87	20:09:57
33	RES.NBAR.FIRCTRL-PLATE-RT-MAX.RAW.&PD	1- 5-88	18:56:10
34	RES.NBAR.FIRCTRL-PLATE-RT-MIN.EAK.&PD	1- 5-88	22:11:45
35	RES.NBAR.FIRING-PIN-ASSY-LA.&PD	1- 6-88	20:34:23
36	RES.NBAR.FIRING-PIN-CROSS-PIN.&PD	3-14-86	7:10:34
37	RES.NBAR.FIRING-PIN-LA.&PD	3-12-86	13:05:49
38	RES.NBAR.FIRING-PIN-LA-MAX.EAK.&PD	1-29-88	13:14:16
39	RES.NBAR.FIRING-PIN-LA-MIN.EAK.&PD	1-29-88	21:20:19
40	RES.NBAR.FIRING-PIN-SA.&PD	1-29-88	21:22:30
41	RES.NBAR.FIRING-PINHEAD.&PD	1- 8-86	8:04:11
42	RES.NBAR.FIRING-PINHEAD-MAX.RAW.&PD	1-29-88	8:03:43

CONFIDENTIAL-SUBJECT TO PROTECTIVE ORDER
KINZER V. REMINGTON

RECORD	FILENAME	DATE	TIME
43	RES.NBAR.FIRING-PINHEAD-MIN.RAW.&PD	2- 1-88	8:01:03
44	RES.NBAR.FOLLOWER-LA.&PD	2- 1-88	13:38:44
45	RES.NBAR.FRONT-SPACER.&PD	5- 3-88	18:26:23
46	RES.NBAR.FRONT-SPACER-MAX.RAW.&PD	2-25-87	16:35:03
47	RES.NBAR.FRONT-SPACER-MIN.RAW.&PD	3-16-88	20:21:30
48	RES.NBAR.GUARD-SCREW.&PD	3-16-88	20:54:53
49	RES.NBAR.MAG-BOX.RAW.&PD	7-16-86	9:37:22
50	RES.NBAR.MAG-RELEASE.NC.RAJ.&PD	3- 4-88	11:28:23
51	RES.NBAR.MAG-RELEASE.RAJ.&PD	5- 3-88	13:20:03
52	RES.NBAR.MAGAZINE-LA.&PD	4-27-88	15:42:49
53	RES.NBAR.NEW-REC-STYLING.DSF.&PD	6- 6-86	10:22:48
54	RES.NBAR.PLATE-RT-MAX.EAK.&PD	4- 5-88	10:14:58
55	RES.NBAR.PLATE-RT-MIN.EAK.&PD	1- 7-88	16:09:31
56	RES.NBAR.REAR-GUARD-SCREW.&PD	1- 6-88	22:14:56
57	RES.NBAR.REAR-SPACER.&PD	7-22-86	15:02:13
58	RES.NBAR.REAR-SPACER-MAX.EAK.&PD	11-29-87	9:44:54
59	RES.NBAR.REAR-SPACER-MIN.EAK.&PD	1- 5-88	17:03:37
60	RES.NBAR.RECEIVER.&PD	1- 5-88	9:19:16
61	RES.NBAR.RIVET.&PD	11-29-87	9:53:59
62	RES.NBAR.RIVET-MAX.EAK.&PD	6-26-86	8:28:24
63	RES.NBAR.RIVET-MIN.RAW.&PD	1- 4-88	21:04:02
64	RES.NBAR.SAFETY-ASSY.&PD	1- 7-88	17:26:00
65	RES.NBAR.SAFETY-BUTTON.&PD	2-26-87	20:29:52
66	RES.NBAR.SAFETY-LEVER.TJP.&PD	3-12-86	10:45:37
67	RES.NBAR.SAFETY-LEVER-MAX.RAW.&PD	1- 6-88	15:45:15
68	RES.NBAR.SAFETY-LEVER-MIN.EAK.&PD	1- 8-88	21:16:17
69	RES.NBAR.SAFETY-PIN.MIN.EAK.&PD	1-11-88	17:35:37
70	RES.NBAR.SAFETY-PIN-MAX.EAK.&PD	1- 4-88	19:42:37
71	RES.NBAR.SAFETY-PIVOT-PIN.&PD	1- 4-88	20:15:37
72	RES.NBAR.SCOPE-MOUNT.&PD	12-21-87	16:47:41
73	RES.NBAR.SCOPE-MOUNT.CRASH	3-17-88	22:23:00
74	RES.NBAR.SCOPE-MOUNT-ASSY.&PD	2-14-85	14:21:01
75	RES.NBAR.SCOPE-MOUNT-CLAMP.&PD	3-17-88	22:14:07
76	RES.NBAR.SCOPE-MOUNT-NUT.&PD	3-17-88	20:16:26
77	RES.NBAR.SCOPE-MOUNT-RING.&PD	6-26-86	9:00:33
78	RES.NBAR.SEAR-MAX.RAW.&PD	6-11-86	12:51:29
79	RES.NBAR.SEAR-MIN.RAW.&PD	1-14-88	6:47:33
80	RES.NBAR.SEAR-SAFETY-CAM.&PD	1- 5-88	21:12:12
81	RES.NBAR.STOCK.&PD	1- 4-88	17:26:42
82	RES.NBAR.STOCK.NCI.&PD	3-10-87	16:10:49
83	RES.NBAR.STOCK-INSERT.&PD	2-25-87	16:47:50
84	RES.NBAR.STOCK-PLUG.&PD	10- 8-86	16:09:23
85	RES.NBAR.STOCK-RIVET.&PD	6- 5-86	10:23:24
86	RES.NBAR.STOCK-WASHER.&PD	6-26-86	8:34:43
		1- 6-86	13:57:45

CONFIDENTIAL-SUBJECT TO PROTECTIVE ORDER
KINZER V. REMINGTON

RECORD	FILENAME	DATE	TIME
87	RES.NBAR.T-P-ASSY-MAX-FM.TJP.&PD	2- 8-88	19:36:42
88	RES.NBAR.TRIG-ASSY-MAX.TJP.&PD	1- 8-88	21:57:58
89	RES.NBAR.TRIG-PLATE-ASSY-MAX.TJP.&PD	2- 8-88	15:27:46
90	RES.NBAR.TRIG-PLATE-ASSY-MIN.TJP.&PD	1-28-88	16:04:35
91	RES.NBAR.TRIG-PLUNGER-MAX.EAK.&PD	1-13-88	17:51:01
92	RES.NBAR.TRIG-PLUNGER-MIN.EAK.&PD	1-13-88	17:47:33
93	RES.NBAR.TRIG-PULL-ADJ-SCREW.&PD	2-26-87	16:27:02
94	RES.NBAR.TRIG-PULL-PLUNGER.&PD	11-30-87	8:49:38
95	RES.NBAR.TRIGGER.SMM.&PD	1- 7-88	8:39:56
96	RES.NBAR.TRIGGER-ASSY.&PD	5- 6-88	22:04:45
97	RES.NBAR.TRIGGER-ASSY-MIN.TJP.&PD	1-21-88	15:28:58
98	RES.NBAR.TRIGGER-BLK-PLUNGER.&PD	2-25-87	16:08:33
99	RES.NBAR.TRIGGER-GUARD.TJP.&PD	10-13-88	14:52:26
100	RES.NBAR.TRIGGER-GUARD.TJP.EEXP1360	10-13-88	14:52:31
101	RES.NBAR.TRIGGER-GUARD.TJP.1	10-12-88	20:56:22
102	RES.NBAR.TRIGGER-HOUSING-ASSY.&PD	11-29-87	10:10:09
103	RES.NBAR.TRIGGER-MAX.RAW.&PD	1- 8-88	12:42:40
104	RES.NBAR.TRIGGER-MIN.EAK.&PD	1- 8-88	12:56:20
105	RES.NBAR.TRIGGER-PLUNGER-MAX.EAK.&PD	1-13-88	17:58:22
106	RES.NBAR.TRIGGER-PLUNGER-MIN.EAK.&PD	3-16-88	20:41:37

5 1 89/016 99/365 FUTIL 10.27 CG0S200X 4.0 ARCIVI ARCIVI

1	RES.NBAR.TRIGGER-GUARD.TJP.&PD	10-27-88	14:03:59
2	RES.NBAR.BBL-NEW-CONTOUR.RAW.&PD	8-22-88	13:18:20
3	RES.NBAR.BBL-NEW-CONTOUR-MAG.RAW.&PD	8-22-88	13:35:57
4	RES.NBAR.BOLT-ASSY.TJP.&PD	10- 1-87	10:30:11
5	RES.NBAR.BOLT-HEAD.&PD	6-11-86	17:52:09
6	RES.NBAR.BOLT-LOCK.RAW.&PD	3-28-88	21:32:45
7	RES.NBAR.FIRCTRL-PLATE-LFT.&PD	2-25-87	20:09:57
8	RES.NBAR.FIRCTRL-PLATE-RT.&PD	1- 5-88	18:56:10
9	RES.NBAR.FIRING-PIN-ASSY-LA.&PD	3-14-86	7:10:34
10	RES.NBAR.FRONT-SPACER.&PD	2-25-87	16:35:03
11	RES.NBAR.GUARD-SCREW.&PD	7-16-86	9:37:22
12	RES.NBAR.REAR-GUARD-SCREW.&PD	7-22-86	15:02:13

CONFIDENTIAL-SUBJECT TO PROTECTIVE ORDER
KINZER V. REMINGTON

RECORD	FILENAME	DATE	TIME
13	RES.NBAR.REAR-SPACER.&PD	11-29-87	9:44:54
14	RES.NBAR.FIRING-PINHEAD.&PD	1-29-88	8:03:43
15	RES.NBAR.RECEIVER.&PD	11-29-87	9:53:59
16	RES.NBAR.SAFETY-ASSY.&PD	2-26-87	20:29:52
17	RES.NBAR.SAFETY-PIVOT-PIN.&PD	12-21-87	16:47:41
18	RES.NBAR.SEAR-SAFETY-CAM.&PD	1- 4-88	17:26:42
19	RES.NBAR.STOCK.&PD	3-10-87	16:10:49
20	RES.NBAR.STOCK-INSERT.&PD	10- 8-86	16:09:23
21	RES.NBAR.TRIGGER-ASSY.&PD	5- 6-88	22:04:45
22	RES.NBAR.TRIGGER-BLK-PLUNGER.&PD	2-25-87	16:08:33
23	RES.NBAR.TRIGGER-HOUSING-ASSY.&PD	11-29-87	10:10:09

HARTMAN

```
== LIST ==      1-18-89 19:00:49 FUTIL 10.27
RECORD FILENAME                                DATE      TIME


 1      1  86/266  99/365 FUTIL 10.27          CGOS200X  4.0   ARCIVI  ARCIVI

 1 RES.700.A17029.14.MAIN-SPRING-LA.&PD
                                               8- 5-85 12:47:00
 2 RES.700.A17058.23.MAIN-SPRING-SA.&PD
                                               8- 5-85 12:39:43
 3 RES.700.A3632.0.TRIG-BLK-PLUNGER-SPG.&PD
                                               8- 5-85 11:27:31
 4 RES.700.B14630.11.FRONT-SPACER.&PD
                                               7-31-85 22:39:43
 5 RES.700.B14631.15.REAR-SPACER.&PD
                                               7-31-85 22:41:24
 6 RES.700.B15224.13.SPRING-TORSION.&PD
                                               8-30-85  8:51:01
 7 RES.700.B17013.25.BOLT-STOP.&PD
                                               7-24-85 22:59:53
 8 RES.700.B17043.32.PIN.&PD                   8-29-85 17:39:06
 9 RES.700.B17044.21.SAFETY-CLIP.&PD
                                               1- 7-86  6:10:18
10 RES.700.C15368.17.SPRING.&PD                3-13-86 13:05:10
11 RES.700.C15478.15.BOLT-STOP-RELEASE.&PD
                                               9- 4-85 13:41:36
12 RES.700.D26330.28.BOLT-HANDLE.&PD
                                               3-14-86 14:11:32
13 RES.700.D26330.29.BOLT-HANDLE.&PD
                                               6-19-86 21:48:40
14 RES.700.D33580.0.RECEIVER-222-223-LH.&PD
                                              11- 5-85 21:57:21
15 RES.700.D33580.12.RECEIVER-222-223-RH.&PD
                                              11- 5-85 20:25:40
16 RES.700.D92762.1.RECOIL-PAD.&PD
                                               4- 3-85 18:39:41
17 RES.700.E33225.27.RECEIVER-LA-RH.&PD
                                               3- 7-86 18:36:17
18 RES.700.E33225.28.RECEIVER-LA-RH.&PD
                                               8-21-86 12:54:57
19 RES.700.E33225.28.RECEIVER-LA-RH.DSF.&PD
                                               9-23-86  9:16:37
20 RES.700.E33226.0.RECEIVER-SA-RH.&PD
                                               7-31-86 14:33:30
21 RES.700.E33265.10.RECEIVER-LA-LH.&PD
                                               7-29-86 22:45:18
22 RES.700.E33266.10.RECEIVER-SA-LH.&PD
                                              10- 9-85 22:00:14
23 RES.700.FP-ASSY-LAYOUT.&PD                  1-28-86 21:17:56
24 RES.700.MAG-LATCH-MP01.&PD                  3-24-86  8:53:32


 2      1  86/266  99/365 FUTIL 10.27          CGOS200X  4.0   ARCIVI  ARCIVI

 1 RES.KLC.700MR.E100570.&PD                   9- 5-86 18:17:13
```

HARMAN

RECORD	FILENAME	DATE	TIME
2	RES.KLC.BUTTPT.&NFIG	10-30-84	9:25:36
3	RES.KLC.FENDPT.&NFIG	10-30-84	9:52:50
4	RES.KLC.MIDPT.&NFIG	10-30-84	9:36:35
5	REM.RES.KLC.BUTTPT.&NFIG	10-30-84	9:25:36
6	REM.RES.KLC.FENDPT.&NFIG	10-30-84	9:52:50
7	REM.RES.KLC.MIDPT.&NFIG	10-30-84	9:36:35
8	RES.RJS.700MR.E100570.NC1.&PD	9-10-86	14:43:23
9	RES.RJS.700MR.E100570.NC0.&PD	9-15-86	17:49:51

3 1 87/221 99/365 FUTIL 10.27 CGOS200X 4.0 ARCIVI ARCIVI

1 RES.700.E33225.34.RECEIVER-LA-RH.DSF.&PD
6-24-87 14:04:32
2 RES.700.E33226.1.RECEIVER-SA-RH.FHS.&PD
4- 6-87 8:05:10
3 RES.700.E33266.0.RECEIVER-SA-LH.FHS.&PD
8- 7-87 16:21:14

4 1 88/166 99/365 FUTIL 10.27 CGOS200X 4.0 ARCIVI ARCIVI

1 RES.700.A17044.20.CLIP-MAX.WFP.&PD
10-15-87 16:58:16
2 RES.700.A17044.20.CLIP-MIN.WFP.&PD
10-15-87 16:12:57
3 RES.700.B14630.14.SPACER-FRONT-MAX.&PD
12- 8-87 11:41:43
4 RES.700.B14630.14.SPACER-FRONT-MIN.RAW.&PD
12- 8-87 11:20:32
5 RES.700.B15368.16.SPRING-MAX.RAW.&PD
10-19-87 9:08:07
6 RES.700.B15368.16.SPRING-MIN.RAW.&PD
10-19-87 9:04:24
7 RES.700.B17043.32.SAFETY-PIN-MAX.RAW.&PD
10-15-87 10:47:44
8 RES.700.B17043.32.SAFETY-PIN-MIN.RAW.&PD
10-16-87 9:09:07
9 RES.700.B17053.31.TRIG-STOP-SCREW-MAX.WFP.&PD
12- 8-87 17:19:14
10 RES.700.B17053.31.TRIG-STOP-SCREW-MIN.RAW.&PD
12- 8-87 14:18:51
11 RES.700.B23220.46.SAFETY-DETENT-BALL.WFP.&PD
10-15-87 17:25:50
12 RES.700.C15280.30.TRIGGER-MAX.RAW.&PD
12- 8-87 13:45:50
13 RES.700.C15280.30.TRIGGER-MIN.WFP.&PD
12- 8-87 19:22:04
14 RES.700.C15478.15.BOLT-STOP-RELEASE.WFP.&PD
3-21-88 22:08:21
15 RES.700.C15666.23.SEAR-MAX.EAK.&PD
12- 8-87 17:21:23
16 RES.700.C15666.23.SEAR-MIN.TJP.&PD
12- 8-87 16:58:14
17 RES.700.C19461.19.CONNECTOR-MAX.FHS.&PD

CONFIDENTIAL-SUBJECT TO PROTECTIVE ORDER
KINZER V. REMINGTON

RECORD	FILENAME	DATE	TIME
18	RES.700.C19461.19.CONNECTOR-MIN.WFP.&PD	12- 8-87	13:41:15
19	RES.700.C26655.20.TRIG-HOUS-ASSY-MAX.EAK.&PD	12- 8-87	16:35:41
20	RES.700.C26655.20.TRIG-HOUS-ASSY-MIN.EAK.&PD	12- 9-87	6:10:57
21	RES.700.C30780.13.PLATE-MAX.RAW.&PD	12- 9-87	6:17:02
22	RES.700.C30780.13.PLATE-MIN.RAW.&PD	12- 8-87	10:22:35
23	RES.700.C30780.13.RH-PLATE-MAX.WFP.&PD	12- 8-87	10:30:12
24	RES.700.C30780.13.RH-PLATE-MIN.WFP.&PD	10-19-87	17:57:15
25	RES.700.C92212.2.SAFETY-MAX.RAW.&PD	10-19-87	17:34:48
26	RES.700.C92212.2.SAFETY-MAX.TJP.&PD	10-23-87	7:27:36
27	RES.700.C92212.2.SAFETY-MIN.RAW.&PD	1-14-88	6:36:07
28	RES.700.E33225.34.REC-SAFETY.FHS.&PD	10-23-87	7:24:42
29	RES.700.E33225.34.RECEIVER-LA-RH.DSF.&PD	1-13-88	13:36:04
30	RES.700.E33226.2.RECEIVER-SA-RH.FHS.&PD	8-25-87	6:52:42
31	RES.700.E33265.11.RECEIVER-LA-LH.FHS.&PD	6- 9-88	9:41:06
32	RES.700.E33266.0.RECEIVER-SA-LH.FHS.&PD	4- 2-87	8:50:50
33	RES.700.FLRECNTRL-ASSY.MAX-MIN-LAYOUT.DSF.&PD	9-24-87	13:30:43
34	RES.700.FLRECNTRL-ASSY.SAFETY.DSF.&PD	1-13-88	10:35:01
35	RES.700.FORMER.COPYING-ROLL.&RD	1-15-88	8:37:13
36	RES.700.LB553.0.CHAMBER-DWG-300WM.FHS.&PD	10-15-86	15:58:00
37	RES.700.RECEIVER-BLANK-ANGLE.FHS.&PD	1- 6-88	7:26:19
38	RES.700.RECEIVER-END-VIEW.FHS.&PD	3- 1-88	12:37:06
39	RES.700.SWS.B94340.0.RETAINING-PIN.TJP.&PD	2-12-88	13:36:11
40	RES.700.SWS.C94339.0.PIN.TJP.&PD	9-10-87	15:20:59
41	RES.700.SWS.C94341.0.GAGE-PLUG-ASSY.TJP.&PD	9-10-87	15:24:37
42	RES.700.SWS.CEXP1756.0.750LB-TEST-CONE.DSF.&PD	9-10-87	15:49:33
43	RES.700.SWS.CEXP1765.0.WOOD-DIRT-BOX.DSF.&PD	9-10-87	15:26:32
44	RES.700.SWS.D94338.0.GAGE-PLUG.TJP.&PD	9-11-87	8:17:49
45	RES.700.SWS.EJECTION-CHART.DSF.&PD	9-10-87	15:22:55
		9-21-87	16:08:56

CONFIDENTIAL-SUBJECT TO PROTECTIVE ORDER
KINZER V. REMINGTON

```
RECORD FILENAME                                    DATE      TIME

  46 RES.700.TRIG-MAX-MIN-ASSY.DSF.&PD
                                                 12-11-87 11:20:55

   5     1  88/166  99/365 FUTIL 10.27          CGOS200X  4.0   ARCIV1  ARCIV1
   1 RES.700SWS.E96021.0.STOCK.FHS.&PD
                                                 4-22-87 13:26:08

   6     1  88/287  99/365 FUTIL 10.27          CGOS200X  4.0   ARCIV1  ARCIV1
   1 RES.700.C15280.30.TRIGGER-MAX.RAW.&PD
                                                 6-30-88  9:22:05
   2 RES.700.C15666.23.SEAR-MAX.EAK.&PD
                                                12- 8-87 17:21:23
   3 RES.700.C19461.19.CONNECTOR-MAX.FHS.&PD
                                                12- 8-87 13:41:15
   4 RES.700.C92212.2.SAFETY-MAX.RAW.&PD
                                                10-23-87  7:27:36
   5 RES.700.E33225.34.RECEIVER-LA-RH.DSF.&PD
                                                 8-25-87  6:52:42
   6 RES.700.SWS.RECEIVER-BARREL.LAYOUT.DSF.&PD
                                                 9- 9-88 12:57:52
   7 RES.700.E33226.2.RECEIVER-SA-RH.FHS.&PD
                                                 9-23-88 14:05:46
   8 RES.700.B103750.0.ARYLON-STOCK.FHS.&PD
                                                 9-28-88  9:57:15

   7     1  88/334  99/365 FUTIL 10.27          CGOS200X  4.0   ARCIV1  ARCIV1
   1 RES.700.C15280.30.TRIGGER-MAX.RAW.&PD
                                                10-17-88  8:41:53
   2 RES.700.C15666.23.SEAR-MAX.EAK.&PD
                                                12- 8-87 17:21:23
   3 RES.700.C19461.19.CONNECTOR-MAX.FHS.&PD
                                                12- 8-87 13:41:15
   4 RES.700.C92212.2.SAFETY-MAX.RAW.&PD
                                                10-23-87  7:27:36
   5 RES.700.E33225.35.RECEIVER-LA-RH.DSF.&PD
                                                10-18-88 15:38:46
   6 RES.700.SWS.RECEIVER-BARREL.LAYOUT.DSF.&PD
                                                 9- 9-88 12:57:52
   7 RES.700.E33226.3.RECEIVER-SA-RH.FHS.&PD
                                                10-26-88  8:43:49
   8 RES.700.B103750.0.ARYLON-STOCK.FHS.&PD
                                                11- 8-88  9:49:37
   9 RES.700.E33265.12.RECEIVER-LA-LH.FHS.&PD
                                                10-18-88 16:40:36
  10 RES.700.E33266.1.RECEIVER-SA-LH.FHS.&PD
                                                10-18-88 17:21:36
  11 RES.700.B17044.21.SAFETY-CLIP.&PD
                                                 1- 7-86  6:10:18
```

CONFIDENTIAL-SUBJECT TO PROTECTIVE ORDER
KINZER V. REMINGTON

```
RECORD FILENAME                                  DATE      TIME

  12 RES.700.LB554.0.416-REM-MAG-REM-ONLY.WFP.&PD
                                                 10-25-88 16:57:27
  13 RES.700.LB554.0.416-REM-MAG-INQUIRIE.WFP.&PD
                                                 10-25-88 16:59:45

   8     1  89/018  99/365 FUTIL J0.27          CGOS200X  4.0   ARCIVI  ARCIVI

   1 RES.700.MR-STOCK-INLETTING.&PD
                                                 1-17-89 10:57:32
   2 RES.700.EXP1539.BDL-SYN-STK.&PD
                                                 1-18-89  8:21:14
```

HARTMAN

CONFIDENTIAL-SUBJECT TO PROTECTIVE ORDER
KINZER V. REMINGTON

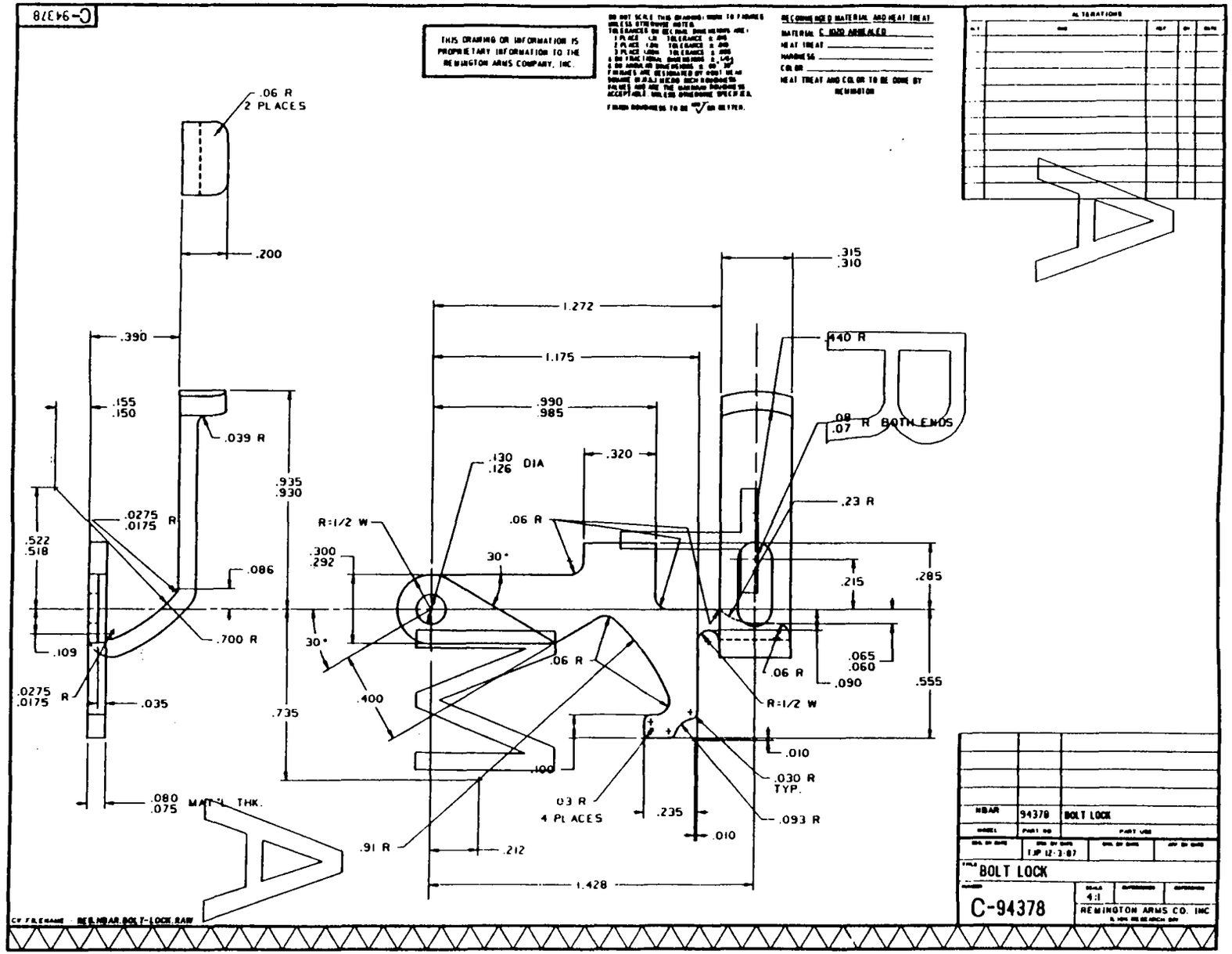

R2539802

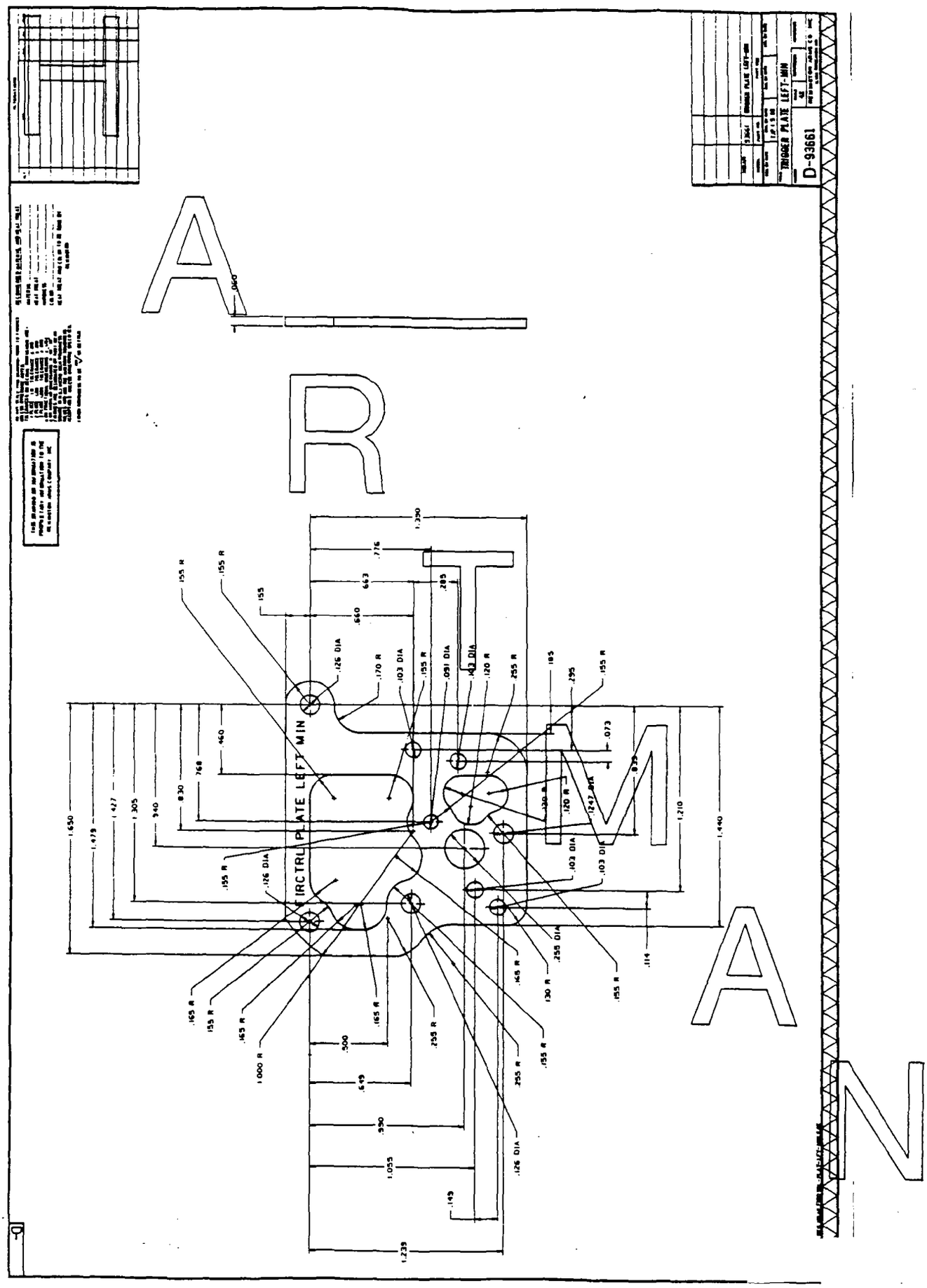
TRIGGER PLATE LEFT-MIN
D-93661
CIRCTRL PLATE LEFT MIN

Ilion Research Division

PARTS LIST #127

Supersedes Previous Model 700 Classic Parts List #114

Date:
09/22/89
11/22/89

MODEL 700 RIFLE - "CLASSIC" FOR 1990
BOLT ACTION REPEATER CENTERFIRE
.25-06 REMINGTON

Sheet 1 of 3

(Dotted line (----) indicates same part number

DWG. NO.	PART NAME	.25-06 REMINGTON PART NUMBERS
	Caliber 25-06 RAMAC	5907
	BAG ASSEMBLY COMPLETE	1721
	Firearm Safety Booklet Rev. 6/89	1410
	Instruction Book (RD 3461 Rev. 288)	3391
	Polybag 7x10x.0015	1452
	Product Owners Card	1426
	Remington Authorized Gunsmith (Form RD 6860 Rev. 789)	3413
	CARTON ASSEMBLY	1443
	Hang Tag (RD 6961)	3451
	Hang Tag Label & Box End Label	993002
	BARREL ASSEMBLY COMPLETE	
B-31535	.25-06 REM.	94655
	BARREL ASSEMBLY (Marking D-15360)	
D-33450	.25-06 REM.	94656
	BARREL	
D-26285	.25-06 REM.	26295
B-14810	Barrel Bracket (Blk. A-15128)	14810
E-33225	Receiver (Blk. B-31495)	33225
D-28710	Bolt Assembly	28712
D-28695	Bolt Body Assembly	28697
C-20200	Bolt Body	20200
A-18493	Bolt Body Brazing Slug	18493
D-28665	Bolt Head (Blk. C-32820)	28665
A-18758	Bolt Pin	18758
B-17011	Ejector Washer	17011
D-26330	Bolt Handle (Blk. D-91562)	26330
C-20185	Bolt Handle Brazing Shim	20186
A-17017	Ejector (Blk. A-13974)	17017
A-94555	Ejector Pin	94555
A-17019	Ejector Spring	17019
C-91837	Extractor (Blk. A-91929)	91837

CONFIDENTIAL-SUBJECT TO PROTECTIVE ORDER
KINZER V. REMINGTON

Ilion Research Division

Date:
09/22/89
11/22/89

MODEL 700 RIFLE - "CLASSIC" FOR 1990
BOLT ACTION REPEATER CENTERFIRE
.25-06 REMINGTON

Sheet 2
of 3

(Dotted line (----)
indicates same part number

DWG. NO.	PART NAME	.25-06 REMINGTON PART NUMBERS
B-22040	FIRING PIN ASSEMBLY	22040
C-17012	Bolt Plug (Blk. C-19894)	17012
C-22020	Firing Pin (Blk. C-28805)	22020
B-17022	Firing Pin Cross Pin	17022
C-23320	Firing Pin Head (Blk. B-27975)	23320
A-17029	Main Spring	17029
B-17013	Bolt Stop (Blk. B-90492)	17013
C-24475	Bolt Stop Pin	24475
B-15224	Bolt Stop Spring	15224
C-22035	Front Guard Screw (Blk. C-28810)	22035
C-16430	Magazine (Blk. C-91933)	16430
C-92218	Magazine Follower (Blk. 92769)	92218
A-15677	Magazine Spring	15677
A-26355	Rear Guard Screw (A-91908)	26355
B-17034	Receiver Plug Screw (4) (Blk. B-91913)	17034
C-24475	Sear Pin	24476
C-34590	STOCK ASSEMBLY	34591
A-91544	Recoil Pad	91544
C-25410	Recoil Pad Screw (2) (Blk. C-91916)	25410
A-15358	Front Swivel Screw	15358
A-15358	Rear Swivel Screw	15358
B-15651	Stock Reinforcing Screw	15651
E-34355	Stock (Check.Pat.D-91546)(Blk.19752)	34356
D-26345	TRIGGER ASSEMBLY	26345
C-15478	Bolt Stop Release (Blk. C-91917)	15478
B-92297	Safety Assembly	92297
C-92212	Safety	92212
C-14578	Safety Button	14578
B-23220	Safety Detent Ball	23222
B-15368	Safety Detent Spring	15368
B-17043	Safety Pivot Pin (Blk. B-91918)	17043
A-17044	Safety Washer	17044
C-15666	Sear Safety Cam (Blk. C-91919)	15666
A-17047	Sear Spring	17047
C-15280	Trigger (Blk. C-91912)	15280
B-17053	Trigger Screw, Front (Blk. B-91920)	17053

CONFIDENTIAL-SUBJECT TO PROTECTIVE ORDER
KINZER V. REMINGTON

Ilion Research Division

Date:
09/22/89
11/22/89

MODEL 700 RIFLE - "CLASSIC" FOR 1990
BOLT ACTION REPEATER CENTERFIRE
.25-06 REMINGTON

Sheet 3
of 3

(Dotted line (----)
indicates same part number

DWG. NO.	PART NAME	.25-06 REMINGTON PART NUMBERS
C-19461	Trigger Connector (Blk. C-91921) (Blk. C-91937)	19461
B-91128	Trigger Engagement Screw (Blk. B-91922)	91128
C-26655	TRIGGER HOUSING ASSEMBLY	26655
B-14632	Trigger Housing Rivet (4)	14632
B-14630	Trigger Housing Spacer, Front (Blk. B-91923)	14630
B-14631	Trigger Housing Spacer, Rear (Blk. B-91924)	14631
C-30780	Trigger Side Plate, Right (Blk. C-32785)	30780
C-30780	Trigger Side Plate, Left	30781
C-24475	Trigger Pin	24477
A-15400	Trigger Spring	15400
A-15481	Trigger Stop Screw (Blk. A-91926)	15481
B-26370	TRIGGER GUARD ASSEMBLY	26371
	THE ABOVE PART NUMBER IS FOR ARMS SERVICE ONLY	
B-31490	Trigger Guard Sub-Assembly	31491
C-19800	Floor Plate (Blk. 91942)	19800
A-16453	Floor Plate Pivot Pin	16453
D-26375	Trigger Guard (Blk. 34315)	26376
B-15291	Floor Plate Latch (Blk. 91759)	15291
A-16451	Floor Plate Latch Pin (Blk. 91943)	16451
A-16452	Floor Plate Latch Spring	16452

CONFIDENTIAL-SUBJECT TO PROTECTIVE ORDER
KINZER V. REMINGTON

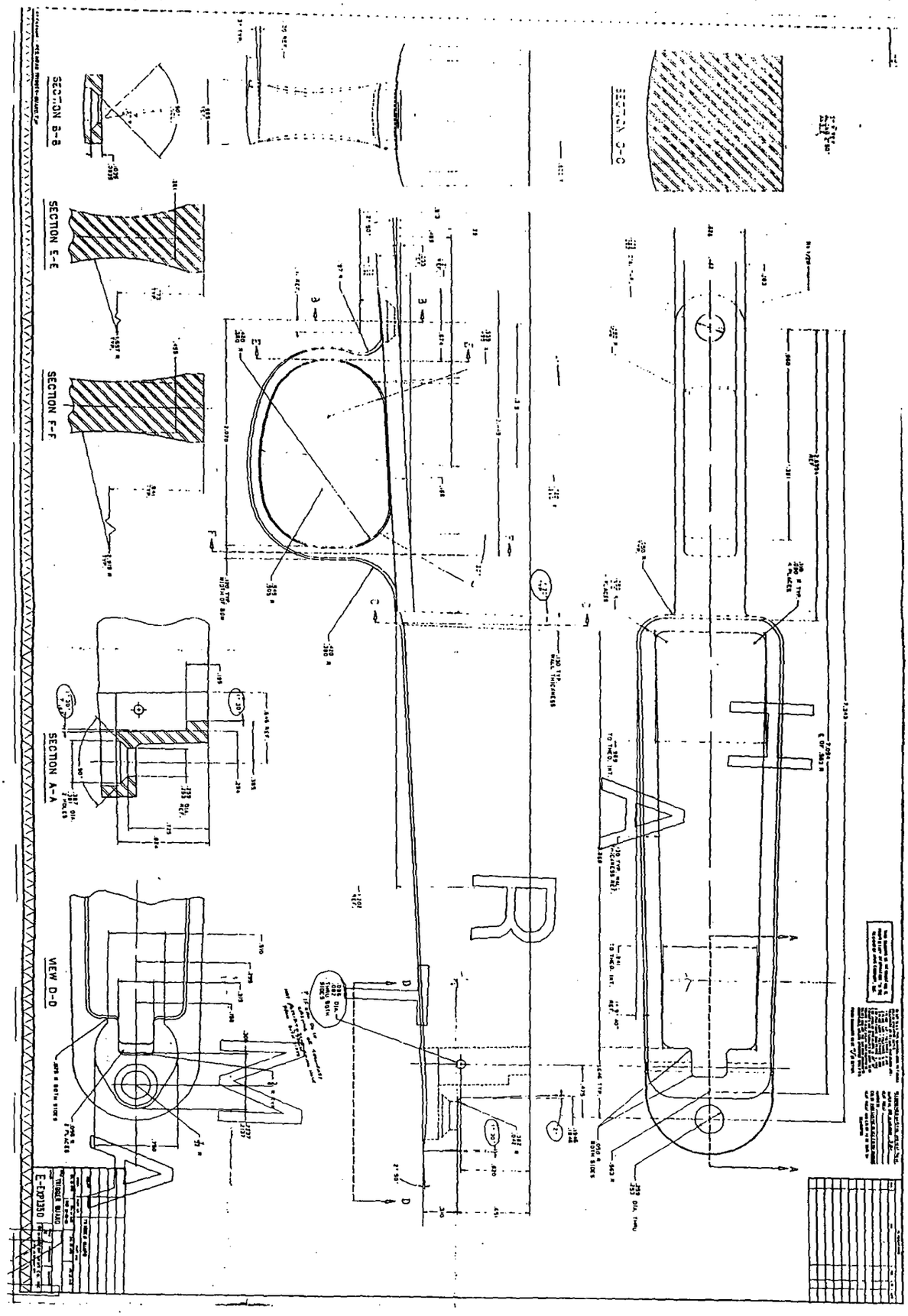

CONFIDENTIAL-SUBJECT TO PROTECTIVE ORDER
KINZER V. REMINGTON

CONFIDENTIAL-SUBJECT TO PROTECTIVE ORDER
KINZER V. REMINGTON

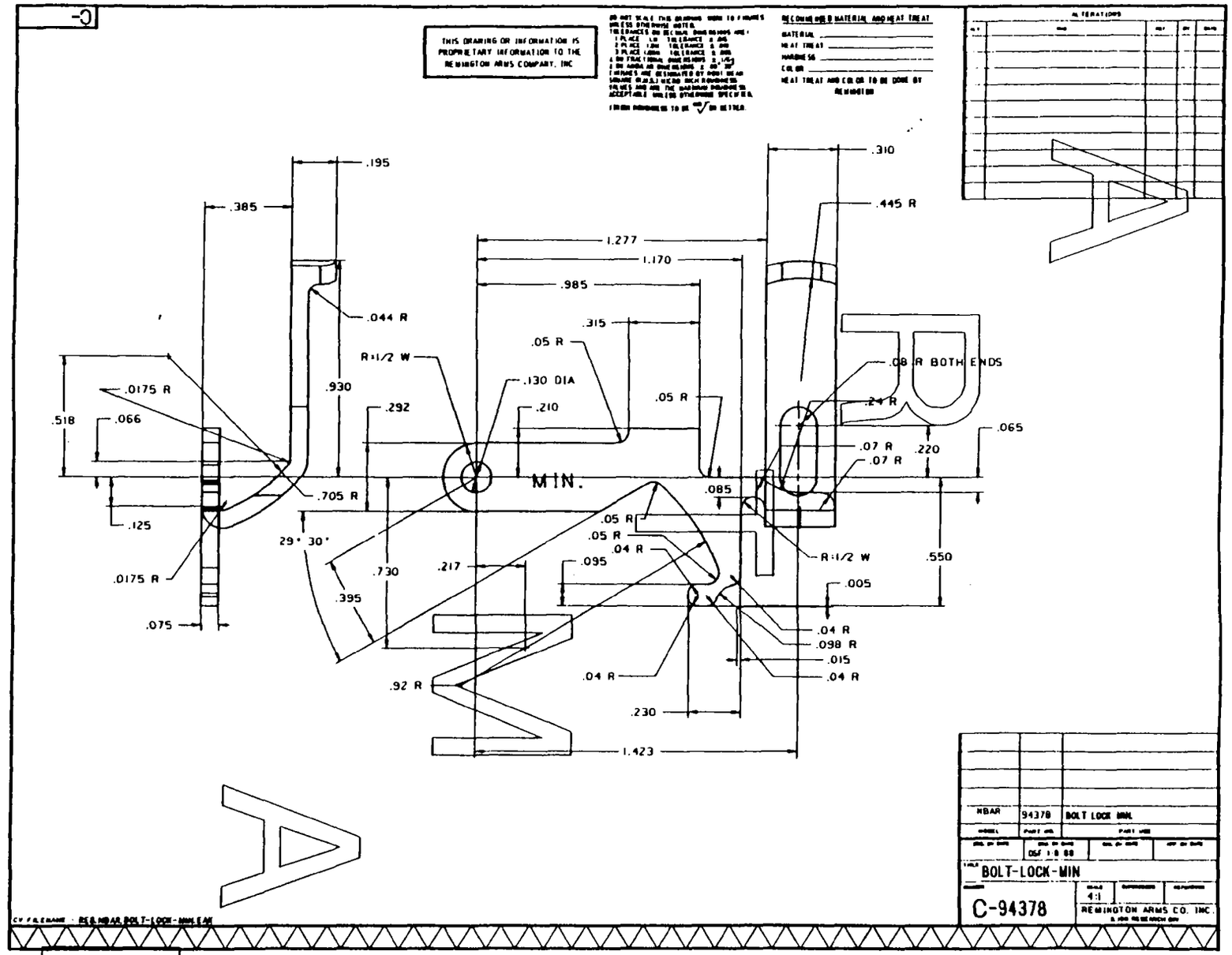

R2539808

CONFIDENTIAL-SUBJECT TO PROTECTIVE ORDER
KINZER V. REMINGTON

C-93639

THIS DRAWING OR INFORMATION IS PROPRIETARY INFORMATION TO THE REMINGTON ARMS COMPANY, INC

NOTES:

1. PIECE MUST BE FLAT AND FREE FROM BURRS. ENTIRE SURFACE OF PART MUST PASS THROUGH .091 SLOT.
2. FOR BLANK DRAWING SEE B-90492

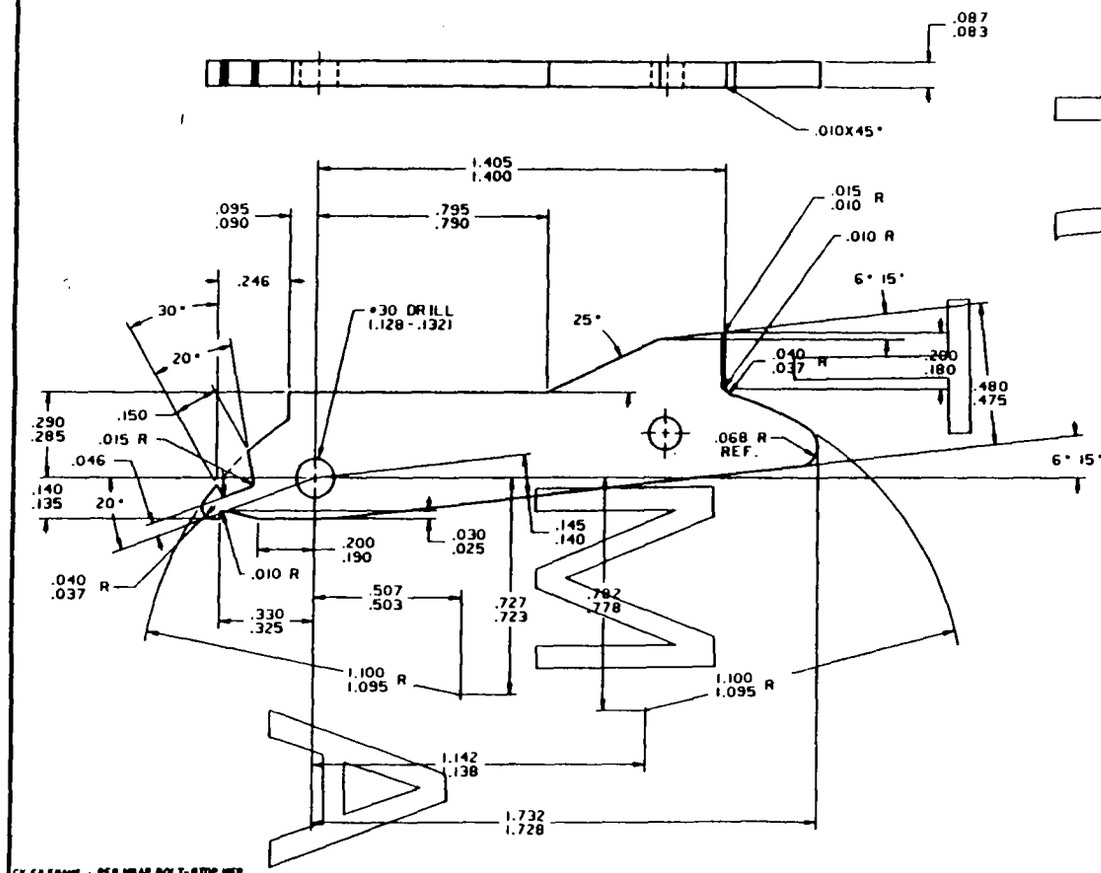

RECOMMENDED MATERIAL AND HEAT TREAT

MATERIAL C 1025
HEAT TREAT RS
HARDNESS RC 37-42
COLOR BLUING BLACK
HEAT TREAT AND COLOR TO BE DONE BY REMINGTON

NBAR	93639	BOLT STOP
MODEL	PART NO.	PART NOS

MFP 3-4 88

TITLE BOLT STOP

C-93639

SCALE 4/1

REMINGTON ARMS CO. INC.

R2539809

R2539810

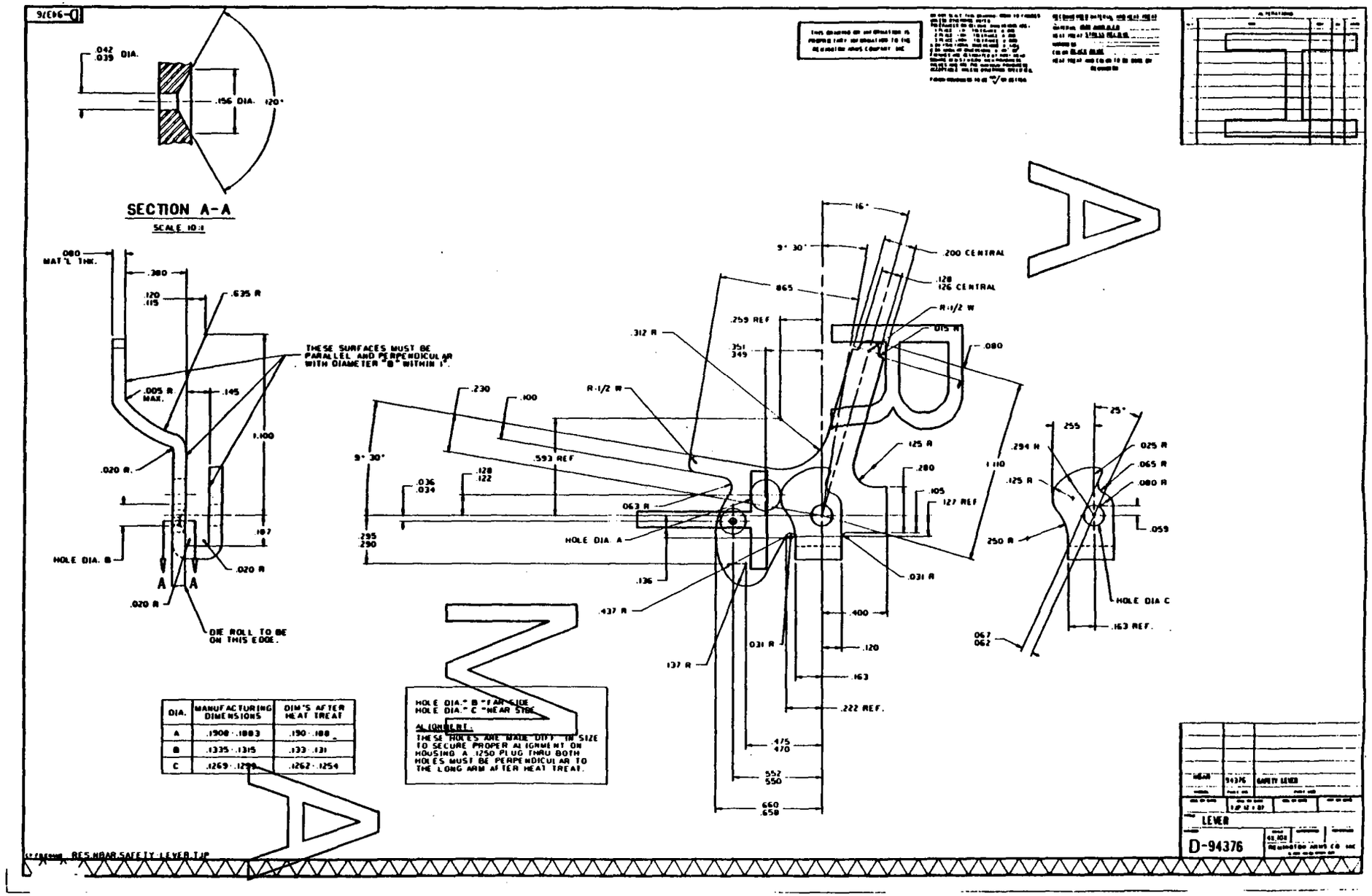

DIA.	MANUFACTURING DIMENSIONS	DIM'S AFTER HEAT TREAT
A	.1908 - .1883	.190 - .188
B	.1335 - .1315	.133 - .131
C	.1269 - .1259	.1262 - .1254

CONFIDENTIAL-SUBJECT TO PROTECTIVE ORDER
KINZER V. REMINGTON

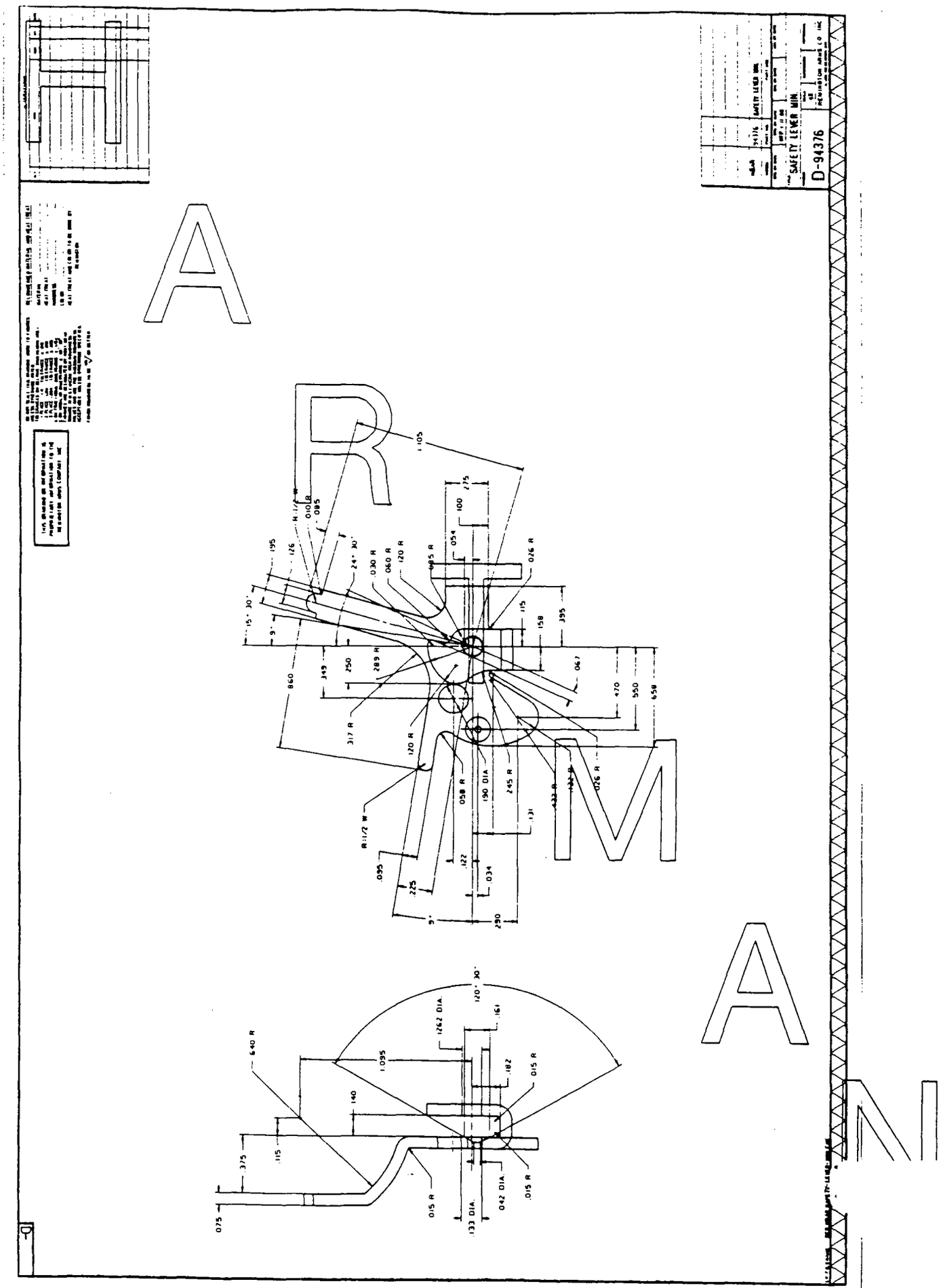
SAFETY LEVER MIN.
D-94376
REMINGTON ARMS CO. INC.
A
R
M
A
N

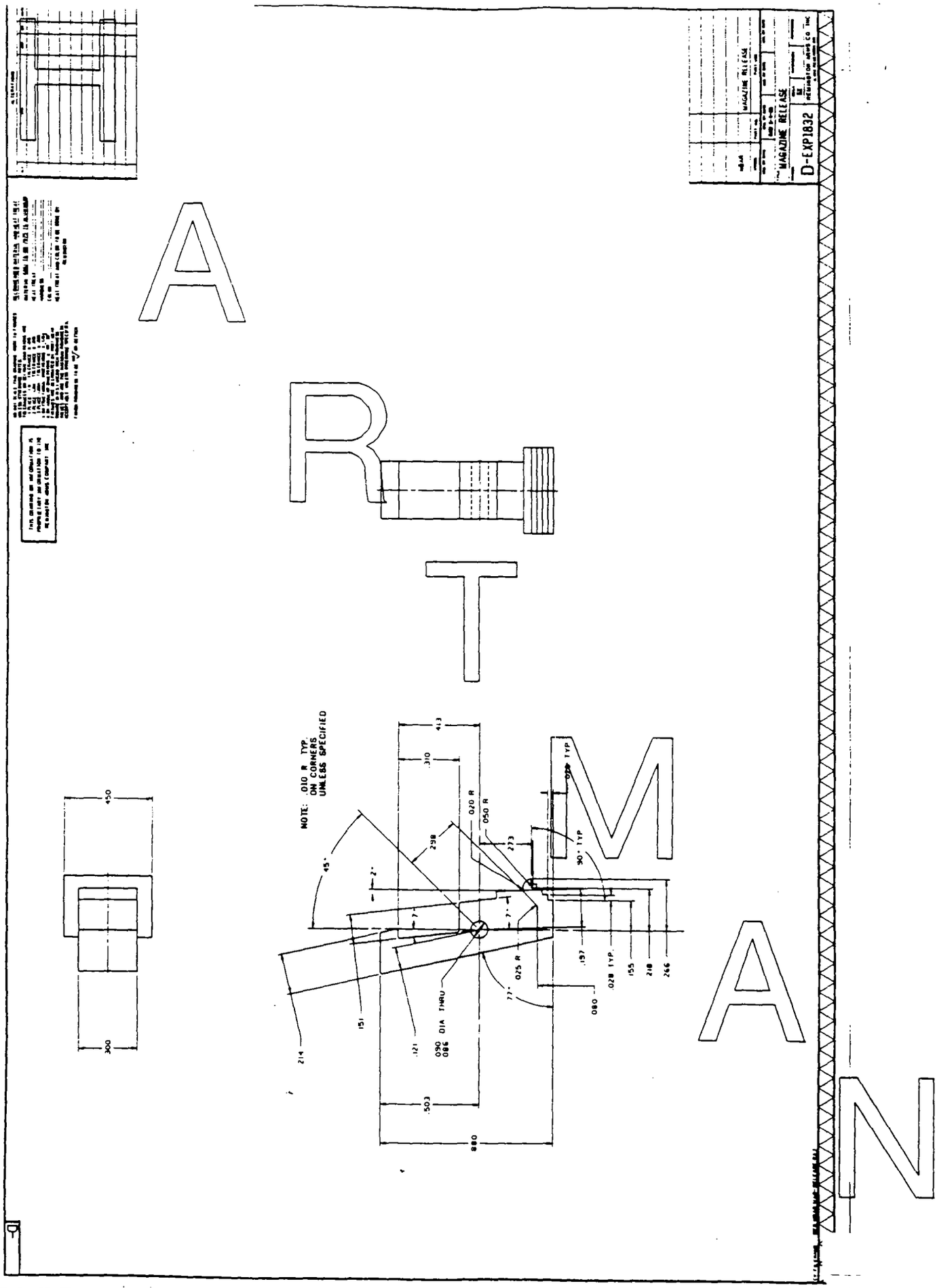
MAGAZINE RELEASE
D-EXP1832
NOTE: .010 R TYP.
ON CORNERS
UNLESS SPECIFIED
.020 R
.050 R
.025 R
.090 DIA THRU
.086
.880
.503
.310
.413
.298
.273
.157
.155
.218
.266
.080
.028 TYP.
.020 TYP
90° TYP
45°
77°
.151
.121
.214
.450
.300

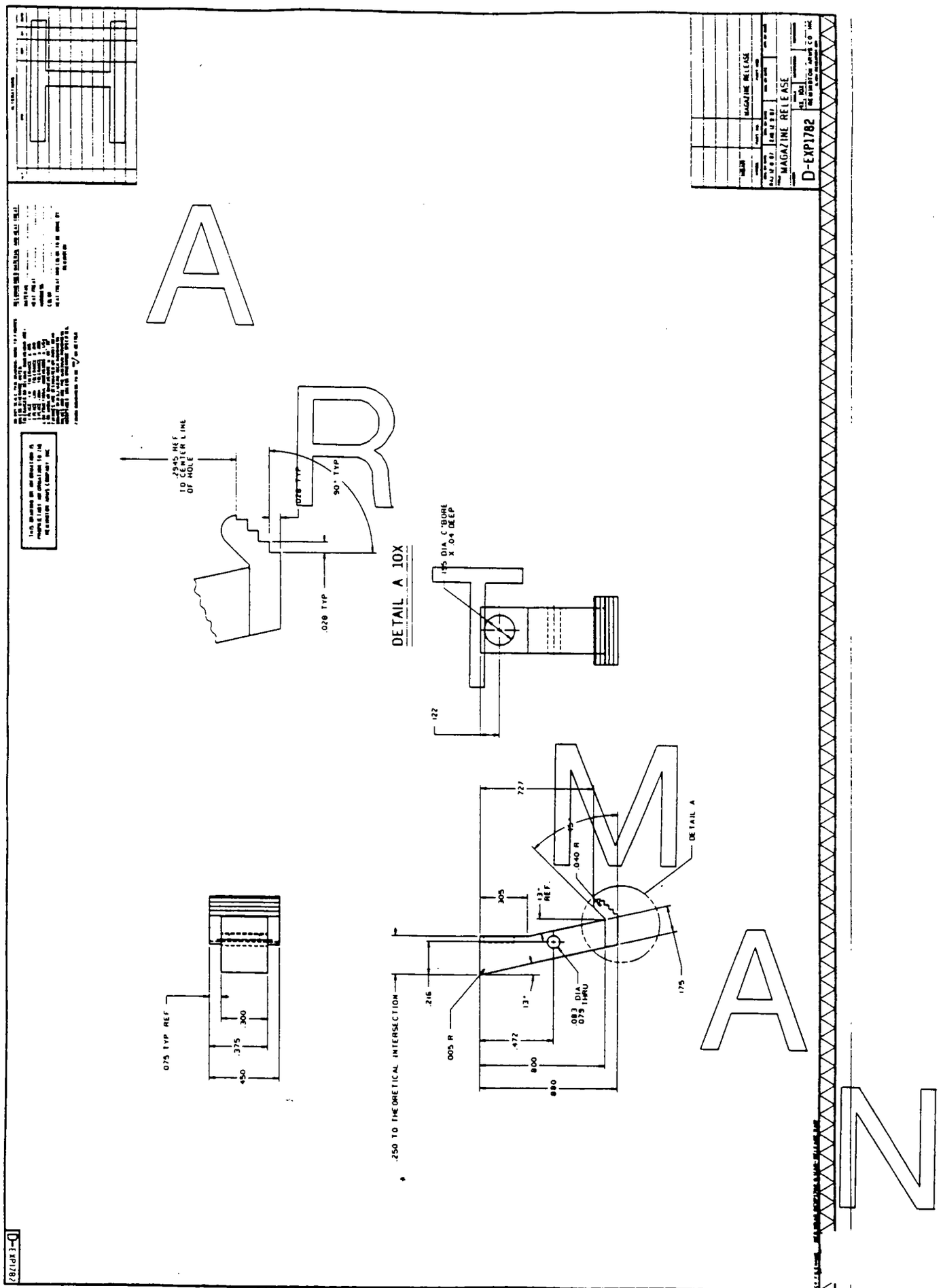
D-EXP1782
MAGAZINE RELEASE
DETAIL A 10X
.2945 REF TO CENTER LINE OF HOLE
.028 TYP
90° TYP
.135 DIA C'BORE X .04 DEEP
.122
.075 TYP REF
.300
.375
.450
.250 TO THEORETICAL INTERSECTION
.216
.305
.727
.040 R
13° REF.
13°
.083 DIA .073 THRU
.005 R
.472
.800
.880
.175
DETAIL A

CONFIDENTIAL-SUBJECT TO PROTECTIVE ORDER
KINZER V. REMINGTON

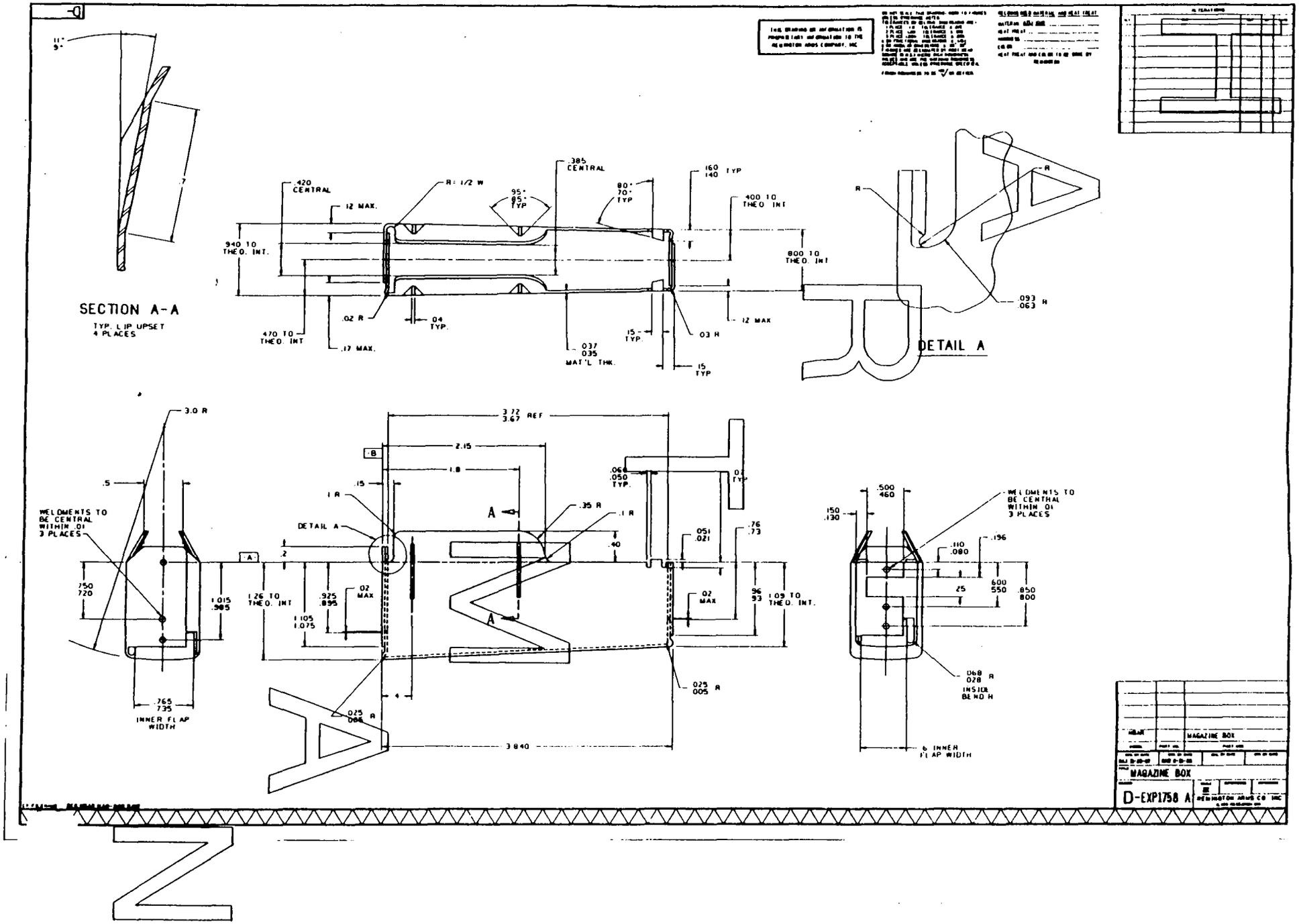

R2539814

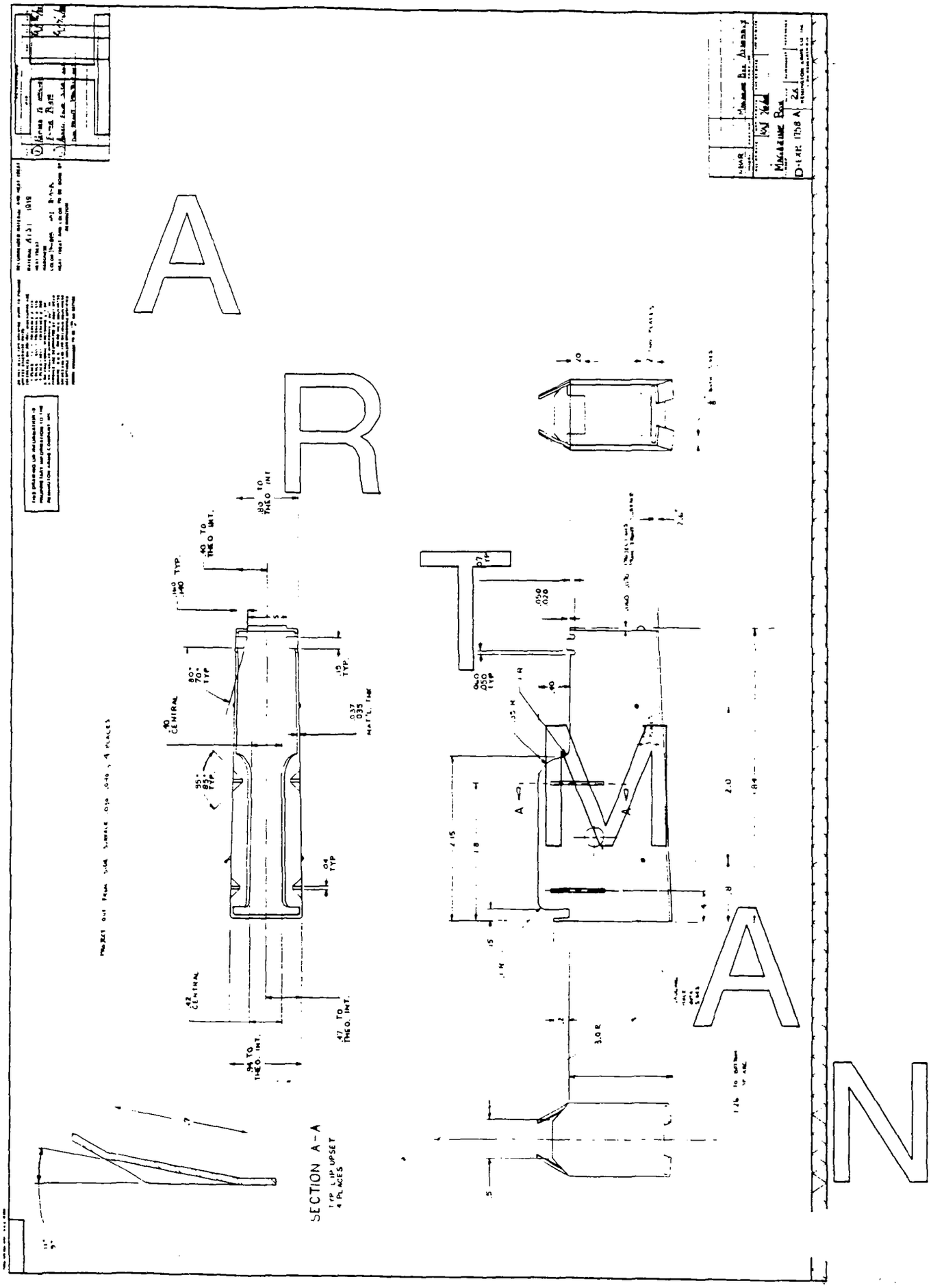

CONFIDENTIAL-SUBJECT TO PROTECTIVE ORDER
KINZER V. REMINGTON

CONFIDENTIAL-SUBJECT TO PROTECTIVE ORDER
KINZER V. REMINGTON

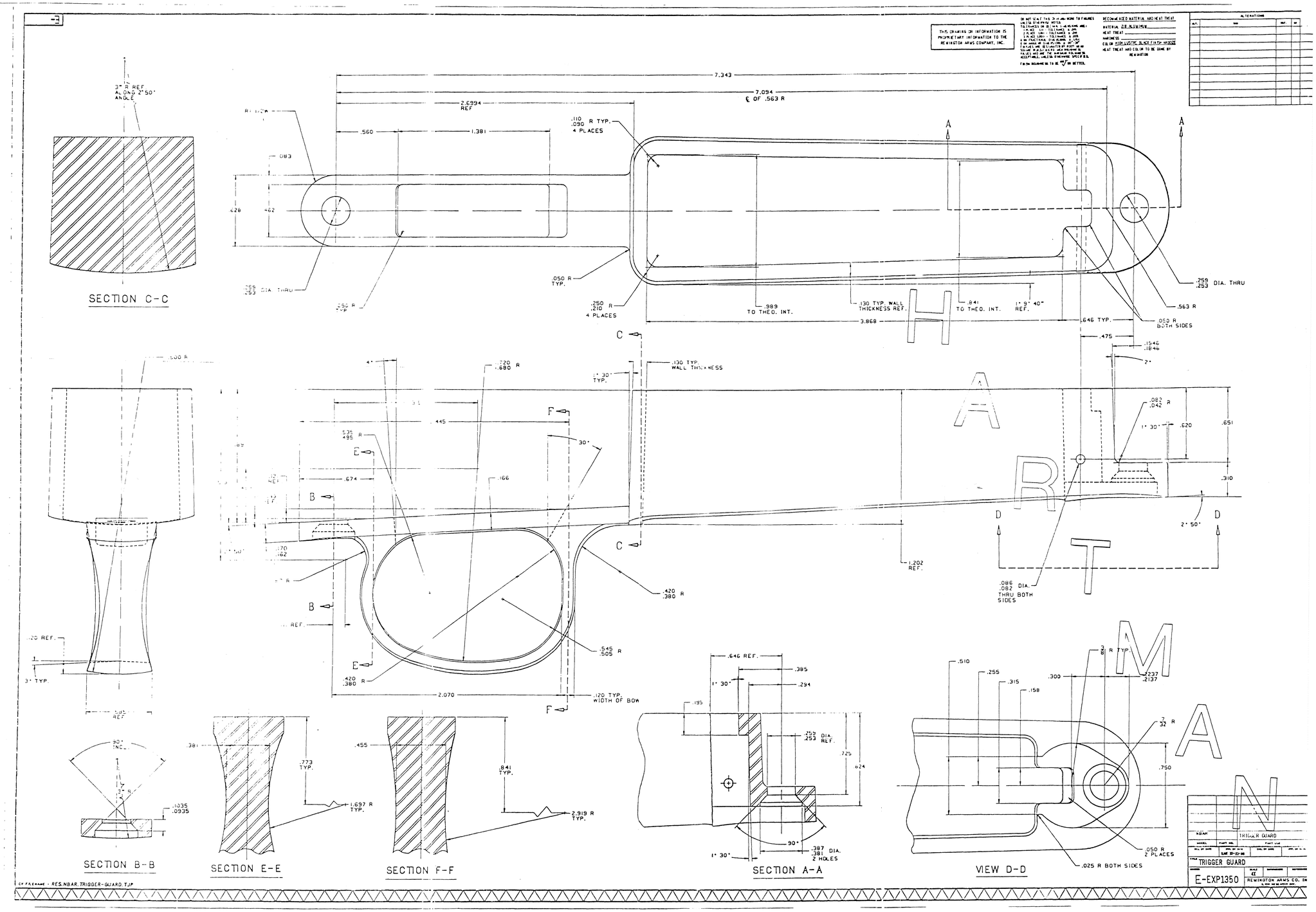

R2539816

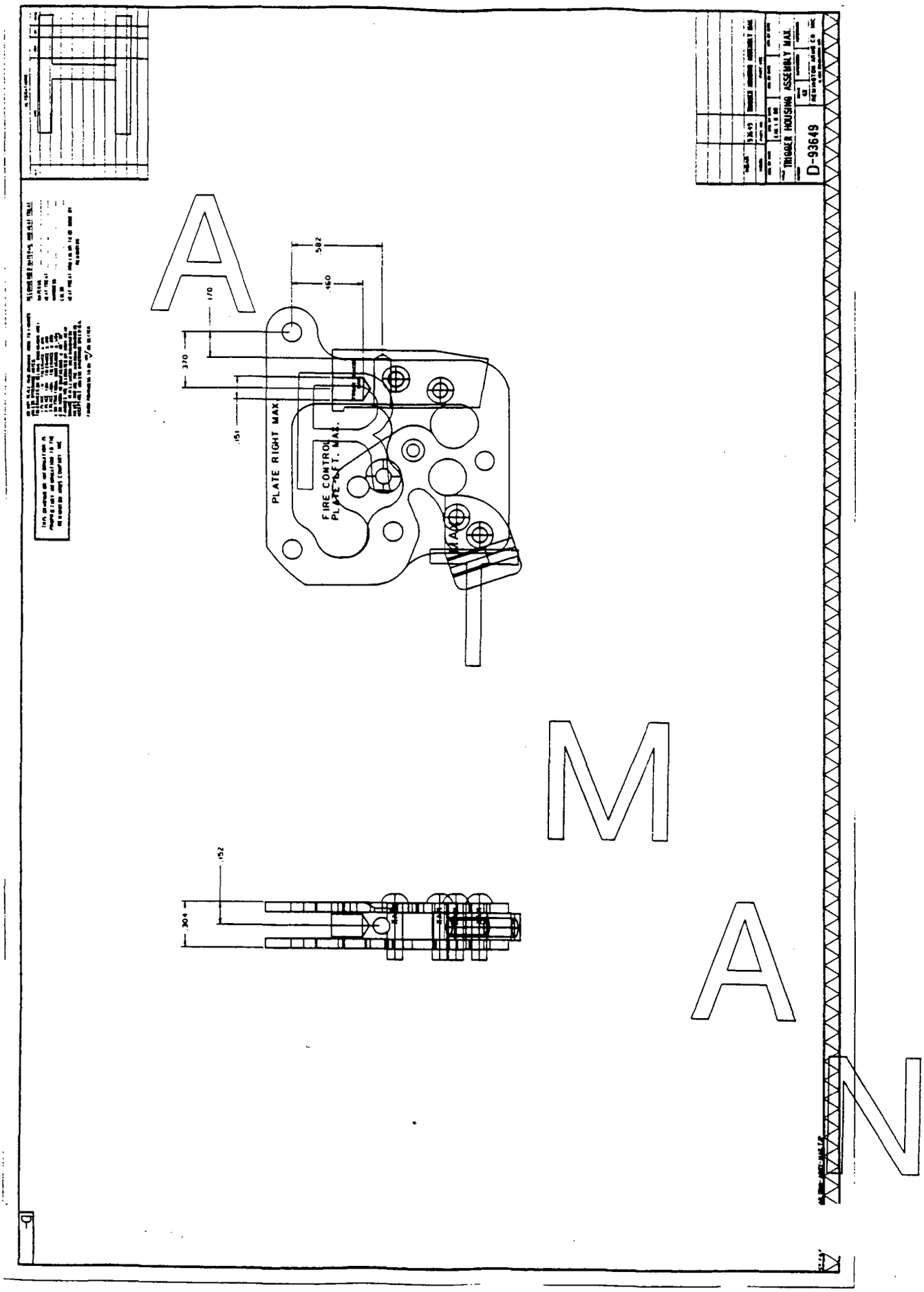
TRIGGER HOUSING ASSEMBLY MAX.
D-93649
PLATE RIGHT MAX
FIRE CONTROL PLATE LFT. MAX.
.582
.460
.170
.370
.151
.152
.304
A
M
A
N

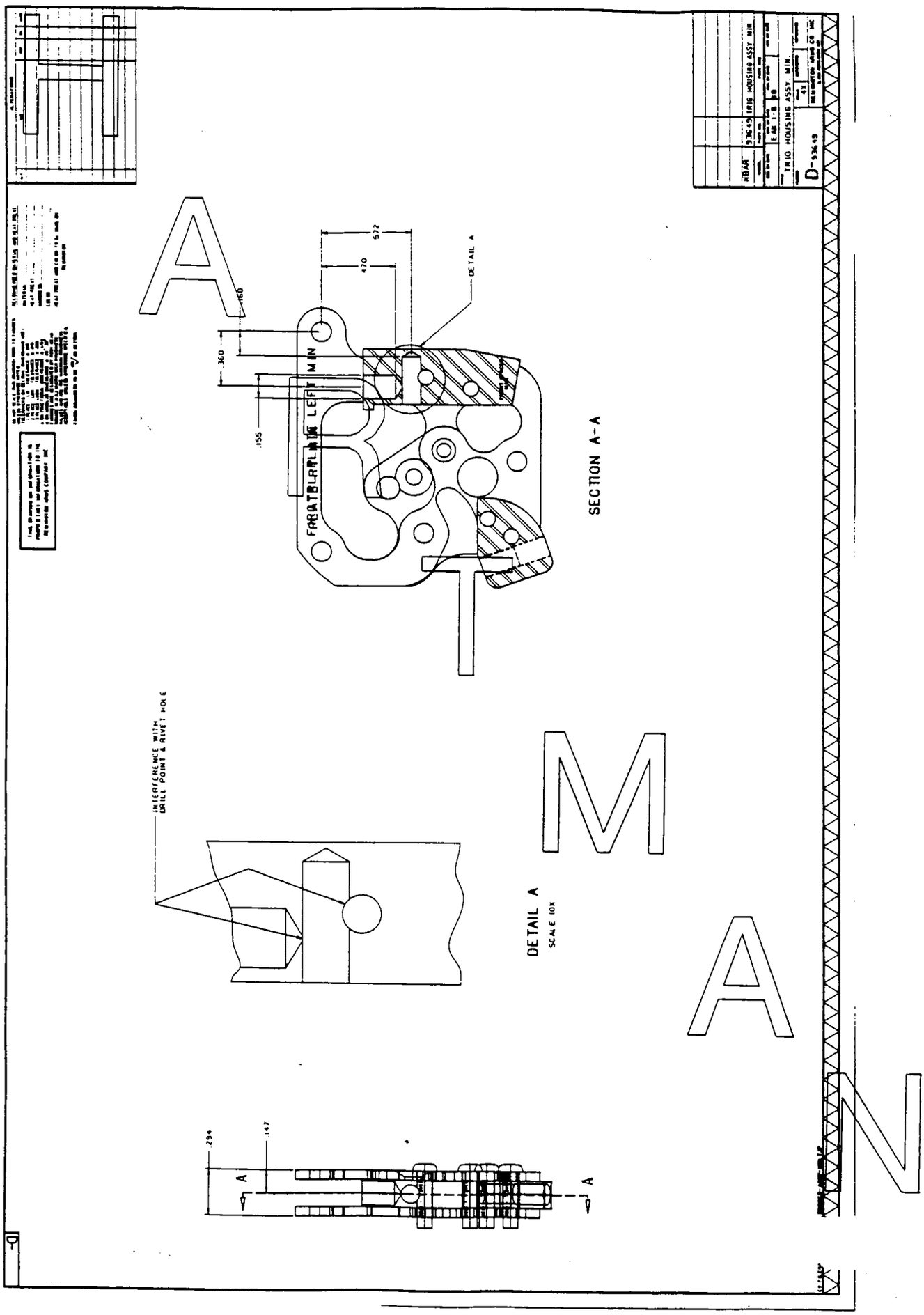
SECTION A-A
DETAIL A
SCALE 10X
INTERFERENCE WITH DRILL POINT & RIVET HOLE
FABRICATING LEFT MIN
TRIG HOUSING ASSY MIN
D-93649
A
M
A
N

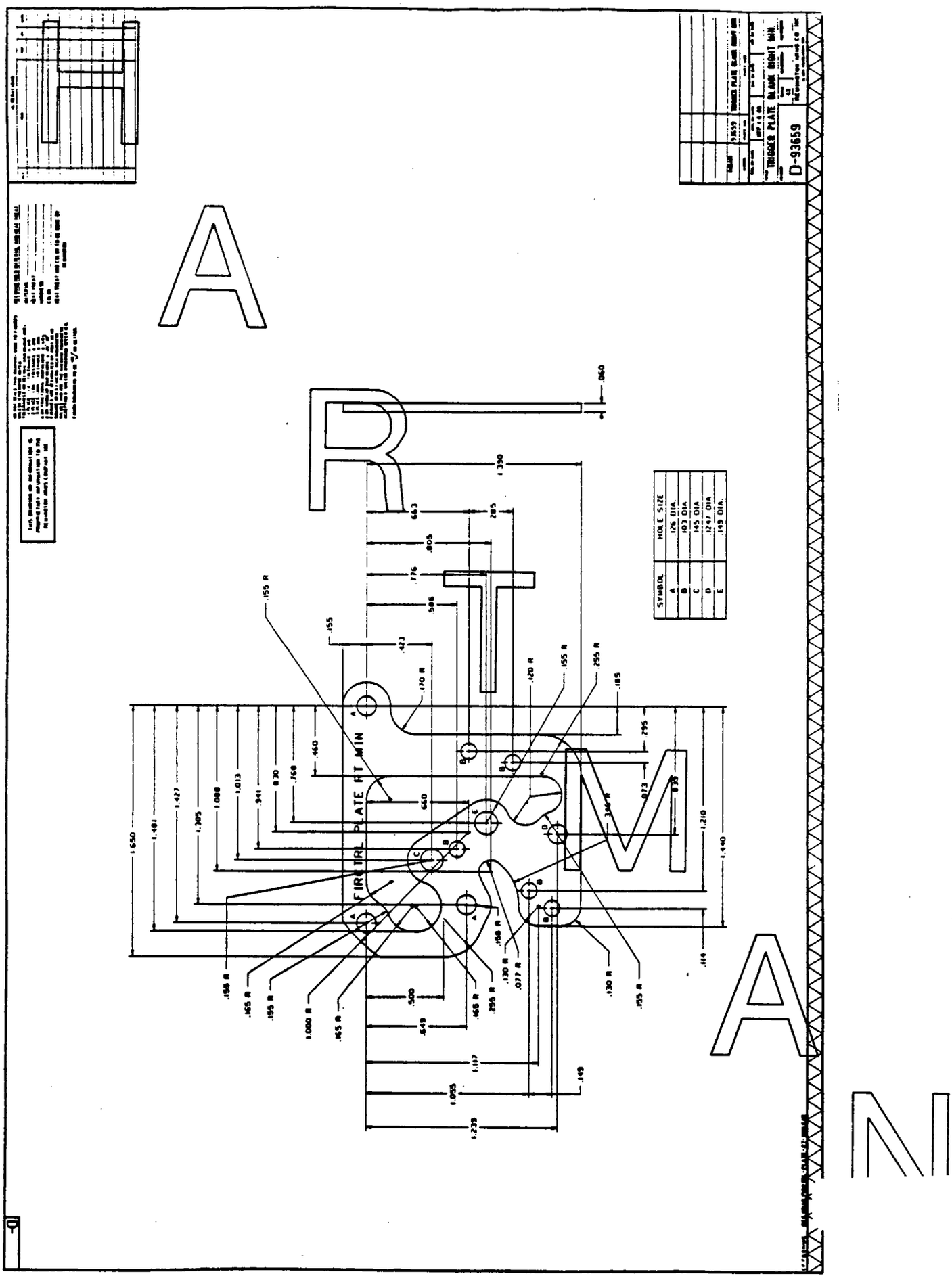
TRIGGER PLATE BLANK RIGHT MAIN
D-93659
FIRE CTRL PLATE RT MIN
SYMBOL
HOLE SIZE
A .126 DIA.
B .103 DIA.
C .145 DIA.
D .1247 DIA.
E .149 DIA.

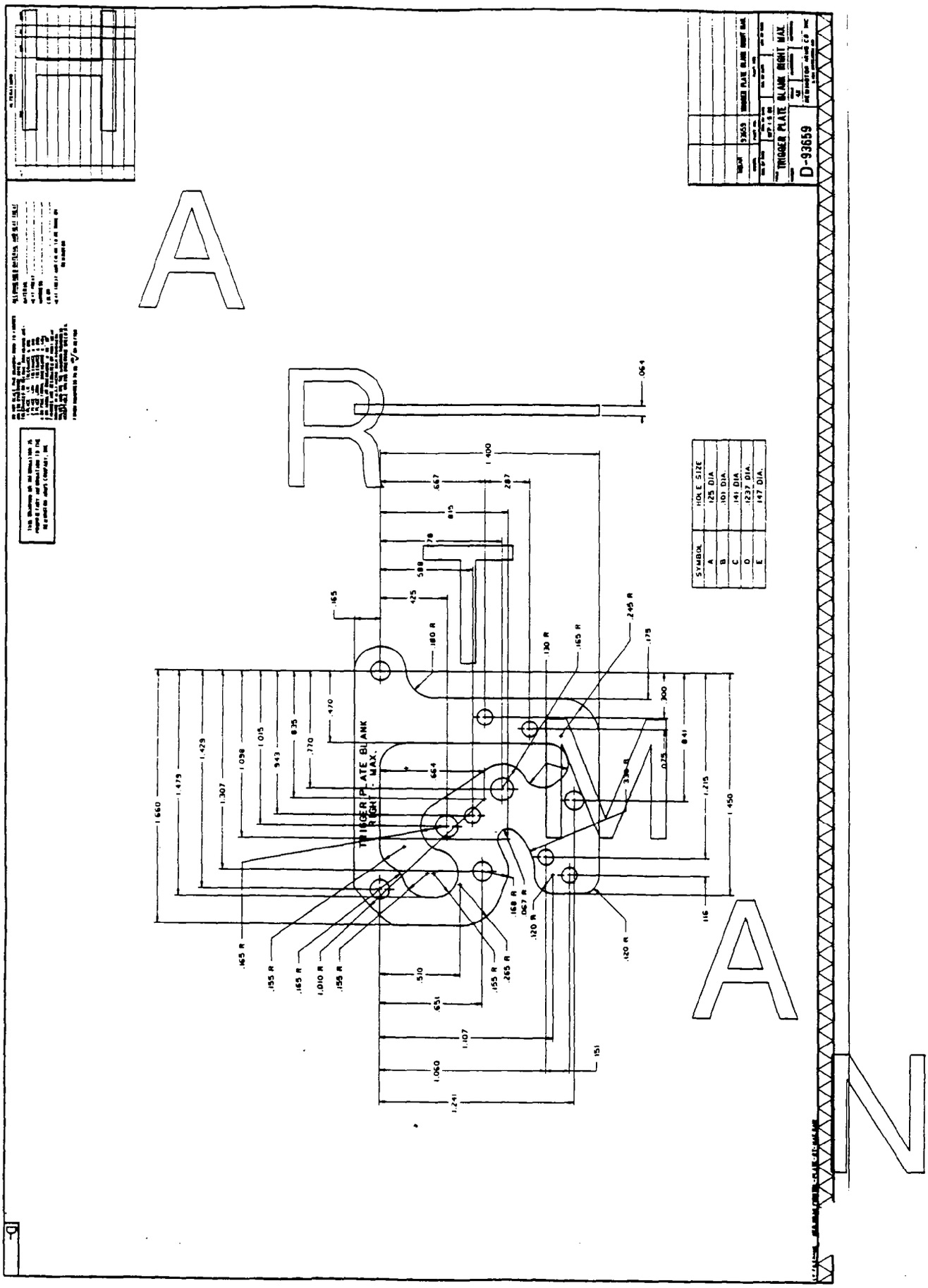

CONFIDENTIAL-SUBJECT TO PROTECTIVE ORDER
KINZER V. REMINGTON

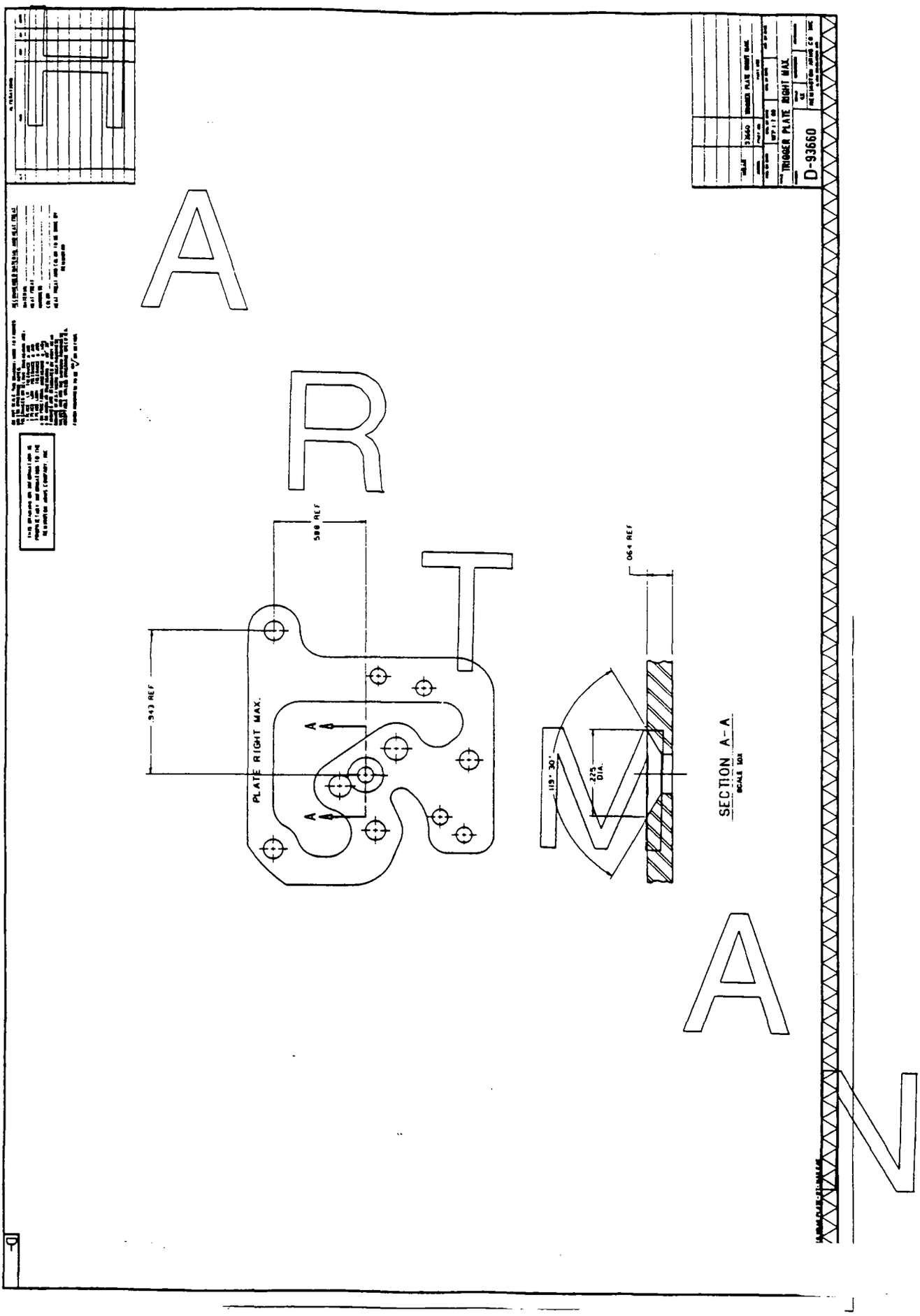
D-93660
TRIGGER PLATE RIGHT MAX.
PLATE RIGHT MAX.
.500 REF
.343 REF
.064 REF
.225 DIA.
119° 30'
SECTION A-A
SCALE 10X
A
R
T
A
N

CONFIDENTIAL-SUBJECT TO PROTECTIVE ORDER
KINZER V. REMINGTON

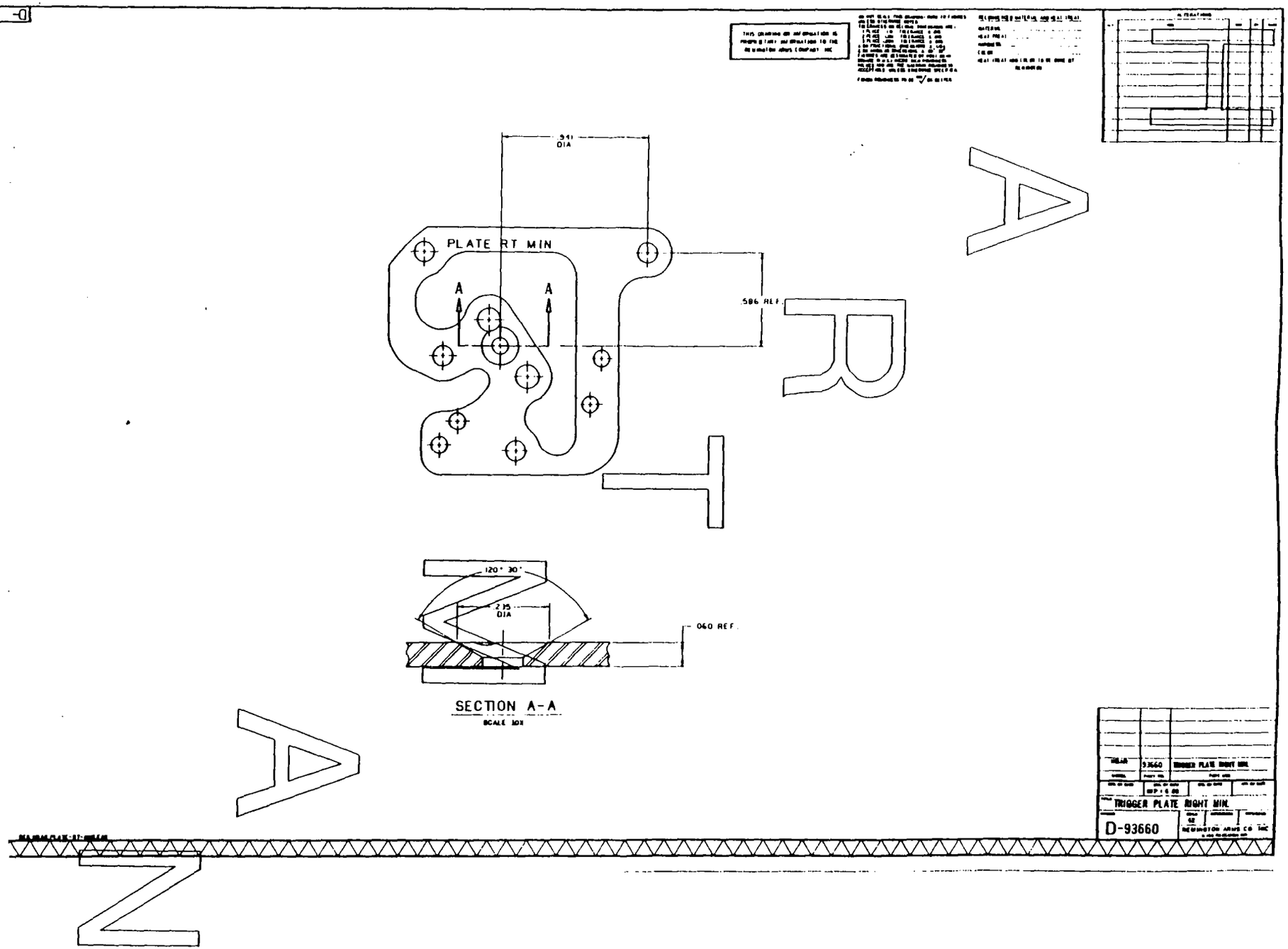

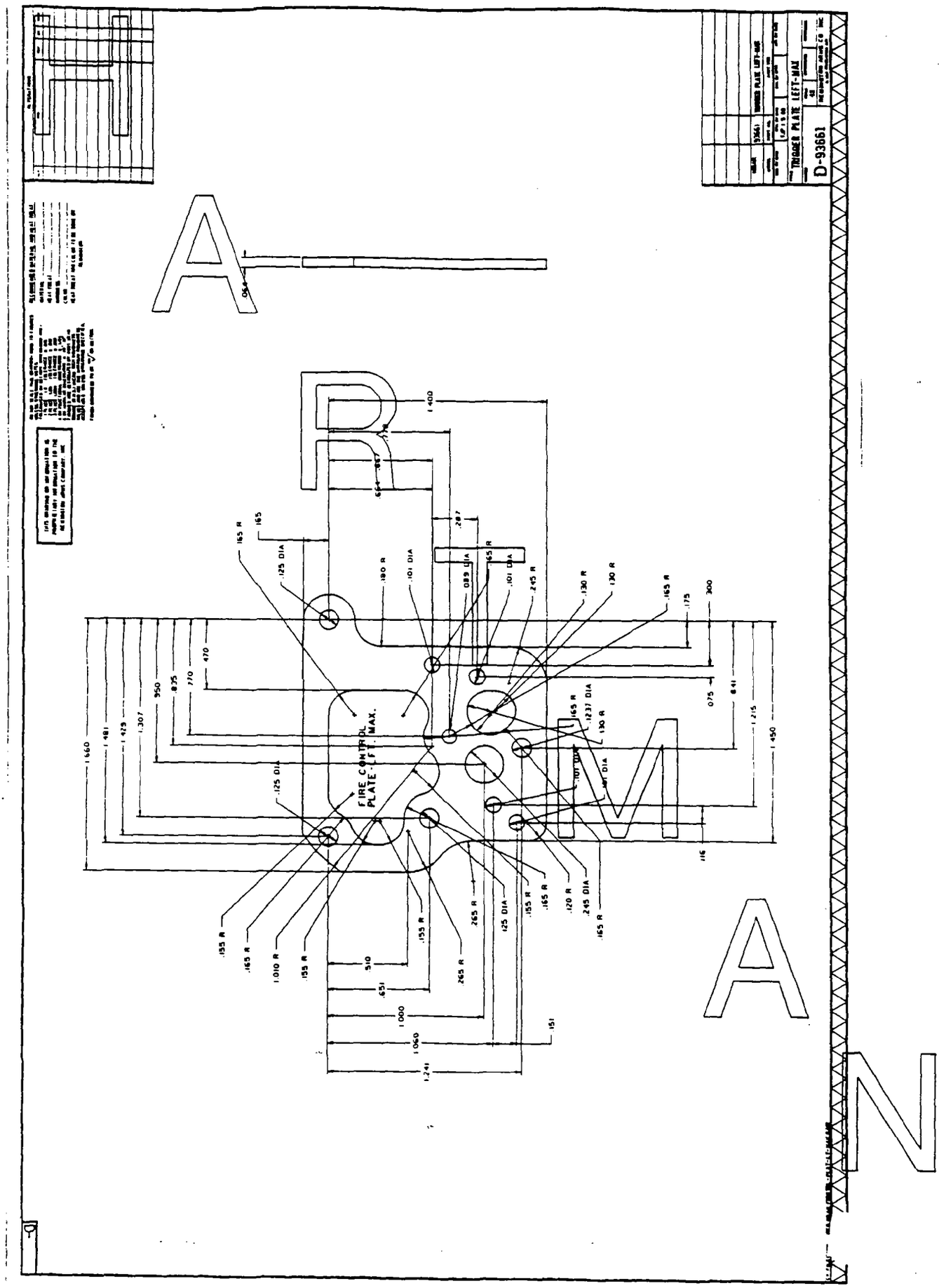
FIRE CONTROL
PLATE LFT. MAX.
TRIGGER PLATE LEFT-MAX
D-93661

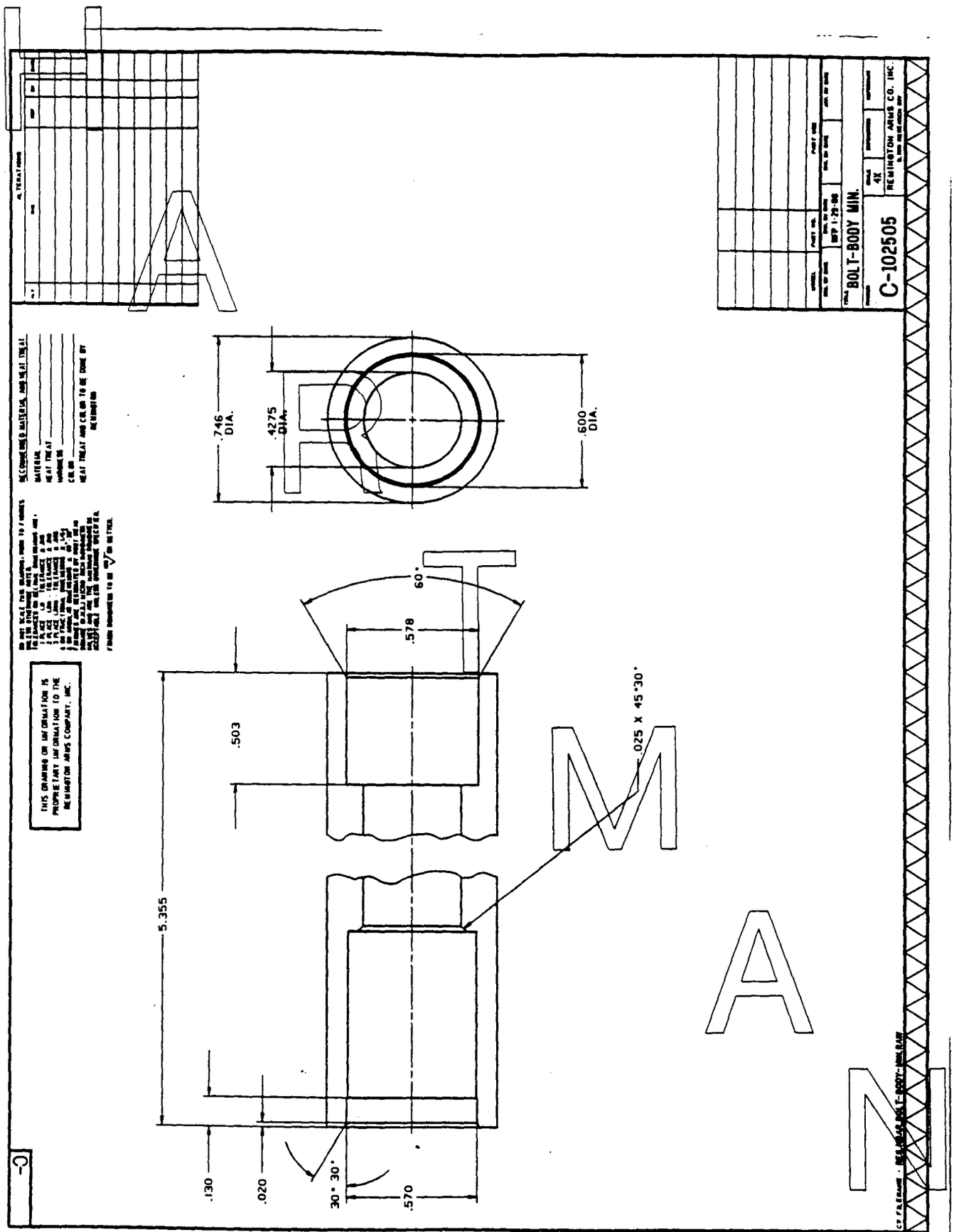
.746 DIA.
.4275 DIA.
.600 DIA.
60°
.578
.503
.025 X 45°30'
5.355
.130
.020
30° 30'
.570
THIS DRAWING OR INFORMATION IS PROPRIETARY INFORMATION TO THE REMINGTON ARMS COMPANY, INC.
BOLT-BODY MIN.
C-102505
REMINGTON ARMS CO. INC.

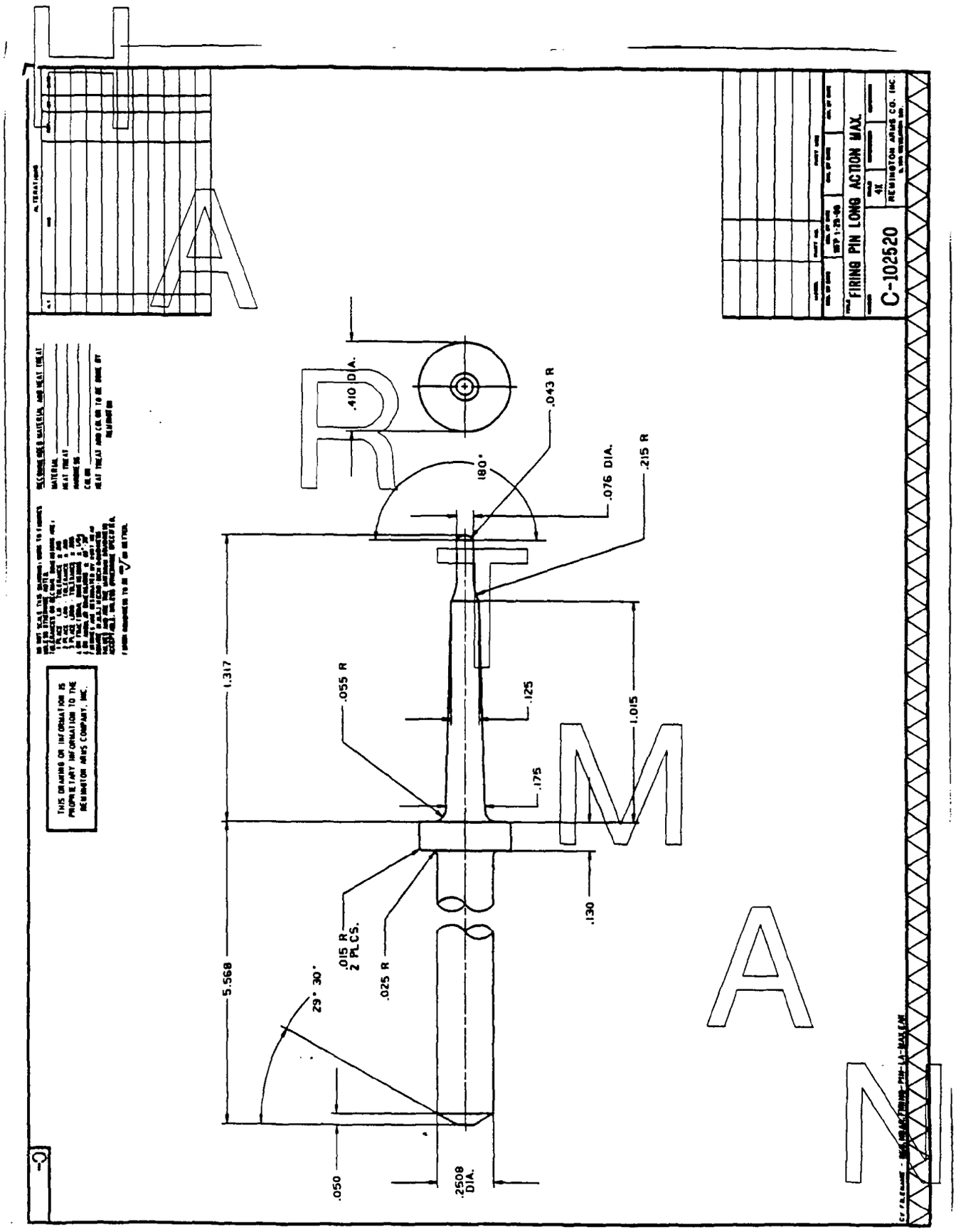
FIRING PIN LONG ACTION MAX.
C-102520
REMINGTON ARMS CO. INC.
.410 DIA.
.043 R
180°
.076 DIA.
.215 R
1.317
.055 R
.125
1.015
.175
.130
.015 R
2 PLCS.
.025 R
29° 30'
5.568
.050
.2508
DIA.

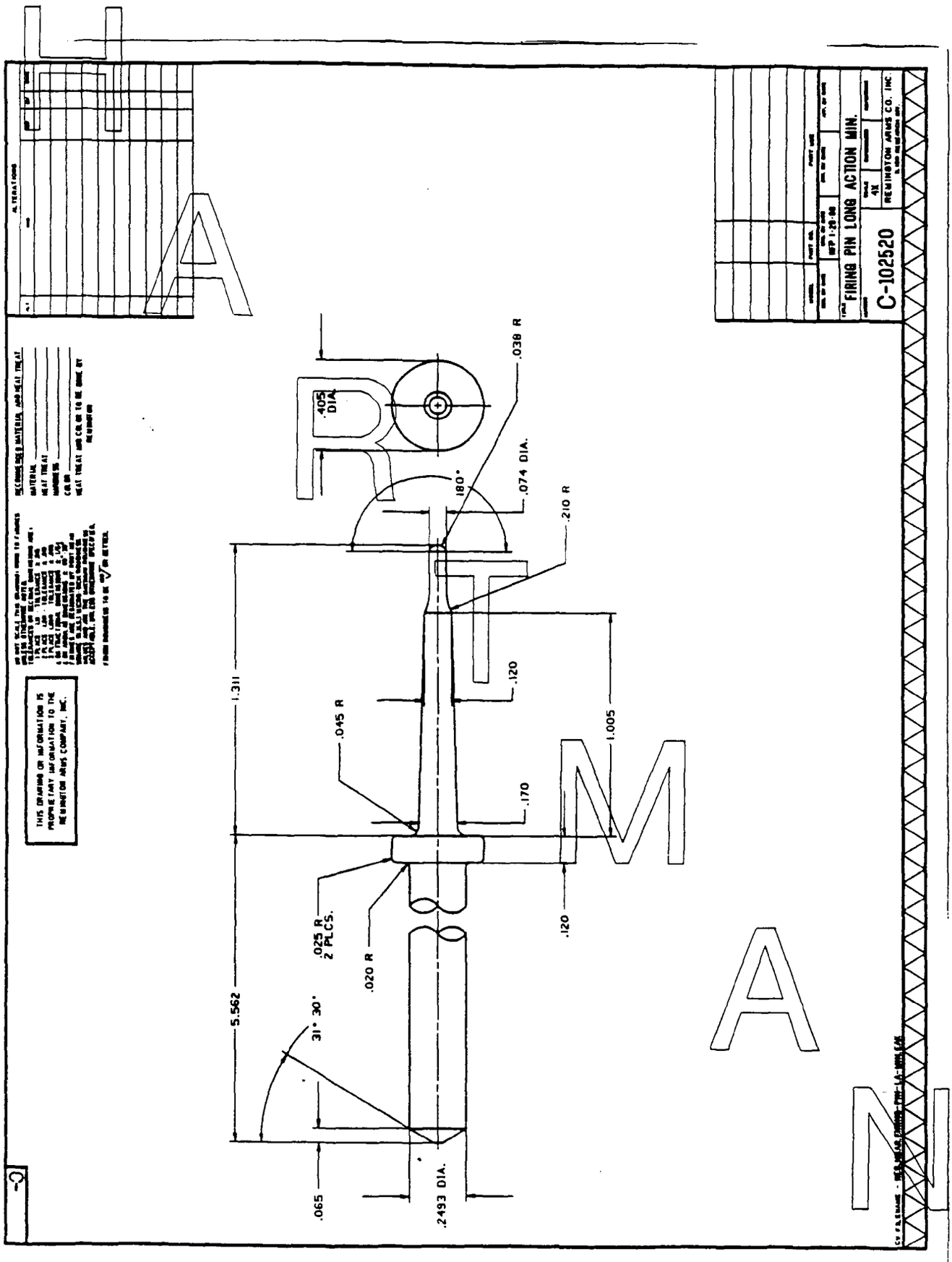
FIRING PIN LONG ACTION MIN.
C-102520
REMINGTON ARMS CO. INC.
.038 R
.405 DIA.
.074 DIA.
180°
.210 R
1.311
.120
.045 R
1.005
.170
.025 R
2 PLCS.
.020 R
.120
5.562
31° 30'
.065
.2493 DIA.

CONFIDENTIAL-SUBJECT TO PROTECTIVE ORDER
KINZER V. REMINGTON

THIS DRAWING OR INFORMATION IS PROPRIETARY INFORMATION TO THE REMINGTON ARMS COMPANY, INC.

RECOMMENDED MATERIAL AND HEAT TREAT

MATERIAL
HEAT TREAT
HARDNESS
COLOR
HEAT TREAT AND COLOR TO BE DONE BY REMINGTON

ALTERATIONS

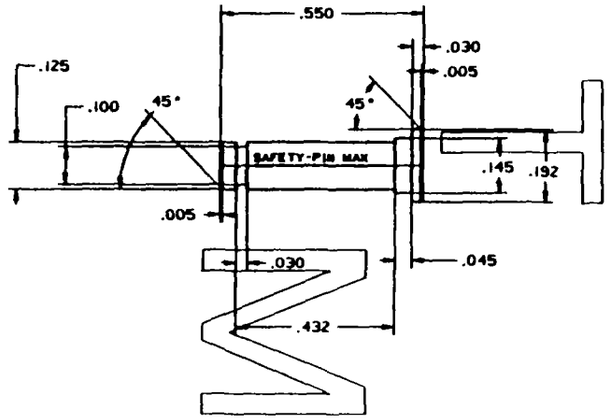

MBAR	17043	SAFETY PIVOT PIN-MAX
T.J.P 1-4-88		
SAFETY PIVOT PIN-MAX		
C-17043	5X	REMINGTON ARMS CO. INC.

CV FILENAME: REMBAR SAFETY-PIN-MAX.EAN

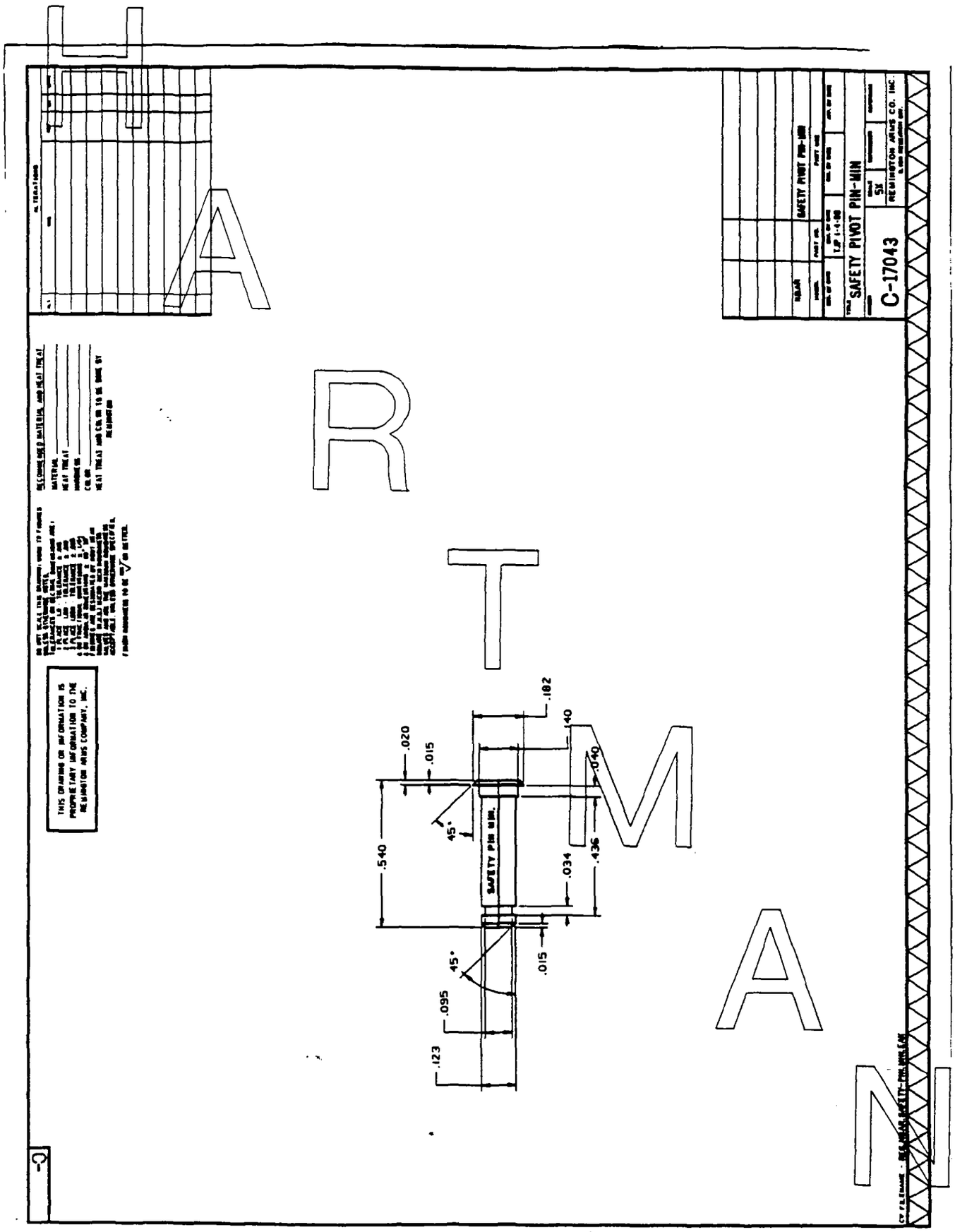

CONFIDENTIAL-SUBJECT TO PROTECTIVE ORDER
KINZER V. REMINGTON

CONFIDENTIAL-SUBJECT TO PROTECTIVE ORDER
KINZER V. REMINGTON

B-

THIS DRAWING OR INFORMATION IS PROPRIETARY INFORMATION TO THE REMINGTON ARMS COMPANY, INC.

DO NOT SCALE THIS DRAWING: WORK TO FIGURES UNLESS OTHERWISE NOTED.
TOLERANCES ON DECIMAL DIMENSIONS ARE:
1 PLACE 1.11 - TOLERANCE ± .015
2 PLACE 1.011 - TOLERANCE ± .010
3 PLACE 1.0011 - TOLERANCE ± .005
& ON FRACTIONAL DIMENSIONS ± 1/64
& ON ANGULAR DIMENSIONS ± 00° - 30'
FINISHES ARE DESIGNATED BY ROOT MEAN SQUARE (R.M.S.) MICRO-INCH ROUGHNESS VALUES AND ARE THE MAXIMUM ROUGHNESS ACCEPTABLE. UNLESS OTHERWISE SPECIFIED,

FINISH ROUGHNESS TO BE 125 OR BETTER.

RECOMMENDED MATERIAL AND HEAT TREAT

MATERIAL _____
HEAT TREAT _____
HARDNESS _____
COLOR _____

HEAT TREAT AND COLOR TO BE DONE BY REMINGTON

ALTERATIONS

ALT	DESC	REF.	BY	DATE

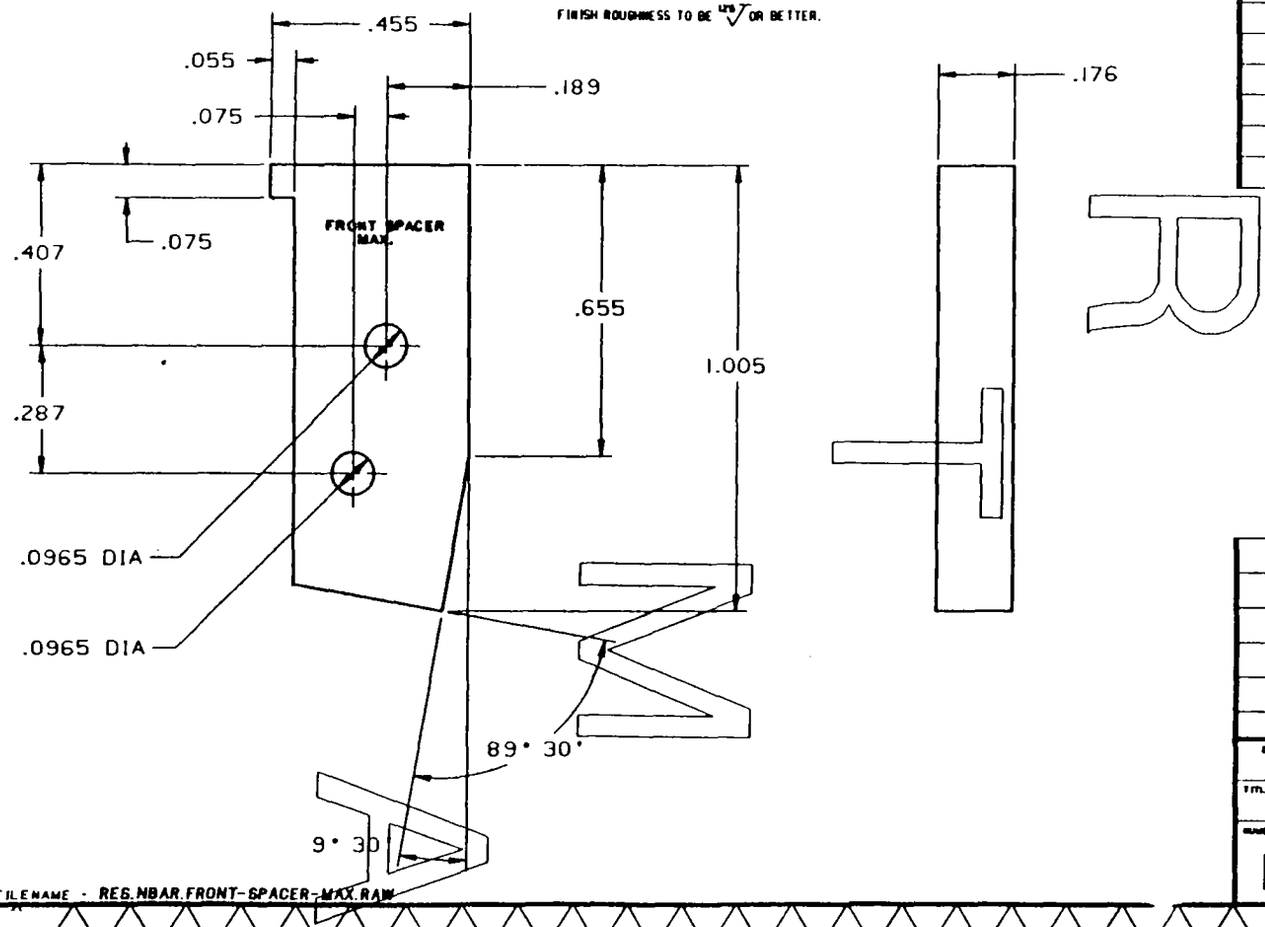

NBAR	93635	TRIGG. HOUSING FRONT SPACER-MAX
MODEL	PART NO.	PART USE

DES. BY DATE	DRN. BY DATE	CHK. BY DATE	APP. BY DATE
	TJP 1-5-88		

TITLE SPACER, FRONT-MAX

NUMBER	SCALE	SUPERSEDES	REFERENCE
B-93635	4X		

REMINGTON ARMS CO. INC.
ELDAN RESEARCH DIV

CV FILENAME - REG.NBAR.FRONT-SPACER-MAX.RAW

R2539829

CONFIDENTIAL-SUBJECT TO PROTECTIVE ORDER
KINZER V. REMINGTON

-B

THIS DRAWING OR INFORMATION IS PROPRIETARY INFORMATION TO THE REMINGTON ARMS COMPANY, INC.

DO NOT SCALE THIS DRAWING: WORK TO FIGURES UNLESS OTHERWISE NOTED.
TOLERANCES ON DECIMAL DIMENSIONS ARE:
1 PLACE 1.1 - TOLERANCE ± .015
2 PLACE 1.01 - TOLERANCE ± .010
3 PLACE 1.001 - TOLERANCE ± .005
& ON FRACTIONAL DIMENSIONS ± 1/64
& ON ANGULAR DIMENSIONS ± 00° 30'
FINISHES ARE DESIGNATED BY ROOT MEAN SQUARE (R.M.S.) MICRO-INCH ROUGHNESS VALUES AND ARE THE MAXIMUM ROUGHNESS ACCEPTABLE. UNLESS OTHERWISE SPECIFIED,

FINISH ROUGHNESS TO BE 125 √ OR BETTER.

RECOMMENDED MATERIAL AND HEAT TREAT

MATERIAL _____
HEAT TREAT _____
HARDNESS _____
COLOR _____

HEAT TREAT AND COLOR TO BE DONE BY REMINGTON

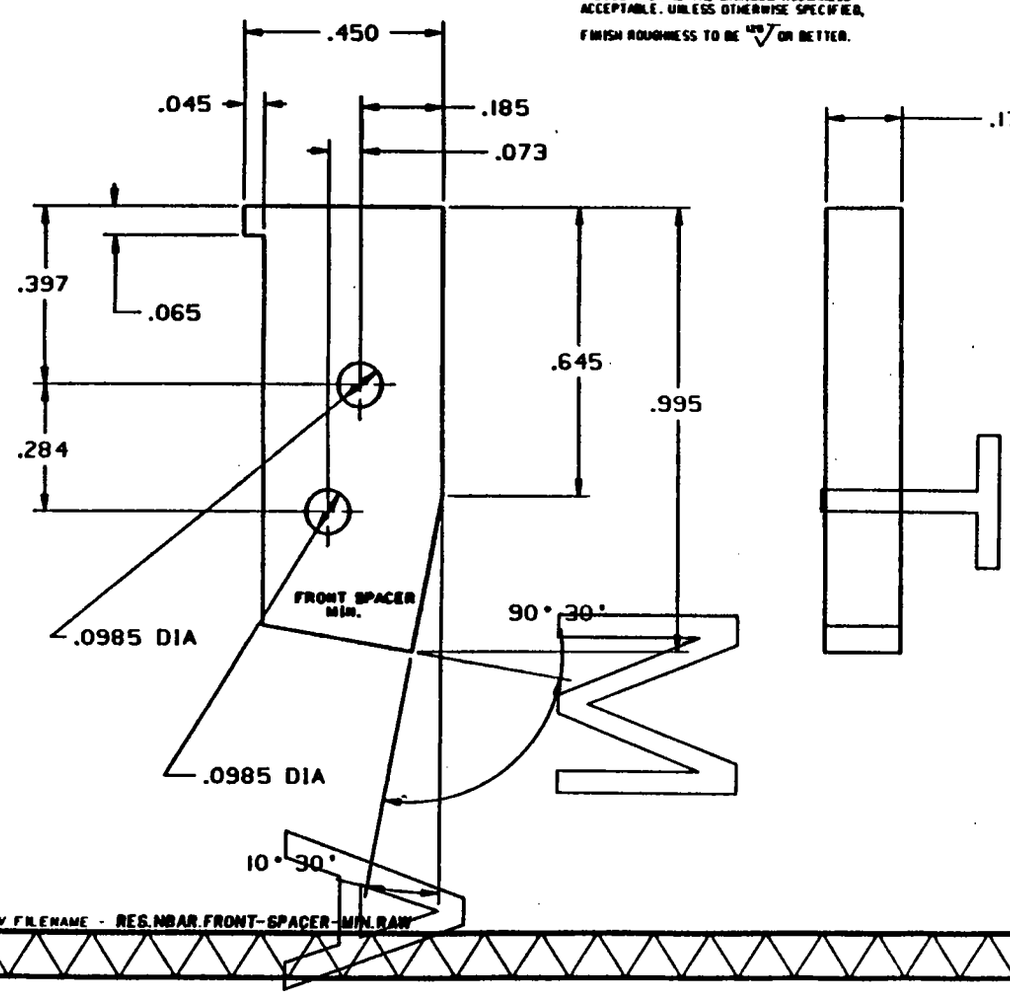

ALTERATIONS

ALT.	ENG	REF.	BY	DATE

NBAR	93635	TRIGG. HOUSING FRONT SPACER-MIN
MODEL	PART NO.	PART USE
DES. BY DATE	ENG. BY DATE TJP 1-5-88	CHK. BY DATE / APP. BY DATE

TITLE SPACER, FRONT-MIN

NUMBER B-93635 | SCALE 4X | SUPERSEDES | REFERENCE

REMINGTON ARMS CO. INC.
ELION RESEARCH DIV.

CV FILENAME - RES.NBAR.FRONT-SPACER-MIN.RAW

R2539830

CONFIDENTIAL-SUBJECT TO PROTECTIVE ORDER
KINZER V. REMINGTON

B-

THIS DRAWING OR INFORMATION IS PROPRIETARY INFORMATION TO THE REMINGTON ARMS COMPANY, INC.

DO NOT SCALE THIS DRAWING. WORK TO FIGURES UNLESS OTHERWISE NOTED.
TOLERANCES ON DECIMAL DIMENSIONS ARE:
1 PLACE (.1) - TOLERANCE ± .015
2 PLACE (.01) - TOLERANCE ± .010
3 PLACE (.001) - TOLERANCE ± .005
& ON FRACTIONAL DIMENSIONS ± 1/64
& ON ANGULAR DIMENSIONS ± 00°-30'
FINISHES ARE DESIGNATED BY ROOT MEAN SQUARE (R.M.S.) MICRO-INCH ROUGHNESS VALUES AND ARE THE MAXIMUM ROUGHNESS ACCEPTABLE, UNLESS OTHERWISE SPECIFIED.
FINISH ROUGHNESS TO BE 125 √ OR BETTER.

RECOMMENDED MATERIAL AND HEAT TREAT
MATERIAL
HEAT TREAT
HARDNESS
COLOR
HEAT TREAT AND COLOR TO BE DONE BY REMINGTON

ALTERATIONS

ALT	MAG	REF	BY	DATE

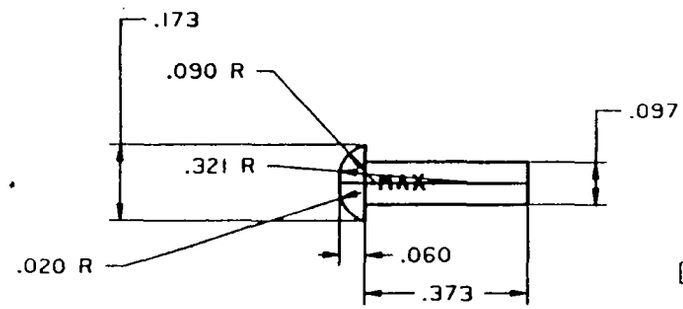

NBAR	14632	TRIGGER HOUSING RIVET-MAX
MODEL	PART NO.	PART USE

DES. BY DATE	DRN. BY DATE	CHK. BY DATE	APP. BY DATE
	TJP 1-4-88		

TITLE RIVET

NUMBER	SCALE	SUPERSEDES	REFERENCE
B-14632	4X		

REMINGTON ARMS CO. INC.
ILION RESEARCH DIV.

CV FILENAME - REG.NBAR.RIVET-MAX.EAK

R2539831

CONFIDENTIAL-SUBJECT TO PROTECTIVE ORDER
KINZER V. REMINGTON

-B

THIS DRAWING OR INFORMATION IS PROPRIETARY INFORMATION TO THE REMINGTON ARMS COMPANY, INC.

DO NOT SCALE THIS DRAWING: WORK TO FIGURES UNLESS OTHERWISE NOTED.
TOLERANCES ON DECIMAL DIMENSIONS ARE:
1 PLACE (.1) - TOLERANCE ± .015
2 PLACE (.01) - TOLERANCE ± .010
3 PLACE (.001) - TOLERANCE ± .005
& ON FRACTIONAL DIMENSIONS ± 1/64
& ON ANGULAR DIMENSIONS ± 00°-30'
FINISHES ARE DESIGNATED BY ROOT MEAN SQUARE (R.M.S.) MICRO-INCH ROUGHNESS VALUES AND ARE THE MAXIMUM ROUGHNESS ACCEPTABLE, UNLESS OTHERWISE SPECIFIED.

FINISH ROUGHNESS TO BE 125 √ OR BETTER.

RECOMMENDED MATERIAL AND HEAT TREAT

MATERIAL _____
HEAT TREAT _____
HARDNESS _____
COLOR _____

HEAT TREAT AND COLOR TO BE DONE BY REMINGTON

ALTERATIONS

ALT	DWG	REF.	BY	DATE

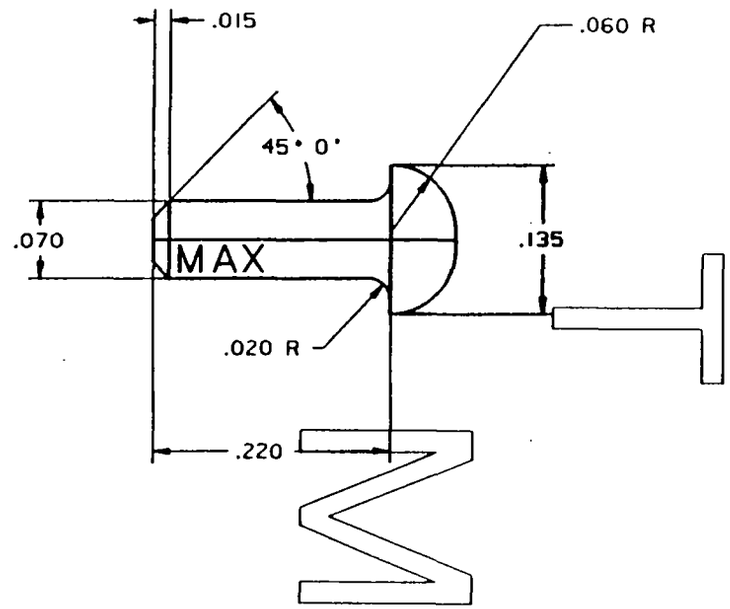

NBAR	93655	TRIGGER PLUNGER-MAX
MODEL	PART NO.	PART USE

DES. BY DATE	DWN. BY DATE	CHK. BY DATE	APP. BY DATE
	TJP 1-4-88		

TITLE PLUNGER

NUMBER	SCALE	SUPERSEDES	REFERENCE
B-93655	10X		

REMINGTON ARMS CO. INC.
ILION RESEARCH DIV.

CV FILENAME - RES.NBAR.TRIG-PLUNGER-MAX.EAK

R2539832

CONFIDENTIAL-SUBJECT TO PROTECTIVE ORDER
KINZER V. REMINGTON

B-

THIS DRAWING OR INFORMATION IS PROPRIETARY INFORMATION TO THE REMINGTON ARMS COMPANY, INC.

DO NOT SCALE THIS DRAWING: WORK TO FIGURES UNLESS OTHERWISE NOTED.
TOLERANCES ON DECIMAL DIMENSIONS ARE:
1 PLACE 1.1 - TOLERANCE ± .015
2 PLACE 1.01 - TOLERANCE ± .010
3 PLACE 1.001 - TOLERANCE ± .005
& ON FRACTIONAL DIMENSIONS ± 1/64
& ON ANGULAR DIMENSIONS ± 00° 30'
FINISHES ARE DESIGNATED BY ROOT MEAN SQUARE (R.M.S.) MICRO-INCH ROUGHNESS VALUES AND ARE THE MAXIMUM ROUGHNESS ACCEPTABLE. UNLESS OTHERWISE SPECIFIED,

FINISH ROUGHNESS TO BE 125 √ OR BETTER.

RECOMMENDED MATERIAL AND HEAT TREAT

MATERIAL _____
HEAT TREAT _____
HARDNESS _____
COLOR _____

HEAT TREAT AND COLOR TO BE DONE BY REMINGTON

ALTERATIONS

ALT	WAS	REF	BY	DATE

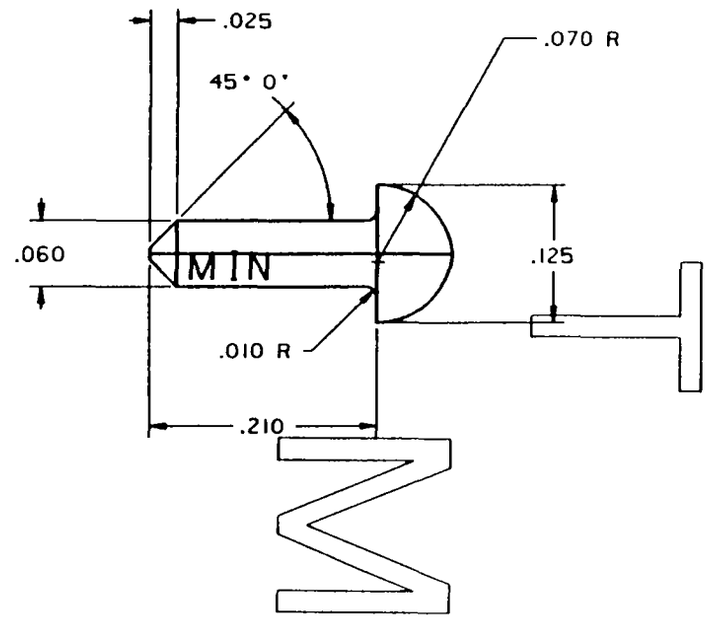

NBAR	93655	TRIGGER PLUNGER-MIN
MODEL	PART NO.	PART USE

DES. BY DATE	DRN. BY DATE	CHK. BY DATE	APP. BY DATE
	TJP 1-4-88		

TITLE PLUNGER

NUMBER	SCALE	SUPERSEDES	REFERENCE
B-93655	10X		

REMINGTON ARMS CO. INC.
ILION RESEARCH DIV.

CV FILENAME - RES.NBAR.TRIG-PLUNGER-MIN.EAN

R2539833