C6349197

MODEL 700™ M24

Model SWS ™

Action

Barrel Length

Capacity

Order No. 5716

*Includes 1 in chamber.

Remington

BARBER - M24 0109941

BARBER - M24 0109980

CONFIDENTIAL-SUBJECT TO PROTECTIVE ORDER
KINZER V. REMINGTON

Remington® DU PONT REG. U.S. PAT & TM OFF

VERY IMPORTANT: Instruction Book enclosed to assure safe use of this firearm.

MODEL 700™ M24

SERIAL NO. C6349197

ORDER NO. 5716

MADE IN ILION, N.Y. U.S.A. Reg. U.S. Pat & Tm. Off, Marca Registrada Marque Deposee. 01

5716 C6349197

UPC

0 47700 25716 7

CONFIDENTIAL-SUBJECT TO PROTECTIVE ORDER
KINZER V. REMINGTON

C634 9197

MOD. _____ GA. CAL. _____ GUN # _____

# TEST	DATE	MALFUNCTION/DEFECT	ASSEM. #
	1st		
	5/1/90	REAR STUD HOLE STRIPPED	WB
	2nd		
	3rd		
	4th		
		FUNCTION RD 6554	Rev 1

TEST INIT.	ACTION TO CORRECT	ASSEM. #
PROOF	New Stock	5/
TEST		1/
TGT		90 RW
PROOF	Reshot	5-3-90
TEST		DH
TGT		
PROOF	ENGINEER	
TEST		
TGT		
PROOF	ENGINEER	
TEST		
TGT		

New Stock

M-24

CONTRACT # DAAA21-87-C-0086

GUN SERIAL # C6349197

OP. #	OP. NAME	READINGS	DATE	INIT
575 & 580	Assemble Action and Stock	3 31	90	RW
600	Proof	3 31	90	RW
607	Check Headspace	3 31	90	RW
610	Dis-assemble Gun	3 31	90	RW
612	Magnaflux Barrel Action	4-2-90		KCR
	Magnaflux Bolt	4-2-90		KCR
615	Rollmark Caliber	4-2-90		GL
617	Drill and Tap Sight Holes		4/4/90	KB
618	Polish Barrel RB		4/5/90	WB
620	Apply Coatings (Barrel Action)		4-9-90	TJA
	Apply Coating (Bolt)			
625	Final Assembly A) Clean inside of Bolt Assembly		4/18/90	RW
	B) Inspect Rear Firing Pin Hole for Chamfer in Bolt Head		4/18/90	RW
	C) Inspect Ejector Hole for Chamfer		4/18/90	RW
	D) Oil Firing Pin Ass'y		4/18/90	RW
	E) Adjust Trigger Pull to Min Setting and Stake		4/24/90	RL

CONFIDENTIAL-SUBJECT TO PROTECTIVE ORDER
KINZER V. REMINGTON

op. #	OP. NAME	READINGS					DATE	INIT
625 cont.	F) Safety On Force	5	5	5			4/27/90	[illegible]
	G) Safety Off Force	2	2	2			4/27/90	[illegible]
	H) Trigger Pull Test & Retainability						4/26/90	[illegible]
	I) Firing Pin Indent	.0205	.0205	.020			4/27/90	[illegible]
	J) Assemble Stock						4/30/90	RW
	K) Assemble Swivel Studs						5/8/90	WB
	L) Attach Front and Rear Sight Assemblies						4/30/90	RW
	M) Iron Sight Alignment						4/30/90	RW
	N) Detach Front & Rear Sights & place in numbered container						4/30/90	RW
	O) Attach Scope to Rifle						4/30/90	[illegible]
	P) Detach & Attach Scope 20 Times						4/30/90	[illegible]
640	Gallery Target & Test						4-30-90	DH
	A) Time						4-30-90	DH
	B) Malfunctions						4-30-90	DH
	C) Pierced Primers						4-30-90	DH
	D) Optical Clearity of Scope						4-30-90	DH
645	Inspect for Live Ammo						4-30-90	DH
655	Final Inspection A) Headspace						5/8/90	WB
	B) Trigger Pull	2.15	2.19	2.18	2.15	2.20	5/1/90	WB
	C) Function						5/8/90	WB
660	Pack						6-19-90	DH

SWS TRIGGER PULL TEST

AVERAGE PULL FORCE BETWEEN
INITIAL & CYCLE TESTS
2.50# ± .50#
3.00# ± .75#
4.00# ± 1.00#

SERIAL NO. C6349197
DATE 4/26/90
TESTER JEL

	2.50# INITIAL	2.50# AFTER 50 CYCLES	FINAL TEST & TO RESET 2.50#		COMMENTS
PULL #1	2.59	2.35	2.44	2.15	MIN. SETTING,
PULL #2	2.50	2.39	2.50	2.19	NO AVG. OF 5
PULL #3	2.42	2.31	2.47	2.18	READINGS ACCEPT-
PULL #4	2.33	2.57	2.29	2.15	ABLE LESS THAN 2#
PULL #5	2.44	2.50	2.34	2.20	
TOTAL	12.18	12.12	12.04		
AVG.	2.436	2.424	2.408		

	3.00# INITIAL	3.00# AFTER 20 CYCLES		COMMENTS
PULL #1	3.37	3.43		
PULL #2	3.34	3.40		
PULL #3	3.36	3.39		
PULL #4	3.40	3.38		
PULL #5	3.39	3.39		
TOTAL	16.86	16.99		
AVG.	3.372	3.398		

	4.00# INITIAL	4.00# AFTER 20 CYCLES	MAX SETTING GREATER THAN 4#	RESET TO 4# FOR TARGET & ACCURACY
PULL #1	4.32	4.38		4.32
PULL #2	4.24	4.20		4.12
PULL #3	4.24	4.25		4.25
PULL #4	4.14	4.07		4.14
PULL #5	4.18	4.34		4.18
TOTAL	21.12	21.24		21.01
AVG.	4.224	4.248		4.202

CENTROIDAL DISTANCE CALCULATIONS
FOR RIFLE # C6349197
1 May 1990

CENTROIDAL DISTANCES

0	TO	1	.262017
1	TO	2	.169012
1	TO	3	.24473
1	TO	4	.516841
1	TO	5	.29553

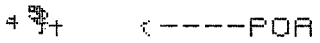

THE AVERAGE X-COORDINATE FOR THIS RIFLE IS: -.3898
THE AVERAGE Y-COORDINATE FOR THIS RIFLE IS: .1554
THE RESULTING AVERAGE POI RADIUS FOR THIS RIFLE IS: .419635

THE AMR FOR THIS RIFLE IS: .8166

1 May 1990 FILE:/PATTERNING/CENTERFIRE_PATT/C6349197

CENTERFIRE PATTERNS # 1

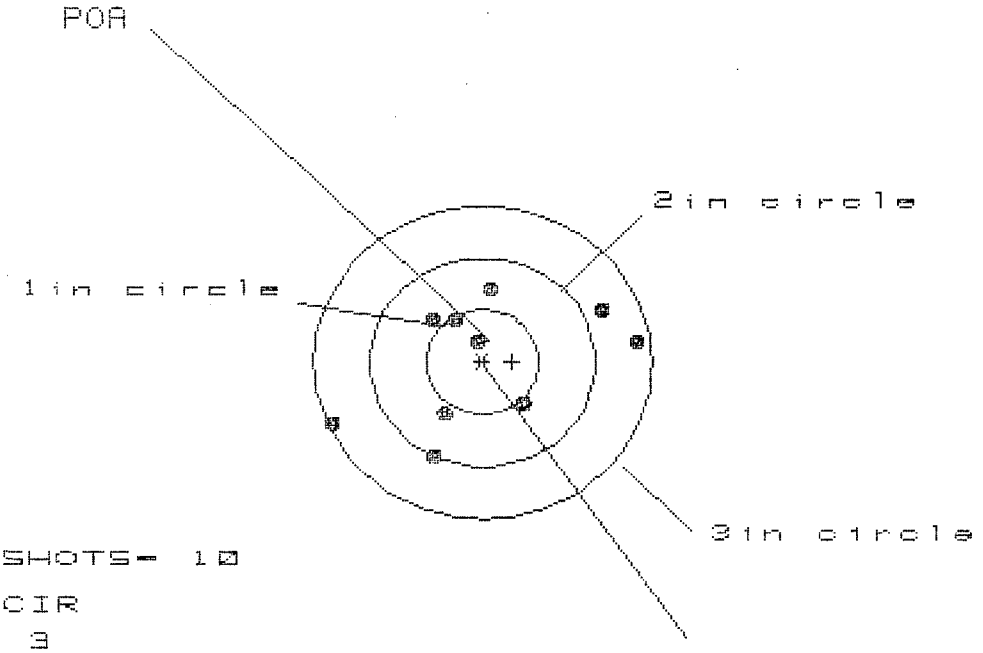

OF SHOTS= 10

# IN CIR
1in = 3
2in = 5
3in = 10

HS= 2.648
VS= 1.576
GS= 2.780

PATTERN #	:	1	
SHOTS (BEST OF)	:	10	9	8
MAXIMUM X	:	1.316	1.168	1.060
MINIMUM X	:	-1.332	-.622	-.476
MAXIMUM Y	:	.669	.600	.619
MINIMUM Y	:	-.907	-.976	-.957
CENTROID X	:	-.262	-.114	-.260
CENTROID Y	:	-.003	.066	.047
POA TO CENTROID in.	:	.262	.132	.264
MIN RADIUS	:	.192	.201	.143
MEAN RADIUS	:	.804	.728	.646
MAX RADIUS	:	1.470	1.178	1.136
HORIZONTAL SPREAD	:	2.648	1.790	1.536
VERTICAL SPREAD	:	1.576	1.576	1.576
EXTREME SPREAD	:	2.780	2.111	2.049

NUMBER IN ONE INCH CIRCLE = 3
NUMBER IN TWO INCH CIRCLE = 6
NUMBER IN THREE INCH CIRCLE = 10

1 May 1990 FILE:/PATTERNING/CENTERFIRE_PATT/C6349197

CENTERFIRE PATTERNS # 2

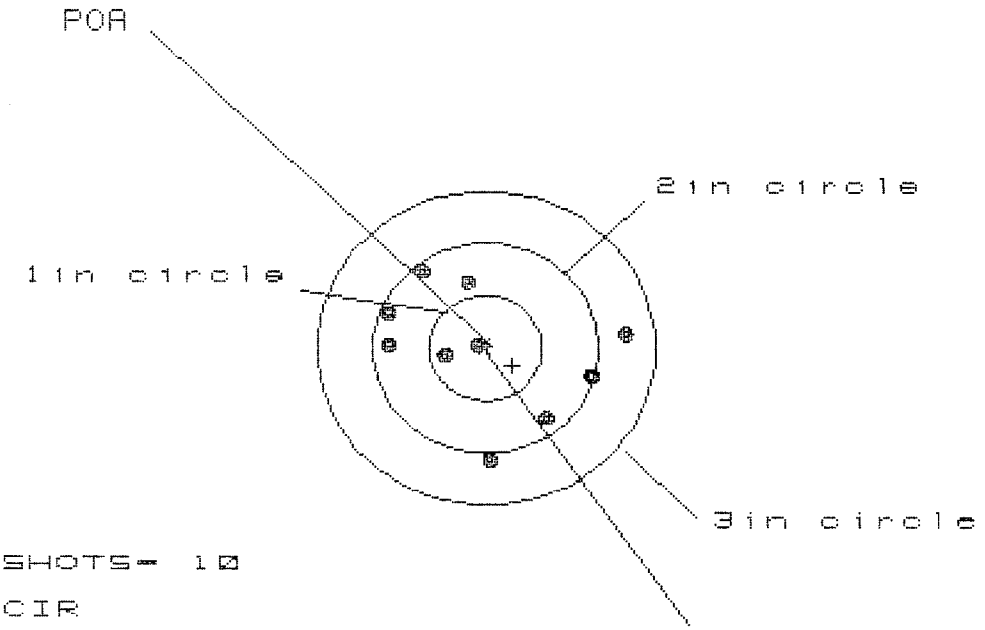

OF SHOTS= 10

# IN CIR
1in = 2
2in = 7
3in = 10

HS= 2.182
VS= 1.772
GS= 2.190

PATTERN #	:	2	
SHOTS (BEST OF)	:	10	9	8
MAXIMUM X	:	1.284	1.122	1.140
MINIMUM X	:	-.897	-.755	-.737
MAXIMUM Y	:	.752	.770	.645
MINIMUM Y	:	-1.020	-1.002	-.732
CENTROID X	:	-.236	-.379	-.397
CENTROID Y	:	.164	.146	.271
POA TO CENTROID in.	:	.288	.406	.480
MIN RADIUS	:	.087	.131	.117
MEAN RADIUS	:	.804	.728	.675
MAX RADIUS	:	1.296	1.151	1.202
HORIZONTAL SPREAD	:	2.182	1.877	1.877
VERTICAL SPREAD	:	1.772	1.772	1.377
EXTREME SPREAD	:	2.190	1.982	1.982
NUMBER IN ONE INCH CIRCLE	=		2	
NUMBER IN TWO INCH CIRCLE	=		7	
NUMBER IN THREE INCH CIRCLE	=		10	

1 May 1990 FILE:/PATTERNING/CENTERFIRE_PATT/C6349197

CENTERFIRE PATTERNS # 3

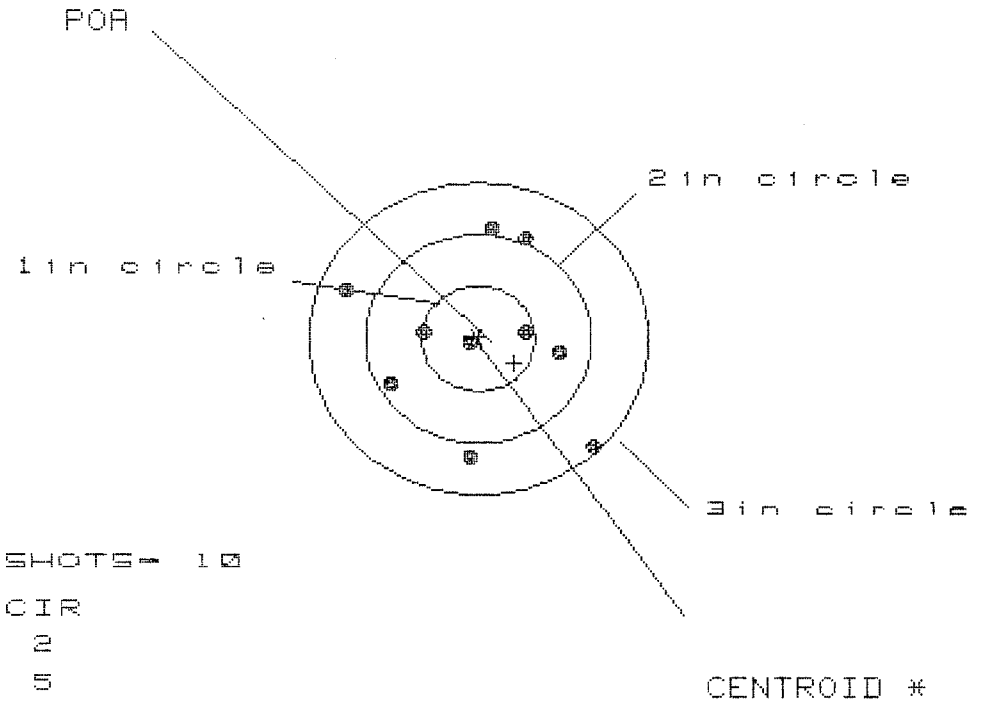

OF SHOTS= 10

# IN CIR
1in = 2
2in = 5
3in = 10

HS= 2.174
VS= 2.166
GS= 2.653

PATTERN #	:	3	
SHOTS (BEST OF)	:	10	9	8
MAXIMUM X	:	.979	.815	.679
MINIMUM X	:	-1.195	-1.086	-.827
MAXIMUM Y	:	1.032	.920	.969
MINIMUM Y	:	-1.134	-1.246	-1.197
CENTROID X	:	-.319	-.428	-.292
CENTROID Y	:	.235	.347	.298
POA TO CENTROID in.	:	.396	.551	.417
MIN RADIUS	:	.046	.147	.107
MEAN RADIUS	:	.854	.793	.732
MAX RADIUS	:	1.407	1.247	1.200
HORIZONTAL SPREAD	:	2.174	1.901	1.506
VERTICAL SPREAD	:	2.166	2.166	2.166
EXTREME SPREAD	:	2.653	2.171	2.171
NUMBER IN ONE INCH CIRCLE	=		2	
NUMBER IN TWO INCH CIRCLE	=		5	
NUMBER IN THREE INCH CIRCLE	=		10	

1 May 1990 FILE:/PATTERNING/CENTERFIRE_PATT/C6349197

CENTERFIRE PATTERNS # 4

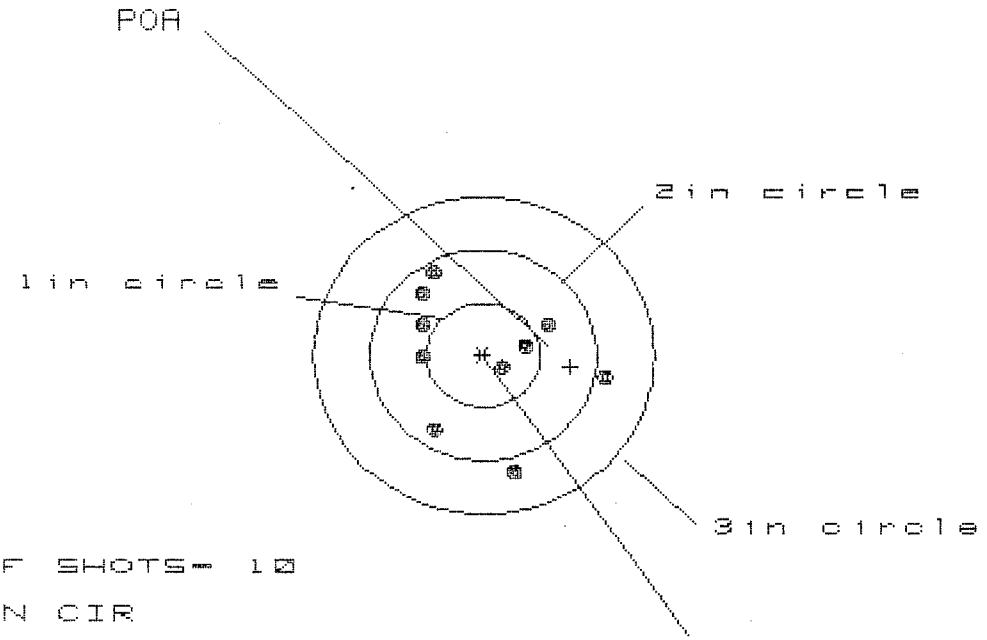

OF SHOTS= 10

# IN CIR
1in = 2
2in = 8
3in = 10

HS= 1.613
VS= 1.875
GS= 2.008

PATTERN #	:	4	
SHOTS (BEST OF)	:	10	9	8
MAXIMUM X	:	1.086	1.115	.688
MINIMUM X	:	-.527	-.498	-.359
MAXIMUM Y	:	.807	.688	.653
MINIMUM Y	:	-1.068	-.833	-.868
CENTROID X	:	-.767	-.796	-.935
CENTROID Y	:	.107	.226	.261
POA TO CENTROID in.	:	.774	.827	.971
MIN RADIUS	:	.245	.346	.372
MEAN RADIUS	:	.709	.657	.583
MAX RADIUS	:	1.099	1.149	.903
HORIZONTAL SPREAD	:	1.613	1.613	1.047
VERTICAL SPREAD	:	1.875	1.521	1.521
EXTREME SPREAD	:	2.008	1.822	1.521
NUMBER IN ONE INCH CIRCLE	=		2	
NUMBER IN TWO INCH CIRCLE	=		8	
NUMBER IN THREE INCH CIRCLE	=		10	

1 May 1990 FILE:/PATTERNING/CENTERFIRE_PATT/C6349197

CENTERFIRE PATTERNS # 5

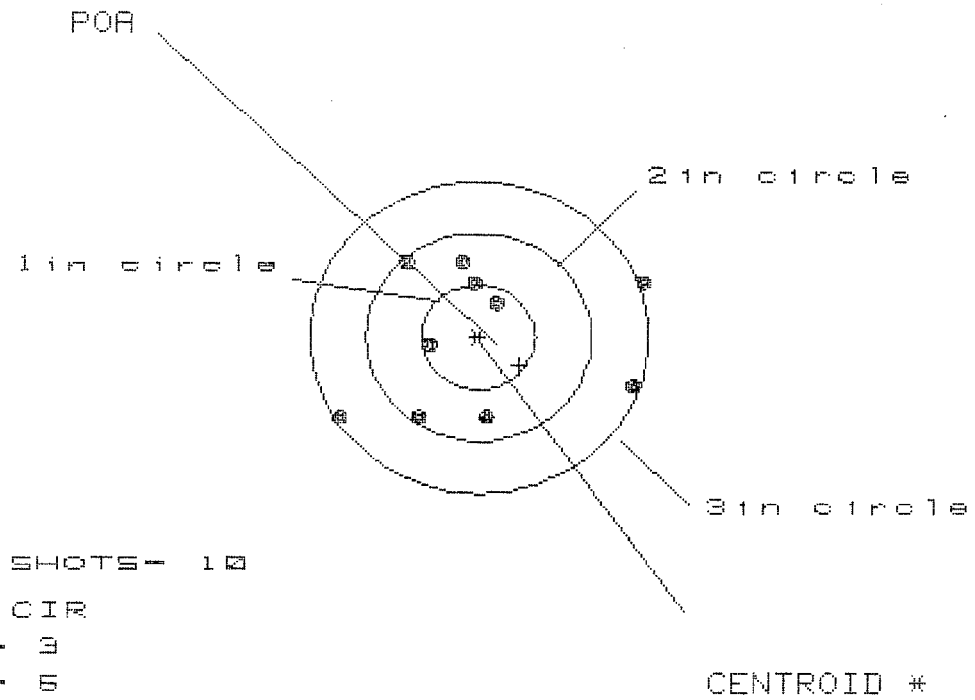

OF SHOTS= 10

# IN CIR
1in = 3
2in = 6
3in = 9

HS= 2.687
VS= 1.567
GS= 2.976

PATTERN #	:	5	
SHOTS (BEST OF)	:	10	9	8
MAXIMUM X	:	1.436	1.497	1.360
MINIMUM X	:	-1.251	-1.091	-.639
MAXIMUM Y	:	.764	.824	.740
MINIMUM Y	:	-.803	-.743	-.827
CENTROID X	:	-.365	-.525	-.388
CENTROID Y	:	.274	.214	.298
POA TO CENTROID in.	:	.457	.567	.489
MIN RADIUS	:	.387	.236	.382
MEAN RADIUS	:	.912	.826	.761
MAX RADIUS	:	1.536	1.548	1.442
HORIZONTAL SPREAD	:	2.687	2.588	1.999
VERTICAL SPREAD	:	1.567	1.567	1.567
EXTREME SPREAD	:	2.976	2.603	2.341
NUMBER IN ONE INCH CIRCLE	=		3	
NUMBER IN TWO INCH CIRCLE	=		6	
NUMBER IN THREE INCH CIRCLE	=		9	

CENTROIDAL DISTANCE CALCULATIONS
FOR RIFLE # C6349197
4 May 1990

CENTROIDAL DISTANCES

0	TO	1	.24226
1	TO	2	.244788
1	TO	3	.393235
1	TO	4	.317775
1	TO	5	.161447

THE AVERAGE X-COORDINATE FOR THIS RIFLE IS: .0162
THE AVERAGE Y-COORDINATE FOR THIS RIFLE IS: .0604
THE RESULTING AVERAGE POI RADIUS FOR THIS RIFLE IS: .0625348

THE AMR FOR THIS RIFLE IS: .9146

4 May 1990 FILE:/PATTERNING/CENTERFIRE_PATT/C6349197.1

CENTERFIRE PATTERNS # 1

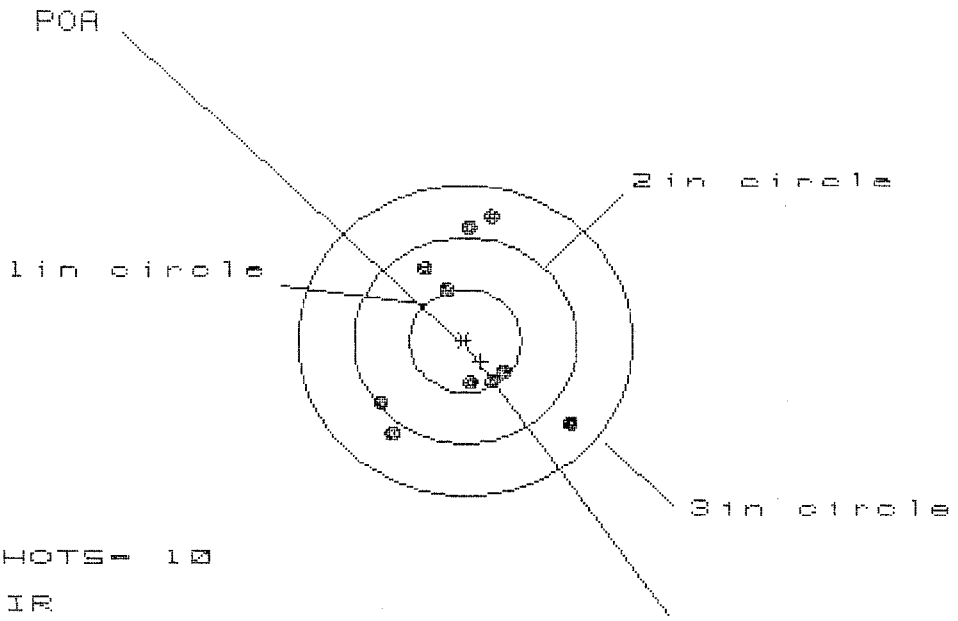

OF SHOTS= 10

# IN CIR
1in = 3
2in = 6
3in = 10

HS= 1.685
VS= 2.122
GS= 2.282

PATTERN #	:	[redacted]	
SHOTS (BEST OF)	:	10	9	8
MAXIMUM X	:	.942	.968	.493
MINIMUM X	:	-.743	-.717	-.596
MAXIMUM Y	:	1.197	1.212	1.132
MINIMUM Y	:	-.925	-.792	-.872
CENTROID X	:	-.141	-.167	-.288
CENTROID Y	:	.197	.064	.144
POA TO CENTROID in.	:	.243	.179	.322
MIN RADIUS	:	.442	.312	.423
MEAN RADIUS	:	.825	.761	.722
MAX RADIUS	:	1.218	1.212	1.143
HORIZONTAL SPREAD	:	1.685	1.685	1.089
VERTICAL SPREAD	:	2.122	2.004	2.004
EXTREME SPREAD	:	2.282	2.100	2.100

NUMBER IN ONE INCH CIRCLE = 3
NUMBER IN TWO INCH CIRCLE = 6
NUMBER IN THREE INCH CIRCLE = 10

4 May 1990 FILE:/PATTERNING/CENTERFIRE_PATT/C6349197.1

CENTERFIRE PATTERNS # 2

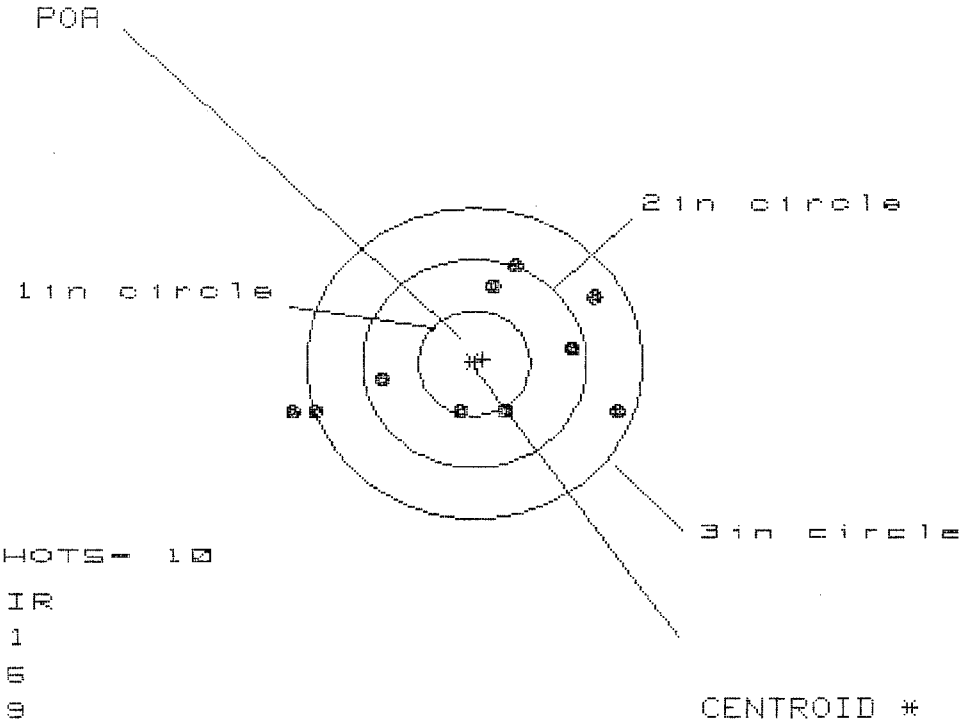

OF SHOTS= 10

# IN CIR
1in = 1
2in = 6
3in = 9

HS= 2.913
VS= 1.413
GS= 2.914

PATTERN #	:	2	
SHOTS (BEST OF)	:	10	9	8
MAXIMUM X	:	1.314	1.136	.938
MINIMUM X	:	-1.599	-1.586	-1.244
MAXIMUM Y	:	.915	.868	.811
MINIMUM Y	:	-.498	-.545	-.602
CENTROID X	:	-.076	.102	.300
CENTROID Y	:	-.039	.008	.065
POA TO CENTROID in.	:	.085	.102	.307
MIN RADIUS	:	.439	.534	.505
MEAN RADIUS	:	1.022	.931	.817
MAX RADIUS	:	1.654	1.651	1.283
HORIZONTAL SPREAD	:	2.913	2.722	2.182
VERTICAL SPREAD	:	1.413	1.413	1.413
EXTREME SPREAD	:	2.914	2.723	2.201
NUMBER IN ONE INCH CIRCLE	=		1	
NUMBER IN TWO INCH CIRCLE	=		6	
NUMBER IN THREE INCH CIRCLE	=		9	

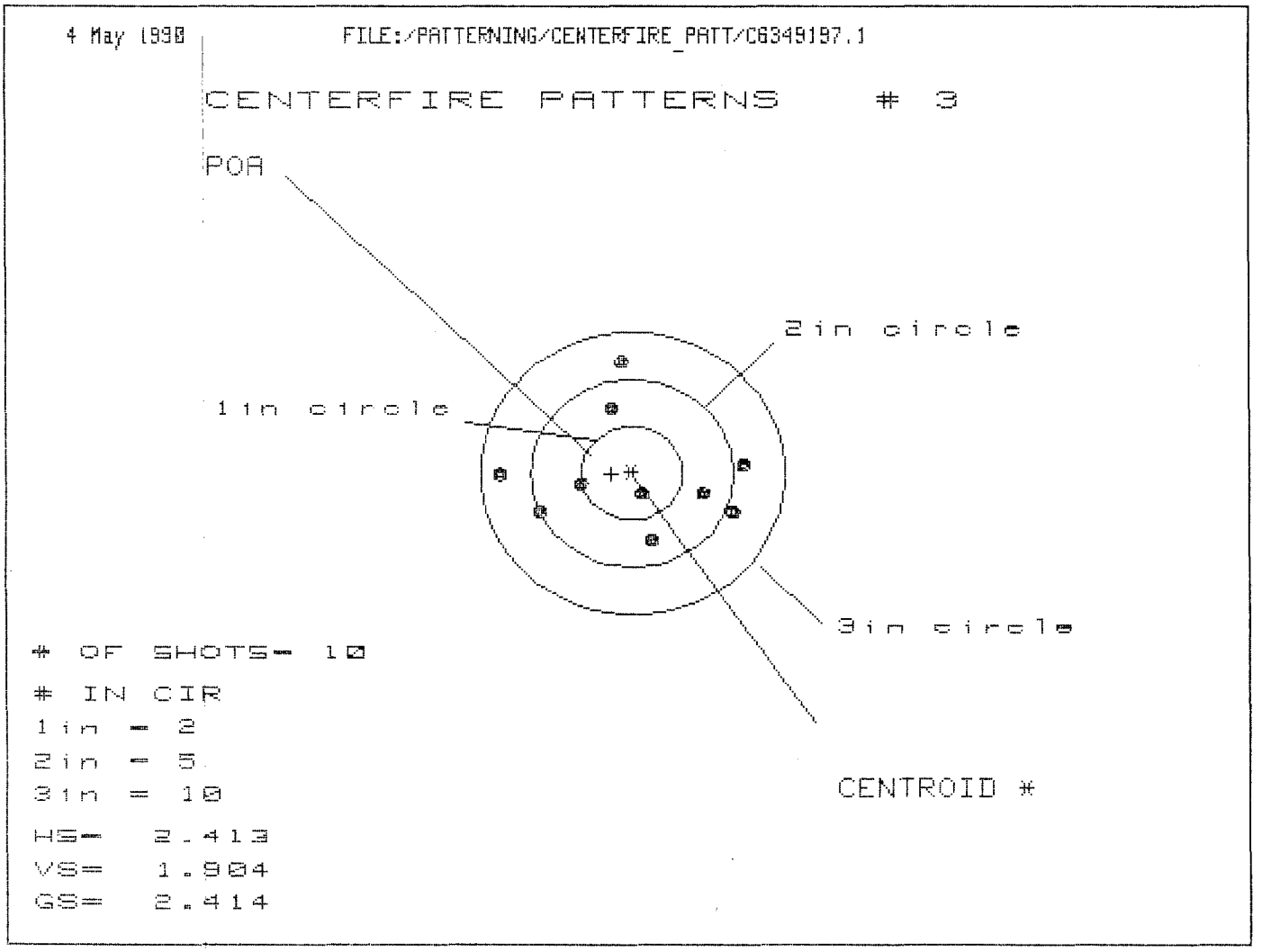

PATTERN #	:	32		
SHOTS (BEST OF)	:	10	9	8
MAXIMUM X	:	1.107	.962	.925
MINIMUM X	:	-1.306	-1.080	-1.117
MAXIMUM Y	:	1.227	1.229	.870
MINIMUM Y	:	-.677	-.675	-.521
CENTROID X	:	.206	.351	.388
CENTROID Y	:	.012	.010	-.144
POA TO CENTROID in.	:	.206	.351	.414
MIN RADIUS	:	.176	.180	.116
MEAN RADIUS	:	.858	.798	.711
MAX RADIUS	:	1.306	1.265	1.150
HORIZONTAL SPREAD	:	2.413	2.042	2.042
VERTICAL SPREAD	:	1.904	1.904	1.391
EXTREME SPREAD	:	2.414	2.105	2.105
NUMBER IN ONE INCH CIRCLE	=		2	
NUMBER IN TWO INCH CIRCLE	=		5	
NUMBER IN THREE INCH CIRCLE	=		10	

4 May 1990 FILE:/PATTERNING/CENTERFIRE_PATT/C6349197.1

CENTERFIRE PATTERNS # 4

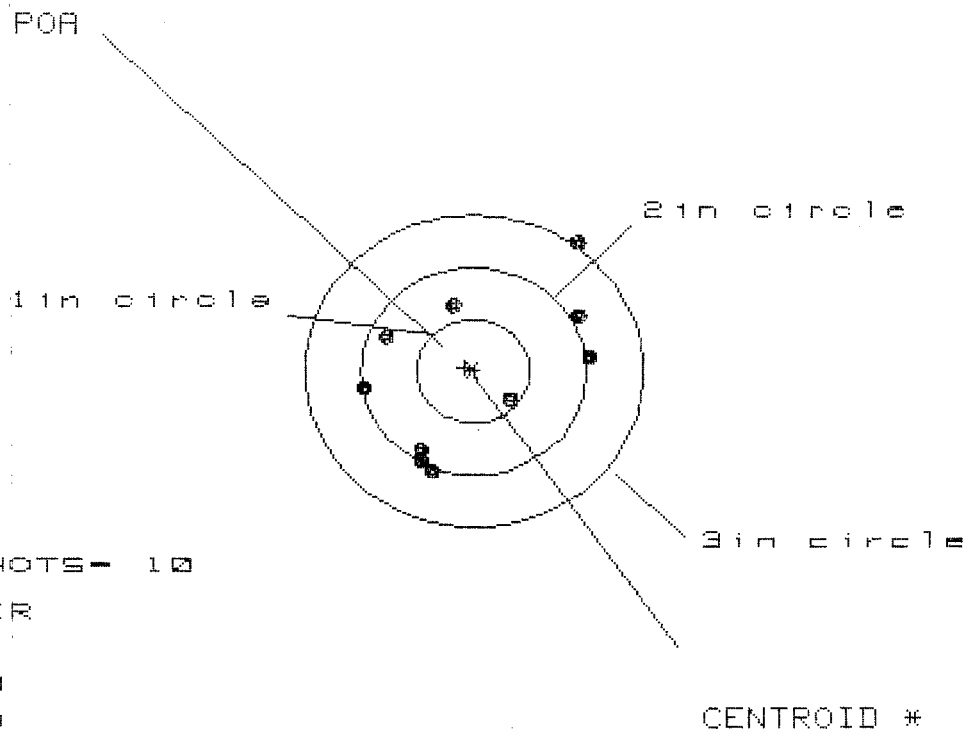

OF SHOTS= 10

# IN CIR
1in = 1
2in = 8
3in = 9

HS= 1.961
VS= 2.196
GS= 2.532

PATTERN #	:	[redacted]	
SHOTS (BEST OF)	:	10	9	8
MAXIMUM X	:	.983	1.086	1.213
MINIMUM X	:	-.978	-.875	-.748
MAXIMUM Y	:	1.260	.774	.862
MINIMUM Y	:	-.935	-.795	-.707
CENTROID X	:	.074	-.029	-.156
CENTROID Y	:	-.037	-.177	-.265
POA TO CENTROID in.	:	.083	.179	.308
MIN RADIUS	:	.435	.468	.580
MEAN RADIUS	:	.943	.853	.781
MAX RADIUS	:	1.566	1.239	1.260
HORIZONTAL SPREAD	:	1.961	1.961	1.961
VERTICAL SPREAD	:	2.196	1.569	1.569
EXTREME SPREAD	:	2.532	2.013	1.975
NUMBER IN ONE INCH CIRCLE	=		1	
NUMBER IN TWO INCH CIRCLE	=		8	
NUMBER IN THREE INCH CIRCLE	=		9	

4 May 1990 FILE:/PATTERNING/CENTERFIRE_PATT/C6349197.1

CENTERFIRE PATTERNS # 5

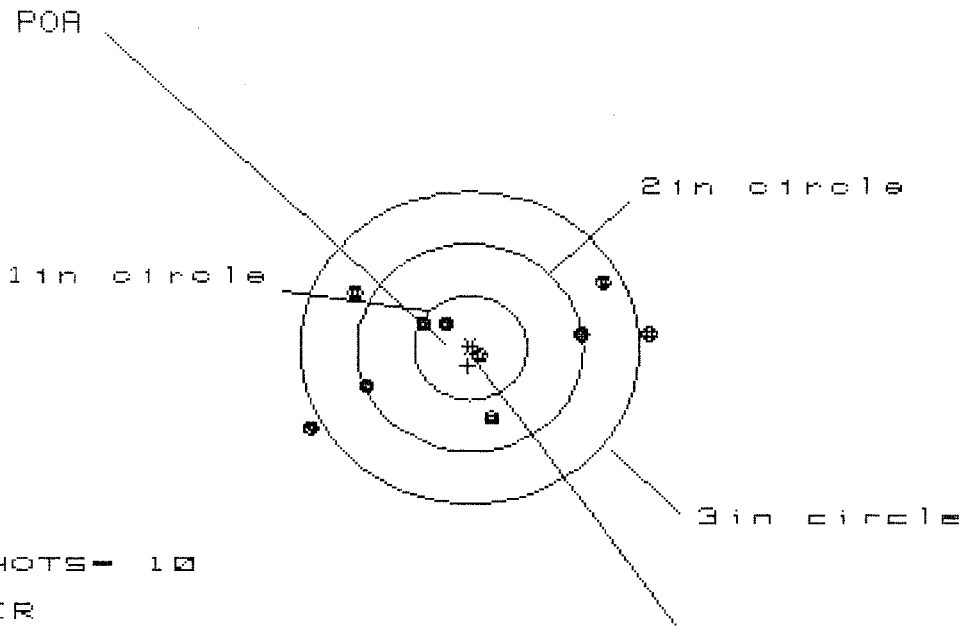

OF SHOTS= 10

# IN CIR
1in = 3
2in = 6
3in = 8

HS= 2.948
VS= 1.388
GS= 3.079

PATTERN #	:	5	
SHOTS (BEST OF)	:	10	9	8
MAXIMUM X	:	1.565	1.411	1.200
MINIMUM X	:	-1.383	-1.180	-1.003
MAXIMUM Y	:	.614	.528	.532
MINIMUM Y	:	-.774	-.792	-.788
CENTROID X	:	.018	.172	-.005
CENTROID Y	:	.169	.255	.252
POA TO CENTROID in.	:	.170	.307	.252
MIN RADIUS	:	.129	.174	.204
MEAN RADIUS	:	.925	.862	.760
MAX RADIUS	:	1.585	1.412	1.312
HORIZONTAL SPREAD	:	2.948	2.591	2.203
VERTICAL SPREAD	:	1.388	1.320	1.320
EXTREME SPREAD	:	3.079	2.629	2.317
NUMBER IN ONE INCH CIRCLE	=		3	
NUMBER IN TWO INCH CIRCLE	=		6	
NUMBER IN THREE INCH CIRCLE	=		8	

SWS/Repair

Final Inspection

Sn: C6349197	DATE REC'D: 8/15/94	DATE RET'D:

Auditor: RW

Item:

Barrel Assy.
- ✓ Barrel
- ✓ Receiver
- ✓ Front Sight Block
- ✓ Rear Sight Block
- ✓ Screws
- ✓ Finish

Scope Assy.
- ✓ Scope
- ✓ Scope Rings
- ✓ Mounting Screws
- ✓ Mounting Base
- ✓ Screws
- ✓ Finish
- ✓ Looseness
- ✓ Clarity

Misc.
- ___ DD-250
- ___ Bar Code
- ___ Packaging

Item:

Stock Assy.
- ✓ Stock
- ✓ Sling Swivel Studs
- ✓ Adjustable Butt Plate
- ✓ Lock Nuts
- ✓ Barrel Clearance
- ✓ Color/Finish

Systems Case
- ___ Scope Case
- ___ Iron Sights
- ___ Deployment Kit

Trigger
- ✓ Safety Operation
- ✓ Set
- ___

Comments: _____

RECEIVING AND ESTIMATING REPORT

COMMENTS: ATTN: Fred MARTIN
W/ULTRA 10X-M3A SCOPE
M-24

ORDER R 94-23637

INITIAL	CUSTOMER ORDER NO.
FPS	

DATE RECEIVED	DATE OPENED	DATE CODE	SERIAL NUMBER	NEW SERIAL NUMBER	MODEL AND GRADE
08/15/94	08/15/94	CK 4-90	C6349197		700 7.62 NATO

ACCESSORIES: W/STUDS SCOPE MNTS SCOPE BASE SOFT CASE

FROM:
DEPT OF THE ARMY
DIRECTOR OF LOGISTICS
3 NASH BLVD.
FORT DRUM NY 13602

SHIP TO:
DEPT OF THE ARMY
DIRECTOR OF LOGISTICS
3 NASH BLVD.
FORT DRUM NY 13602

CUST NO: 101483 C.O.D

ACCOUNT NUMBER	ACCOUNT NUMBER N/C	WRITE	PROM. DATE	ESTIMATED	VIA
		☐			R595688771

GUN CONDITION
- ☐ NEW
- ☐ LIGHTLY WORN
- ☐ WORN
- ☐ VERY WORN
- ☐ UNREPAIRABLE
- ☐ MARRED

REPAIR CHARGE	
EXCISE	
TAX	
INSURANCE	
UPS	
PARCEL POST	
TOTAL	

CUSTOMER CONCERN	AMMO	FUNCTION	FINISH	ACCURACY	FIT	INSPECT
CYCLE	A1	B1				
TRIGGER GROUP		B2			E1	F1
BOLT ASSY.		B3			E2	F2
BARREL ASSY.		B4		D1	E3	F3
REC. ASSY.		B5		D2	E4	F4
WOOD			C1	D3	E5	F5
METAL			C2			

MAIN FAULT: Bolt Binds finish Bad Elevation Knob will Not Turn all the way, Barrel Not Free Floating

PARTS
New Stock - 96018
Bolt - 96005
Firing pin Assy - 96007
Mag Box - 96013

COMMENTS
Repowder Coat Barreled Action
Trigger Guard Assy, Front + Rear Sight Bases
Rezinc Scope Base, Rings + Swivel Studs

Free Float Barrel + Adjusted Elevation Knob

W52H094223 #228

REPAIRMAN	PROOF	CLEAN	TEST	TARGET	PATTERN
RW	✓	✓	✓		
GALLERY TESTER	**DATE**	**DATE**	**DATE**	**DATE**	**DATE**
RW	9/1/94	9/13/94	9/13/94		

OFFICE COPY

RD6925 REV. 1/94

DA Label 18-1, Sep 83
Edition of Oct 74 will be used until exhausted.

DEPARTMENT OF THE ARMY
DIRECTOR OF LOGISTICS
3 NASH BLVD
FORT DRUM NY 13602 5095

OFFICIAL BUSINESS
PENALTY FOR PRIVATE USE, $300

REMINGTON ARMS CO INC
ATTN: FABRICATED PRODUCTS DEP
14 HOEFLER AVE
ILION NY 13357 1816

POC: FRED MARTIN

REGISTERED MAIL
R 595 688 771

DOC IDENT	RI FROM	M&S	STOCK NUMBER FSC	STOCK NUMBER NIIN	ADD	UNIT OF ISSUE	QUANTITY	DOCUMENT NUMBER SERIAL	REQUISITIONER	DATE	SERIAL	SUFFIX	SUPPLEMENTARY ADDRESS	SIGNAL	FUND	DISTRIBUTION	PROJECT	PRIORITY	REQ'D DEL DATE	ADVICE	RI	UNIT PRICE DOLLARS	CTS
A5AAX4			1005	012402136		EA	00001	N16BE74	2200121				REMINGNGA				MR203000			AWXMF		5145	00

SHIPPED FROM: CONS PROP ACCT FT DRUM FT DRUM NY 13602

SHIP TO: ~~REMING~~ Remington Arms Co Inc ATN: Fabricated Products Dep 14 Hooper Ave Ilion NY 13357-1816

MARK FOR: REMING PPL

PROJECT: MR2 NATCAT NJ

RECEIVED 4220

TOTAL PRICE: DOLLARS 5145.00 CTS

WAREHOUSE LOCATION	TYPE OF CARGO	UNIT PACK	UNIT WEIGHT	UNIT CUBE	UFC	NMFC	FREIGHT RATE	DOCUMENT NUMBER	MAT COND	QUANTITY		
T0004 A 00000M	AE	001		.10.001			LTL	4 TIME 1217	F	00001	SHELF LIFE	STD 4220 OTTD 4221

SUBSTITUTE DATA (ITEM ORIGINALLY REQUESTED)

FREIGHT CLASSIFICATION NOMENCLATURE

ITEM NOMENCLATURE: C 6349197 RIFLE 7.62MM SNIP M24

SENSITIVE ITEM
MAJOR ITEM

SHIPPERS USE			RECEIVERS USE		
SELECTED BY AND DATE: Walsh 4223	TYPE OF CONTAINER(S): CT	TOTAL WEIGHT: 20.0 LB	RECEIVED BY AND DATE	INSPECTED BY AND DATE	
PACKED BY AND DATE: Walsh 4223 4AS306001/001	NO OF CONTAINER(S): 1	TOTAL CUBE: 2.0 .001	WAREHOUSED BY AND DATE: REG MAIL NO	WAREHOUSE LOCATION	

REMARKS: HC/A INSPECTION REQUIRED SIGNATURE REQUIRED

TP1

FIRST DESTINATION ADDRESS

DATE SHIPPED: G 4223

PKG REF MILSTD207

13 TRANSPORTATION CHARGEABLE TO

14 B/LADING, AWB, OR RECEIVER'S SIGNATURE (AND DATE)

15 RECEIVER'S DOCUMENT NUMBER: TCN W16BE7 4220 0121 XXX

DD FORM 1348-1A, SEP 87 *(BLUE)* *Jun 86 edition may be used.* FORM APPROVED. OMB NO. 0704-0188 DOD SINGLE LINE ITEM RELEASE/RECEIPT DOCUMENT

EQUIPMENT INSPECTION AND MAINTNCE WORKSHEET

For use of this form, see DA PAM 738-750 and 738-75 respective agency's DESCLOG

1. ORGANIZATION	2. NOMENCLATURE AND MODEL
HHC 2/87 Scouts	M-; Sniper Weapon System

3. REGISTRATION/SERIAL NUMBER	4a. MILES	4b. HOURS	5. ROUNDS FIRED	6. YS	7. DATE	8. TYPE INSPECTION
C-6349197					25 MAY 94	PMCS

7. APPLICABLE REFERE

TM NUMBER	TM DATE	TM NUM	TM DATE
9-1005-306-10	FEB 89		

COLUMN a — Enter TM item number

COLUMN b — Enter the applicable condition status symbol

COLUMN c — Enter deficiencies and shortcomings.

COL d — Show corrective action for deficiency or shortcoming listed in Column c

COL e — Individual maintaining completed corrective action in this column

STATUS SYMBOL

"X"—Indicates a deficiency in the equipment that places it in an inoperable status.

CIRCLED "X"—Indicates a deficiency, however, the equipment may be operated under special limitations as directed by higher authority or as prescribed locally, until corrective action can be accomplished.

HORIZONTAL DASH "(-)"—Indicates that a required inspection, component replacement, maintenance operation check, or test flight is due but has not been accomplished, or an overdue MWO has not been accomplished.

DIAG "(/)"—Indicates a material defect or other deficiency which must be corrected to the efficiency or to make the item completely safe

DASH INITIAL IN BLACK, BLUE-BLACK INK, OR PL Indicates that a completely satisfactory condition exists.

FORMAT—Manual spot checks will be recorded in red.

ALL INSPECTIONS AND EQUIPMENT CONDITIONS RECORDED THIS FORM HAVE BEEN DETERMINED IN ACCORDANCE WITH DIAGNOSTIC PROCEDURES AND STRDS IN THE TM CITED HEREON.

9a. SIGNATURE (Person(s) performing inspection)	9b. TIME	9c. SIGNATURE (Maint Supervisor)	9d. TIME	10. MANHOURS REQUIRED
[signature]	1114 25 MAY 1994	[signature]	1130	

TM ITEM NO. a	STATUS b	DEFICIENCIES AND SHORTCOMINGS c	CORRECTIVE ACTION d	INITIAL WHEN CORRECTED e
5		Bolt does not slide smooth		RL
6		Magazine spring and follower		
		do not release from magazine		
2		Blueing chipped on barrel		
2		Barrel is not free Floating		
1		CASE ET TORN		
		elevation Rack oversol		
		tight all the way		

BARBER - M24 0109965 · FACSIMILE TRANSMITTAL HEADER SHEET

For use of this form, see AR 25-11; the proponent agency is ODISC4.

	COMMAND/ OFFICE	NAME/ OFFICE SYMBOL	OFFICE TELEPHONE NO. (AUTOVON/Comm.)	FAX NO (AUTOVON/Comm.)
FROM:	DoL Ft Drum	R. Williams AFZS-DL-SPA	341-5107	341-7378
TO:	BII	George Riley AMCCOM	793-4377	793.6701

CLASSIFICATION	PRECEDENCE	NO. PAGES (Including this Header)	DATE-TIME	MONTH	YEAR	RELEASER'S SIGNATURE
UNCLAS	R	2	25	AUG	94	[signature]

REMARKS

DA Form 2404

M24 Sniper Rifle Ser# C 6349197

Space Below For Communications Center Use Only

Information Processing Branch Fort Drum, NY		AUTOVON	Commercial	Operator	XMIT Time	XMIT #
	FAX	341-5809	(315) 772-5809		Z	
	Voice	341-5525	(315) 772-5525			

DA FORM 3918-R, JUL 90 DA FORM 3918-R, AUG 72 IS OBSOLETE

EQUIPMENT INSPECTION AND MAINTENANCE WORKSHEET

For use of this form, see DA PAM 738-750 and 738-75; the proponent agency is DCSLOG

1. ORGANIZATION	2. NOMENCLATURE AND MODEL
HHC 2/87 Scouts	M- Sniper Weapon System

3. REGISTRATION/SERIAL/NSN	4a. MILES	b. HOURS	c. ROUNDS FIRED	d. HOT STARTS	5. DATE	6. TYPE INSPECTION
C-6349197					25 MAY 94	PMCS

7. APPLICABLE REFERENCE

TM NUMBER	TM DATE	TM NUMBER	TM DATE
9-1005-306-10	FEB 89		

COLUMN a – Enter TM item number.
COLUMN b – Enter the applicable condition status symbol.
COLUMN c – Enter deficiencies and shortcomings.
COLUMN d – Show corrective action for deficiency or shortcoming listed in Column c.
COLUMN e – Individual ascertaining completed corrective action initial in this column.

STATUS SYMBOL

"X" – Indicates a deficiency in the equipment that places it in an inoperable status.
CIRCLED "X" – Indicates a deficiency, however, the equipment may be operated under specific limitations as directed by higher authority or as prescribed locally, until corrective action can be accomplished.
HORIZONTAL DASH "(–)" – Indicates that a required inspection, component replacement, maintenance operation check, or test flight is due but has not been accomplished, or an overdue MWO has not been accomplished.
DIAGONAL "(/)" – Indicates a material defect other than a deficiency which must be corrected to increase efficiency or to make the item completely serviceable.
LAST NAME INITIAL IN BLACK, BLUE-BLACK INK, OR PENCIL – Indicates that a completely satisfactory condition exists.
FOR AIRCRAFT – Status symbols will be recorded in red.

ALL INSPECTIONS AND EQUIPMENT CONDITIONS RECORDED ON THIS FORM HAVE BEEN DETERMINED IN ACCORDANCE WITH DIAGNOSTIC PROCEDURES AND STANDARDS IN THE TM CITED HEREON.

8a. SIGNATURE (Person(s) performing inspection)	8b. TIME	9a. SIGNATURE (Maintenance Supervisor)	9b. TIME	10. MANHOURS REQUIRED
[signature]	1114 25 MAY 94	[signature]	1630	

TM ITEM NO. a	STATUS b	DEFICIENCIES AND SHORTCOMINGS c	CORRECTIVE ACTION d	INITIAL WHEN CORRECTED e
5		Bolt does not slide smooth		RL
6		Magazine spring and follower		
		do not release from magazine		
2		Blueing chipped on barrel		
2		Barrel is not free floating		
1		CAGE ES FORM		
		elevation knob doesn't		
		turn all the way		

23 AUG 94
Date

ROUTING AND TRANSMITTAL SLIP

TO: (Name, office symbol, room number, building, Agency/Post)	Initials	Date
1. Remington Arms Co		
2. ATTN: Fabricated Products		
3. Dept.		
4. (Fred Martin)		
5.		

	Action		File		Note and Return
	Approval		For Clearance		Per Conversation
X	As Requested		For Correction		Prepare Reply
	Circulate		For Your Information		See Me
	Comment		Investigate		Signature
	Coordination		Justify		

REMARKS

Per Conversation with Mr Walton, USAMC, the attached DA Form 2407 is submitted for 1 M24 Sniper Rifle Serial # C6349197.

DO NOT use this form as a RECORD of approvals, concurrences, disposals, clearances, and similar actions

FROM: (Name, org. symbol, Agency/Post)	Room No.—Bldg.
Larry Ritz	Bldg 7-4
DOL Customer Assist Sec.	Phone No. 315 772-5108

5041-102
GPO : 1990 O - 276-978

OPTIONAL FORM 41 (Rev. 7-76)
Prescribed by GSA
FPMR (41 CFR) 101-11.206

DOC IDENT	RI FROM	M&S	STOCK NUMBER (FSC / NIIN)	ADD	UNIT OF ISSUE	QUANTITY	DOCUMENT NUMBER (SERV / REQUISITIONER / DATE / SERIAL)	SUPPLEMENTARY ADDRESS	SIGNAL	FUND	DISTRIBUTION	PROJECT	PRIORITY	REQ'D DEL DATE	ADVICE	RI	UNIT PRICE (DOLLARS / CTS)
A5AAX4			1005012402136		EA	00001	N10 3E74 2200 121	REMINGMGA				MR203000		AWXMF			5145.00

SHIPPED FROM	SHIP TO	MARK FOR	PROJECT	TOTAL PRICE (DOLLARS / CTS)
CONS PROP ACCT FT DRUM FT DRUM NY 13602	~~REMING~~ Remington Arms Co Inc ATTN: [illegible] [illegible]	REMING PPL	MR2 MATCAT MJ RECEIVED 4220	5145.00

WAREHOUSE LOCATION	TYPE OF CARGO	UNIT PACK	UNIT WEIGHT	UNIT CUBE	UFC	NMFC	FREIGHT RATE		DOCUMENT	MAT COND	QUANTITY		
T0004 A 00000M	AE	001	.10	.001			LTL	4	4220 TIME 1217	F	00001	SHELF LIFE	STD 4220 CTTD 4221

SUBSTITUTE DATA (ITEM ORIGINALLY REQUESTED)

FREIGHT CLASSIFICATION NOMENCLATURE: ATTN: FRED MARLIN

ITEM NOMENCLATURE: C 6349147
RIFLE 7.62MM SNIP M24

SENSITIVE ITEM
MAJOR ITEM

SHIPPING			RECEIVING	
SELECTED BY AND DATE: Walde 4223	TYPE OF CONTAINER(S): CT	TOTAL WEIGHT: 20.0 ~~.10~~	RECEIVED BY AND DATE	INSPECTED BY AND DATE
PACKED BY AND DATE: Walde 4223 4AS306001/001	NO. OF CONTAINER(S): 1	TOTAL CUBE: 2.0 ~~.001~~	WAREHOUSED BY AND DATE: R 595 688 REG MAIL 10	WAREHOUSE LOCATION: 711

REMARKS: HC/A INSPECTION REQUIRED
SIGNATURE REQUIRED

TPI

FIRST DESTINATION ADDRESS

DATE SHIPPED: 4223 G

PKG REF MILSTD207

13 TRANSPORTATION CHARGEABLE TO

14 B/LADING, AWB, OR RECEIVER'S SIGNATURE (AND DATE)

15 RECEIVER'S DOCUMENT NUMBER: TCN W168E7 4220 0121 XXA

DD FORM 1348-1A, SEP 87 *(BLUE)* *Jun 86 edition may be used.* FORM APPROVED, OMB NO. 0704-0188 DOD SINGLE LINE ITEM RELEASE/RECEIPT DOCUMENT

EQUIPMENT INSPECTION AND MAINTENANCE WORKSHEET

For use of this form, see DA PAM 738-750 and 738-751; the proponent agency is DCSLOG

1. ORGANIZATION	2. NOMENCLATURE AND MODEL
HHC 2/87 Scouts	M-24 Sniper Weapon System

3. REGISTRATION/SERIAL/NSN	4a. MILES	b. HOURS	c. ROUNDS FIRED	d. HOT STARTS	5. DATE	6. TYPE INSPECTION
C-6349197					25 MAY 94	PMCS

7. APPLICABLE REFERENCE

TM NUMBER	TM DATE	TM NUMBER	TM DATE
9-1005-306-10	FEB 89		

COLUMN a — Enter TM item number.

COLUMN b — Enter the applicable condition status symbol.

COLUMN c — Enter deficiencies and shortcomings.

COLUMN d — Show corrective action for deficiency or shortcoming listed in Column c.

COLUMN e — Individual ascertaining completed corrective action initial in this column.

STATUS SYMBOLS

"X"—Indicates a deficiency in the equipment that places it in an inoperable status.

CIRCLED "X"—Indicates a deficiency, however, the equipment may be operated under specific limitations as directed by higher authority or as prescribed locally, until corrective action can be accomplished.

HORIZONTAL DASH "(-)"—Indicates that a required inspection, component replacement, maintenance operation check, or test flight is due but has not been accomplished, or an overdue MWO has not been accomplished.

DIAGONAL "(/)"—Indicates a materiel defect other than a deficiency which must be corrected to increase efficiency or to make the item completely serviceable.

LAST NAME INITIAL IN BLACK, BLUE-BLACK INK, OR PENCIL-Indicates that a completely satisfactory condition exists.

FOR AIRCRAFT-Status symbols will be recorded in red.

ALL INSPECTIONS AND EQUIPMENT CONDITIONS RECORDED ON THIS FORM HAVE BEEN DETERMINED IN ACCORDANCE WITH DIAGNOSTIC PROCEDURES AND STANDARDS IN THE TM CITED HEREON.

8a. SIGNATURE *(Person(s) performing inspection)*	8b. TIME	9a. SIGNATURE *(Maintenance Supervisor)*	9b. TIME	10. MANHOURS REQUIRED
[illegible]	1114 25 MAY 94	[illegible]	1130	

TM ITEM NO. a	STATUS b	DEFICIENCIES AND SHORTCOMINGS c	CORRECTIVE ACTION d	INITIAL WHEN CORRECTED e
5		Bolt does not slide smooth		RL
6		Magazine spring and follower		
		do not release from magazine		
2		Blueing chipped on barel		
2		Barrel is not free floating		
1		CASE IS TORN		
		elevation knob doesn't		
		turn all the way		

DA FORM 1 APR 79 2404 Replaces edition of 1 Jan 64, which will be used

TM ITEM NO. *a*	STATUS *b*	DEFICIENCIES AND SHORTCOMINGS *c*	CORRECTIVE ACTION *d*	INITIAL WHEN CORRECTED *e*

GPO : 1991 O - 301-856 (40140)

BARBER - M24 0109970

RECEIVING AND ESTIMATING REPORT

COMMENTS: M-24

R ORDER 98-20684

CUSTOMER ORDER NO.

SWS

DATE RECEIVED	DATE OPENED	DATE CODE	SERIAL NUMBER	NEW SERIAL NUMBER	MODEL AND GRADE
10/06/98	10/07/98	OK 7-90	C6349197		700 7.62 NATO

ACCESSORIES: W/ Swivel & Swivel Studs

FROM:

HHC 2-14 INF
ATTN COMPANY COMMANDER
N RIVA RIDGE LOOP - BLDG 10112
FORT DRUM NY 13602

SHIP TO:

HHC 2-14 INF
ATTN COMPANY COMMANDER
N RIVA RIDGE LOOP - BLDG 10112
FORT DRUM NY 13602

CUST NO:194858 C.O.D

ACCOUNT NUMBER	ACCOUNT NUMBER N/C	WRITE	PROM. DATE	ESTIMATED	VIA
		☐			UPS

GUN CONDITION
- ☐ NEW
- ☐ LIGHTLY WORN
- ☐ WORN
- ☐ VERY WORN
- ☐ UNREPAIRABLE
- ☐ MARRED

REPAIR CHARGE	
EXCISE	
TAX	
INSURANCE	
UPS	
PARCEL POST	
TOTAL	

CUSTOMER CONCERN	AMMO	FUNCTION	FINISH	ACCURACY	FIT	INSPECT
CYCLE	A1	B1				
TRIGGER GROUP		B2			E1	F1
BOLT ASSY.		B3			E2	F2
BARREL ASSY.		B4		D1	E3	F3
REC. ASSY.		B5		D2	E4	F4
WOOD			C1	D3	E5	F5
METAL			C2			

MAIN FAULT

PARTS: BARREL 96003

COMMENTS

REPAIRMAN	PROOF	CLEAN	TEST	TARGET	PATTERN
RW	✓	✓	✓	✓	
GALLERY TESTER	DATE	DATE	DATE	DATE	DATE
RW			11/13/98	11/13/98	

RD6925 REV. 7/97

HHC 2-14 INF
ATTN: COMPANY COMMANDER
BUILDING# 10112
NORTH RIVA RIDGE LOOP
FORT DRUM, NY 13602

CONFIDENTIAL-SUBJECT TO PROTECTIVE ORDER
KINZER V. REMINGTON

DOC IDENT	RI FROM	M&S	STOCK NUMBER FSC	STOCK NUMBER NIIN	ADD	UNIT OF ISSUE	QUANTITY	DOCUMENT NUMBER SERV	REQUISITIONER	DATE	SERIAL	SUFFIX	SUPPLEMENTARY ADDRESS	SIGNAL	FUND	DISTRIBUTION	PROJECT	PRIORITY	REQ'D DEL DATE	ADVICE	RI	UNIT PRICE DOLLARS	CTS
FTE			1005	01-240-2136		EA	Ø001	W	809NM	8276	0200												

SHIPPED FROM	SHIP TO	MARK FOR	PROJECT	TOTAL PRICE DOLLARS	CTS
HHC 2-14 INF Attn: CDR Bldg: ~~1010~~ 10112 North Riva Ridge Loop ~~Ft Drum, NY 13602~~	Remington Arms Co. Inc Attn: Fabricated Products Dept 14 Hoefler Avenue Ilion, NY 13357-1816		POC: CW2 Fasca DSN: 341-6239 COMM: 315-772-6239		

WAREHOUSE LOCATION	TYPE OF CARGO	UNIT PACK	UNIT WEIGHT	UNIT CUBE	UFC	NMFC	FREIGHT RATE	DOCUMENT DATE	MAT COND	QUANTITY
Gaining UIC: W31G1Y Gaining DODAAC: W31G1Z										

SUBSTITUTE DATA (ITEM ORIGINALLY REQUESTED):

FREIGHT CLASSIFICATION NOMENCLATURE: Turn-in for repair

LIN: R95387

ITEM NOMENCLATURE: Rifle 7.62MM: SNIPER M24 SN# C6349197

SHIPPED FROM SELECTED BY AND DATE	TYPE OF CONTAINER(S)	TOTAL WEIGHT	RECEIVED BY AND DATE	INSPECTED BY AND DATE
			6 Oct 98 Timothy C. Fasca, CW2 TIMOTHY C. FASCA CW2, USA PBO TM2	

PACKED BY AND DATE	NO OF CONTAINER(S)	TOTAL CUBE	WAREHOUSED BY AND DATE	WAREHOUSE LOCATION

REMARKS				

FIRST DESTINATION ADDRESS	DATE SHIPPED		

13 TRANSPORTATION CHARGEABLE TO	14 B/LADING, AWB, OR RECEIVER'S SIGNATURE (AND DATE)	15 RECEIVER'S DOCUMENT NUMBER

DD FORM 1348-1A, SEP 87 *(BLUE)* *Jun 86 edition may be used.* FORM APPROVED. OMB NO. 0704-0188 **DOD SINGLE LINE ITEM RELEASE/RECEIPT DOCUMENT**

DOC IDENT	RI FROM	M&S	STOCK NUMBER FSC	STOCK NUMBER NIIN	ADD	UNIT OF ISSUE	QUANTITY	DOCUMENT NUMBER SERV	REQUISITIONER	DATE	SERIAL	SUFFIX	SUPPLEMENTARY ADDRESS	SIGNAL	FUND	DISTRIBUTION	PROJECT	PRIORITY	REQ'D DEL DATE	ADVICE	RI	UNIT PRICE DOLLARS	CTS
AGA			1005	01-240-2136		EA	Ø001	W	809NM	8276	0201												

SHIPPED FROM	SHIP TO	MARK FOR	PROJECT	TOTAL PRICE DOLLARS	CTS
Remington Arms Co. Inc Attn: Fabricated Products Dept 14 Hoefler Avenue Ilion, NY 13357-1816					

WAREHOUSE LOCATION	TYPE OF CARGO	UNIT PACK	UNIT WEIGHT	UNIT CUBE	UFC	NMFC	FREIGHT RATE	DOCUMENT DATE	MAT COND	QUANTITY

SUBSTITUTE DATA (ITEM ORIGINALLY REQUESTED):

FREIGHT CLASSIFICATION NOMENCLATURE:

ITEM NOMENCLATURE: Rifle 7.62MM: SNIPER M24

SHIPPED FROM SELECTED BY AND DATE	TYPE OF CONTAINER(S)	TOTAL WEIGHT	RECEIVED BY AND DATE	INSPECTED BY AND DATE

PACKED BY AND DATE	NO OF CONTAINER(S)	TOTAL CUBE	WAREHOUSED BY AND DATE	WAREHOUSE LOCATION

REMARKS				

FIRST DESTINATION ADDRESS	DATE SHIPPED		

13 TRANSPORTATION CHARGEABLE TO	14 B/LADING, AWB, OR RECEIVER'S SIGNATURE (AND DATE)	15 RECEIVER'S DOCUMENT NUMBER

DD FORM 1348-1A, SEP 87 *(BLUE)* *Jun 86 edition may be used* FORM APPROVED. OMB NO. 0704-0188 **DOD SINGLE LINE ITEM RELEASE/RECEIPT DOCUMENT**

#1

EQUIPMENT INSPECTION AND MAINTENANCE WORKSHEET

For use of this form, see DA PAM 738-750 and 738-751; the proponent agency is DCSLOG

1. ORGANIZATION	2. NOMENCLATURE AND MODEL
HHC 2-14 INF Scouts	7.62mm M24 Sniper Rifle

3. REGISTRATION/SERIAL/NSN	4a. MILES	b. HOURS	c. ROUNDS FIRED	d. HOT STARTS	5. DATE	6. TYPE INSPECTION
C 6379197					04 Sept 90	PMCS

7. APPLICABLE REFERENCE

TM NUMBER	TM DATE	TM NUMBER	TM DATE
9-1005-206-10	June 89		

COLUMN a — Enter TM item number.

COLUMN b — Enter the applicable condition status symbol.

COLUMN c — Enter deficiencies and shortcomings.

COLUMN d — Show corrective action for deficiency or shortcoming listed in Column c.

COLUMN e — Individual ascertaining completed corrective action initial in this column.

STATUS SYMBOLS

"X"—Indicates a deficiency in the equipment that places it in an inoperable status.

CIRCLED "X"—Indicates a deficiency, however, the equipment may be operated under specific limitations as directed by higher authority or as prescribed locally, until corrective action can be accomplished.

HORIZONTAL DASH "(-)"—Indicates that a required inspection, component replacement, maintenance operation check, or test flight is due but has not been accomplished, or an overdue MWO has not been accomplished.

DIAGONAL "(/)"—Indicates a materiel defect other than a deficiency which must be corrected to increase efficiency or to make the item completely serviceable.

LAST NAME INITIAL IN BLACK, BLUE-BLACK INK, OR PENCIL-Indicates that a completely satisfactory condition exists.

FOR AIRCRAFT-Status symbols will be recorded in red.

ALL INSPECTIONS AND EQUIPMENT CONDITIONS RECORDED ON THIS FORM HAVE BEEN DETERMINED IN ACCORDANCE WITH DIAGNOSTIC PROCEDURES AND STANDARDS IN THE TM CITED HEREON.

8a. SIGNATURE *(Person(s) performing inspection)*	8b. TIME	9a. SIGNATURE *(Maintenance Supervisor)*	9b. TIME	10. MANHOURS REQUIRED
Dan E Rodriguez	1030			

TM ITEM NO. a	STATUS b	DEFICIENCIES AND SHORTCOMINGS c	CORRECTIVE ACTION d	INITIAL WHEN CORRECTED e
3		Front guard screw missing		
18		Broken + missing		
13		missing piece		
32		piece missing		
39		missing piece		

DA FORM 1 APR 79 2404

Replaces edition of 1 Jan 64, which will be used

TM ITEM NO. *a*	STATUS *b*	DEFICIENCIES AND SHORTCOMINGS *c*	CORRECTIVE ACTION *d*	INITIAL WHEN CORRECTED *e*

GPO : 1991 O - 287-382

CONFIDENTIAL-SUBJECT TO PROTECTIVE ORDER
KINZER V. REMINGTON

#1

WEAPON RECORD DATA

For use of this form, see DA PAMs 738-750 and 738-751; the proponent agency is DSCLOG

REQUIREMENT CONTROL SYMBOL
CSGLD—1051

1. TUBE SERIAL NO.	2. CANNON TYPE, MODEL OR SERIES	3. ORGANIZATION (UIC)	4. SPECIAL LIFE DATA
C6349197	M24 SWS	HHC 2-14	Turn In AT 10,000 Rds

5. END ITEM IDENTIFICATION	6. RDS/EFC COMPUTATION
SNIPER WEAPON M24 7.62 MM	RECEIVED FEB 95

7. CANNON SERIAL NO.	8. RETUBINGS	9. REBUSHINGS

10. Date a	Projectile Type b	Zone or Charge c	Rounds Fired d	EFC RDS Fired e	Cumulative RDS Fired f	Cumulative EFC RDS g	Remaining Life (EFC RDS) h	Remarks: Recoil Exercise (RE), Gage or Velocity Reading, Safety Inspection (SI) i	Signature j
	(Previous DA Form 2408-4 final entries)								
Feb 19 thru MAR 10 1995	7.62 Special Ball		619		619				[illegible]
Oct 1995	7.62 M80		280		899				[illegible]
MAR 1996	M118 7.62		340		1239				[illegible]
Sep 1996	M118 7.62		85		1324				[illegible]
Sep 19, 1996	M118 7.62		446		1770				[illegible]
Aug 5, 1997	M118 7.62		320		2090				Steve A. Rinkel

CONTINUE ON REVERSE

DA FORM 1 JAN 79 2408-4

EDITION OF 1 DEC 77 WILL BE USED

BARBER - M24 0109976

10.

Date *a*	Projectile Type *b*	Zone or Charge *c*	Rounds Fired *d*	EFC RDS Fired *e*	Cumulative RDS Fired *f*	Cumulative EFC RDS *g*			Remaining Life (EFC RDS) *h*	Remarks: Recoil Exercise (RE), Gage or Velocity Reading, Safety Inspection (SI) *i*	Signature *j*

NOTE: START A NEW FORM BEFORE MAILING THIS ONE

U.S. GOVERNM PRINTING OFFICE : 1988 O - 209-046

CONFIDENTIAL-SUBJECT TO PROTECTIVE ORDER
KINZER V. REMINGTON
BARBER - M24 0109976 10015

Remington Test Lab, Ilion, N.Y.

Centroidal distance calculations for Rifle # C6349197
17 Nov 1998

THE AVERAGE X-COORDINATE FOR THIS RIFLE IS: .0662
THE AVERAGE Y-COORDINATE FOR THIS RIFLE IS: -.0176
THE RESULTING AVERAGE POI RADIUS FOR THIS RIFLE IS: .0684996

THE AMR FOR THIS RIFLE IS: 1.238

CENTROIDAL DISTANCES

0	TO	1	.420488
1	TO	2	.357469
1	TO	3	.570292
1	TO	4	.972519
1	TO	5	.716369

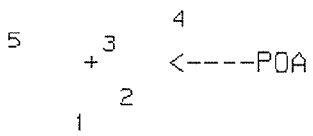

REMINGTON CENTERFIRE ACCURACY TEST REMINGTON TEST LAB, ILION, N.Y.

PATTERN #: 1

POA TO CENTROID:	.420
MIN RADIUS :	.480
MEAN RADIUS :	1.887
MAX RADIUS :	3.039
CENTROID X :	-.079
CENTROID Y :	-.413

17 Nov 1998 FILE:/Hpbasic/Accuracy/Patterning/Centerfire_Patt/C6349197

CENTERFIRE PATTERN # 1

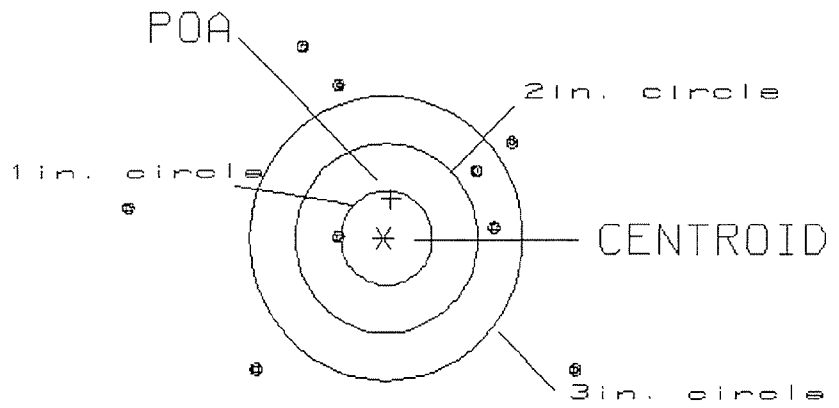

# OF SHOTS= 10	# IN CIRCLE
HS= 4.97	1
VS= 5.00	1
GS= 5.25	3

REMINGTON CENTERFIRE ACCURACY TEST REMINGTON TEST LAB, ILION, N.Y.

PATTERN #: 2

POA TO CENTROID:	.330
MIN RADIUS :	.388
MEAN RADIUS :	.963
MAX RADIUS :	1.911
CENTROID X :	.231
CENTROID Y :	-.235

17 Nov 1998 FILE:/Hpbasic/Accuracy/Patterning/Centerfire_Patt/C6349197

CENTERFIRE PATTERN # 2

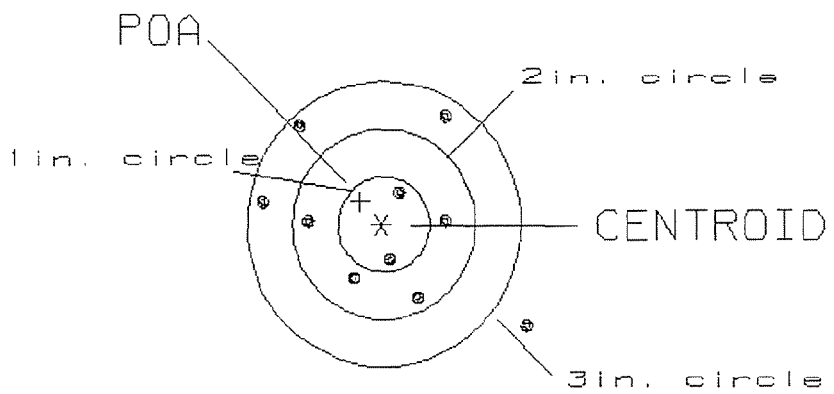

# OF SHOTS= 10	# IN CIRCLE
HS= 2.94	2
VS= 2.21	6
GS= 3.29	9

REMINGTON CENTERFIRE ACCURACY TEST REMINGTON TEST LAB, ILION, N.Y.

PATTERN #: 3

POA TO CENTROID:	.168
MIN RADIUS :	.240
MEAN RADIUS :	1.028
MAX RADIUS :	2.054
CENTROID X :	.113
CENTROID Y :	.124

17 Nov 1998 FILE:/Hpbasic/Accuracy/Patterning/Centerfire_Patt/C6349197

CENTERFIRE PATTERN # 3

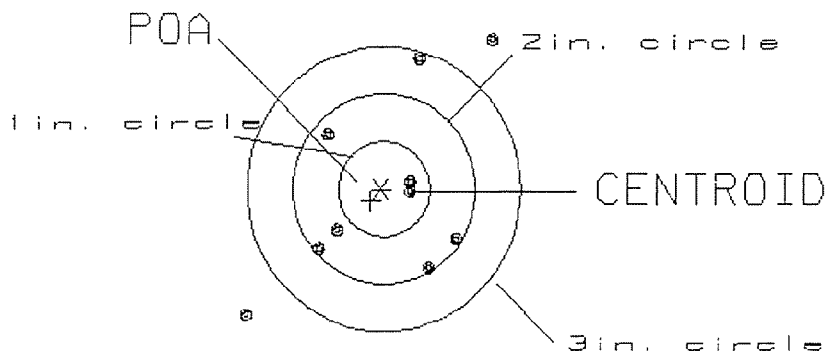

# OF SHOTS= 10	# IN CIRCLE
HS= 2.74	2
VS= 2.98	7
GS= 4.05	8

REMINGTON CENTERFIRE ACCURACY TEST REMINGTON TEST LAB, ILION, N.Y.

PATTERN #: 4

POA TO CENTROID:	.660
MIN RADIUS :	.075
MEAN RADIUS :	1.400
MAX RADIUS :	3.383
CENTROID X :	.593
CENTROID Y :	.290

17 Nov 1998 FILE:/Hpbasic/Accuracy/Patterning/Centerfire_Patt/C6349197

CENTERFIRE PATTERN # 4

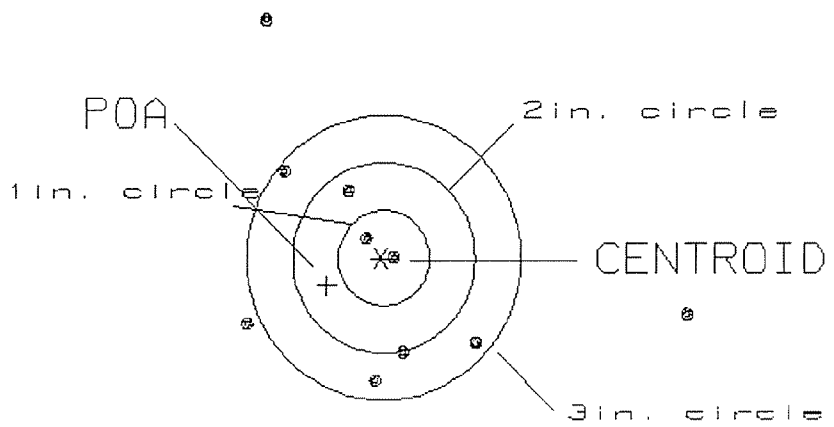

OF SHOTS= 10 # IN CIRCLE

HS= 4.79	2
VS= 3.76	3
GS= 5.56	7

REMINGTON CENTERFIRE ACCURACY TEST REMINGTON TEST LAB, ILION, N.Y.

PATTERN #: 5

POA TO CENTROID:	.547
MIN RADIUS :	.313
MEAN RADIUS :	.910
MAX RADIUS :	1.690
CENTROID X :	-.527
CENTROID Y :	.146

17 Nov 1998 FILE:/Hpbasic/Accuracy/Patterning/Centerfire_Patt/C6349197

CENTERFIRE PATTERN # 5

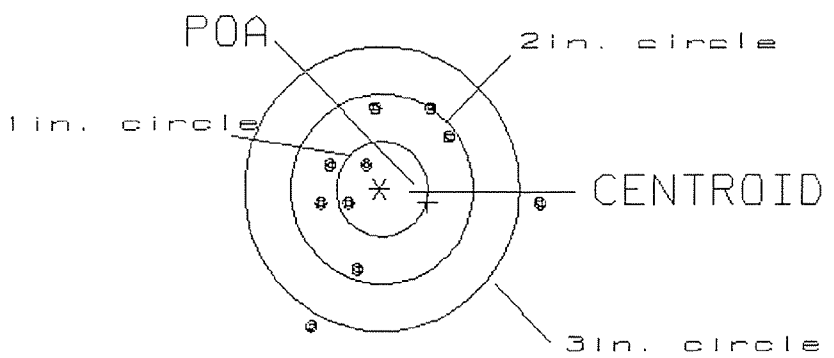

# OF SHOTS= 10	# IN CIRCLE
HS= 2.47	2
VS= 2.37	7
GS= 2.82	8

BARBER - M24 0109983

REPAIR AND ESTIMATING REPORT

COMMENTS: M-24

ORDER: R 98-20684

INITIAL	CUSTOMER ORDER NO.
SWS	

DATE RECEIVED	DATE OPENED	DATE CODE	SERIAL NUMBER	NEW SERIAL NUMBER	MODEL AND GRADE
10/06/98	10/07/98	OK 7-90	C6349197		700 7.62 NATO

ACCESSORIES: W/1 Swivel & Swivel Studs

FROM:

HHC 2-14 INF
ATTN COMPANY COMMANDER
N RIVA RIDGE LOOP - BLDG 10112
FORT DRUM NY 13602

SHIP TO:

HHC 2-14 INF
ATTN COMPANY COMMANDER
N RIVA RIDGE LOOP - BLDG 10112
FORT DRUM NY 13602

CUST NO:194858 C.O.D

ACCOUNT NUMBER	ACCOUNT NUMBER N/C	WRITE	PROM. DATE	ESTIMATED	VIA
		☐			UPS

GUN CONDITION
- ☐ NEW
- ☐ LIGHTLY WORN
- ☐ WORN
- ☐ VERY WORN
- ☐ UNREPAIRABLE
- ☐ MARRED

REPAIR CHARGE	
EXCISE	
TAX	
INSURANCE	
UPS	
PARCEL POST	
TOTAL	

CUSTOMER CONCERN	AMMO	FUNCTION	FINISH	ACCURACY	FIT	INSPECT
CYCLE	A1	B1				
TRIGGER GROUP		B2			E1	F1
BOLT ASSY.		B3			E2	F2
BARREL ASSY		B4		C1	E3	F3
REC. ASSY.		B5		D2	E4	F4
WOOD			C1	D3	F5	F5
METAL			C2			

MAIN FAULT

PARTS: BARREL 96003

COMMENTS

REPAIRMAN	PROOF	CLEAN	TEST	TARGET	PATTERN
RW	✓	✓	✓	✓	
GALLERY TESTER	DATE	DATE	DATE	DATE	DATE
RW			11/13/98	11/13/98	

OFFICE COPY

RD6923 REV. 7/97

CONFIDENTIAL-SUBJECT TO PROTECTIVE ORDER
KINZER V. REMINGTON