B-23220

THIS DRAWING OR INFORMATION IS PROPRIETARY INFORMATION TO THE REMINGTON ARMS COMPANY, INC.

DO NOT SCALE THIS DRAWING. WORK TO FIGURES UNLESS OTHERWISE NOTED.
TOLERANCES ON DECIMAL DIMENSIONS ARE:
1 PLACE (.1) — TOLERANCE ± .013
2 PLACE (.01) — TOLERANCE ± .010
3 PLACE (.001) — TOLERANCE ± .005
& ON FRACTIONAL DIMENSIONS ± 1/64
& ON ANGULAR DIMENSIONS ± 30' — 30'
FINISHES ARE DESIGNATED BY ROOT MEAN SQUARE (R.M.S.) MICRO-INCH ROUGHNESS VALUES AND ARE THE MAXIMUM ROUGHNESS ACCEPTABLE, UNLESS OTHERWISE SPECIFIED.
FINISH ROUGHNESS TO BE [illegible] OR BETTER.

RECOMMENDED MATERIAL AND HEAT TREAT
MATERIAL [illegible]
HEAT TREAT
HARDNESS
COLOR
HEAT TREAT AND COLOR TO BE DONE BY REMINGTON

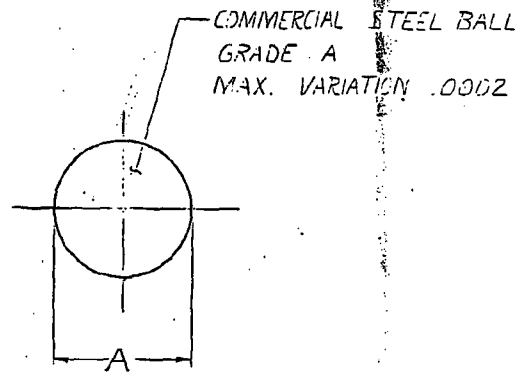

DIMENSION A	PART NO.
3/32	23220
1/8	23221
5/32	23222
9/64 (.1406)	23223
1/4	23224
3/16	23225

15 7LNT	23222	SAFETY DETENT BALL

ALTERATIONS

ALT.	WAS	REF.	BY	DATE
40	REVISED & REDRAWN	10871	RS	[illegible]
41	ADD USE 7400	10981	RF	5-11-71
42	ADD USE 7300	"	RF	5-11-71
43	ADD USE 7400	"	[illegible]	[illegible]
44	[illegible]	[illegible]	[illegible]	[illegible]
45	[illegible]	[illegible]	[illegible]	[illegible]

MODEL	PART NO.	PART USE
7300	[illegible]	[illegible] BALL
7400	[illegible]	SAFETY DETENT BALL
7400	[illegible]	SAFETY DETENT BALL
40XF 40XC	23220	SAFETY DETENT BALL
40XF 40XC	23220	SAFETY DETENT BALL
40XD 40XC	[illegible]	[illegible] BALL FRONT
742	23223	[illegible] BALL
XP10	23220	SAFETY DETENT BALL
[illegible]	23223	" " "
512	23223	" " "
552	23223	" " "
765	23223	" " "
742	23223	" " "
[illegible]66	23224	" " "
[illegible]	23224	" " "
870	23223	SAFETY DETENT BALL
1100	23223	SAFETY DETENT BALL
1100	23222	OF HANDLE DETENT BALL
700	23222	SAFETY DETENT BALL

DES. BY DATE	DRN. BY DATE	CHK. BY DATE	APP. BY DATE
	RS 6-7-77		[illegible]

TITLE: BALL

NUMBER	SCALE	SUPERSEDES	REFERENCE
B-23220	NONE	B-23220	REV 39

REMINGTON ARMS CO. INC.
ILION RESEARCH DIV.

FORM 1PB REV. 4-77 R.M.S. 10 1152