CONFIDENTIAL-SUBJECT TO PROTECTIVE ORDER
KINZER V. REMINGTON

BARBER - PRESALE R 0121443

BARBER - PRESALE R 0121443

R2522431

D-102490

THIS DRAWING OR INFORMATION IS PROPRIETARY INFORMATION TO THE REMINGTON ARMS COMPANY, INC.

1	RE DRAWN	

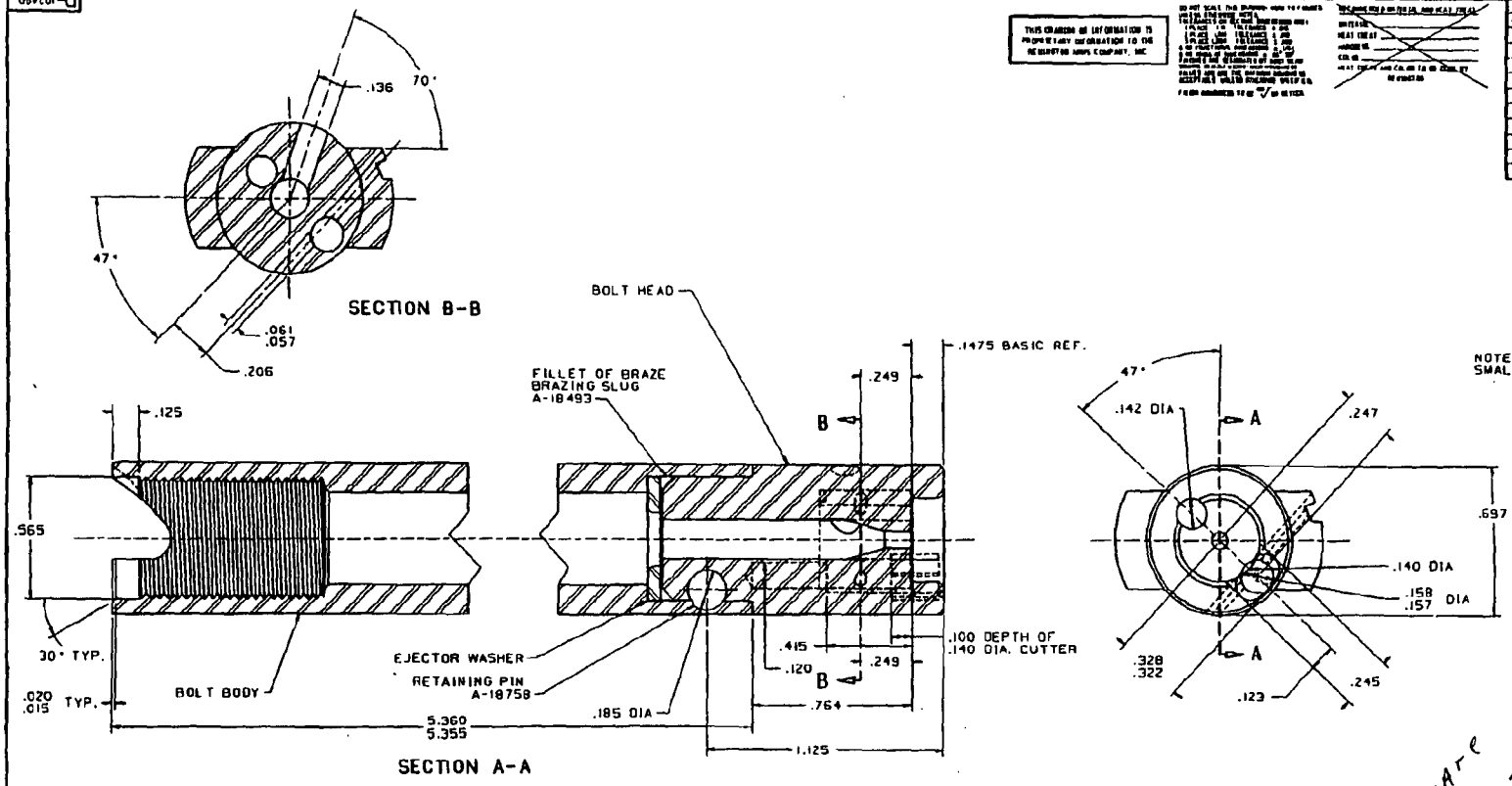

NOTE:
FOR DIMENSIONS NOT SHOWN SEE:
D-28695
C-15851 222 HEAD SIZE
C-15479 STD. HEAD SIZE
C-15706 MAG. HEAD SIZE

Update Long Ext

* DENOTES MAX BOLT HEAD

BOLT BODY ASSY		BOLT BODY	BOLT HEAD	WASHER	BOLT BODY BRAZE SLUG
.30-06 .270 WIN. .280 REM.	102490	102505	102801 *102804	17011	18493
7MM 300 WIN. MAG.	102491	102505	102802 *102805	17011	18493

102491	BOLT BODY ASSY 300 WIN MAG
102491	BOLT BODY ASSY 7MM
102490	BOLT BODY ASSY 280
102490	BOLT BODY ASSY 270
102490	BOLT BODY ASSY 30 06

BOLT BODY ASSY

D-102490

REMINGTON ARMS CO INC