C-93676

THIS DRAWING OR INFORMATION IS PROPRIETARY INFORMATION TO THE REMINGTON ARMS COMPANY, INC.

DO NOT SCALE THIS DRAWING. WORK TO FIGURES UNLESS OTHERWISE NOTED.
TOLERANCES ON DECIMAL DIMENSIONS ARE:
1 PLACE 1.0 - TOLERANCE ± .015
2 PLACE 1.00 - TOLERANCE ± .010
3 PLACE 1.000 - TOLERANCE ± .005
± ON FRACTIONAL DIMENSIONS ± 1/64
± ON ANGULAR DIMENSIONS ± 00° 30'
FINISHES ARE ESTIMATED AT 1001 MEAN SQUARE (R.M.S.) MICRO-INCH HIGHNESS VALUES AND ARE THE MAXIMUM ROUGHNESS ACCEPTABLE, UNLESS OTHERWISE SPECIFIED.
FINISH ROUGHNESS TO BE 63 OR BETTER.

RECOMMENDED MATERIAL AND HEAT TREAT
MATERIAL C-1020
HEAT TREAT
HARDNESS
COLOR BLACK OXIDE
HEAT TREAT AND COLOR TO BE DONE BY REMINGTON

ALTERATIONS

ALT.	DATE	REV.	BY	DATE

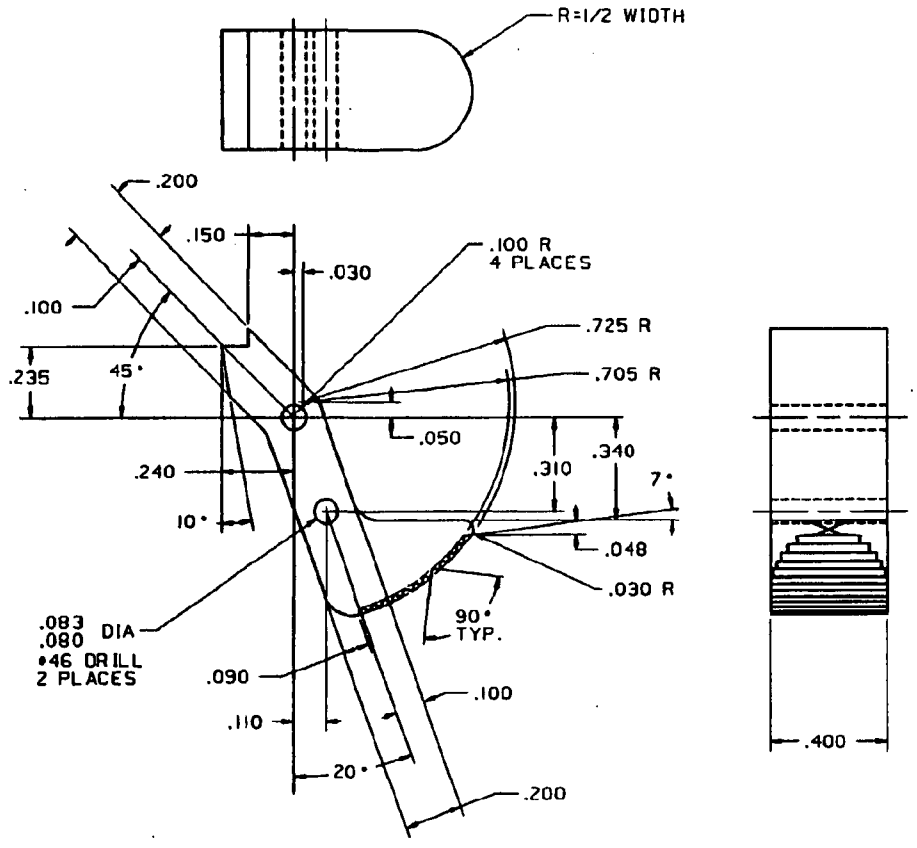

NBAR	93676	MAGAZINE RELEASE
MODEL	PART NO.	PART USE
DSN. BY DATE RSM 2-10-86	DRN. BY DATE WFP 6-5-86	CHK. BY DATE / APP. BY DATE
TITLE MAGAZINE RELEASE		
NUMBER C-93676	SCALE 4X	REMINGTON ARMS CO. INC.

CV FILENAME - REG.NBAR.MAG-RELEASE.TJP