R2522577
BARBER - PRESALE R 0121589
CONFIDENTIAL-SUBJECT TO PROTECTIVE ORDER
KINZER V. REMINGTON

DO NOT SCALE THIS DRAWING; WORK TO FIGURES

DRAWING NO. A-17049

THE REMINGTON ARMS CO. INC.
CENTRAL RESEARCH LABORATORY

SCALE 4 X SIZE

ORDER NO.

TITLE SCREW

MATERIAL Carbon Steel

H.T. SPEC. 049-064 Case

DESIGNED BY	DATE	CHECKED BY	DATE	HARDNESS
M W	2-1-44	M W	4-2-44	—
DRAWN BY	DATE	APPROVED	DATE	SURFACE TREATMENT
Hart	2-1-44	M F	4-3-44	Nitric Pickle

MODEL	PART NO.		QUAN.	SEE
721	17049	TRIG. ADJ. SCR.	2	D-17096X
[illegible]	17049	" " "	2	D-17096X
725	17049	" " "	2	RCS D-24575
[illegible]				D-24345
[illegible]				
ZC-13	17049	TRIG. ADJ. SCR.	2	

UNLESS OTHERWISE NOTED, TOLERANCES ON DECIMAL DIMENSIONS ARE ±
& ON FRACTIONAL DIMENSIONS ±

REFERENCE A 735 X

S.D.C. #160

DCR 427

ALTERATIONS			
LET.	WAS	BY	DATE
A	.100-.106	M	11-40
B	ADDED N.F.2	[illegible]	10-45
C	.315-.305	"	10-45
4	ADDED	[illegible]	3-23-46
5	.425-.415	L.R.	3-17-47
6/7	ADDED (ZZZ999)	[illegible]	1-18-54
8	ADDED	W	5/2/53
9	REMOVED M/40-Y	C.	5/19/54
10	ADDED	RCS	7-25-57
11	[illegible]	RCS	[illegible]
12	REMOVED "	"	[illegible]
13	ADDED ZC-13	RCS	7-23-[illegible]

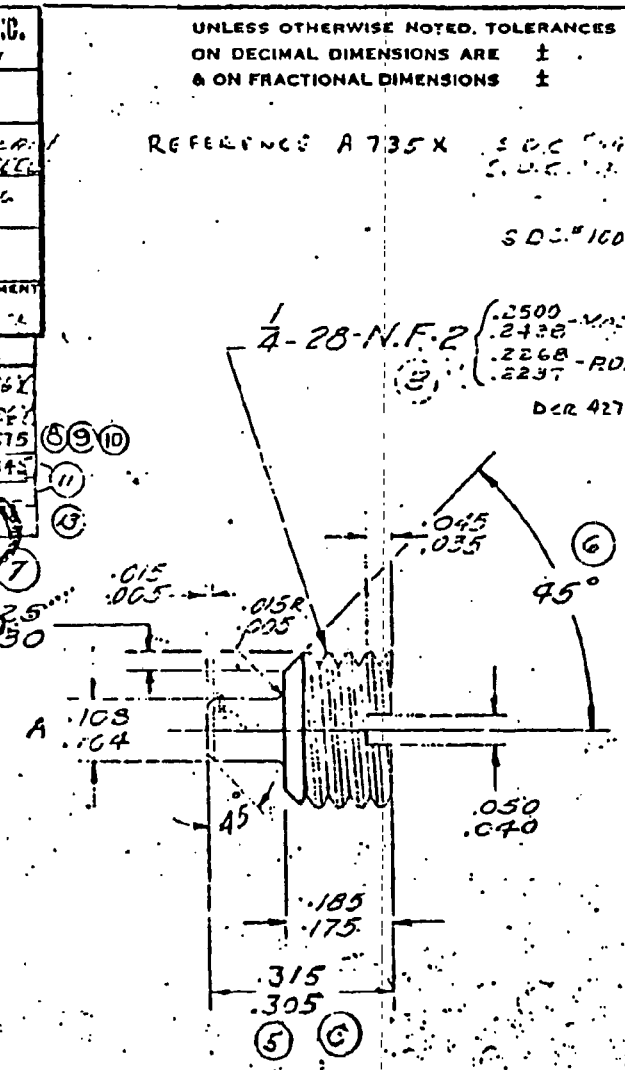

SUPERSEDED
SEE Rev 14 DATED 10-11-66

BARBER - PRESALE R 0121589

BARBER - PRESALE R 0121590

CONFIDENTIAL-SUBJECT TO PROTECTIVE ORDER
KINZER V. REMINGTON

R2522578

BARBER - PRESALE R 0121590

DO NOT SCALE THIS DRAWING; WORK TO FIGURES

DRAWING NO.	THE REMINGTON ARMS CO. INC. CENTRAL RESEARCH LABORATORY	
A-17049	SCALE 4 X SIZE	ORDER NO.
TITLE: SCREW	MATERIAL: Carbon Steel	H.T. SPEC. .002-.004 Case
DESIGNED BY: M W 2-1-44	CHECKED BY: M 4-24-42	HARDNESS: —
DRAWN BY: Hart 2-1-44	APPROVED: McD 6-26-42	SURFACE TREATMENT: Nitric Acid

MODEL	PART NO.	NAME	NUM.		SEE
721	17049	TRIG. ADJ. SCR.	2		D-17036Y
[illegible]	17049	" " "	2		D-17036Y
725	17049	" " "	2	RCS	D-24575
[illegible]	[illegible]	[illegible]	[illegible]	[illegible]	D-24345
700 ADL	[illegible]	[illegible]	2		
ZC-13	17049	TRIG. ADJ. SCR.	2		

UNLESS OTHERWISE NOTED, TOLERANCES ON DECIMAL DIMENSIONS ARE ±
& ON FRACTIONAL DIMENSIONS ±

REFERENCE A 735X S.O.C. #[illegible] S.O.C. #[illegible] S.O.C. #100

ALTERATIONS			
LET.	WAS	BY	DATE
A	.100-.106	[illegible]	[illegible]
B	ADDED N.F.E.	Br	1-6-45
C	.315-.305	"	1-6-45
4	ADDED	B	4-23-46
5	.425-.415	L.R.	3-17-47
6/7	ADDED (22299 P.C.)	[illegible]	1-18-50
8	ADDED	Mw	5/1/53
9	REMOVED M/40-Y	TC	5/19/54
10	ADDED	RCS	7-23-57
11	ADD 700 ADL; USE 700 ADL	RC	[illegible]
12	REMOVED "	"	[illegible]
13	ADDED ZC-13	[illegible]	[illegible]

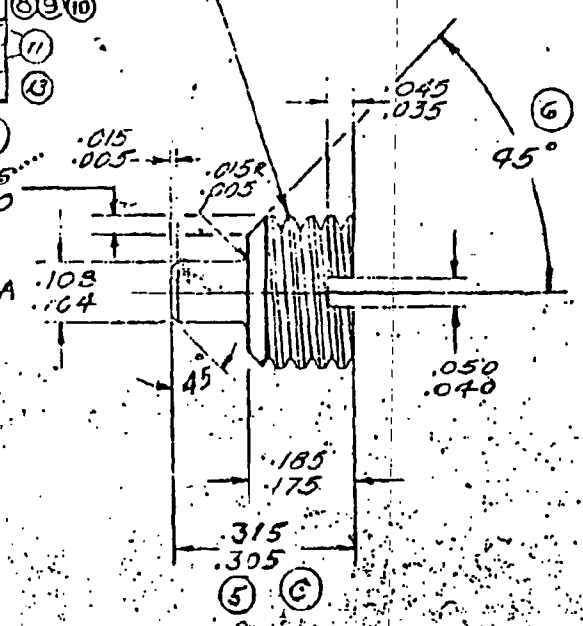

SUPERSEDED SEE Rev. 14 DATED 10-11-60

(7) (8) (9) (10) (11) (12) (13)

R. R. Hickman, Inc.