CONFIDENTIAL-SUBJECT TO PROTECTIVE ORDER
KINZER V. REMINGTON

B-14632

THIS DRAWING OR INFORMATION IS PROPRIETARY INFORMATION TO THE REMINGTON ARMS COMPANY, INC.

DO NOT SCALE THIS DRAWING; WORK TO FIGURES UNLESS OTHERWISE NOTED.
TOLERANCES ON DECIMAL DIMENSIONS ARE:
1 PLACE .0 - TOLERANCE ± .015
2 PLACE .00 - TOLERANCE ± .010
3 PLACE .000 - TOLERANCE ± .005
& ON FRACTIONAL DIMENSIONS ± 1/64
& ON ANGULAR DIMENSIONS ± 00°-30'
FINISHES ARE DESIGNATED BY ROOT MEAN SQUARE (R.M.S.) MICRO-INCH ROUGHNESS VALUES AND ARE THE MAXIMUM ROUGHNESS ACCEPTABLE, UNLESS OTHERWISE SPECIFIED.

FINISH ROUGHNESS TO BE 125 √ OR BETTER.

RECOMMENDED MATERIAL AND HEAT TREAT
MATERIAL STEEL - VENDOR SPEC.
HEAT TREAT
HARDNESS
COLOR
HEAT TREAT AND COLOR TO BE DONE BY REMINGTON

ALTERATIONS				
ALT.	WAS	REF.	BY	DATE

RIVET : AMERICAN STANDARD SMALL SOLID
TYPE : PAN HEAD
NOTE : ALL RADII ARE APPROXIMATE

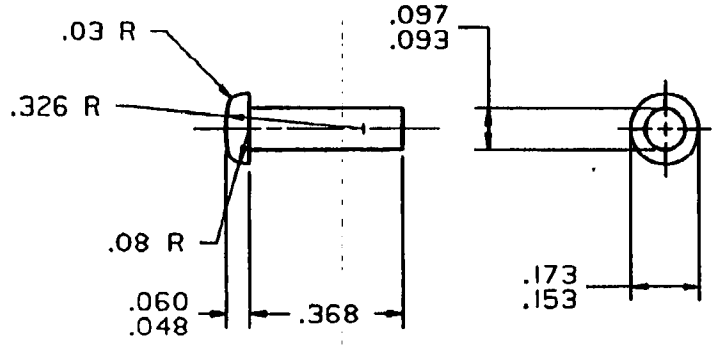

NBAR		TRIGGER HOUSING RIVET
MODEL	PART NO.	PART USE

DES. BY DATE	DRN. BY DATE	CHK. BY DATE	APP. BY DATE
	LAS 8-22-85		

TITLE RIVET

NUMBER	SCALE	SUPERSEDES	REFERENCE
B-14632	4X		

REMINGTON ARMS CO. INC.
ILION RESEARCH DIV.

CV FILENAME - REG.NBAR.RIVET