CONFIDENTIAL-SUBJECT TO PROTECTIVE ORDER
KINZER V. REMINGTON

BARBER - PRESALE R 0121680

R2522668

BARBER - PRESALE R 0121680

B-15369

RECOMMENDED MATERIAL AND HEAT TREAT

MATERIAL C-1022
HEAT TREAT See N-26590
HARDNESS
COLOR
HEAT TREAT AND COLOR TO BE DONE BY REMINGTON

DIM.	BEFORE HEAT TR.	AFTER HEAT TR.
"A"	1.2235 1.2230	1.229 1.228

(8) NOTE
USE BLANK - JB-17945

DO NOT SCALE THIS DRAWING; WORK TO FIGURES UNLESS OTHERWISE NOTED. TOLERANCES ON DECIMAL DIMENSIONS ARE ±.005 & ON FRACTIONAL DIMENSIONS ± 1/64 & ON ANGULAR DIMENSIONS ±00°-30'
FINISHES ARE DESIGNATED BY ROOT MEAN SQUARE (R.M.S.) MICRO-INCH ROUGHNESS VALUES AND ARE THE MAXIMUM ROUGHNESS ACCEPTABLE. UNLESS OTHERWISE SPECIFIED, FINISH ROUGHNESS TO BE 32 ON BETTER.

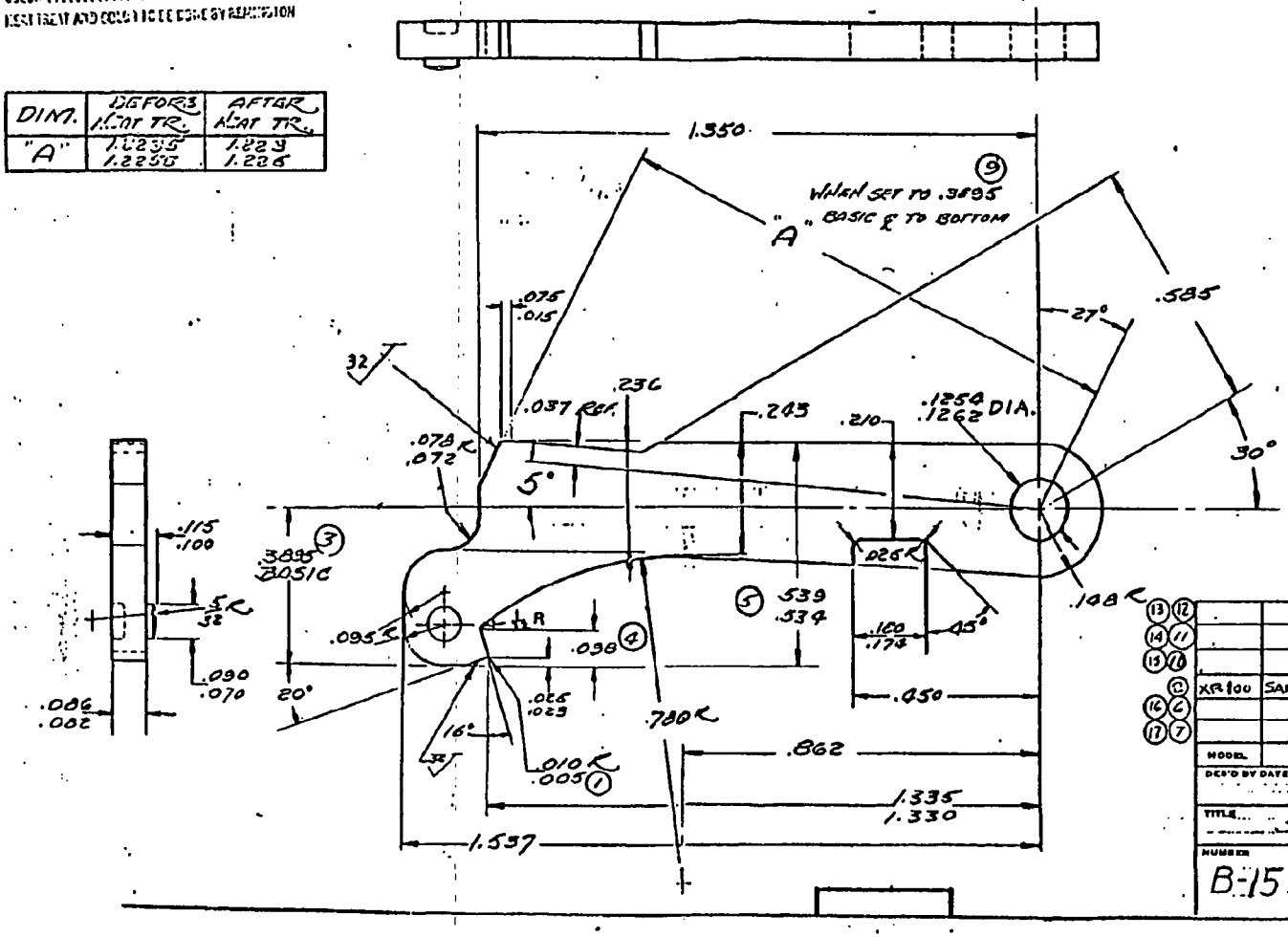

OBSOLETE
See C-15866 DAR 6633 8-29-66

ALTERATIONS

LTR.	WAS	REFERENCE	BY	DATE
1	ADDED .010 R .005	4375	RJS	11-6-61
2	ADDED	4481	"	1-9-62
3	.3815	4445	RJS	1-11-62
4	.090	"	"	"
5	.531/.526	"	"	"
6	700 ADL	"	"	"
7	700 A	"	"	"
8	ADDED	4445	"	1-25-62
9	.3815	"	"	"
10	ADDED ZC-13	4499	RJS	3/1/62
11	ADD USE 40X-B	5129	RJS	7/20/62
12	ADD USE	6479	DD	3-14-66
13	700 VAR.	6509	DD	22-[illegible]
14	40X-B	"	"	"
15	600	"	"	"
16	700 ADL	"	"	"
17	700 BDL	6509	DD	22-[illegible]

MODEL	PART USE	QUAN.	SIZE
XR100	SAFETY CAM BLANK	1	

DES'D BY DATE	DRAWN BY DATE	CHECK BY DATE	APP'D BY DATE
	RJS 6-22-61	RJS 7-7-61	7/10/61

TITLE SAFETY CAM

NUMBER B-15369 | SCALE 4X | SUPERSEDES—REFERENCE

REMINGTON ARMS CO. INC.
RESEARCH & DEV. DEPT.