BARBER - PRESALE R 0121790

B-93678

THIS DRAWING OR INFORMATION IS PROPRIETARY INFORMATION TO THE REMINGTON ARMS COMPANY, INC.

DO NOT SCALE THIS DRAWING: WORK TO FIGURES UNLESS OTHERWISE NOTED.
TOLERANCES ON DECIMAL DIMENSIONS ARE:
1 PLACE 1.0 - TOLERANCE ± .015
2 PLACE 1.00 - TOLERANCE ± .010
3 PLACE 1.000 - TOLERANCE ± .005
& ON FRACTIONAL DIMENSIONS ± 1/64
& ON ANGULAR DIMENSIONS ± 00°-30'
FINISHES ARE DESIGNATED BY ROOT MEAN SQUARE (R.M.S.) MICRO-INCH ROUGHNESS VALUES AND ARE THE MAXIMUM ROUGHNESS ACCEPTABLE, UNLESS OTHERWISE SPECIFIED.

FINISH ROUGHNESS TO BE 125 √ OR BETTER.

RECOMMENDED MATERIAL AND HEAT TREAT

MATERIAL B-1112
HEAT TREAT .008-.012 CASE
HARDNESS FILE HARD
COLOR NONE

HEAT TREAT AND COLOR TO BE DONE BY REMINGTON

ALTERATIONS

ALT.		REV.	BY	DATE

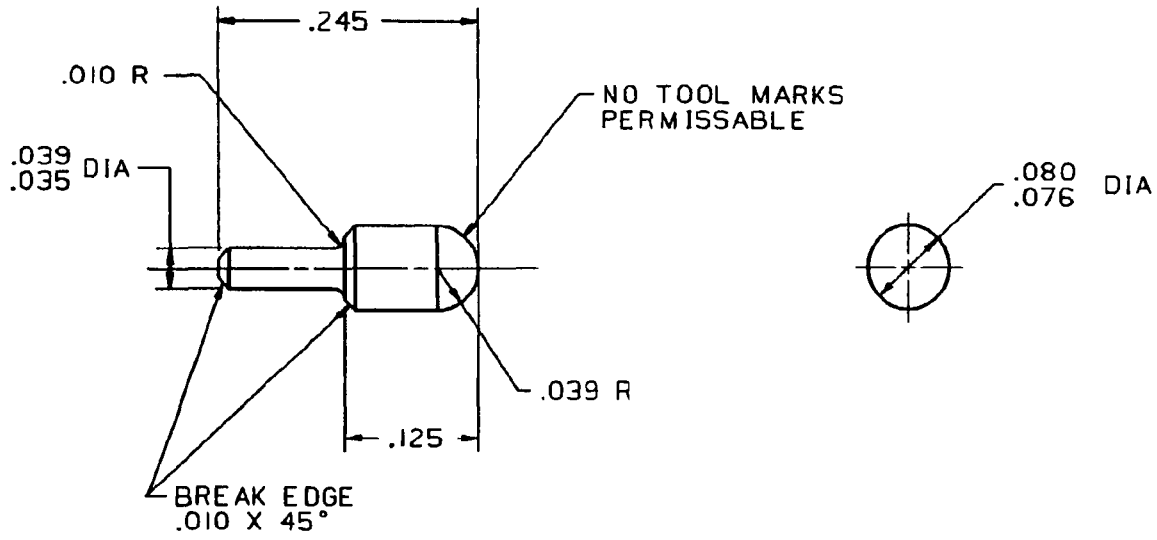

NBAR	93678	BOLT LOCK DETENT PLUNGER
MODEL	PART NO.	PART USE

DES. BY DATE	DWN. BY DATE	CHK. BY DATE	APP. BY DATE
	TJP 5-22-86	FEM 12-3-85	

TITLE PLUNGER

NUMBER	SCALE	SUPERSEDES	REFERENCE
B-93678	10/1	B-3345	

REMINGTON ARMS CO. INC.
ILION RESEARCH DIV.

CV FILENAME - REG.NBAR.BOLT-LOCK-PLUNGER.DGF

CONFIDENTIAL-SUBJECT TO PROTECTIVE ORDER
KINZER V. REMINGTON

BARBER - PRESALE R 0121790

R2522778