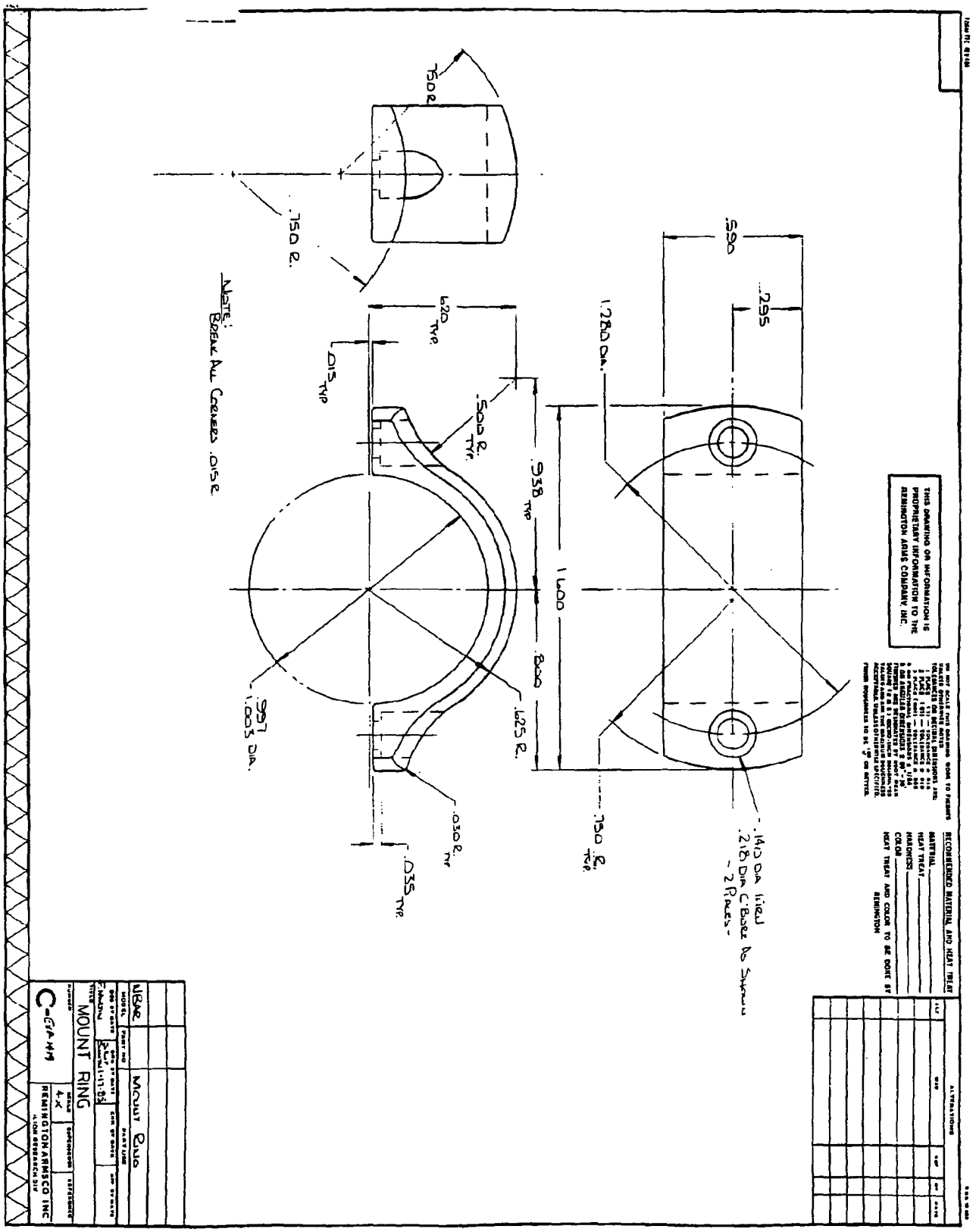

BARBER - PRESALE R 0121824