SK C-3797

THIS DRAWING OR INFORMATION IS PROPRIETARY INFORMATION TO THE REMINGTON ARMS COMPANY, INC.

DO NOT SCALE THIS DRAWING. REFER TO FIGURES UNLESS OTHERWISE NOTED.
TOLERANCES ON DECIMAL DIMENSIONS ARE:
1 PLACE (.1) - TOLERANCE ± .005
2 PLACE (.01) - TOLERANCE ± .010
3 PLACE (.001) TOLERANCE ± .005
& ON FRACTIONAL DIMENSIONS ± 1/64
& ON ANGULAR DIMENSIONS ± 00° 30'
FINISHES ARE DESIGNATED BY ROUGHNESS VALUES AND ARE THE MAXIMUM ROUGHNESS ACCEPTABLE, UNLESS OTHERWISE SPECIFIED.
FINISH ROUGHNESS TO BE 125√ OR BETTER.

RECOMMENDED MATERIAL AND HEAT TREAT
MATERIAL E-8620
HEAT TREAT NORM. TEMPER
HARDNESS B 40 N 61-69
COLOR NONE
HEAT TREAT AND COLOR TO BE DONE BY REMINGTON

ALTERATIONS

ALT	DESC	REF.	BY	DATE

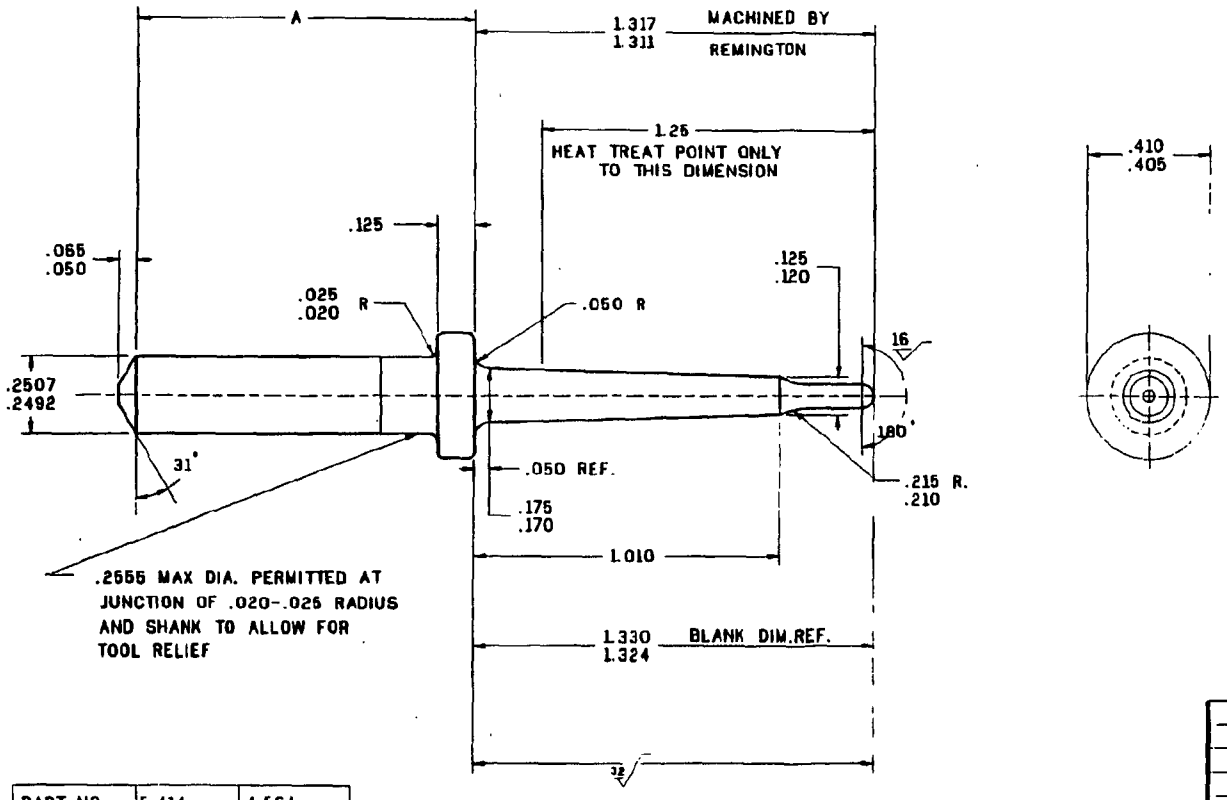

PART NO.	5.414	4.564
DIM. A	5.408	4.558

NOTE:

MAX. ECCENTRICITY OF POINT AND SHANK .003 (.006 T.I.R.)

MAX. ECCENTRICITY OF .410T.405 DIA. AND OSHANK 0.003.(.006 T.I.R.)

NBAR

MODEL | PART NO | PART USE

DES. BY DATE R.S.W. 8-27-83 | DWN BY DATE R.J.D. 10-20-84 | CHK BY DATE | APP. BY DATE

TITLE FIRING-PIN

SCALE 4X | APPROVED | REFERENCE

SK C-3797

REMINGTON ARMS CO. INC
RESEARCH DIV