C-93653

THIS DRAWING OR INFORMATION IS PROPRIETARY INFORMATION TO THE REMINGTON ARMS COMPANY, INC.

DO NOT SCALE THIS DRAWING: WORK TO FIGURES UNLESS OTHERWISE NOTED.
TOLERANCES ON DECIMAL DIMENSIONS ARE:
1 PLACE (.X) - TOLERANCE ± .015
2 PLACE (.XX) - TOLERANCE ± .010
3 PLACE (.XXX) - TOLERANCE ± .005
& ON FRACTIONAL DIMENSIONS ± 1/64
& ON ANGULAR DIMENSIONS ± 60'-20'
FINISHES ARE DESIGNATED BY ROOT MEAN SQUARE (R.M.S.) MICRO-INCH ROUGHNESS VALUES AND ARE THE MAXIMUM ROUGHNESS ACCEPTABLE, UNLESS OTHERWISE SPECIFIED.
FINISH ROUGHNESS TO BE 63 √ OR BETTER.

RECOMMENDED MATERIAL AND HEAT TREAT
MATERIAL STEEL-VENDORS SPEC
HEAT TREAT
HARDNESS
COLOR BLACK OXIDE
HEAT TREAT AND COLOR TO BE DONE BY REMINGTON

ALTERATIONS

ALT.		REV.	BY	DATE

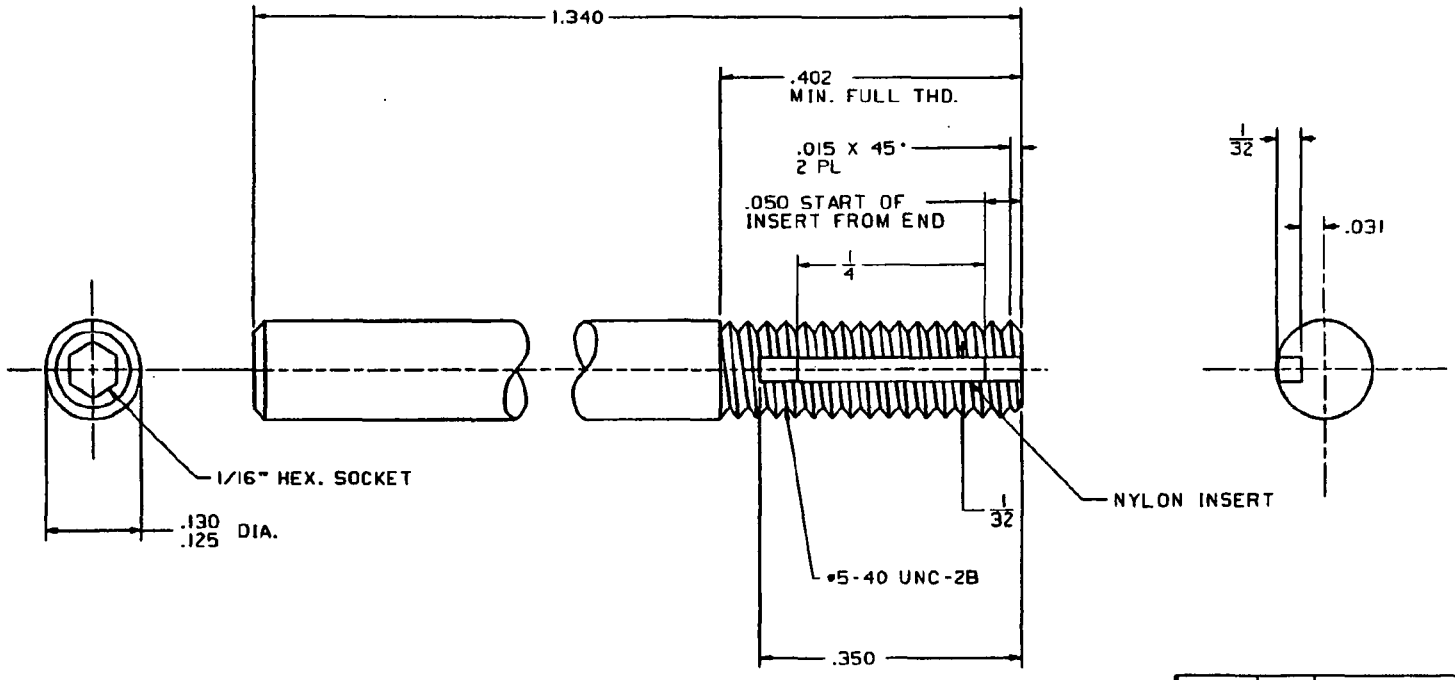

NBAR	93653	TRIG PULL ADJ. SCREW
MODEL	PART NO.	PART USE
DRN. BY DATE	CHK. BY DATE MC 8-21-85	ENG. BY DATE FEW 3-13-86 / APP. BY DATE

TITLE SCREW

C-93653

SCALE 10/1 — REMINGTON ARMS CO. INC.

CV FILENAME - REG.NBAR.TRIG-PULL-ADJ-SCREW