C-93671

NOTES:

1. FOR BLANK DRAWING SEE

THIS DRAWING OR INFORMATION IS PROPRIETARY INFORMATION TO THE REMINGTON ARMS COMPANY, INC.

DO NOT SCALE THIS DRAWING. WORK TO FIGURES UNLESS OTHERWISE NOTED.
TOLERANCES ON DECIMAL DIMENSIONS ARE:
1 PLACE .X ± .030
2 PLACE .XX ± .010
3 PLACE .XXX ± .005
ALL FUNCTIONAL DIMENSIONS ± .005
ALL ANGULAR DIMENSIONS ± 30' ± 30'
FINISHES ARE DESIGNATED BY BOLT HEAD MARKS. MARK MEANS EACH INDICATED SURFACE MUST MEET THE MINIMUM ROUGHNESS ACCEPTABLE. VALUES OTHERWISE SPECIFIED.
FINISH ROUGHNESS TO BE 63 √ OR BETTER.

RECOMMENDED MATERIAL AND HEAT TREAT
MATERIAL 8620 - 8620
HEAT TREAT CYANIDE
HARDNESS
COLOR BLACK
HEAT TREAT AND COLOR TO BE DONE BY REMINGTON

ALTERATIONS

ALT.	DESC.	REF.	BY	DATE
			MC	9-3-85

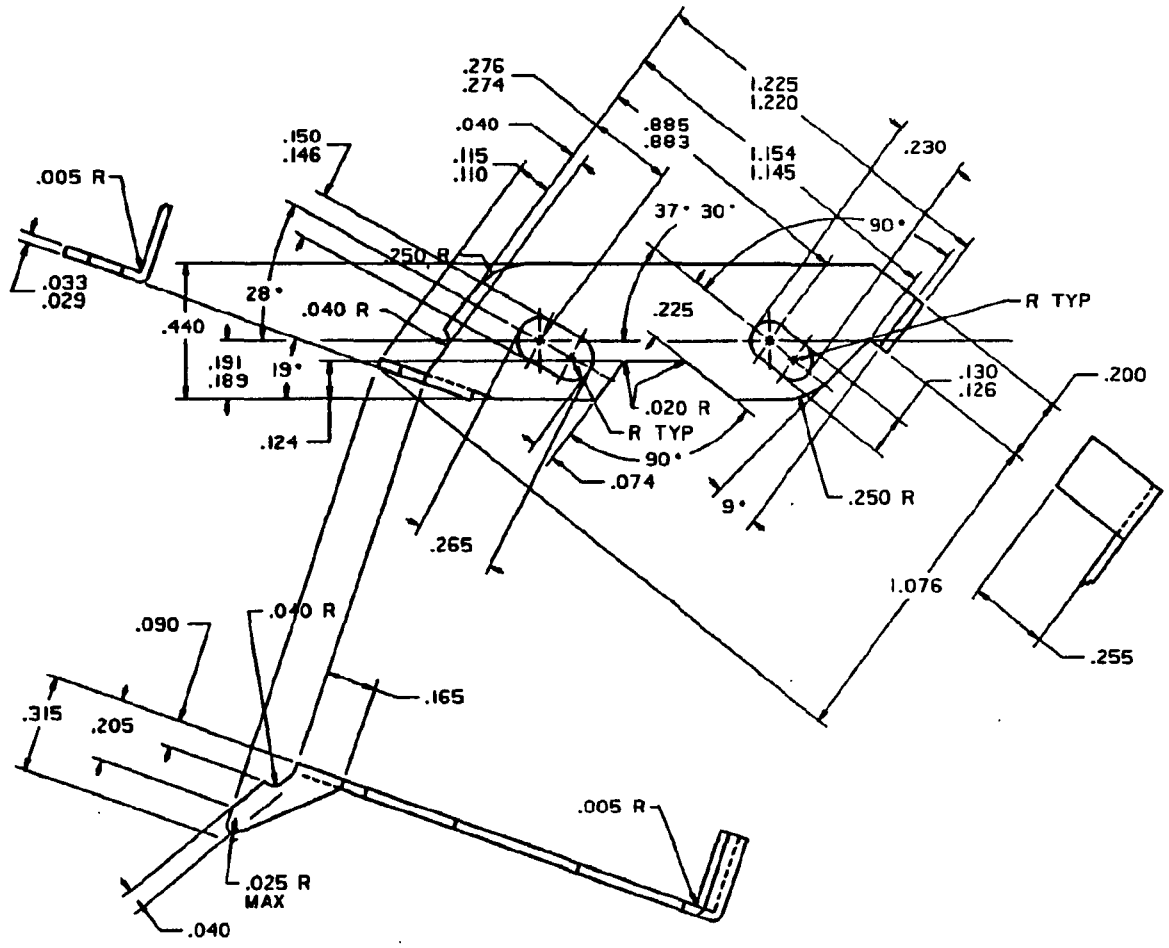

NBAR	93671	BOLT STOP RELEASE

MC 9-3-85 M 1-15-86

TITLE BOLT STOP RELEASE

C-93671 | SCALE 4/1 | REMINGTON ARMS CO. INC.

CY FILENAME - REG. ATY.NBAR-BOLT-STOP-RELEASE