C-93699

THIS DRAWING OR INFORMATION IS PROPRIETARY INFORMATION TO THE REMINGTON ARMS COMPANY, INC.

DO NOT SCALE THIS DRAWING; WORK TO FIGURES UNLESS OTHERWISE NOTED.
TOLERANCES ON DECIMAL DIMENSIONS ARE:
1 PLACE .X ± TOLERANCE ± .010
2 PLACE .XX ± TOLERANCE ± .005
3 PLACE .XXX ± TOLERANCE ± .000
ON FRACTIONAL DIMENSIONS ± 1/64
ON ANGULAR DIMENSIONS ± 30' - 30'
FILLETS ARE ESTIMATED AT BEST BLAN DRAWN. ALL FILLETS, MISMATCHES VALUES ARE THE MAXIMUM DIMENSIONS ACCEPTABLE. UNLESS OTHERWISE SPECIFIED.
FINISH DIMENSIONS TO BE 63 OR BETTER.

RECOMMENDED MATERIAL AND HEAT TREAT
MATERIAL C-[illegible]
HEAT TREAT [illegible]
HARDNESS [illegible]
COLOR [illegible]
HEAT TREAT AND COLOR TO BE DONE BY REMINGTON

ALTERATIONS

A.V.	DESC.	REV.	BY	DATE
A	REVISE VIEW PICTORIAL		EAR	6-27-[illegible]

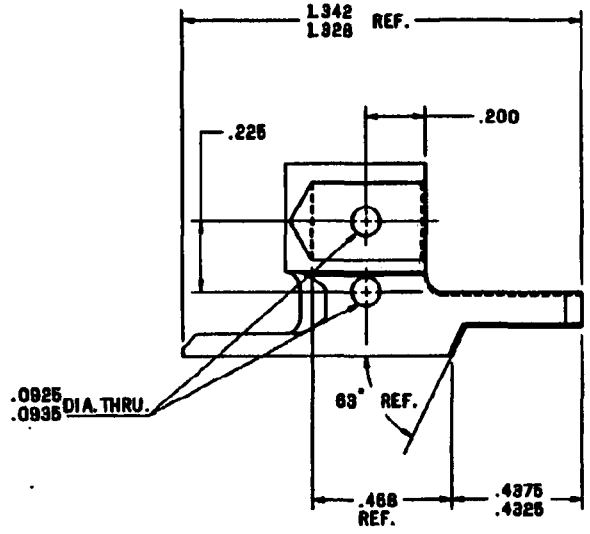

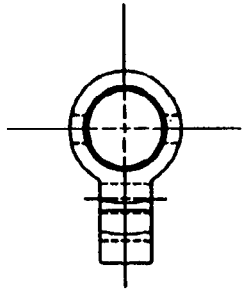

NOTE:
BREAK EDGES .015-.005
FOR BLANK DWG. SEE C-93698

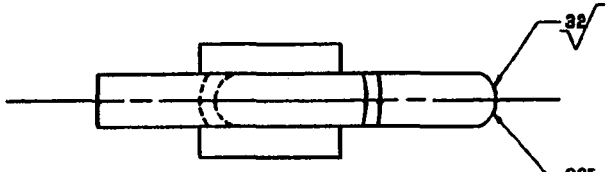

CENTRAL WITH .172/.168 DIM.
WITHIN ±.0025

NBAR	93699	FIRING PIN HEAD
MODEL	PART NO.	PART USE

DEL. BY DATE F.H.A. 12-18-78 | DEL. BY DATE B.J.H. 4-4-85 | DEL. BY DATE FEB 3-13-86 | APP. BY DATE

TITLE FIRING PINHEAD

DRAWING C-93699 | SCALE 2X | DRAWING SUPERV. | REMINGTON ARMS CO. INC.

CV FILENAME - NEW NBAR FIRING-PINHEAD