C-93726

THIS DRAWING OR INFORMATION IS PROPRIETARY INFORMATION TO THE REMINGTON ARMS COMPANY, INC.

DO NOT SCALE THIS DRAWING: WORK TO FIGURES UNLESS OTHERWISE NOTED.
TOLERANCES ON DECIMAL DIMENSIONS ARE:
1 PLACE .X ± TOLERANCE ± .XX
2 PLACE .XX ± TOLERANCE ± .XXX
3 PLACE .XXX ± TOLERANCE ± .XXXX
ON FRACTIONAL DIMENSIONS ± 1/64
ON ANGULAR DIMENSIONS ± 30' - 30'
FINISH DIMENSIONS TO BE DETERMINED BY SUM OF MEAN VALUES (L.S.L.) MINUS (LSM) DIMENSIONS VALUES AND ARE THE MAXIMUM DIMENSIONS ACCEPTABLE, UNLESS OTHERWISE SPECIFIED.
FINISH DIMENSIONS TO BE $\sqrt{}$ OR BETTER.

RECOMMENDED MATERIAL AND HEAT TREAT
MATERIAL INJECTALLOY IRON-2% NICKEL
HEAT TREAT
HARDNESS
COLOR BLACK OXIDE
HEAT TREAT AND COLOR TO BE DONE BY REMINGTON

ALTERATIONS

A.F.		REV.	BY	DATE

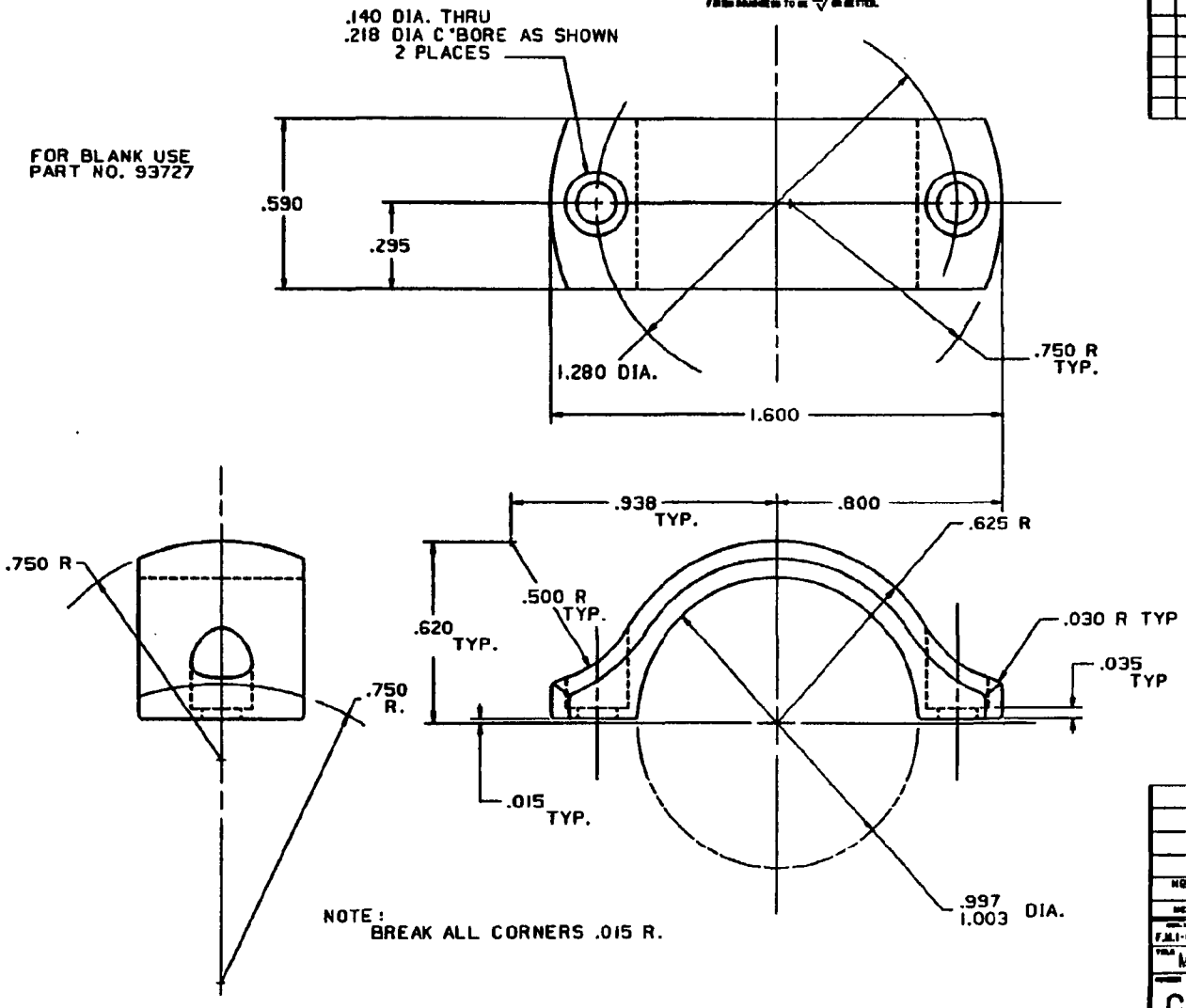

NBAR	93726	MOUNT RING
MODEL	PART NO.	PART NAME
F.J.L 1-17-85	R.J.J 3-11-85	

TITLE MOUNT RING

C-93726 | SCALE 4X | REMINGTON ARMS CO. INC. ILION RESEARCH DIV.

CV FILENAME - DES.NBAR.SCOPE-MOUNT-RING