THIS DRAWING OR INFORMATION IS PROPRIETARY INFORMATION TO THE REMINGTON ARMS COMPANY, INC.

DO NOT SCALE THIS DRAWING; USE TO FIGURES UNLESS OTHERWISE NOTED.
TOLERANCES ON DECIMAL DIMENSIONS ARE:
1 PLACE (.1) — TOLERANCE ± .010
2 PLACE (.01) — TOLERANCE ± .010
3 PLACE (.001) — TOLERANCE ± .005
& ON FRACTIONAL DIMENSIONS ± 1/64
& ON ANGULAR DIMENSIONS ± 00° - 30'
FINISHES AND DEMARKS OF MOST SMALL SQUARE (1 X 1) INCH-INCH MINIMUM 125 VALUES LOG ARE THE MAXIMUM ROUGHNESS ACCEPTABLE, UNLESS OTHERWISE SPECIFIED.
FINISH ROUGHNESS TO BE $^{125}_{0}$ OR BETTER.

RECOMMENDED MATERIAL AND HEAT TREAT
MATERIAL C-1035
HEAT TREAT
HARDNESS
COLOR
HEAT TREAT AND COLOR TO BE DONE BY REMINGTON

ALTERATIONS				
ALT	WAS	ADD	BY	DATE

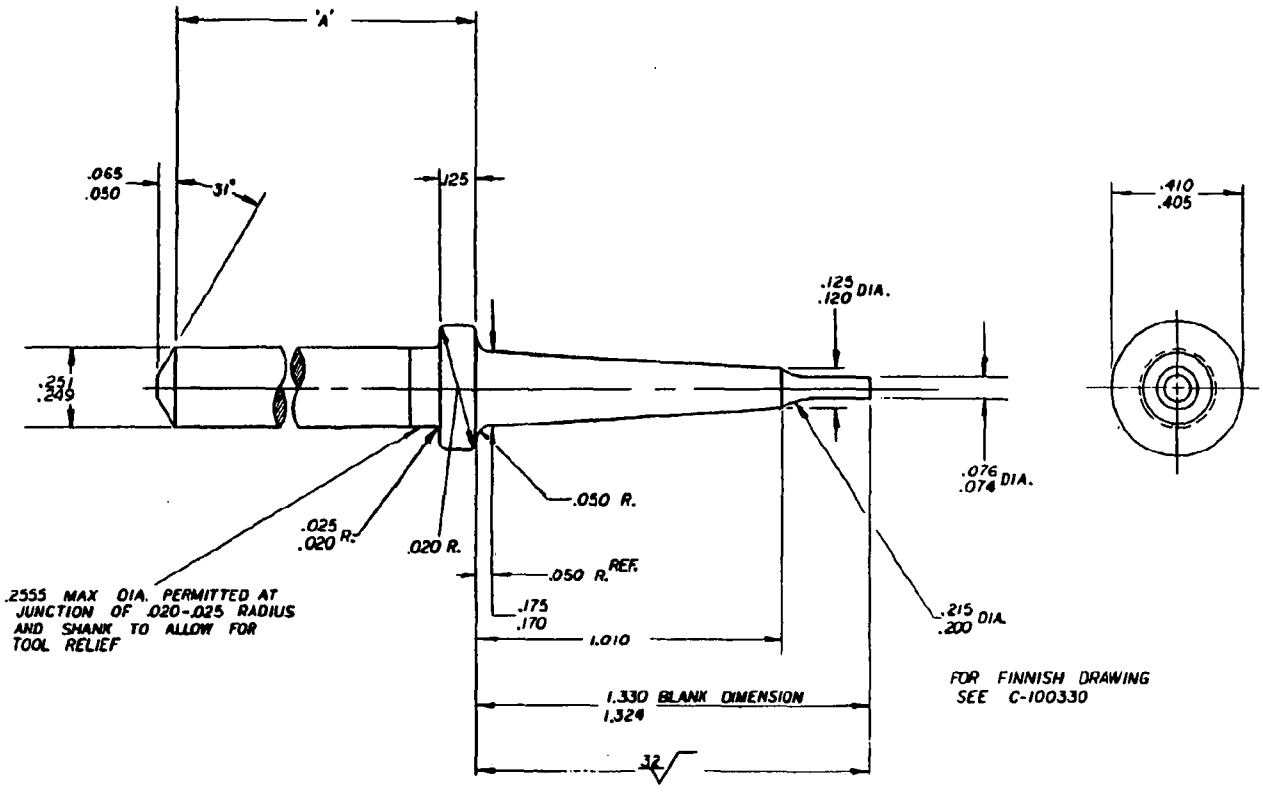

FOR FINNISH DRAWING SEE C-100330

PART NO.	100336	100335
DIM. 'A'	5.314 5.308	4.664 4.658

NOTE:
MAX. ECCENTRICITY OF POINT AND SHANK .003 (.006 T.I.R.)
MAX. ECCENTRICITY OF .410-.405 DIA. AND SHANK .003 (.006 T.I.R.)

700LW		FIRING PIN BLANK
MODEL	PART NO	PART VIN
DRN BY DATE	DSN BY DATE RSH 6-3-83	CHK BY DATE JH 6-1-83	APP BY DATE
TITLE FIRING PIN BLANK		
NUMBER C-100335	SCALE 4:1	SUPERSEDES	REFERENCE
REMINGTON ARMS CO INC FALCON RESEARCH DIV		