C-102796

THIS DRAWING OR INFORMATION IS PROPRIETARY INFORMATION TO THE REMINGTON ARMS COMPANY, INC.

DO NOT SCALE THIS DRAWING; WORK TO FIGURES UNLESS OTHERWISE NOTED.
TOLERANCES ON DECIMAL DIMENSIONS ARE:
1 PLACE LD - TOLERANCE ± .005
2 PLACE LDD - TOLERANCE ± .005
3 PLACE LDDD - TOLERANCE ± .005
ON FRACTIONAL DIMENSIONS ± 1/64
ON ANGULAR DIMENSIONS ± 0°-30'
FILLETS AND DEPRESSIONS ARE ESTIMATED BY EYE WEAR SURFACE ROUGH MICRO-INCH ROUGHNESS VALUES ARE THE MAXIMUM ROUGHNESS ACCEPTABLE, UNLESS OTHERWISE SPECIFIED.
FINISH ROUGHNESS TO BE 32 √ OR BETTER.

RECOMMENDED MATERIAL AND HEAT TREAT
MATERIAL _____
HEAT TREAT _____
HARDNESS _____
COLOR _____
HEAT TREAT AND COLOR TO BE DONE BY REMINGTON

ALTERATIONS

ALT.	NOTE	REF.	BY	DATE

PART NO.	102795 LONG ACTION	102796 SHORT ACTION
A	5.562 5.568	4.712 4.718

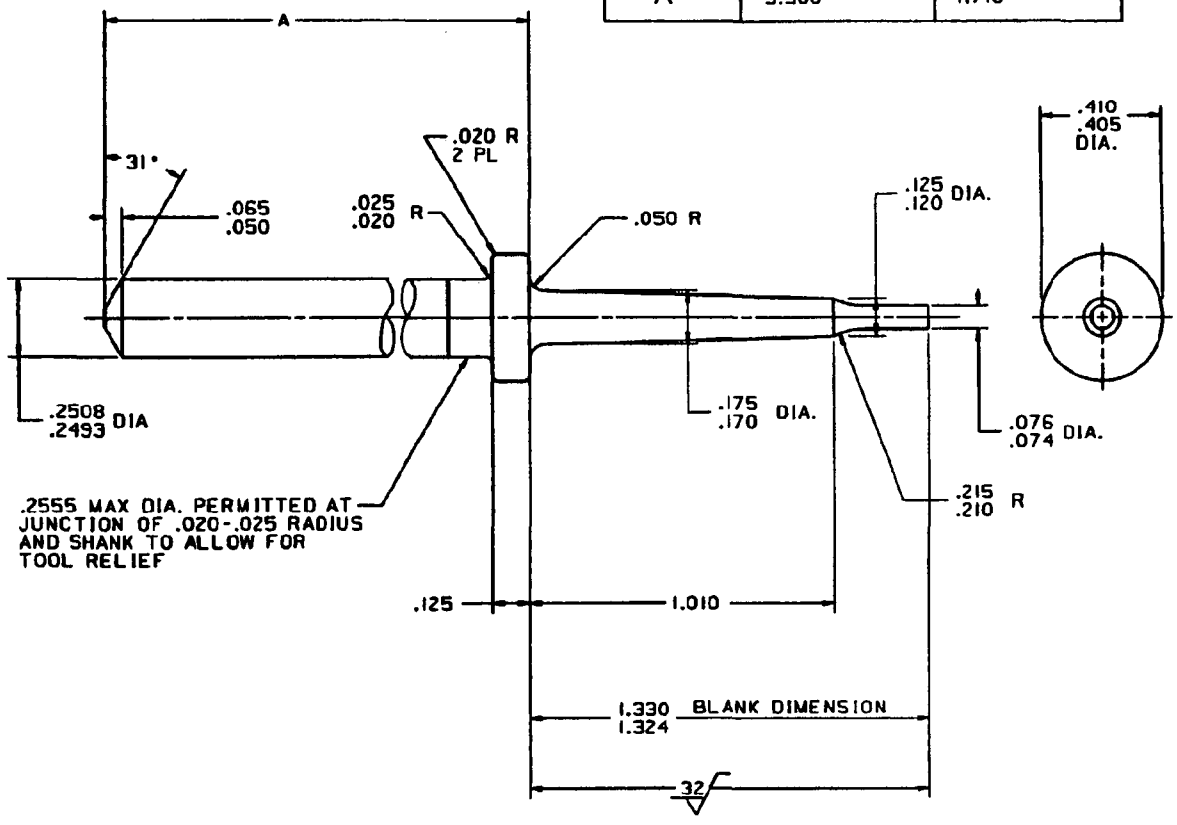

NOTE:
MAX. ECCENTRICITY OF POINT AND SHANK .003 (.006 T.I.R.)
MAX. ECCENTRICITY OF .410-.405 DIA. AND SHANK .003 (.006 T.I.R.)
FOR FINISH DRAWING SEE C-102520

MODEL	PART NO.	PART USE
NBAR	102796	FIRING PIN BLANK-SHORT ACTION
NBAR	102795	FIRING PIN BLANK-LONG ACTION

DRN. BY DATE B.AB-5-84 | CHK. BY DATE FEW 3-13-86

TITLE FIRING PIN BLANK

NUMBER C-102795 | SCALE 4X | REMINGTON ARMS CO. INC. ILION RESEARCH DIV.

CV FILENAME - RES.NBAR.FIRING-PIN-LA