C-102925

THIS DRAWING OR INFORMATION IS PROPRIETARY INFORMATION TO THE REMINGTON ARMS COMPANY, INC.

DO NOT SCALE THIS DRAWING: WORK TO FIGURES UNLESS OTHERWISE NOTED.
TOLERANCES ON DECIMAL DIMENSIONS ARE:
1 PLACE LOW - TOLERANCE ± .005
2 PLACE LOW - TOLERANCE ± .005
3 PLACE LOW - TOLERANCE ± .005
& ON FRACTIONAL DIMENSIONS ± 1/64
& ON ANGULAR DIMENSIONS ± 00°-30'
FINISHES ARE DESIGNATED BY ROOT MEAN SQUARE (R.M.S.) MICRO-INCH ROUGHNESS VALUES AND ARE THE MAXIMUM ROUGHNESS ACCEPTABLE, UNLESS OTHERWISE SPECIFIED.
FINISH ROUGHNESS TO BE 63 OR BETTER.

RECOMMENDED MATERIAL AND HEAT TREAT
MATERIAL 1215 HIGHRS SPEC.
HEAT TREAT CASE HARDEN .005" MIN.
HARDNESS FALE HARD RW 88-92
COLOR NITRE BLACK
HEAT TREAT AND COLOR TO BE DONE BY REMINGTON

ALTERATIONS

ALT.	NOTE	REV.	BY	DATE

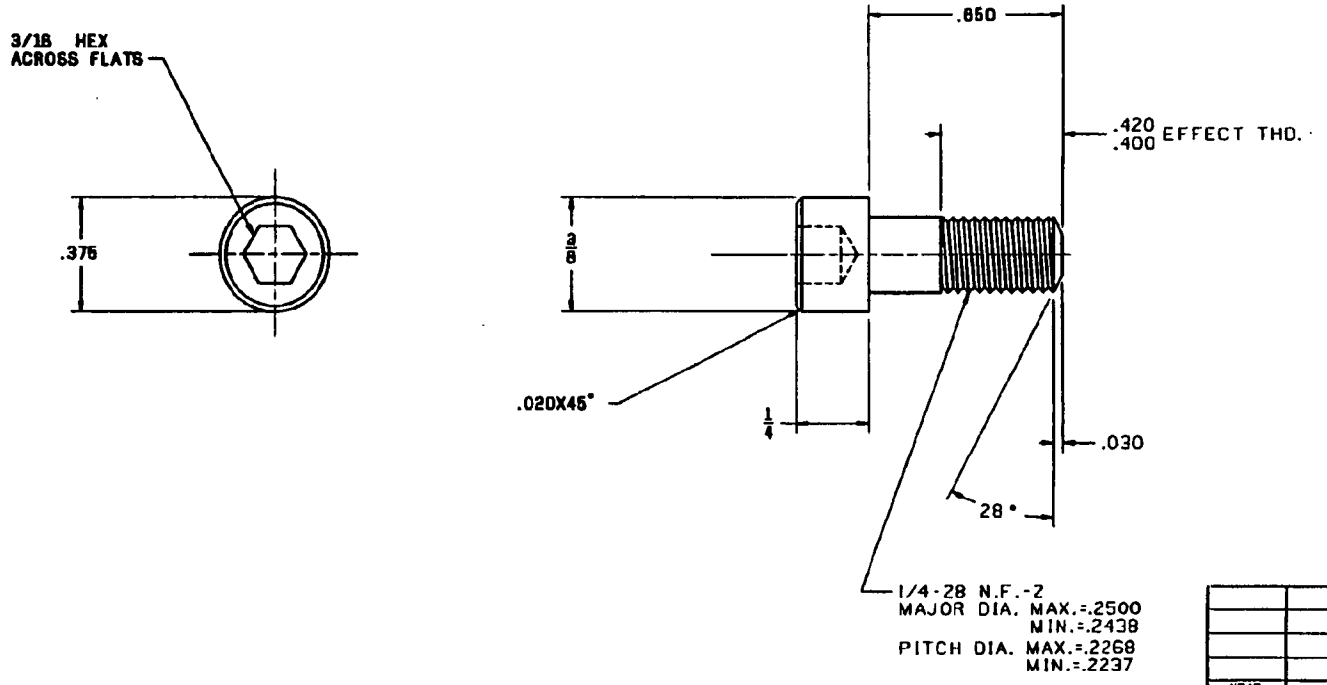

FOR BLANK DRAWING
SEE C-28810

NBAR		GUARD SCREW
MODEL	PART NO.	PART NAME
	RAW 6-25-86	

TITLE GUARD SCREW

C-102925	SCALE 4X	A-22035

REMINGTON ARMS CO. INC.
ILION RESEARCH DIV.

CV FILENAME · REG.NBAR.GUARD-SCREW