D-1461

NOTES:

1. ALLOWABLE ECCENTRICITY OF BORE WITH O.D. AT MUZZLE: .005 (.010 INDICATOR READING).
2. ALIGNMENT OF THREADS MUST BE HELD SO THAT AN INDICATOR READING AT 10" FROM THE MUZZLE, WHEN THE BARREL IS THREADED INTO A ROTATING BUSHING OF ZERO RUNOUT, IS LESS THAN .040 .
3. MAX. OUT OF ROUNDNESS OF CHAMBER .0003
   MAX. ECCENTRICITY OF BORE WITH CHAMBER .001
   MAX. ECCENTRICITY OF THREAD WITH CHAMBER .004
4. SHOULDER MUST BE SQUARE WITH BORE OVER 95° OF BEARING SURFACE WITHIN .0003 .

TABLE I

PART NO.	CALIBER	CHAMBER DWG.
NBAR	308 WIN	LB-540
NBAR	243 WIN	LA-165
NBAR	6MM REM	LA-505
NBAR	223 REM	LA-507
NBAR	22-250 REM	LA-508
NBAR	222 REM	LA-205

THIS DRAWING OR INFORMATION IS PROPRIETARY INFORMATION TO THE REMINGTON ARMS COMPANY, INC.

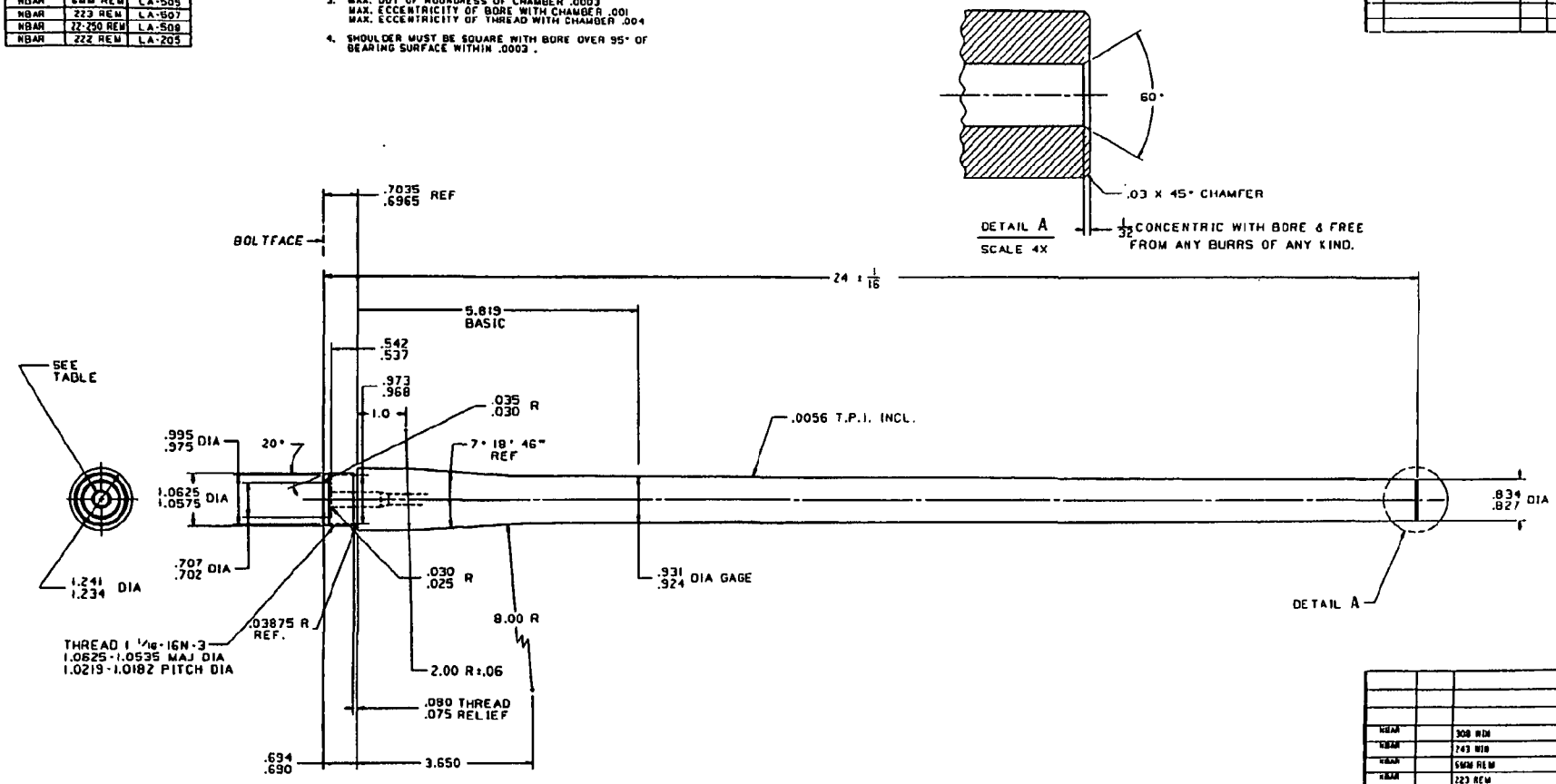

NBAR	308 WIN
NBAR	243 WIN
NBAR	6MM REM
NBAR	223 REM
NBAR	22-250 REM
NBAR	222 REM

BARREL, VARMINT

D-1465

FULL

REMINGTON ARMS CO INC

EXP