D-1482

NOTES:
1. SURFACE FINISH TO BE 32 OR BETTER.

THIS DRAWING OR INFORMATION IS PROPRIETARY INFORMATION TO THE REMINGTON ARMS COMPANY, INC.

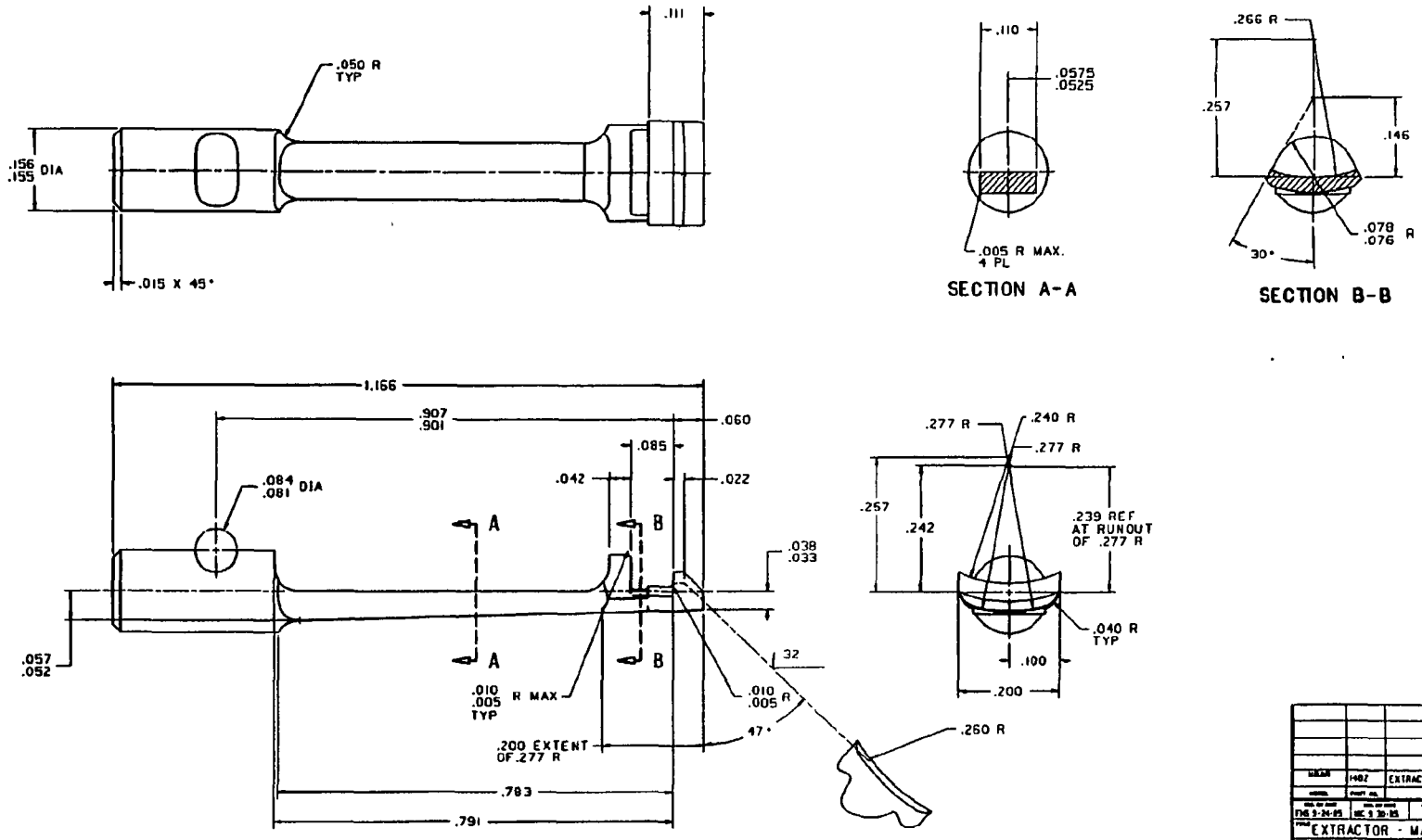

	1482	EXTRACTOR - MAG
FMS 3-24-95	MC 3-30-95	
EXTRACTOR - MAG		
EXP	D-1482	REMINGTON ARMS CO INC