CONFIDENTIAL-SUBJECT TO PROTECTIVE ORDER
KINZER V. REMINGTON

BARBER - PRESALE R 0122004

R2522992

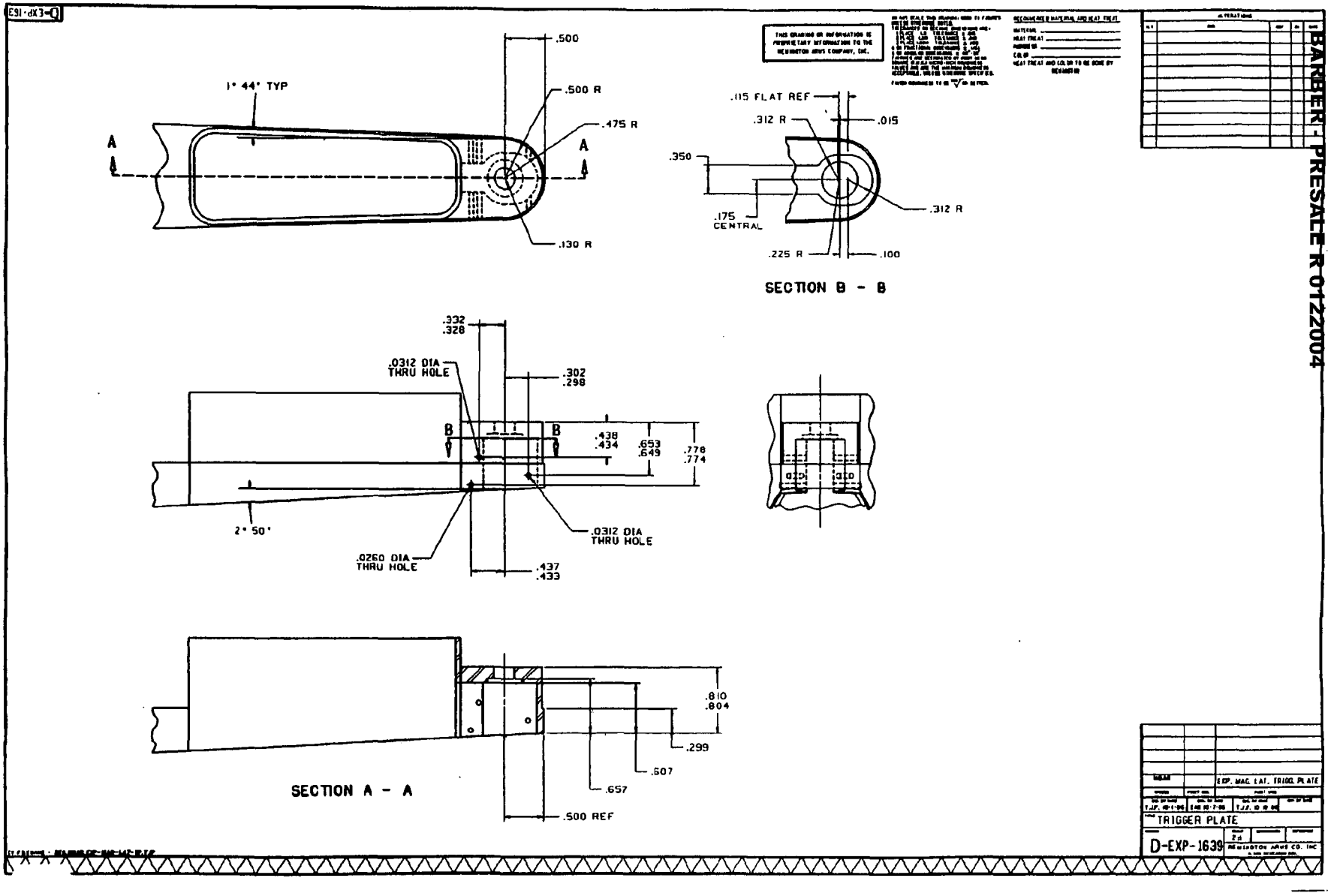

BARBER - PRESALE R 0122004