RECEIVER MEASUREMENTS 821321
222 CALIBER MODEL 700, MODEL 7

RECEIVER MEASUREMENTS 821321

MODEL 700 BDL 4-22-83

FLS

	1	2	3	4	5	6
	B6256201	B6256200	B6293064	B6256269	B6256832	B6256163
1	1.750	1.775	1.672	1.770	1.740	1.760
2	.015	.015	.013	.013	.013	.014
3	13°	13°	13°	13°	13°	13°
4	.320	.297	.418	.310	.340	.320
5	2.070	2.072	2.090	2.080	2.080	2.080
6						
7	.825	.810	.833	.830	.855	.820
8	.005	.005	.005	.005	.005	.005
9	63	63	63	63	63	63
10	.060	.061	.093	.070	.068	.060
11	30°	30°	30°	30°	30°	30°
12	.281	.281	.281	.281	.281	.281
13	.161	.169	.166	.159	.170	.162
13a	.161	.169	.166	.159	.170	.162
14	4.536	4.532	4.533	4.532	4.527	4.532
16						
17	NONE	NONE	NONE	NONE	NONE	NONE
18	.544	.532	.540	.543	.540	.547
19	.976	.976	.965	.978	.975	.980
20	.195	.180	.180	.180	.190	.190
21	.072	.072	.072	.072	.072	.072
22	2.943	2.942	2.938	2.940	2.940	2.944
23	.195	.180	.180	.180	.190	.190
24	.856	.855	.845	.850	.850	.850
25	4.536	4.532	4.533	4.532	4.527	4.532
26	37°	37°	37°	37°	37°	37°
27	.284	.287	.286	.296	.288	.300
28	.284	.287	.286	.296	.288	.300
29	.062	.062	.061	.061	.063	.061
30	.280	.280	.280	.280	.280	.280
31	.702	.702	.702	.702	.702	.702
32	.451	.451	.450	.451	.450	.450
33	.030	.030	.010	.030	.025	.030
34	20°	20°	20°	20°	20°	20°
35	.005	.005	.005	.005	.005	.005
36	SHARP	SHARP	SHARP	SHARP	SHARP	SHARP
37	OK	OK	OK	OK	OK	OK
38						
39	+.000	+.001	+.000	-.006	+.002	+.003
40	+.003	-.005	+.002	+.005	-.003	-.004

NATIONAL 45-606 EYE-EASE 45-706 20/20 BUFF Made in U.S.A.

.222 CALIBER M/7, M/700 ADL, M/700 BDL

RECEIVER MEASUREMENTS

MODEL 700 (9 ADL RIFLES, 23 BDL RIFLES)

SERIAL NO.	DWG. DIMENSION MIN	MAX	MEAN
MEASUREMENT NO.	↓	↓	↓
1	1.700	1.730	1.715
2	.015	.018	.0165
3	13° REF L		
4.	.245	.255	.250
5.	2.045	2.055	2.050
6.			
7.	.695	.705	.700
8.	.020 R		
9	32		
10.	.055	.065	.060
11.	30°		
12.	.281 TYP		
13	.163	.173	.168
13a	.163	.173	.168
14	4.4075	4.4175	4.4125
15	1/16 R TYP		
16	.535	.545	.540
17	.968	.978	.973
18	.180 R	.205 R	.1925 R
19	.072 GAUGE		
20	2.936	2.944	2.940
21.	.180 R	.205 R	.1925 R
22.	.835	.845	.840
23	4.530	4.535	4.5325
24	37°		
FRONT 25	.282	.288	.285
BACK 25a	.282	.288	.285
26	.055	.063	.059
27	.278 R	.280 R	.279 R
28	.700	.703	.7015
29	.449	.452	.4505
30	.015	.025	.020
31	20°		
32	.025R		
33	ROUND OFF SHARP CORNERS		
34	STRAIGHT & PARALLEL		
35			
36	.004	.004	±.004

D-33580

E-33225

NATIONAL 45-606 EYE-EASE 45-706 20/20 BUFF Made in U.S.A.

.222 CALIBER M/7, M/700 ADL, M/700 BDL

RECEIVER MEASUREMENTS

MODEL 7 (11 RIFLES)

	SERIAL NO.	DWG. MIN.	DIMENSION MAX	MEAN
	MEASUREMENT NO.	↓	↓	↓
	1	.1640	.1670	.1655
	2	.015	.018	.0165
	3	13° REF ∠		
	4	.245	.255	.250
	5.	1.985	1.995	1.990
	6.	.015	.018	.0165
	7	.755	.765	.760
	8	.020 R.		
	9.	~~32~~		
	10.	.055	.065	.060
	11	30°		
	12			
	13			
	14	4.415	4.420	4.4175
	15	7/16 R. TYP.		
	16	.535	.545	.540
	17	.968	.978	.973
	18	.150 R TYP		
	19	.072 GAUGE		
	20.	2.936	2.944	2.940
	21	1/8 R		
	21a	.030 R MAX.		
	22	.835	.845	.840
	23			
	24	37°		
Front	25	.282	.288	.285
Back	25a	.282	.288	.285
	26	.116	.124	.120
	27	.263	.265	.264
	28	.700	.703	.7015
	29	.449	.452	.4505
	30	.015	.025	.020
	31	30°		
	32	.025 R		
	33	ROUND OFF SHARP CORNERS		
	34	45°		
	35	.624	.634	.629
	36	.004	.004	±.004
	37	46°	.181	
	38	23°	.91	

C-91877

C-91876

M700 Follower-Spring Evaluation

GUN TYPE	AMMO TYPE	# GUNS SHOT	
BDL	A	12	3-4-83
BDL	B	12	1st RUN
ADL	A	12	
7/LWT	B	12	
7/LWT	A	12	3-7-83
ADL	B	12	2nd RUN
BDL	A	12	
BDL	B	12	
BDL	A	12	3-8-83
BDL	B	12	3rd
ADL	A	12	
7/LWT	B	12	
7/LWT	A	12	3-9-83
ADL	B	12	4th
BDL	A	12	
BDL	B	12	

192
3
576

.222 CALIBER MODEL 7, MODEL 700 ADL & BDL 821321

RECEIVER MEASUREMENTS

MODEL 7 (11 RIFLES)

DWG. NO.	SERIAL No. / MEASUREMENT No.	DWG. DIMENSIONS MIN.	MAX	MEAN	ACTUAL DIMENSIONS
C-91877	1.	.1640	.1670	.1655	
	2.	.015	.018	.0165	
	3	13° REF. ∠			
	4	.245	.255	.250	
	5	1.985	1.995	1.990	
	6	.015	.018	.0165	
	7	.755	.765	.760	
	8	.020 R			
	9	32			
	10	.055	.065	.060	
	11	30°			
D-91876	12				
	13				
	14	4.415	4.420	4.4175	
	15	7/16 R. TYP.			
	16	.535	.545	.540	
	17	.968	.978	.973	
	18	.150 R TYP.			
	19	.072 GAGE			
	20	2.936	2.944	2.940	
	21	1/8 R			
	21a	.030 R MAX			
	22	.835	.845	.840	
	23				
	24	37°			
	25	.282	.288	.285	
	25a	.282	.288	.285	
	26	.116	.124	.120	
	27	.263	.265	.264	
	28	.700	.703	.7015	
	29	.449	.452	.4505	
	30	.015	.025	.020	
	31	30°			
	32	.025 R			
	33	ROUND OFF SHARP CORNERS			
	34	45°			
	35	.624	.634	.629	
	36	.004	.004	±.004	
	37	46° 18'			
	38	23° 9'			

.222 CALIBER MODEL 7, MODEL 700 ADL & BDL 521371

RECEIVER MEASUREMENTS

MODEL 7 (11 RIFLES)

DWG. NO.	SERIAL NO. / MEASUREMENT NO.	DWG. DIMENSIONS MIN	MAX	MEAN	ACTUAL DIMENSIONS
C-91877	1.	.1640	.1670	.1655	
	2.	.015	.018	.0165	
	3	13° REF. ∠			
	4	.245	.255	.250	
	5	1.985	1.995	1.990	
	6	.015	.018	.0165	
	7	.755	.765	.760	
	8	.020 R			
	9	32			
	10	.055	.065	.060	
	11	30°			
D-91876	12				
	13				
	14	4.415	4.420	4.4175	
	15	7/16 R. TYP.			
	16	.535	.545	.540	
	17	.968	.978	.973	
	18	.150 R TYP.			
	19	.072 GAGE			
	20	2.936	2.944	2.940	
	21	1/8 R			
	21a	.030 R MAX			
	22	.835	.845	.840	
	23				
	24	37°			
	25	.282	.288	.285	
	25a	.282	.288	.285	
	26	.116	.124	.120	
	27	.263	.265	.264	
	28	.700	.703	.7015	
	29	.449	.452	.4505	
	30	.015	.025	.020	
	31	30°			
	32	.025 R			
	33	ROUND OFF SHARP CORNERS			
	34	45°			
	35	.624	.634	.629	
	36	.004	.004	±.004	
	37	46° 18'			
	38	23° 9'			

.222 CALIBER MODEL 7, MODEL 700 ADL & BDL 82:371

RECEIVER MEASUREMENTS

MODEL 7 (11 RIFLES)

DWG. NO.	SERIAL NO. / MEASUREMENT NO.	DWG. DIMENSIONS MIN.	MAX	MEAN	ACTUAL DIMENSIONS
C-91877	1.	.1640	.1670	.1655	
	2.	.015	.018	.0165	
	3	13° REF. ∠			
	4	.245	.255	.250	
	5	1.985	1.995	1.990	
	6	.015	.018	.0165	
	7	.755	.765	.760	
	8	.020 R			
	9	32			
	10	.055	.065	.060	
	11	30°			
D-91876	12				
	13				
	14	4.415	4.420	4.4175	
	15	7/16 R. TYP.			
	16	.535	.545	.540	
	17	.968	.978	.973	
	18	.150 R TYP.			
	19	.072 GAGE			
	20	2.936	2.944	2.940	
	21	1/8 R			
	21a	.030 R MAX			
	22	.835	.845	.840	
	23				
	24	37°			
	25	.282	.288	.285	
	25a	.282	.288	.285	
	26	.116	.124	.120	
	27	.263	.265	.264	
	28	.700	.703	.7015	
	29	.449	.452	.4505	
	30	.015	.025	.020	
	31	30°			
	32	.025 R			
	33	ROUND OFF SHARP CORNERS			
	34	45°			
	35	.624	.634	.629	
	36	.004	.004	±.004	
	37	46° 18'			
	38	23° 9'			

.222 CALIBER MODEL 7, MODEL 700 ADL & BDL 321371

RECEIVER MEASUREMENTS

MODEL 7 (11 RIFLES)

DWG. NO.	SERIAL No. / MEASUREMENT No.	DWG. DIMENSIONS MIN	MAX	MEAN	ACTUAL DIMENSIONS
C-91877	1.	.1640	.1670	.1655	
	2.	.015	.018	.0165	
	3	13° REF. ∠			
	4	.245	.255	.250	
	5	1.985	1.995	1.990	
	6	.015	.018	.0165	
	7	.755	.765	.760	
	8	.020 R			
	9	32			
	10	.055	.065	.060	
	11	30°			
D-91876	12				
	13				
	14	4.415	4.420	4.4175	
	15	7/16 R. TYP.			
	16	.535	.545	.540	
	17	.968	.978	.973	
	18	.150 R TYP.			
	19	.072 GAGE			
	20	2.936	2.944	2.940	
	21	1/8 R			
	21a	.030 R MAX			
	22	.835	.845	.840	
	23				
	24	37°			
	25	.282	.288	.285	
	25a	.282	.288	.285	
	26	.116	.124	.120	
	27	.263	.265	.264	
	28	.700	.703	.7015	
	29	.449	.452	.4505	
	30	.015	.025	.020	
	31	30°			
	32	.025 R			
	33	ROUND OFF SHARP CORNERS			
	34	45°			
	35	.624	.634	.629	
	36	.004	.004	±.004	
	37	46° 18'			
	38	23° 9'			

.222 CALIBER MODEL 7, MODEL 700 ADL & BDL 321331

RECEIVER MEASUREMENTS

MODEL 7 (11 RIFLES)

DWG. NO.	SERIAL No. / MEASUREMENT No.	DWG. DIMENSIONS MIN.	MAX	MEAN	ACTUAL DIMENSIONS
C-91877	1.	.1640	.1670	.1655	
	2.	.015	.018	.0165	
	3	13° REF. L			
	4	.245	.255	.250	
	5	1.985	1.995	1.990	
	6	.015	.018	.0165	
	7	.755	.765	.760	
	8	.020 R			
	9	32			
	10	.055	.065	.060	
	11	30°			
D-91876	12				
	13				
	14	4.415	4.420	4.4175	
	15	7/16 R. TYP.			
	16	.535	.545	.540	
	17	.968	.978	.973	
	18	.150 R TYP.			
	19	.072 GAGE			
	20	2.936	2.944	2.940	
	21	1/8 R			
	21a	.030 R MAX			
	22	.835	.845	.840	
	23				
	24	37°			
	25	.282	.288	.285	
	25a	.282	.288	.285	
	26	.116	.124	.120	
	27	.263	.265	.264	
	28	.700	.703	.7015	
	29	.449	.452	.4505	
	30	.015	.025	.020	
	31	30°			
	32	.025 R			
	33	ROUND OFF SHARP CORNERS			
	34	45°			
	35	.624	.634	.629	
	36	.004	.004	±.004	
	37	46° 18'			
	38	23° 9'			

.222 CALIBER MODEL 7, MODEL 700 ADL & BDL 821321

RECEIVER MEASUREMENTS

MODEL 700 (9 ADL, 23 BDL RIFLES)

DWG. NO.	SERIAL NO. / MEASUREMENT NO.	DWG. DIMENSIONS MIN.	MAX.	MEAN	ACTUAL DIMENSIONS
D-33580	1	1.700	1.730	1.715	
	2	.015	.018	.0165	
	3	13° REF. L.			
	4	.245	.255	.250	
	5	2.045	2.055	2.050	
	6				
	7	.695	.705	.700	
	8	.020 R			
	9	32			
	10	.055	.065	.060	
	11	30°			
	12	.281 TYP.			
	13	.163	.173	.168	
	13a	.163	.173	.168	
	14	4.4075	4.4175	4.4125	
E-33225	15	7/16 R TYP.			
	16	.535	.545	.540	
	17	.968	.978	.973	
	18	.180 R	.205 R	.1925 R	
	19	.072 GAGE			
	20	2.936	2.944	2.940	
	21	.180 R	.205 R	.1925 R	
	22	.835	.845	.840	
	23	4.530	4.535	4.5325	
	24	37°			
	25	.282	.288	.285	
	25a	.282	.288	.285	
	26	.055	.063	.059	
	27	.278 R	.280 R	.279 R	
	28	.700	.703	.7015	
	29	.449	.452	.4505	
	30	.015	.025	.020	
	31	20°			
	32	.025 R			
	33	ROUND OFF SHARP CORNERS			
	34	STRAIGHT & PARALLEL			
	35				
	36	.004	.004	±.004	

.222 CALIBER MODEL 7, MODEL 700 ADL & BDL 321321

RECEIVER MEASUREMENTS

MODEL 700 (9 ADL, 23 BDL RIFLES)

DWG. NO.	SERIAL NO. / MEASUREMENT NO.	DWG. DIMENSIONS MIN.	MAX.	MEAN	ACTUAL DIMENSIONS
D-33580	1	1.700	1.730	1.715	
	2	.015	.018	.0165	
	3	13° REF ∠			
	4	.245	.255	.250	
	5	2.045	2.055	2.050	
	6				
	7	.695	.705	.700	
	8	.020 R			
	9	32			
	10	.055	.065	.060	
	11	30°			
	12	.281 TYP.			
	13	.163	.173	.168	
	13a	.163	.173	.168	
	14	4.4075	4.4175	4.4125	
E-33225	15	7/16 R TYP.			
	16	.535	.545	.540	
	17	.968	.978	.973	
	18	.180 R	.205 R	.1925 R	
	19	.072 GAGE			
	20	2.936	2.944	2.940	
	21	.180 R	.205 R	.1925 R	
	22	.835	.845	.840	
	23	4.530	4.535	4.5325	
	24	37°			
	25	.282	.288	.285	
	25a	.282	.288	.285	
	26	.055	.063	.059	
	27	.278 R	.280 R	.279 R	
	28	.700	.703	.7015	
	29	.449	.452	.4505	
	30	.015	.025	.020	
	31	20°			
	32	.025 R			
	33	ROUND OFF SHARP CORNERS			
	34	STRAIGHT & PARALLEL			
	35				
	36	.004	.004	±.004	

.222 CALIBER MODEL 7, MODEL 700 ADL & BDL 321321

RECEIVER MEASUREMENTS

MODEL 700 (9 ADL, 23 BDL RIFLES)

DWG. NO.	SERIAL NO. / MEASUREMENT NO.	DWG. DIMENSIONS MIN.	MAX.	MEAN	ACTUAL DIMENSIONS
D-33580	1	1.700	1.730	1.715	
	2	.015	.018	.0165	
	3	13° REF L.			
	4	.245	.255	.250	
	5	2.045	2.055	2.050	
	6				
	7	.695	.705	.700	
	8	.020 R			
	9	32			
	10	.055	.065	.060	
	11	30°			
	12	.281 TYP.			
	13	.163	.173	.168	
	13a	.163	.173	.168	
	14	4.4075	4.4175	4.4125	
E-33225	15	7/16 R TYP.			
	16	.535	.545	.540	
	17	.968	.978	.973	
	18	.180 R	.205 R	.1925 R	
	19	.072 GAGE			
	20	2.936	2.944	2.940	
	21	.180 R	.205 R	.1925 R	
	22	.835	.845	.840	
	23	4.530	4.535	4.5325	
	24	37°			
	25	.282	.288	.285	
	25a	.282	.288	.285	
	26	.055	.063	.059	
	27	.278 R	.280 R	.279 R	
	28	.700	.703	.7015	
	29	.449	.452	.4505	
	30	.015	.025	.020	
	31	20°			
	32	.025 R			
	33	ROUND OFF SHARP CORNERS			
	34	STRAIGHT & PARALLEL			
	35				
	36	.004	.004	±.004	

.222 CALIBER MODEL 7, MODEL 700 AOL & BOL 32132

RECEIVER MEASUREMENTS

MODEL 700 (2 AOL, 23 BOL RIFLES)

DWG. NO.	SERIAL NO. / MEASUREMENT NO.	DWG. DIMENSIONS MIN.	MAX.	MEAN	ACTUAL DIMENSIONS
D-33580	1	1.700	1.730	1.715	
	2	.015	.018	.0165	
	3	13° REF. L.			
	4	.245	.255	.250	
	5	2.045	2.055	2.050	
	6				
	7	.695	.705	.700	
	8	.020 R			
	9	32			
	10	.055	.065	.060	
	11	30°			
	12	.281 TYP.			
	13	.163	.173	.168	
	13a	.163	.173	.168	
	14	4.4075	4.4175	4.4125	
E-33225	15	7/16 R TYP.			
	16	.535	.545	.540	
	17	.968	.978	.973	
	18	.180 R	.205 R	.1925 R	
	19	.072 GAGE			
	20	2.936	2.944	2.940	
	21	.180 R	.205 R	.1925 R	
	22	.835	.845	.840	
	23	4.530	4.535	4.5325	
	24	37°			
	25	.282	.288	.285	
	25a	.282	.288	.285	
	26	.055	.063	.059	
	27	.278 R	.280 R	.279 R	
	28	.700	.703	.7015	
	29	.449	.452	.4505	
	30	.015	.025	.020	
	31	20°			
	32	.025 R			
	33	ROUND OFF SHARP CORNERS			
	34	STRAIGHT & PARALLEL			
	35				
	36	.004	.004	±.004	

.222 CALIBER MODEL 7, MODEL 700 AOL & BOL 32132

RECEIVER MEASUREMENTS

MODEL 700 (9 AOL, 23 BOL RIFLES)

DWG. NO.	SERIAL NO. / MEASUREMENT NO.	DWG. DIMENSIONS MIN.	MAX.	MEAN	ACTUAL DIMENSIONS
D-33580	1	1.700	1.730	1.715	
	2	.015	.018	.0165	
	3	13° REF. L.			
	4	.245	.255	.250	
	5	2.045	2.055	2.050	
	6				
	7	.695	.705	.700	
	8	.020 R			
	9	32			
	10	.055	.065	.060	
	11	30°			
	12	.281 TYP.			
	13	.163	.173	.168	
	13a	.163	.173	.168	
	14	4.4075	4.4175	4.4125	
E-33225	15	7/16 R TYP.			
	16	.535	.545	.540	
	17	.968	.978	.973	
	18	.180 R	.205 R	.1925 R	
	19	.072 GAGE			
	20	2.936	2.944	2.940	
	21	.180 R	.205 R	.1925 R	
	22	.835	.845	.840	
	23	4.530	4.535	4.5325	
	24	37°			
	25	.282	.288	.285	
	25a	.282	.288	.285	
	26	.055	.063	.059	
	27	.278 R	.280 R	.279 R	
	28	.700	.703	.7015	
	29	.449	.452	.4505	
	30	.015	.025	.020	
	31	20°			
	32	.025 R			
	33	ROUND OFF SHARP CORNERS			
	34	STRAIGHT & PARALLEL			
	35				
	36	.004	.004	±.004	

.222 CALIBER MODEL 7, MODEL 700 ADL & BDL 321321

RECEIVER MEASUREMENTS

MODEL 700 (9 ADL, 23 BDL RIFLES)

DWG. NO.	SERIAL NO. / MEASUREMENT NO.	DWG. DIMENSIONS MIN.	MAX.	MEAN	ACTUAL DIMENSIONS
D-33580	1	1.700	1.730	1.715	
	2	.015	.018	.0165	
	3	13° REF L.			
	4	.245	.255	.250	
	5	2.045	2.055	2.050	
	6				
	7	.695	.705	.700	
	8	.020 R			
	9	32			
	10	.055	.065	.060	
	11	30°			
	12	.281 TYP.			
	13	.163	.173	.168	
	13a	.163	.173	.168	
	14	4.4075	4.4175	4.4125	
D-33225	15	7/16 R TYP.			
	16	.535	.545	.540	
	17	.968	.978	.973	
	18	.180 R	.205 R	.1925 R	
	19	.072 GAGE			
	20	2.936	2.944	2.940	
	21	.180 R	.205 R	.1925 R	
	22	.835	.845	.840	
	23	4.530	4.535	4.5325	
	24	37°			
	25	.282	.288	.285	
	25a	.282	.288	.285	
	26	.055	.063	.059	
	27	.278 R	.280 R	.279 R	
	28	.700	.703	.7015	
	29	.449	.452	.4505	
	30	.015	.025	.020	
	31	20°			
	32	.025 R			
	33	ROUND OFF SHARP CORNERS			
	34	STRAIGHT & PARALLEL			
	35				
	36	.004	.004	±.004	

BY _____ DATE _____ SUBJECT BDL SHEET NO. _____ OF _____

CHKD. BY _____ DATE _____ JOB NO. _____

Dimension 4

TOL. RANGE = .010
MEASURED RANGE = .195

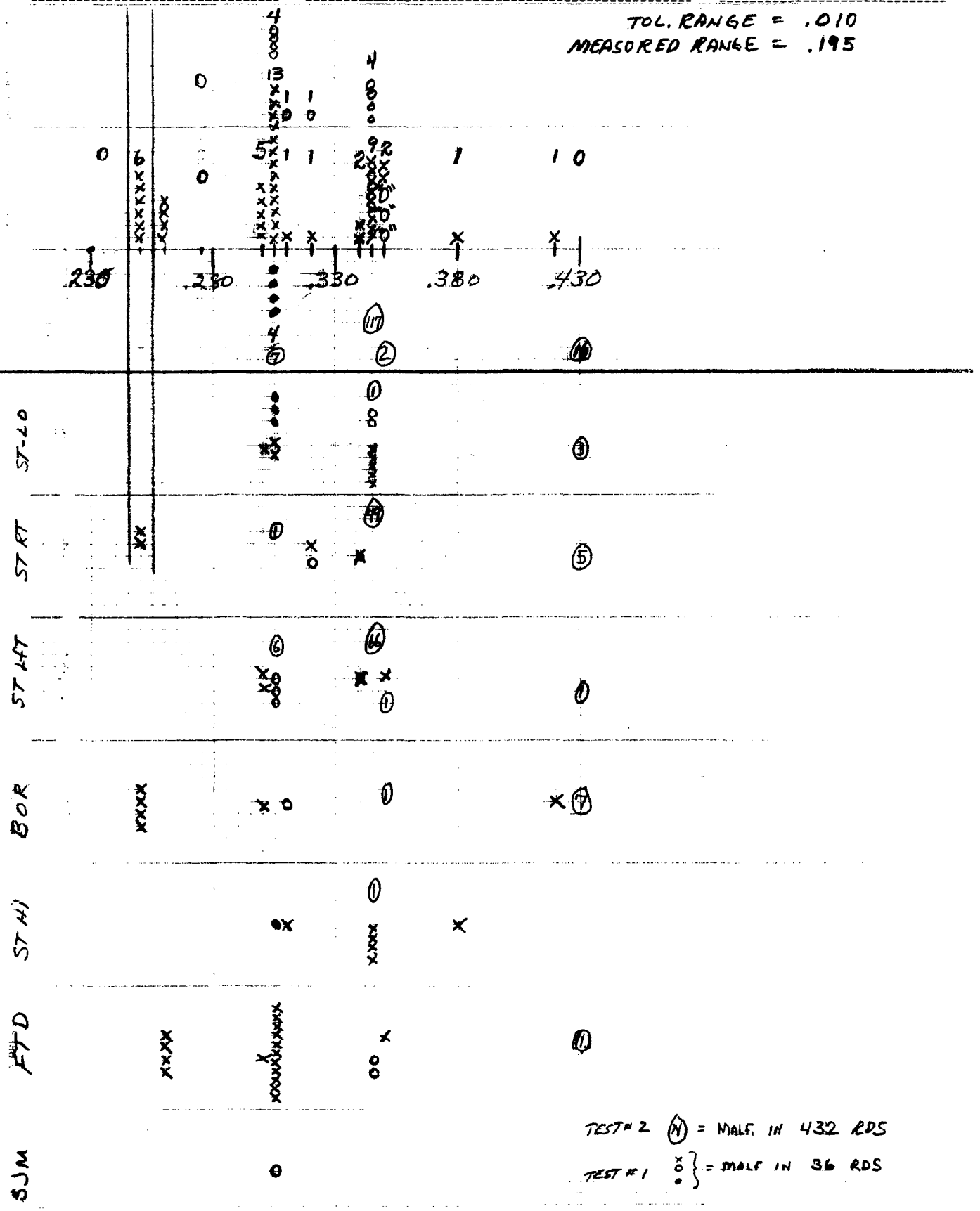

TEST # 2 (N) = MALF. IN 432 RDS

TEST # 1 x o • } = MALF IN 36 RDS

RD 6605

cc: S. Darling

TO: W. STEVENS

ILION RESEARCH DIVISION

FIREARMS WITHDRAWAL OR RETURN

DATE 3/17/83

QUANTITY 32

LETTER NO. 2020

MODEL 700

CAL./GA.

WORK ORDER G-0196-000

SERIAL NOS.

9 ADL's - RAMAC 65760
23 BDL's - RAMAC 65781

ADL's	BDL's -	
D6287841	D6256163	D6256201
D6293294	D6256507	D6256482
D6287811	D6293864	D6287066
D6287269	D6293853	D6287051
D6287173	D6256269	D6293952
D6287087	D6287234	D6294947
D6288641	D6294240	D6288641
D6293191	D6287240	D6256208
D6289667	D6256032	D6288300
	D6288104	D6288110
	D6261428	D6256211
	D6256522	

REMARKS:

Approval

CMitchie:js

M/660,700,742,760 - Barrel Assembly

PROCESS ENGINEERING ASSIGNMENTS

Job Description:	Area Engineer: Payne
Oper. - Drill and Tap Ramp Screw Holes	Sheet No.: 1 / Job No. 3915-P2
Objective: Reduce tool cost; improve quality.	Job Priority: C-2
	Job Code: 13
	Model: 660, 700, 742, 760
	Part Name: Bbl. Assembly
	Oper. No.: 125
	Dept. No.: 58
	Est. Comp. Mo/Yr:
	Est. Comp. Hours:
Assigned By: / Date:	Est. Savings:

Report Date	Elapsed Hrs.	Accomplishments
11/18/68		Requested change of vendor on Spec. Drill A-87479. Due to approx. 80% of National drills were cutting oversize. Have specified Cleveland or Morse. Cleveland drills in use at present time are very satisfactory as to size and wearing quality. Purchase price is the same. Ordered six dozen Reiff and Nester Thread Formers with std. Nitrite finish and six dozen chrom shield. Comparison test showed Nitrite equal to chrome finish. Both are superior to Beasly roll taps as none have sluffed off leaving stripped or straight or tight threads in Barrel. They also meet our gages better and leave less burr backing out. Purchase price on original order of twelve dozen was approx.. .90¢ per tap less. Have sent marked print to vendor requesting less threaded area for strength. This may also reduce purchase price.

RD - 6566 2/1/63

PROCESS ENGINEERING ASSIGNMENTS

Job Description: Investigate target reject causes	Area Engineer: Payne
	Sheet No.: 1 of 2 / Job No.: 3916-P2
	Job Priority: B-3
	Job Code: 10
	Model: 660, 700
	Part Name: Bbl. Assem.
	Oper. No.:
	Dept. No.:
	Est. Comp. Mo/Yr:
	Est. Comp. Hours:
Assigned By: / Date:	Est. Savings:

Report Date	Elapsed Hrs.	Accomplishments
11/18/68		24 Model 700 7mm Cal. Barrels which were rejected for point of impact were inspected and found to be out on angularity reading in direction and smount shown on rejection ticket. These 24 were angular straightened. Four were scrapped due to excessive bends believed caused by jack straightening. The remaining twenty targeted very well. Produced 100 M/700 7mm Cal. omitting concentricity check and jack straightening. Angularity and concentricity readings were taken before and after angular straighten. These readings showed: Before: 11 - Did not require adjustment. 75 - Were in the .003/.008 range which would require sight toggling. 14 - Were above .008 which would result in rejection. All were brought into angularity specs. (.000 to .002) without any significant concentricity changes. This lot of Barrels passed 100% versus an average of 11% rejects for previous nine days. Recommended putting temporary oper. in to angular straighten until improvement of product indicates it will not be required. This proposal was rejected by Production. When any quantity of high or low shooters appear on report wrong sights can be suspected.

RD - 6566 2/1/63

PROCESS ENGINEERING ASSIGNMENTS

Job Description:	Area Engineer: Payne
Investigate target reject causes	Sheet No.: 2 of 2 Job No.: 3916-P2
	Job Priority: B-3
	Job Code: 10
	Model: 660, 700
	Part Name: Bbl. Assem.
	Oper. No.:
	Dept. No.:
	Est. Comp. Mo/Yr:
	Est. Comp. Hours:
Assigned By: Date:	Est. Savings:

Report Date	Elapsed Hrs.	Accomplishments
11/18/68		cont'd. Observed 63 guns at target having wrong front sight in one day. This was brought to attention of Assembly Supervision who promised to correct this condition. Correct sights for all models and calibers are posted by Assembly Eng. on all benches involved. A bad condition was noted at turn oper. breech end being egg shaped in bore. This condition was brought to attention of ream oper. foreman. He stated if correct equipment were used on set up, this would not happen and promised correction. Fifty Model 700 - 308 Cal. no turn Barrels and control lot of 50 turn Barrels were checked for concentricity after assembly to Receiver. 3 No turn required straightening versus 26 turn Barrels. Have requested target results on these lots.

RD - 6566 2/1/63

Cost - 600/700

M/600-700 COMPONENTS COST REVIEW

	Savings	Completion Date	Responsibility	Code
1. RECEIVER				
A. Substitute hot rolled steel for cold rolled.	$ 7,000	May, '66	E.R. Carr	PB-108
2. BARREL ASSEMBLY				
A. Material savings. Cut off on Do-All Saw and conveyorize to Wheelabrator.	$ 1,740	Not Scheduled	F.H. Byrnes	PB-27
B. Review need for hand chamber operation on stainless steel Barrels.	$ 715	Mar., '66	G.J. Hill	PB-68
C. Stainless steel bars. Proposed 132" vs. present 147". OD changed to 1 1/16".	$ 3,520	Mar., '66	E.R. Carr	PB-124
3. FIRING PIN HEAD				
A. Discontinue Oper. #28 "Polish Sand End". Combine with Oper. #9-1. (Remington made parts only). Vendor deburr @ $.55/C. Remington belt sand at Oper. #18 @ $.98/C. Remington Deburr at Oper. #9-1A @ $.66/C/	$ 440	Mar., '66	G.J. Hill	PR-53
4. FINAL ASSEMBLY				
A. Use power screw driver for assembly of Receiver Plug Screws. Trial run is being made with larger hole size and tap size to compensate for Heat Treat shrinkage.	$ 1,000	Mar., '66	E.R. Carr V.G. DeReus	A-59
5. BOLT HEAD				
A. Discontinue Oper. #23 "Drill Ejector Retaining Pin Hole", as a separate oper.	$ 1,800	Not Scheduled	V.G. DeReus	PB-77
B. Review operation of Special Machine. M/788 machine to be tried out and evaluated for use of machine with same design for M/700 Bolt Heads.	$ 1,000	Mar., '66	G.J. Hill F.H. Byrnes	PB-47
6. STOCK ASSEMBLY				
A. Purchase drill press to assemble threaded pins. Machine now being used.	$ 300	Mar., '66	C.W. Weschrob	PW-19
B. Use Hycar Butt Plates on M/700 Stocks. A model drawing revision may be necessary. The die mold is being changed.	$ 5,300	Not Scheduled	M.H. Walker R.P. Kelly	PW-18
C. Revise tooling on Richardson Copy Lathes to reduce change-over costs.	$ 335	Mar., '66	M. Sweeney	PW-42
D. Purchase special Richardson Mill & Drill Machine for Long Stocks.	$ 810	Aug., '66	R.B. Hurley	PW-52
. FIRING PIN				
A. Buy machine to form point.	$ 550	Mar., '66	F.H. Byrnes	PB-39

CONFIDENTIAL-SUBJECT TO PROTECTIVE ORDER
KINZER V. REMINGTON

	Savings	Completion Date	Responsibility	Code
8. TRIGGER HOUSING				
A. Proposed Rivet Process. Drawings being made and a project has been approved.	$ 8,550	Aug.,'66	P.B. Croop	PB-138
B. Build Special Machine to Drill and Tap Housing Assembly.	$ 2,500	Not Scheduled	P.B. Croop	PB-36
9. SAFETY ASSEMBLY - M/600				
A. Eliminate Oper. #35 "Mill Radius, Bottom of Thumb Piece", and Oper. #40 "Buff Radius".	$ 1,050	Not Scheduled	V.G. DeReus	PA-34
B. Investigate possibilities of making the Safety Assembly common with the Model 700.	$ 3,100	Not Scheduled	R.P. Kelly	PR-123
10. SEAR-SAFETY CAM ASSEMBLY				
A. Powdered Metal unitized construction. Process not released yet.	$ 9,000	Mar.,'66	K.R. Chadwick	PA-29
11. BOLT BODY				
A. Review Special Machine performance.	$ 410	Mar.,'66	G.J. Hill F.H. Byrnes	A-84
12. Manufacture Telescope Mounts vs. Purchasing. Project started for proposed powder metal manufacture.	$ 6,870	Not Scheduled	V.G. DeReus	PR-109

3-10-66
FGC:sm

CONFIDENTIAL-SUBJECT TO PROTECTIVE ORDER
KINZER V. REMINGTON

cc: L.J. Boyle
H.J. Hackman) In
V.G. DeRous)turn
F.H. Byrnes
J.W. Blair
J.H. Carter
Estimate File #2441

July 24, 1964

E. R. CARR

MODEL 600 & 700 SAFETY ASSEMBLY

A revised cost comparison for the present method of processing the above model Safety Assemblies to the proposed method of molding a Nylon Thumb Piece or Safety Button directly to the Safety, has been completed.

The M/700 proposed Molded Process indicates a gross annual savings of approximately $3,800 and will pay for itself in less than one year, plus a 10% return on an expenditure of $2,900, of which $1,950 is for a two cavity mold and $950 for vendor tooling changes and Mini-jector Press alterations.

The M/600 proposed Molded Process indicates a gross annual savings of approximately $650 and will pay for itself in slightly over seven years, plus a 10% return on an expenditure of $2,800, of which $1,850 is for a two cavity mold and $950 for vendor tooling changes and Mini-jector Press alterations.

This comparson was based on the following conditions:

1. The #3-1964 Production Forecast adjusted for spares and scrap.
   a. M/600 - 27,400; b. M/700 - 38,500
2. Latest process and tooling costs by Chem. & Met. Dept.
3. An estimated increase of $1.00/C in the piece price of the Safety.

C. W. Weschrob
Methods & Standards Section

R.H. Brown

R. H. Brown

RHB:sm

BARBER - PRESALE R 0129476

11 x 16½ — 14 columns
With description column

7-2-64 - J.P.

Cost Improvement Potential - Final Assembly
Model 600 Center Fire Rifle

Oper. No.	Extra Work Elements	Frequency in Standard	Allowed Time / Pc. Minutes	Weighted Time / Pc. Minutes	Factor To Convert Min/Pc to $/C	Cost /100 Guns Incl. Ind. Rel. @ 33%	Volume #3-1964 Forecast	Est. Annual Potential Savings
10	Assemble Trigger Assembly:							
	1. File trigger slot inside housing	100%	.090	.090	4.63	.417	25940	$108.00
	2. File detent ball hole in safety lever	100%	.063	.063	"	.292	"	76.00
	3. Emery top end of trigger connector	100%	.032	.032	"	.148	"	39.00
	4. Spread housing to free trigger	47%	.112	.052	"	.241	"	63.00
	5. Spread housing - (sear-cam binds)	50%	.100	.050	"	.232	"	60.00
	6. Safe lever binds - remove - refile detent ball hole	6%	.630	.038	"	.176	"	46.00
	7. Ream safe lever retaining pin hole	20%	.175	.037	"	.181	"	47.00
						Sub Total		438.00
175	Final Assembly							
	1. Ream bolt - (Firing pin binds)	25%	.350	.233	5.12	1.219	"	316.00
	2. Remove bolt & file cam cut (F.P. binds)	10%	.500	.050	"	.256	"	66.00
	3. Retap scope screw hole (Can't start screw)	20%	.461	.092	"	.471	"	122.00
	4. Bolt closes hard - scrape bolt face	10%	.400	.040	"	.205	"	53.00
	5. Bolt closes hard - change bolt assy complete	2%	7.000	.140	"	.717	"	186.00
	6. Remove safe lever - swage cam (safe lever binds)	5%	1.250	.065	"	.333	"	86.00
	7. Swage receiver rail - (Follower jumps mag box)	20%	.200	.040	"	.205	"	53.00
	8. Reject stock - (Visual for finish, mars, etc.)	25%	.543	.136	"	.696	"	181.00
	9. Replace rib screw - (Bad screw - can't start)	26%	.270	.070	"	.358	"	93.00
	10. Retap hole in bbl stud - (Can't start rib screw)	35%	.400	.140	"	.717	"	186.00
	11. Tag gun for wood repair man - (Bolt hits stock)	15%	.337	.051	"	.261	"	68.00
	12. File bolt at lug (Smooth up for more firmness)	100%	.220	.220	"	1.126	"	292.00
						Sub Total		1702.00
						Grand Total		2140.00

CONFIDENTIAL-SUBJECT TO PROTECTIVE ORDER
KINZER V. REMINGTON

BARBER - PRESALE R 0129476
R2530464

BARBER - PRESALE R 0129477

11 x 16½ — 14 columns
With description column

Cost Improvement Detail - Final Assembly

7-2-64 - J.P. Model 700 for Fire Rifle

Oper. No.	Extra Work Elements	Frequency in Standard	Allowed Time / Pc. Minutes	Weighted Time / Pc. Minutes	Factor To Convert Min/Pc to $/C	Cost / 100 Guns Incl. Ind Rel + 33%	Volume - 1964 Forecast	Est. Annual Potential Savings
10	Assemble Trigger Assembly							
	1. File trigger housing (for trigger clearance)	100%	.105	.105	4.63	.486	3677	1800.00
	2. Spread safety lever arm	100%	.056	.056	"	.259	"	950.00
							Sub Total	2750.00
17	Final Assembly							
	1 Tap out Bolt Threads - (Can't Assem. F.P. Assy)	6%	.474	.030	5.12	.154	"	570.00
	2 Rear cut Bolt Head (F.P. Limits)	25%	.957	.032	"	.420	"	1540.00
	3. Bend Ear of Bolt Release & Tap - (To Adj. To Bolt Stop)	100%	.243	.243	"	1.244	"	4570.00
	4. Reject Stock - (Visual for Mag. Fwd. Cut)	25%	.543	.136	"	.696	"	2560.00
	5. Reject Stock - (Trigger Guard Twist)	8%	.701	.056	"	.237	"	1060.00
	6. Bolt Screw Difficult To Stop. Tap out Hole	12%	.403	.049	"	.246	"	900.00
	7. File rail in Rec. - (Shell doesn't feed properly)	16%	.243	.039	"	.205	"	750.00
	8. Try Gun on Wood Repairman - (Bolt hits stock)	32%	.327	.103	"	.553	"	2030.00
	9. Remove Stock & Mag. Box - File Mag Box - Reassemble (Bolt hits mag. box)	4%	1.500	.060	"	.307	"	1130.00
	10. Safe Binds - Remove & Bend Lever	3%	2.000	.060	"	.307	"	1130.00
	11. Remove Bolt To Subassy & Repeat cut (Don't Close Up)	4%	3.500	.140	"	.717	"	2640.00
	12. "Dead" Safe - Change & Adjust	4%	1.750	.070	"	.358	"	1320.00
	13. "Dead" Safe - Change Trigger Housing Assy	1%	3.000	.030	"	.154	"	570.00
	14. Bolt Opens Hard - Change Bolt Assy Complete	2%	7.000	.140	"	.717	"	2640.00
	15. Bolt Opens Hard - Try Another F.P. Assy - File & Adjust	2%	1.500	.030	"	.154	"	570.00
							Sub Total	2398.00
							Grand Total	5148.00

CONFIDENTIAL-SUBJECT TO PROTECTIVE ORDER
KINZER V. REMINGTON

BARBER - PRESALE R 0129477
R2530465

f 700 Cost
cut under Hill

SJH
7/16/64

Model 700, 600, XP100, 40XB Receivers

Alignment of Bolt Hole to O.D.
Alignment of Bolt Hole to Front Face

Problem: Obtain best alignment between O.D., Bolt Hole and Front Face.

Process Problems:

A- By following process as set up on receivers cylindrical ground on O.D. after heat treat the Remington Roll and serial number are removed by the grind. At present cylindrical grind is done before heat treat. This does not allow correction for heat treat warpage

B- When receivers are ground (O.D.) before heat treat and face of receivers ground after heat treat - misalignment occurs between I.D. and front face

Solution: Grind O.D. and Face from I.D. at the same time after heat treat.

Ways of Achieving Solution:

A- Try special "Remington" roll for M/700 due in plant 7/21/64 from Sumner Stamping to roll mark after heat Treat.

BH
7/16/64

Estimated Completion

Tests will be conducted for endurance of roll — 9/15/64

B. when test results are satisfactory we will have to order a serial numbering head, similar in composition to "Remington" roll. Also order Remington Rolls for models 600-100 & 40XB. Tests will have to be made on endurance of Serial Number roll. — 11/1/64

C- alter Cinn. cylindrical grinder to add Tool post grinder to grind face during or after O.D is being ground. — 12/1/64

Safety; a locking device on a fire arm designed to provide protection against accidental or unintentional discharge under normal usage when properly engaged.

cc. Ed. Siemkiewicz

G-86

DON'T SAY IT—WRITE IT

To C. B. WORKMAN

Date September 12, 1978

From J. W. BROOKS

BOB NAGEL's ARTICLE ON HUNTING RIFLE SAFETIES - In March-April 1978 Rifle Magazine

The part of the above mentioned article that covers the M/700 Safety is incorrect. He uses the word "lock" which Webster defines in the following way:

"To hold fast or inactive: Fix"

Using this terminology the M/700 firing pin (or striker) is locked when the safety is "ON".

He states that the safety does not lock the firing pin (or striker) but blocks the trigger.

The M/700 firing pin (or striker)is locked back by the sear safety cam assembly. The sear safety cam assembly is in turn locked up by the safety. The trigger can be moved and nothing will happen.

He states that if the safety device should malfunction, the firing pin (or striker) is free to fall with the safety in the "ON" position. This infers that the safety is a required part of the fire control (firing mechanism) to operate the firing pin. This is incorrect because if the safety is completely removed the firing pin can still be cocked and safely activated.

The M/700 safety operates as follows:

With the bolt closed and when the safety is moved to the "ON" position, the sear safety cam is moved or cammed up off the trigger connector by the safety. The sear safety cam is in contact with the firing pin head and moves it slightly to the rear. The firing pin cannot move forward. It is locked to the rear. The trigger is free to be moved within limits. In its normal position the trigger is spring loaded to the rear where it remains under the sear safety cam. Therefore, if the sear safety cam was suddenly allowed to drop down it would come in contact with the trigger connector and stop. This would prevent the firing pin from falling until the trigger was activated.

JWB:T

take time to be safe

take time to be safe

cc: E.G. Larson
R.B. Sperling
J.H. Chisnall

RD-49-B

REMINGTON ARMS COMPANY, INC.

INTER-DEPARTMENTAL CORRESPONDENCE

Remington DUPONT PETERS DUPONT

"CONFINE YOUR LETTER TO ONE SUBJECT ONLY"

August 14, 1978

John Brooks — Please see me Clark

TO: C.B. WORKMAN
J.P. LINDE

FROM: E.F. SIENKIEWICZ

SUBJECT: HUNTING RIFLE SAFETIES - ARTICLE IN RIFLE MAGAZINE

Enclosed is a copy of the subject article in which the author, Bob Nagel, attacks our design of the Model 700 safety.

I do not believe that his information is entirely correct and we should prepare a letter of rebuttal pointing out the errors and how our trigger mechanism really functions. We can then have Earl Larson and Bob Sperling advise us on how to handle this situation.

Please contact me on this matter.

E.F. Sienkiewicz

EFS:tpp
encl.

REMINGTON ARMS CO.
RECEIVED
AUG 15 1978
ILION RESEARCH DIVISION

BARBER - PRESALE R 0129484

TROPHY POINTERS

By BOB HAGEL

RF
AUG - 9 1978
E. F. SILNAVIEWICZ

Hunting Rifle Safeties

OPINIONS OF WHICH type of most desirable for a hunting rifle are as varied as the designs themselves. Many opinions are based on *use* of a certain type of safety and the fact that the hunter is familiar with it. Long association with a rifle and its safety may blind the owner to any drawbacks it may have. If it has performed well, and he is used to operating it, he may never become aware of faults it may have under some severe weather conditions, or other rigorous use to which it has never been subjected.

If you use a rifle long enough, a poorly located safety becomes so familiar that you never give a thought to the fact that other locations may be handier and faster. And if it has never malfunctioned or given you any other mechanical problem, you may never realize how much trouble it can give under certain hunting conditions, or that it is far from *safe*.

I won't attempt to cover the mechanical function of the intricate parts of some modern safety systems, because space does not permit. So we'll stick to convenience and reliability under various hunting conditions.

In thinking of reliability and looking back at some of the older safety designs found on both military and sporting rifles made up to 85 years ago, I'm not convinced that we have made much progress as far as *safe* safeties are concerned. Starting with the original Mauser-type safety found on foreign-made military rifles, and also on our own Krag and Springfield, you'll find a safety that was *safe* when in the ON position. When the activating lever was rolled over it placed about a quarter-inch of steel through a notch in the striker, at the same time pulling it back so that the sear was disengaged — leaving the trigger free of contact with the striker. There was no way the rifle could fire unless the striker rod broke forward of the safety — something somewhat less likely than winning the Irish Sweepstakes.

While the old Mauser-type military safety, which was also used on a number of Mauser sporter actions as well as the Model 54 Winchester was as safe as a safety could be made, it was neither handy nor fast. Neither was it practical when a scope sight was mounted low over the bridge. FN solved this problem by extending the finger lever out and curving it down under the scope eyepiece, and some U.S. rifle accessory makers followed suit.

These replacement safeties had a number of disadvantages; they had only two positions, ON and OFF, so in order to open the bolt the safety was completely off (even though it did lock the bolt in the ON position). But the biggest problem arose from the fact that the lever movement between ON and OFF was very short. If the rifle was carried on a sling with the safety lever toward the hunter, it was probable that it would soon be moved to the OFF position by rubbing against the clothing. (Some were on the left, some on the right side.)

When Winchester replaced the Model 54 with the Model 70, the safety was also changed for the better. The Model 70 safety has been revamped since that day, and has evolved into what is perhaps the most reliable safety used on a modern bolt action rifle. Often called the "wing" safety, it is in a handy location on the right side of the cocking piece. It is a three-position safety that blocks the striker and locks the bolt in the full ON position, but when pushed to the center position it allows the bolt to be opened while still locking the striker — an excellent feature.

Another very reliable military safety that was adapted to low scope mounting, along with a handy, fast location just behind the bolt handle, was found on the Model 1917 Enfield. That safety rocked forward to FIRE position by a simple push of the thumb, and when it was rocked back to the OFF position a hook grabbed a notch in the side of the cocking piece on the striker rod and pulled it to the rear to disengage the sear and leave the trigger free. Remington carried this design over to the Model 30 sporter based on the Enfield action. Few modern safeties are as fast and reliable.

The modern version as found on the newer Model 700 Remington has the same handy location and is fast to operate, but it *does not* lock the striker; it simply blocks release of the trigger. Should something happen within the trigger

(Continued on page 63)

ADVERTISERS INDEX

Atkinson Gun Company	47	MTM Molded Products	40
Birchwood Casey	42	Marquart Precision Company	52
E.C. Bishop & Son, Inc.	46	McGowen Rifle Barrels	45
John Bivins, Gunstocker	41	Frank Mittermeier, Inc.	41
Brown Precision Company	60	Numrich Arms	62
Lenard M. Brownell Custom Rifles	44	Oehler Research	6
Bushnell Optical Company	53	Omark Industries	7, 67
C-H Tool & Die Corporation	47	Pacific Tool Company	9
Canjar Manufacturing Company	42	Padco Enterprises	44
Complete Gunsmithing Service	45	Paul's Precision Gun Works	42
Conetrol	45	Bob Pease Accuracy	47
Corbin Mfg. & Supply Co. Inc.	14	Peterson's Labels	56
Custom Chronograph	57	Pyrodex Corporation	61
Data-Targ (Rocky Mtn. Target Co.)	60	Ranging, Inc.	52
Clarence N. Davis (fiberglass stocks)	62	Remington Arms	10, 11
Bill Dowtin Custom Rifles	42	Ray Riling Arms Books	47
Electronic Trigger Systems	51	Rifle Back Issues	58
Geo Brothers	41	Binders	50
Golden Eagle Firearms	17	Brassards	46
The Gun Shop	60	Bumper Stickers	59
Handloader Press	48	Subscriptions	63
H-S Engineering Company	43	Schmidt-Weston Company	40
Hodgdon Powder Company	6	R.G. Sherer/Schutz Bros., Inc	51
Hornady Mfg Company	15	Stoeger Industries	5
Hudson Sporting Optics	16	Sturm, Ruger & Co., Inc.	3
Huntington's Sportsman's Shop	49	Weatherby, Inc.	2
Hutton Rifle Ranch	43	W R Weaver Company	13
Indian Ridge Traders	62	Cecil Weems, Custom Gunbuilder	45
Jet-Aer Corporation	41, 45	Frank R. Wells Custom Guns, Inc.	62
J. Korzinek, Riflesmith	47	Whitney Sales, Inc.	51
Lazy-X Reloader's Notebook	57	Wichita Engineering & Supply, Inc.	43
Winchester-Western	68		

CONFIDENTIAL-SUBJECT TO PROTECTIVE ORDER
KINZER V. REMINGTON
BARBER - PRESALE R 0129484
R2530472

BARBER - PRESALE R 0129485

the bedding the next time around? Not doing so would allow pulling down on a part of the action that has no support directly under it and would seem to impart bending stresses on the action detrimental to accuracy.

Dr. James J. Venier
Southfield, Michigan

The Sako Vixen is nothing but a baby Mauser, and the bedding should be approached in the same manner as any Mauser action. Dave Hull, a pioneer bench rest shooter, and holder of many world records and National Championships, once told me that there are two ways to bed a Mauser so it would shoot. One is to bed it loose everywhere except at the normal bearing points, and the other is to bed it so tight that it can't move at all (he also said he hadn't been able to figure out how to get one that tight).

I would bed the Sako exactly as the Ruger bedding described in the article in Rifle No. 55; that is, contact should be allowed only on the back side of the recoil lug, the flat back of the recoil lug, and the bottom of the rear tang. Also, the back one inch or so of the barrel should be bedded for about one-third of its diameter. All other areas should be taped to allow clearance so the guard screw tension is applied only to the bedding points. I have a Sako Vixen with a fairly heavy match grade barrel that was bedded in this manner several years ago. I used it for a couple of years as a bench rest rifle, and it still shoots very well

You mentioned the possibility of stressing the action with the front guard screw if the bedding is relieved under the recoil lug. This doesn't seem to happen, but it is important that this relief be provided. I've seen this proven too many times to be a doubter any longer.

Finally, even the short, stiff rear tang on the Vixen can be warped if the guard screws are used to horse the action down into the bedding compound. Leave enough room around the edges so the compound can squeeze out and the action can be pressed into place without a lot of pressure. If a Sako is properly bedded in this manner, and it still won't shoot, then I'd start looking for some other cause.

Bob Brackney

ANSWERS POLICY

We will be pleased to ask the members of the staff to answer your questions. However, due to their heavy volume of correspondence we must ask that you enclose two dollars and a stamped, self-addressed envelope to partially defray the cost of researching and writing each answer. Please limit each letter to one specific question, for many general questions require a lengthy article to answer adequately, and cannot possibly be answered in a letter. Questions should be addressed to Aiming for Answers, *Rifle Magazine*, P.O. Box 3030, Prescott, Arizona 86302.

Trophy Pointers

(Continued from page 60)

mechanism to cause the safety device to malfunction, the striker is free to fall with the safety in the ON position. Nearly all of the adjustable triggers found on Mauser-type actions, as well as most of the custom adjustable triggers, function on the same principle. They are handy, they are fast, they are quite reliable and cause few accidental discharges — but they do not lock the striker.

Trigger guard safeties, either at the front or rear of the guard, become handy with a little practice and use, but completely safe they *are not*. I prefer the button be located at the front of the guard because there is less danger the trigger finger will accidentally push it to the release position when holding the gun at "ready" position. But even if this does not occur, there is a fair chance that the button will be pushed to OFF by pressure from the arm, clothing or what have you. It is also possible that if the gun is accidentally dropped solidly onto the butt, the jar will cause the safety to release and activate the trigger at the same time, causing an accidental discharge. This will not happen with *all* actions, either rifle or shotgun with trigger guard safeties, but it will happen with some, especially after extended use. This is not just theory; I've experimented with unloaded guns and found that at least some will release the striker when banged down hard on the butt with the safety on.

As far as speed of operation is concerned, many hunters prefer the shotgun-type tang safety to all others. I agree that they are fast, but to me no faster than the location on the right side just to the rear of the bolt handle. They really shine for the left-handed hunter, regardless of the type of action used. But there are a couple of disadvantages to the tang safety that are not always apparent under certain conditions. To be quick and sure, the tang safety should have a release button that is rough and high enough to afford a sure grip even during cold weather with heavy gloves. But if this feature is present, as on the Model 77 Ruger, and the rifle is chambered for a magnum cartridge, the recoil can tear hell out of your bare thumb if you wrap it around the grip. Some tang safeties are located far enough forward that this does not happen, the Savage Model 99 for example, but that safety button is low and quite smooth, not easy to release with gloves on.

Then there is the safety on the Savage Model 110 that snuggles down in the grooved tang. No danger of bumping your thumb on that one, but there is a great deal of danger you will not be able to release it when wet snow or rain forms ice on and around it, or with gloves on even if there is no ice.

There is also the type of safety found on a few bolt actions that do not lock the bolt. This can put you in a bad position if the bolt is raised fully or partially when you are hunting with a chambered cartridge. You release the safety, pull the trigger and nothing happens, except that the game may vanish before you figure out what's wrong. It could also prove fatal when hunting dangerous game!

There are other types of safeties not covered here, but most work along the same lines. This does shed some light on the good and bad features of those that are most commonly used, and why they are or are not reliable under certain conditions.

There are some rather startling ideas advanced by various hunters concerning the use of rifle safeties — some hunters apparently have no use for one, while others depend on them when they shouldn't. And after you spend enough time watching hunters in the hunting country, some of their ideas on rifle safety, as well as safeties, make you a little nervous. Some of them can lead them, and you, into plenty of trouble. We'll look at these in another column.

DON'T MISS AN ISSUE

If your magazine stand is give you sold out of Handloader or Rifle copies before you get yours a subscription will assure that you receive each valuable edition. (Each magazine is a bi-monthly). Be sure to check term of subscription and send a check payable in U.S. currency.

(Rates in bold are U.S. & Possessions and Canada. All other subscriptions are "Foreign")

HANDLOADER

- ☐ 3 years $17.00 (Foreign $20.00)
- ☐ 2 years $13.00 (Foreign $15.00)
- ☐ 1 year $7.75 (Foreign $9.00)

RIFLE

- ☐ 3 years $17.00 (Foreign $20.00)
- ☐ 2 years $13.00 (Foreign $15.00)
- ☐ 1 year $7.75 (Foreign $9.00)

Name _____

Street _____

City _____

State _____ Zip _____

Country _____

Check enclosed for $ _____ U.S. Currency payable to

Wolfe Publishing Co., Inc.
P.O. Box 30-30
Prescott, Arizona 86302 USA

CONFIDENTIAL-SUBJECT TO PROTECTIVE ORDER
KINZER V. REMINGTON
BARBER - PRESALE R 0129485
R2530473

WE APPRECIATE ANY HELP YOU CAN GIVE US

cc: R. L. Hall
F. Millener
M. Walker/J. Brooks
F. E. Morgan

May 18, 1973

P. Velasco

Model 700 and Model 541 Firearms
AUSTRALIA

In respect to the above models, the present trigger assembly is not suitable for the Australian market.

Modifications have been made to these products held in the Customs warehouse in Australia. Therefore, you are requested to initiate a procedure whereby our orders for Australia for these models indicate that modifications must be made to these firearms prior to shipment.

By copy of this letter we are requesting that a procedure be set up at Ilion to handle this correction. John Brooks at Ilion is familiar with the requirements and initiated the instructions for making this repair.

I believe this can be handled in the same manner as we installed the orifice control screw for the Model 1100.

Your comments will be appreciated.

E.S.Cipcer/ajf

E. S. Cipcer

cc: M. H. Walker/J. Brooks
F.Millener

May 21, 1973

TO: E. S. CIPCER
FROM: F. E. MORGAN

It will be the International Department's responsibility as of this date, to mark all Australian M/700 and M/541 orders forwarded to Ilion " See M. H. Walker, as guns must be modified before shipping."

F. E. Morgan

F. E. Morgan

FEM/bc

WE APPRECIATE ANY HELP YOU CAN GIVE US

cc: R. L. Hall
F. Millener
M. Walker/J. Brooks
F. E. Morgan

May 18, 1973

P. Velasco

Model 700 and Model 541 Firearms
AUSTRALIA

In respect to the above models, the present trigger assembly is not suitable for the Australian market.

Modifications have been made to these products held in the Customs warehouse in Australia. Therefore, you are requested to initiate a procedure whereby our orders for Australia for these models indicate that modifications must be made to these firearms prior to shipment.

By copy of this letter we are requesting that a procedure be set up at Ilion to handle this correction. John Brooks at Ilion is familiar with the requirements and initiated the instructions for making this repair.

I believe this can be handled in the same manner as we installed the orifice control screw for the Model 1100.

Your comments will be appreciated.

E.S.Cipcer/ajf

E. S. Cipcer

cc: M. H. Walker/J. Brooks
F.Millener

May 21, 1973

TO: E. S. CIPCER
FROM: F. E. MORGAN

It will be the International Department's responsibility as of this date, to mark all Australian M/700 and M/541 orders forwarded to Ilion " See M. H. Walker, as guns must be modified before shipping."

F. E. Morgan

F. E. Morgan

FEM/bc

cc: R. L. Hall
F. Millener
M. Walker/J. Brooks
F. E. Morgan

May 18, 1973

P. Velasco

Model 700 and Model 541 Firearms
AUSTRALIA

In respect to the above models, the present trigger assembly is not suitable for the Australian market.

Modifications have been made to these products held in the Customs warehouse in Australia. Therefore, you are requested to initiate a procedure whereby our orders for Australia for these models indicate that modifications must be made to these firearms prior to shipment.

By copy of this letter we are requesting that a procedure be set up at Ilion to handle this correction. John Brooks at Ilion is familiar with the requirements and initiated the instructions for making this repair.

I believe this can be handled in the same manner as we installed the orifice control screw for the Model 1100.

Your comments will be appreciated.

E.S.Cipser/aif

cc: E. S. Cipcer
H. D. Albaugh
W. E. Leek

RECEIVED
APR 25 1973
INTERNATIONAL SALES

LETTER TO M. WALKER

Ilion, New York
April 24, 1973

F. E. MORGAN
Bridgeport

AUSTRALIAN 700 and 541 TRIGGER ADJUSTMENTS

John Brooks has worked out a method of using two screws, one behind the other, for locking the engagement and trigger adjusting screws in the 700. We can supply the parts to Australia if they will accept the method. We need to know how many parts are needed, if the method is acceptable to them, and will they take on the job of installing the screws and making the trigger adjustments required.

On the 541 a longer screw can be supplied with a lock nut for the engagement, but no good method has been generated for locking the trigger adjusting screw due to the interference of the bolt stop release mechanism. A lock nut on the front of the 541 trigger housing would require a redesign of the bolt stop release member to allow room for a nut. The trigger adjusting screw hole in the trigger housing is too shallow for the double screw system. The same is true for the engagement screw at the rear.

We are planning a permanent sealant over the screws in the 700 for regular production. One method was suggested by one of the adhesive manufacturers but the material, an epoxy, only has a 5-minute pot life. A second sealant is on order, which is a single solution type, that may be more acceptable to production.

MHW

M. H. Walker
Ilion Research Division

MHW/nl

RD-69 REV. 6-56

REMINGTON ARMS COMPANY, INC.

INTER-DEPARTMENTAL CORRESPONDENCE

Remington

cc: E. Hooton, Jr.
E. F. Barrett

Bridgeport, Connecticut
April 27, 1977

D. W. BUNNING
C. W. DOERTER
A. J. HERMANDORFER
J. O. PRESTON, JR.
(3) R. L. HALL – File
G. E. PUCKETT

PRODUCT RECALLS

The enclosed Conference Board booklet on product recalls is furnished for your information and use.

Of course, Remington already has a product recall procedure, which is set forth in How Book, Part 4, Item 2102. Furthermore, as indicated in that procedure, firearms and ammunition are exempt from the reporting requirements of the Consumer Product Safety Act. Nevertheless, this booklet contains some good articles on the subject of product liability which might interest you.

R A Partnoy

R. A. Partnoy

RAP:CK
Enclosure

J P Linde

RD-69 REV. 5-58

REMINGTON ARMS COMPANY, INC.

INTER-DEPARTMENTAL CORRESPONDENCE

Remington

cc: J. G. Williams

Bridgeport, Connecticut
July 16, 1976

TO: E. F. BARRETT
W. E. LEEK
J. D. MITCHELL
F. E. MORGAN
H. D. ALBAUGH

FROM: L. J. SCOTT LJS

SUBJECT: VISIT WITH JIM CARMICHAEL

This is to confirm arrangements that have been made with Jim Carmichael to visit with us at Ilion on Monday, July 26. The purpose of Jim's visit will be to review our Bolt Action Center Fire Rifle line and to hear what Jim has to say concerning design features and styling for these rifles in general and our Model 700 in particular.

There will be time following our session to give Jim a brief tour of the plant, as well as a visit to Wayne Leek's range.

Our schedule will be as follows:

Leave Bridgeport Airport in Company plane at 7:30 A.M.

Meeting at Ilion Plant	-	9:15 - 12:00 Noon
12:00 - 1:00 P.M.	-	Lunch
1:00 - 2:00 P.M.	-	Plant Tour
2:00 - 3:30 P.M.	-	Wayne Leek's Shooting Range
4:30 P.M.	-	Leave Utica airport for return trip.

REMINGTON ARMS CO.
RECEIVED
JUL 19 1976
ILION RESEARCH DIVISION

LJS/mcj

7/21/76 [illegible]
Go [illegible] & drive [illegible] Oneida [illegible] to Airport
Ly 8:30 AM, T. [illegible] 7/26
[illegible] for use [illegible]

Remington

REMINGTON ARMS COMPANY, INC.

PETERS

MANUFACTURERS OF
SPORTING FIREARMS, AMMUNITION

SPORTING FIREARMS, TRAPS, ILION, NEW YORK
AMMUNITION, BRIDGEPORT, CONNECTICUT
LONOKE, ARKANSAS
CABLE—HARTLEY, BRIDGEPORT
TELEX: 964-201 STRATFORD, CONN.

TRAPS TARGETS

BRIDGEPORT, CONNECTICUT 06602

PETERS CARTRIDGE DIVISION
BRIDGEPORT, CONNECTICUT
TARGETS, FINDLAY, OHIO
ADA, OKLAHOMA
ATHENS, GEORGIA

September 13, 1976

4/7/76
Skeet issue & Bt.
[illegible]

REMINGTON ARMS CO.
RECEIVED
SEP 16 1976
LEGAL RESEARCH DIVISION

Mr. Jim Carmichel
P. O. Box 1697
Prescott, Arizona 86301

Dear Jim:

Many thanks for sending us your sketch of a stock for the Model 700. I have passed copies along to Wayne Leek so that he and his staff can take a close look at what you are suggesting.

We all appreciate the time and interest you have put into this review and we will be back in touch with you after our Research staff has had an opportunity to progress further with their thinking.

Sincerely,

L. J. Scott

L. J. Scott, Director
Product & Market Planning

LJS:lcy

bcc: E. F. Barrett
W. E. Leek
J. D. Mitchell
F. E. Morgan
H. D. Albaugh

Note: Design sketch copies have been sent to F. E. Morgan and W. E. Leek.

G-88

DON'T SAY IT — WRITE IT

To E. HOOTON, JR.

Date November 17, 1978

From R. L. HALL

LATEST COUNTS ON TRICK TESTS

	Total	Failed Test No.	Failed Test %
M/600 Wholesaler's guns returned from Texas in 1975	615	342	56%
M/700 Returns to Arms Service 6/13/78 to 11/16/78	625	6	1%
XP-100 In Ilion Warehouse-Nov. 1978 (Warehouse has been cleared)	243	1	0.4%

RLH:ah

SAFETY IS A WISE INVESTMENT

BARBER - PRESALE R 0129494
R. L. Hall

Ilion

NEWS

Remington® DUPONT REMINGTON ARMS COMPANY, INC. • PUBLIC RELATIONS • BRIDGEPORT, CONNECTICUT 06602

RELEASE

FOR RELEASE IMMEDIATELY

Bridgeport, CT, September 9, 1980--Remington Arms Company, Inc., has found that a quantity of 7mm Express Remington cartridges, manufactured in August, 1979, may produce higher than normal pressures that could cause damage to some firearms. It is also possible that fired cases from this ammunition could be adversely affected, and, therefore, should not be reloaded.

Accordingly, the Company is recalling all 7mm Express Remington cartridges that were manufactured during August, 1979. These cartridges may be identified by the following markings on the package:

Caliber:	7mm Express Remington
Bullet:	150-gr. Pointed Soft Point "Core-Lokt"
Index No.:	R7M061 (on outside of end flap)
Lot Nos.:	M02I or M03I or M06I or M07I or M08I or M09I or M13I

Lot numbers are printed on the inside of the package's end flap. Consumers who have purchased any 7mm Express Remington ammunition since August, 1979, marked with these lot numbers are cautioned not to use it, and to return unused cartridges and fired cases to:

Remington Arms Company, Inc.
Attention: J. H. Chisnall
939 Barnum Avenue
Bridgeport, Connecticut 06602

- MORE -

CONFIDENTIAL-SUBJECT TO PROTECTIVE ORDER
KINZER V. REMINGTON

BARBER - PRESALE R 0129494 R2530482

for prompt, no-charge replacement. Shipment should be made "collect" via United Parcel Service.

Wholesalers and dealers are being asked to put an immediate hold on all 7mm Express Remington cartridges with these lot numbers in their inventories. Remington representatives will be in contact with them to arrange for return of this product.

###

Contact: E. S. McCawley, Jr. - (203) 386-3072
R. F. Dietz - (203) 386-3026

9/9/80

PD-69 REV. 6-59

REMINGTON ARMS COMPANY, INC.

INTER-DEPARTMENTAL CORRESPONDENCE

Remington

cc: J. G. Williams
J. E. Preiser
W. H. Forson
T. W. Rawson
D. J. Sanita

Copies to RLHall
H.K Boyle
1-16-81

Bridgeport, Connecticut
January 14, 1981

TO: J. P. GLAS

FROM: P. H. HOLMBERG

SUBJECT: STATUS OF RECALL
MODEL 3200: INSUFFICIENT HEAT TREATMENT OF HAMMERS

This Model 3200 recall involved a total of 305 guns and a quantity of replacement hammers purchased as parts.

As of 1/13/81 the status is as follows:

- All replacement hammers purchased as parts have been accounted for and have been either replaced or credit has been issued.

- 104 guns have been returned for our correction. Thus we have received for correction 34% of the recall guns. The corrective action being taken by Arms Service has resulted in an average repair time of less than one week. We are therefore, well within our timing committment of "as soon as possible but not later than three weeks after it is received."

To date the recall has been highly successful. Our percentage return is high considering that initial contact was made only two months ago and that this time period included the holiday/vacation season. Returns are being received on a regular basis; three guns were received yesterday. Because of our continuing success of the recall, no extraordinary efforts will be taken until a significant lapse in gun returns are noted or six additional weeks have passed (3/1/81). At that time a second contact will be made via registered mail. This contact will be appropriately cleared prior to release.

Status reports will be issued on a monthly basis until the conclusion of the recall.

Paul

PHH:daf

RLH

C-88 ~~Harvey~~ DON'T SAY IT—*WRITE IT*

To J. H. Carter

From N. J. Zanetta

Date 1/9/81

M/3200 Hammer Recall Returns to date

98

"SAFETY RULES ARE PERFECT TOOLS"

SALES DEPARTMENT

Remington

Rem-O-Gram

Quick Facts About REMINGTON PRODUCTS

E. Hooton, Jr.

Adm. Bldg.

cc: House Force

Bridgeport, Connecticut
November 20, 1980

TO THE FIELD FORCE

LIMITED MODEL 3200 RECALL

We have been notified by Ilion that a quantity of hammers that lacked sufficient heat treatment have been installed in some Model 3200 shotguns. Without proper heat treatment, the hammers will eventually wear and cause a safety related problem. We are asking that the guns not be used and that they be returned for our correction.

The Model 3200's that are suspect include:

- New guns produced from 6/1/80 - 9/30/80, including the Four Barrel Sets.
- Old guns returned to Ilion for repair from 3/1/80 - 9/30/80.
- Guns that received new hammers from the Remington gunsmiths at the Ohio, Pennsylvania, and the Grand (Trap guns only).
- Replacement hammers purchased as parts from 3/1/80 - 9/30/80.

Region managers were notified of the specific distributor shipments made to their region.

We felt you should be aware of this recall. Questions pertaining to the recall can be directed to Earl Larson.

Sincerely,

E. J. Conroy
Director of Sales

RECEIVED
NOV 25 1980
E. HOOTON, JR.

EJC:PHH:daf

REMINGTON ARMS COMPANY, INC., BRIDGEPORT 2, CONN.

Form No. RD 451

Printed in U.S.A.

CONFIDENTIAL-SUBJECT TO PROTECTIVE ORDER
KINZER V. REMINGTON

SALES DEPARTMENT

Remington

Rem-O-Gram

Quick Facts About REMINGTON PRODUCTS

Bridgeport, Connecticut
May 6, 1981

TO THE FIELD FORCE:

R38S12 RECALL

Attached is a copy of a Public Relations' release concerning the recall of the above ammunition. This is being supplied to you so that you will be able to properly answer any inquiries you receive from customers, distributors, or dealers.

Sincerely,

E. J. Conroy

E. J. Conroy
Director of Sales

EJC/ds

Att.

IMMEDIATELY

Bridgeport, Ct., May 6, 1981 - Remington Arms Company, Inc., has found that the cases of a quantity of 38 special cartridges, manufactured in July, 1980, may separate at the case cannelure with the result that a part of the case could lodge between the cylinder and the barrel of a revolver. This could damage the gun or cause it to malfunction. While the possibility of a personal injury is unlikely, any obstruction in a gun barrel should be considered potentially dangerous.

Accordingly, the Company is recalling those 38 special cartridges which have the following identification markings on the packages:

Caliber:	38 Special
Bullet:	158 grain lead hollow point +P
Index No.:	R38S12 (on outside of end flap)
Lot Nos.:	P28A and P29A

Lot numbers are printed on the inside of the end flap on the package. Those who have purchased any 38 special ammunition since July, 1980, marked with these lot numbers, are cautioned not to use it, and to return any unused cartridges to:

Remington Arms Company, Inc.
Attention: J. H. Chisnall
939 Barnum Avenue
P. O. Box #1939
Bridgeport, Conn., 06601

Shipment should be made "collect" via United Parcel Service. The returned cartridges will be replaced promptly at no charge.

Wholesalers and dealers are being asked to put an immediate hold on all 38 special cartridges with these lot numbers in their inventories. Remington representatives will be in contact with them to arrange for return of this product.

# # #

Contact: E. S. McCawley, Jr. (203) 386-3072
R. F. Dietz (203) 386-3026

5/81

CONFIDENTIAL-SUBJECT TO PROTECTIVE ORDER
KINZER V. REMINGTON

RD-69 REV. 6-58

REMINGTON ARMS COMPANY, INC.

INTER-DEPARTMENTAL CORRESPONDENCE

Remington DUPONT

cc: House Force

Bridgeport, Connecticut
May 14, 1981

TO: Area Managers
Regional Managers
Field Force

FROM: E. J. Conroy

SUBJECT: 38 SPECIAL R38S12 RECALL

Attached is a copy of a Mailgram sent to all customers who have received shipments of this product.

In addition, Bridgeport is contacting by telephone each customer involved, and we have learned that some of the ammunition is in the hands of dealers and, possibly, consumers. We also asked the distributors to contact these dealers, and have them hold all of their stock.

As a necessary follow-up, will each of you call on your distributors immediately, and be sure their stock is returned at our expense to:

Remington Arms Company, Inc.
Attn: J. H. Chisnall, Sr.
939 Barnum Avenue
Bridgeport, Connecticut 06601

Secondly, wherever possible, obtain a listing of all dealers who have received shipments from that wholesaler. Include name, address, telephone number, and quantity. Immediately call these dealer lists in to J. H. Chisnall.

We may need your assistance in notifying dealers. You will be advised if this is necessary at the time the list is called in to J. H. Chisnall.

Your fullest cooperation is requested.

E. J. Conroy

E. J. Conroy

EJC:fms
Attach.

MAILGRAM CUSTOMERS

URGENT

We have found that the cartridge case of a quantity of 38 Special cartridges, Index Number R38S12, manufactured in July, 1980, may separate at the case cannelure with the result that a part of the case could lodge between the cylinder and the barrel of a revolver. This could damage the gun or cause it to malfunction.

While the possibility of a personal injury is unlikely, any obstruction in a gun barrel should be considered potentially dangerous.

We are recalling this ammunition, and ask that you place an immediate hold on all 38 Special 158 grain Lead Hollow Point +P, our Index Number R38S12, in your stock bearing the following lot numbers that are printed on the inside of the end flap or the outside of the shipping case:

P28A P29A

Our representatives will contact those customers our records show received shipment of this product.

REMINGTON ARMS CO., INC.
E. J. Conroy - Director of Sales
May 14, 1981

NEWS RELEASE

Remington. DUPONT REMINGTON ARMS COMPANY, INC. • PUBLIC RELATIONS • BRIDGEPORT, CONNECTICUT 06602

FOR RELEASE IMMEDIATELY

Bridgeport, Conn., October 13 -- Remington Arms Company, Inc., today announced the recall of defective 7mm Express Remington cartridges which were manufactured in September and October of 1979.

Remington said the defective cartridges may produce higher than normal pressures which could damage some firearms, and which, under some circumstances might cause personal injury. The company also recommended that fired cases from the ammunition not be reloaded because of possible adverse effects.

The 7mm Express Remington cartridges covered by the recall have the following markings on the packages:

Caliber:	7mm Express Remington
Bullet:	150 gr. Pointed Soft Point "Core Lokt"
Index No.:	R7M061 (on outside of end flap)
Lot Nos.:	M20F through M29F and M010 through M110 (on inside of end flap).

Remington said it recalled several other lots of 7mm Express Remington cartridges in September 1980 because of a similar problem. The lots, which were manufactured in August 1979, were: M02I, M03I, M06I, M07I, M08I, M09I, and M13I.

The company said it is informing wholesalers and dealers to withhold from sale all 7mm Express Remington cartridges in their inventories which bear lot numbers from both recalls. Remington representatives will make arrangements for return of the cartridges.

Consumers who have purchased 7mm Express Remington ammunition since October 1979, bearing any of the lot numbers, should return the unused cartridges and fired cases for free replacement. They should be sent collect via United Parcel Service to:

Remington Arms Company, Inc.
Attention: J. H. Chisnall
939 Barnum Avenue
P. O. Box #1939
Bridgeport, Conn., 06601

# # # #

Editorial Contact: E. S. McCawley, Jr. - (203) 386-3072
R. F. Dietz - (203) 386-3026

10/13/81

R. L. Hall

Ilion

RD-69 REV. 6-58

REMINGTON ARMS COMPANY, INC.

INTER-DEPARTMENTAL CORRESPONDENCE

Remington DUPONT

cc: House Force

Bridgeport, Connecticut
October 12, 1981

TO: Area Managers
Regional Managers
Field Force

FROM: E. J. Conroy

SUBJECT: 7MM EXPRESS REMINGTON RECALL

Attached is a copy of a Mailgram sent to all customers who have received shipments of this product.

In addition, Bridgeport is contacting by telephone each customer involved, and we have learned that some of the ammunition is in the hands of dealers and, possibly, consumers. We also asked the distributors to contact these dealers, and have them hold all of their stock.

As a necessary follow-up, will each of you call on your distributors immediately, and be sure their stock is returned at our expense to:

Remington Arms Company, Inc.
Attn: J. H. Chisnall, Sr.
939 Barnum Avenue
Bridgeport, Connecticut 06601

Secondly, wherever possible, obtain a listing of all dealers who have received shipments from that wholesaler. Include name, address, telephone number, and quantity. Immediately call these dealer lists in to J. H. Chisnall.

We may need your assistance in notifying dealers. You will be advised if this is necessary at the time the list is called in to J. H. Chisnall.

Your fullest cooperation is requested.

E. J. Conroy

E. J. Conroy

EJC:fms
Att.

MAILGRAM CUSTOMERS

URGENT

We have found that a quantity of 7mm Express Remington cartridges, Index Number R7M061, produced in September and October of 1979, may produce higher than normal pressures that could damage a firearm. In addition, fired cases may be adversely affected, and they should not be reloaded.

We are recalling this ammunition, and ask that you place an immediate hold on all 7mm Express Remington ammunition in your warehouse bearing the following lot numbers that are printed on the inside of the end flap, or the outside of the shipping case:

M20F, M21F, M22F, M23F, M24F, M25F, M26F, M27F, M28F, M29F,

M010, M020, M030, M040, M050, M060, M070, M080, M090, M100,

M110

In September, 1980, we recalled several lots of 7mm Express Remington cartridges due to a similar problem. These lots bear the following lot numbers:

M02I, M03I, M06I, M07I, M08I, M09I, M13I

Our representatives will contact those customers which our records show received shipment of this product.

Remington Arms Company, Inc.
E. J. Conroy, Director of Sales
October 12, 1981

EJC:fms

RD-69 REV. 6-58

REMINGTON ARMS COMPANY, INC.

INTER-DEPARTMENTAL CORRESPONDENCE

Remington
DUPONT

cc: J. G. Williams
J. E. Preiser
E. J. Conroy
~~R. L. Hall~~
R. B. Sperling
E. J. Giner

Bridgeport, Connecticut
January 31, 1980

TO: E. F. BARRETT

FROM: P. H. HOLMBERG

SUBJECT: LIMITED MODEL 700 RECALL

Per our discussion, immediate action was taken to recover the 348 Model 700 rifles suspected of having an improperly plated sear safety cam.

Initial contacts have been made to regional offices or managers as was appropriate. Distributors are being advised to return the product for replacement product or to supply us with information pertaining to the sale of this product from their inventory. Since the product was shipped during the period January 7-11, we are optimistic of recovering the guns prior to any actual shooter exposure. A status report will be issued within two weeks.

The distributors and guns involved are:

Remington Arms (GmbH)
20-#5760 M/700 ADL .222 Rem.

Remington Arms (Ltd.)
30-#5791 M/700 BDl .270 Win.

Bob Ward & Sons, Inc.
5-#5791 M/700 BDL .270 Win.

Bonitz Brothers
5-#5770 M/700 ADL .270 Win.

Jerry's Sport Center (PA)
145-#5791 M/700 BDL .270 Win. 5-#5770 M/700 ADL .270 Win.

Walter Craig, Inc.
10-#5791 M/700 BDL .270 Win.

Whitney Sporting Goods Co.
45-#5791 M/700 BDL .270 Win.

Maurice Sporting Goods
10-#5770 M/700 ADL .270 Win.

Western Hoegee Company
5-#5827 M/700 VAR 6mm Rem.

Monroe Hardware Company
10-#5791 M/700 BDL .270 Win.

Goudeau, Inc.
5-#5770 M/700 ADL .270 Win.

Graf & Sons, Inc.
5-#5770 M/700 ADL .270 Win.

Central Sales Corp.
10-#5791 M/700 BDL .270 Win.

Don Tate
1-#5770 M/700 ADL .270 Win.

Gopher Shooters Supply
1-M/700 D Grade 25/06

Maritz, Inc.
1-#5791 M/700 BDL .270 Win.

5-#5762 M/700 ADL .22-250 Rem.

5-#5770 M/700 ADL .270 Win.

10-#5791 M/700 BDL .270 Win.

10-#5864 M/700 CLASSIC .270 Win.

5-#5760 M/700 ADL .222 Rem.

PHH:daf

Paul

~~E. HOOTON, JR.~~

RD-69 REV. 6-71

REMINGTON ARMS COMPANY, INC.

INTER-DEPARTMENTAL CORRESPONDENCE

Remington

DU PONT

WDH 1. WH 2. RLH.

Bridgeport, Connecticut
January 28, 1980

TO: E. F. BARRETT

FROM: T. W. RAWSON

SUBJECT: M700 SEAR SAFETY CAM

Reference our phone conversation on the above subject. Production has determined that a quantity (350) of M700 rifles has been shipped with defective sear safety cam plating.

The plating defect, when combined with all metal parts of the fire control and bolt assembly in a non-lubricated condition can cause the striker to hang up when the trigger is pulled. Because enough movement of the internal trigger parts does occur a subsequent blow or knock to the firearm will cause it to fire.

Even though the odds of such a combination are slight, we are instituting, with Marketing's assistance, a recall on these firearms.

The approximate 350 rifles were shipped in early January and it is felt the odds are good that most or all will be retrievable. We will advise of progress.

TWR/kw

RECEIVED
JAN 29 1980
E. HOOTON, JR.

Alison - Pls file (Recall file)

M/700 SEAR SAFETY CAM
POOR CHROME PLATE
FAILS TO FIRE--JARS OFF

CONDITION:

Poor chrome plating on the Sear Safety Cam (Sear). If the chrome is missing from the Firing Pin Head Contact angle on the Sear a fails-to-fire condition is present, i.e. the Trigger is pulled but the Sear will not drop to release the Firing Pin. The Trigger and Connector cannot relatch under the Sear and when the Bolt Handle is touched or the gun jarred, it fires.

CAUSE:

Lack of chrome on the contact area raises the coefficient of friction between the two parts. The fails-to-fire condition has only been demonstrated in dry cycle testing when the Sear and Firing Pin Head are degreased and oxide (so called red rust) is formed which further increases the coefficient of friction. When only small amounts of lubrication are applied the condition is cured.
NOTE: R&D tests of chromed (good) Sears, degreased and dry cycled, indicates the condition exists in the as-designed condition.

CHECK:

The parts are checked with cold blue - if they color they are considered defective.

WHEN DISCOVERED:

The initial condition was discovered on January 10, at the sub-assembly operation.

CORRECTIVE ACTION:

1. Held warehouse for January 4, 5, 6, 7, 8, 9, 10 & 11. Guns have been shipped.

2. Marked screened guns with "S" on label.

3. Assembly, test. Pack areas screened

4. Warehouse being screened

5. Quackenbush - the plater, is being contacted.

6. Controls of plate are being reviewed.

7. 347 questionable guns shipped.

CONFIDENTIAL-SUBJECT TO PROTECTIVE ORDER
KINZER V. REMINGTON

Ilion, New York
January 15, 1980

M/700 SEAR SAFETY CAM
POOR CHROME PLATE

CONDITION:

When the Trigger is pulled, the Firing Pin will not always fall if red rust exists on the Sear Safety Cam surface which contacts the Firing Pin Head. This condition would not happen until the rifle has been cycled a number of times.

CAUSE:

Parts stripped for repair

Parts missed chrome plate operation, and/or had a poor plate. The chrome plate reduces the coefficient of friction and plates the part to stop rusting.

CHECK:

The parts are checked with cold blue - if they color they are considered defective.

WHEN DISCOVERED:

The initial condition was discovered on January 10, at the sub-assembly operation.

CORRECTIVE ACTION:

1. Held warehouse for January 4, 5, 6, 7, 8, 9, 10, & 11. Guns have been shipped.
2. Marked screened guns with "S" on label.
3. Assembly, test. Pack areas screened.
4. Warehouse being screened.
5. Quackenbush - the plater, is being contacted.
6. Controls of plate are being reviewed.

1702 were checked. Still have 351. 538 were bad.

R+D has 5 samples which they are testing

JPL:hf

control of parts going to Quackenbush.

Investigate alternate sources of supply.

G-88

DON'T SAY IT—*WRITE IT*

To ~~J. H. Carter~~ Robert

From ~~J. J. Smith~~

Date 4/7/80

M/700 Recall figures received to date

327

Outstanding - 21

"SAFETY RULES ARE PERFECT TOOLS"

RD 99-B

REMINGTON ARMS COMPANY, INC.

INTER-DEPARTMENTAL CORRESPONDENCE

Remington DUPONT PETERS DUPONT

"CONFINE YOUR LETTER TO ONE SUBJECT ONLY"

Ilion, New York
October 26, 1978

RECALL OF MOHAWK 600 RIFLES

UPDATED STATUS

Trigger Assembly

The main consideration on the Trigger Assembly is that they are assembled, and safety checks are performed to insure that a safe reliable Trigger Assembly is shipped to the gunsmith. Presently, the Trigger Assembly is a separate operation and the unit is transferred to the Final Assembly area, where the final assembler assembles it to the Barrel Action.

A series of safety checks are performed at this step and the Stock is installed. Another set of checks are made - the rifle is then taken into the Gallery where the gun is tested and the safety is again checked. At the final inspection, the safety procedure is rechecked and a certain percent are audited, again checking the safety function.

In the recall of the Mohawk 600 guns, the Trigger Assemblies will be shipped directly to the gunsmiths and the subsequent safety operations that we perform at present, will have to be incorporated into our sub-assembly operation.

The Process Record and Industrial Engineering sheets have been reviewed, operation by operation. This review was performed with representatives of Research and Process Engineering who are familiar with this model. The Process Record was also clarified. Any statements in the Process Record which could be misread or misinterpreted are being rewritten and pictures and illustrations are being included.

There were a number of areas where answers were not known in the meeting on Wednesday, October 25. By today, October 26, a number of considerations have been resolved and there are very few items which have yet to be answered.

Items Covered in the Discussion:

The fit of the Connector to the Trigger was analyzed in great detail. Specifications were determined on the correct fit, with a tentative .005" max. clearance established between the Connector and the Trigger. Fitting procedure was also analyzed and the correct method to fit the Connector was determined.

Two gages (one to be made and one now being made) will check the straightness and squareness of the Connector to insure that is correct before being assembled to the Trigger.

A fixture designed and built to measure the clearance between the Sear and Connector is going to be utilized on the job, such that the clearance can be analyzed when the Safety is put in the middle or null position. In this way, every Trigger Assembly shipped to a gunsmith, will be checked for the null position, to make sure that it is on Safe and cannot be tricked. The amount of clearance when the Safety lever is in the null position, is being determined and should be completed later this afternoon.

The assembler, as with the common Trigger Plate Assembly, will identify his work with a stamp. The Trigger Assemblies will be marked with a stamp (alpha or numerical) on the back of the Trigger. In this way, any Model 600 or XP-100, can readily be checked without disassembly, to verify that it has the new Trigger Assembly.

The comparator check wasn't analyzed and the Trigger pull section of it will be revised. The correlation will be determined between what the operator gets on the assembly bench as far as Trigger pull, and what the sub-assembler gets in adjusting the Trigger pull screw. This correlation will be done so that the sub-assemblies should require no adjusting by the gunsmith.

Process for Retrofitting Customer Guns in the Field by Recommended Remington Gunsmiths:

To make sure that the new Trigger Assemblies are assembled to the rifle in the correct procedure, a complete Process Record is being developed to give the gunsmiths step-by-step instructions on the proper disassembly and assembly procedures.

Trigger Assemblies of the revised process including additional safety inspections, will be taken to Customer Repair and fitted to Model 600's, to verify the revised process.

The following considerations have come to light and answers are being determined:

On the original Trial and Pilot, the Stock reinforcing screw was interfering with the redesigned Trigger Assembly. Research is digging out all records on the Trial and Pilot on the interference, and have stated that the situation can be corrected by adjusting the soft brass screw. They are working up the process that the individual using the gun would use, that is, upsetting the screw slightly, to give the additional clearance required. They will also take pictures of the operations so that we can include them in the write-up that goes to the gunsmiths.

The Safety lever on the original Trial and Pilot also had an interference with the wood on the Stock. The levers now have been redesigned to give more clearance with the wood, but there is a potential for wood interference. Research is checking to make sure that there is an interference on a number of models, and if there is, the gunsmith will be instructed on how to rout out or clean out the area where there is an interference. It is an easily executed operation, which should not affect the program.

It should also be noted that the Mohawk 600's for a period of years, were fitted with a gold Trigger - the replacement assemblies will have the black Triggers. The original Remington 600 and 660's did not have gold Triggers, however, so the gold Triggers are definitely in the minority. This should not be a problem.

When the gunsmiths repair the recalled rifles, we will insist that they send all of the Trigger Assemblies back which are replaced. We do not want these assemblies left out in the field where the parts can be scavanged off these and cause the old Safety levers and incorrect Sears to be put into rifles which can cause problems in the future. The assemblies will be scrapped and accounted for when they are returned to Ilion.

The gunsmiths will be requested to stamp a letter or alphabetical character on the Receiver externally, where it can be seen, to identify without Stock disassembly, that the rifle has been converted to the new Trigger Assembly. Also, it would be our recommendation that the gunsmith put another stamp on the rifle, indicating at what repair station or what repairman actually modified the rifle.

To insure that all the rifles of this type in the plant, meet the required specifications, all the final assemblers, Gallery personnel, inspectors, Customer Repair checkers, Customer Repair gunsmiths, Customer Repair final inspector, 40XR or Custom Shop assemblers and XP-100 assemblers are being reinstructed on the trick test.

JPLinde:eb

RD-69-B

REMINGTON ARMS COMPANY, INC.

INTER-DEPARTMENTAL CORRESPONDENCE

Remington DUPONT PETERS DUPONT

Xc: C.B. Workman
R.L. Hall
J.R. Ayers

"CONFINE YOUR LETTER TO ONE SUBJECT ONLY"

Ilion, New York
November 1, 1978

EARL LARSON
Bridgeport

M/600 - 660 TRIGGER ASSEMBLY PARTS

We recommend sales of all Trigger Assembly components in the Models 600, 660, and Mohawk 600 be discontinued until further notice. A complete Trigger Housing Assembly should be sold or the rifle returned to Ilion where proper checks can be made if parts are replaced.

When a complete assembly is sold it should be accompanied by a note stating that no alterations or replacements should be made to the assembly.

CBW

C.B. Workman, Manager
Ilion Research Division

By John W. Brooks
J.W. Brooks, Supervisor
Manual Firearms Design

JWB:T

REMINGTON ARMS COMPANY, INC.
Bridgeport, Connecticut

c: E.B. Beattie
A.W. Bell
H.K. Boyle
E.G. Larson
J.E. Preiser
R.B. Sperling

~~EHB~~ file

IW cc to RCH pls. EH 11/1

October 30, 1978

TO: J.G. WILLIAMS
E. HOOTON
R.A. PARTNOY

FROM: E.F. BARRETT

SUBJECT: MODEL 600 RECALL - STATUS REPORT

1. Owner Notification

- Toll free message center - about 2500 calls have been received through Friday, October 27. Approximately 50% of the calls have been from Texas.

Owners and dealers have been confused by the serial number listing for the Mohawk 600 and XP-100. This is because the number series on some post 1975 guns is the same as on guns involved in the recall. Where this occurs, the letter A or B is used as a serial number prefix on post 1975 guns.

This situation will be clarified in subsequent recall advertisements and customer mailing.

Some owners have expressed concern about the timing of the gun repair and the remoteness of approved gunsmiths. It was decided to handle these complaints by setting up WATS lines in Bridgeport and Ilion, rather than expanding the information now being given by the Atlanta operators.

- Advertisements - Ads have been prepared for Hawaii and Alaska which are not covered by the Atlanta information service. We have three gunsmiths in Alaska and one in Hawaii.

Ads have been prepared for the follow-on owner notification program. Media will be selected early this week.

RECEIVED
OCT 31 1978
E. HOOTON, JR.

A dealer mailing which will include a counter poster announcing the recall and listing the guns involved is being prepared.

- Internally Developed Owner Data -

A listing by wholesaler of serial numbers for the guns involved will be complete in mid-November. This listing will cover the period 1968 to 1975. Records exist for the period 1963 to 1967 but are in such a form that their utility is questionable.

Consideration is being given to paralleling this approach by beginning to search the records of major dealers now for owner information.

2. Gunsmiths

Essentially all of the gunsmiths on the recommended list have agreed to participate in the recall program. Initial phone contacts were confirmed by telegram. Cooperation has generally been excellent. Among the gunsmith comments have been concerns about future product liability claims arising from this program, their ability to provide adequate service at this point in the hunting season and the adequacy of the $5.00 bench charge.

Forms to document the receipt of customer guns and serve as an invoice have been prepared and are being distributed.

An installation procedure for the replacement trigger assemblies is being prepared in Ilion. It appears this will be more complicated than anticipated because some fitting is required in older guns. We will review the proposed procedure and if necessary run a pilot evaluation with selected gunsmiths before making a general mailing.

Arrangement have been made to hand carry the available trigger assemblies to the 10 Texas gunsmiths today. Installation procedures will be discussed. We estimate each Texas gunsmith will receive a minimum of 50 trigger assemblies.

Ilion will be established as a repair station for customers requiring special handling. The gunsmith's reporting procedures will be used to maintain a common input to the record control system being developed by Business Services.

3. Replacement Parts- Mohawk rifle assembly has been suspended to increase trigger housing assembly availability. Production estimates they can start supplying at the rate of 75 per day and reach a rate of 325 per day by the end of November. It was decided to remove the trigger assemblies from approximately 3500 Mohawk 600s now in the warehouse in order to expedite initial shipments.

4. Export and Canada - Giner, Droge and Millhofer have been notified. Millhofer estimates there are 15,000 of the subject guns in Canada. He will visit Bridgeport Tuesday to review the program established for the domestic market.

NOTE: Attached are copies of press releases, gunsmith correspondence and other materials related to the recall.

EFB:jl
Attach.

A. General Press Release

B. Financial Press Release

C. Telephone Request to Gunsmiths

D. Telegram Confirming Gunsmith Participation

E. Format for Atlanta Information Center

F. Gunsmith Receipt and Repair Form

G. Telegram Informing Gunsmiths about Customer Complaint Numbers

H. Sales Data For 600 Series Rifles

I. Serial Number Clarification

Customers should give the operator the model and serial numbers of their gun when calling.

Serial numbers involved in the recall are as follows:

Remington Model 600s	-From Serial #0001 to 131,552
Remington Model 660s	-From Serial #0001 to 131,552
Mohawk 600s	-From Serial #6,200,000 to 6,899,999
Remington Model 660s	-From Serial #6,200,000 to 6,899,999
Remington XP-100	-From Serial #0001 to 7,508,983

A

NEWS RELEASE

Remington REMINGTON ARMS COMPANY, INC. • PUBLIC RELATIONS • BRIDGEPORT, CONNECTICUT 06602

FOR RELEASE IMMEDIATELY

BRIDGEPORT, Ct., October 25, 1978 -- Remington Arms Company, Inc., announced today that under certain unusual circumstances on some of its center fire bolt action firearms, the safety selector and trigger could be manipulated in such a way that subsequently moving the selector to the fire position could result in accidental discharge. Remington firearms involved are Model 600, 660 and Mohawk 600 rifles and XP-100 pistols manufactured prior to February 1975.

The difficulty can be corrected by installation of a new trigger assembly. In view of the potential safety hazard, the Company is recalling all of these guns produced prior to February 1975 for inspection and modification as required.

Efforts are being made to contact owners of these guns. Individuals who have Model 600, 660 and Mohawk 600 rifles or XP-100 pistols involved in the recall should write to Remington rms Company, Inc., Bridgeport, CT 06602, or call the following toll free number for information on procedures:

In all states except Georgia:

800-241-8444 - Ask for Operator 61

In Georgia:

800-282-1333 - Ask for Operator 61

- MORE -

Remington DUPONT REMINGTON ARMS COMPANY, INC. • PUBLIC RELATIONS • BRIDGEPORT, CONNECTICUT 06602

NEWS RELEASE

FOR RELEASE IMMEDIATELY

BRIDGEPORT, Ct., October 25, 1978 -- On October 23, 1978, a product liability case against Remington Arms Company, Inc., and one of its dealers was settled for $6,800,000 by Remington's insurance carriers. The case involved an alleged accidental discharge of a Mohawk Model 600 rifle manufactured by Remington. Injuries to the plaintiff were extremely serious, leaving him partially paralyzed. The plaintiff alleged that at the time the gun fired the trigger was not pulled. Remington's investigation indicated that this was unlikely but possible due to the fact that under certain unusual circumstances the safety selector and trigger could be manipulated in such a way that subsequently moving the selector to the fire position could result in accidental discharge. Settlement costs are substantially covered by the Company's liability insurance.

A recall program has been initiated in connection with Mohawk Model 600 rifles and Remington Model 600 and 660 rifles and XP-100 pistols manufactured prior to February 1975.

###

B

via telephone call

October 24, 1978

Today, the Remington Arms Company, Inc., announced the recall of Models 600, 660, Mohawk 600, XP-100 bolt action guns, produced prior to February, 1975, because of a possible safety problem.

As a Remington Recommended Gunsmith, your shop has been listed with an 800 Enterprise message receiving center in Atlanta, Georgia. Upon receipt of a call from an owner of one of the guns involved, the message receiving center will direct him to the Remington Recommended Gunsmith located geographically nearest to him, for repair of the gun. We estimate you may receive up to 200 of these guns for repair.

To provide the simplest and most positive repair, you will be supplied with new trigger assemblies for replacement of the original. The repair will be done at no charge to the gun owner.

Our Arms Service section reports that the replacement of the trigger assembly can be made in 7-1/2 to 10 minutes. Based on this, we plan to allow you a $5.00 bench charge for this work. Where transportation or other special handling costs are involved, we will reimburse you.

While full details have not been developed, we did want to give you this advance notice, and we will contact you in the very near future, covering all details.

Meanwhile, should any guns be returned to you, please record the date, name, address, zip code, and serial number and caliber of the gun, and hold until you have our instructions.

C.

CONFIDENTIAL-SUBJECT TO PROTECTIVE ORDER
KINZER V. REMINGTON

This went to participating Dealers

TELEGRAM

Thank you for agreeing to assist us in the installation of a new trigger assembly in Remington 600, Model 660 and Mohawk 600, and XP-100 pistols, covered by our recall.

Our toll free Message Center is advising customers in your area of your availability to make this installation.

We are sending you under separate cover special repair and information forms, plus an initial supply of replacement trigger assemblies.

For your information, Remington will assume full and complete responsibility for any and all claims that may arise out of the design or manufacture of the trigger assembly provided to you by Remington for this modification.

The only guns included in the recall are all Remington Model 600 and 660 rifles, and all Mohawk Model 600 rifles, except those with a serial number starting with an "A". Also included in the recall are any XP-100 pistols with a serial number between 0001 and 7,507,983.

If you have any questions, please call Ed Sienkiewicz collect at (315) 894-9961.

REMINGTON ARMS COMPANY, INC.

10/27/78

D.

Person calls in on 800 numbers, asks for Operator 61 or Remington recall information.

Operator asks for Model No. _____ & Serial Number _____.
Checks Model and Serial Number blocks for recalled guns -

if gun is not involved, inform caller and thank him.

if gun is part of recall, operator will ask for

Name _____
Address _____
_____
Phone Number _____

The operator will say:

"Remington recommends prior to any further usage of your gun that you bring it directly to a selected gunsmith in your area for inspection and modification which will be done free of charge. If you have a pencil and paper handy, the closest gunsmith is* _____.

If you have any further questions you should write to:

Remington Arms Company, Inc.
Box EGL
Bridgeport, Ct. 06602"

*The phone number will be used to determine the nearest Remington gunsmith (out of 179).

If there is more than one gunsmith in the area, the caller will be given a name and address. The gunsmiths will be rotated after each call to assure a balance of customers per gunsmith.

E.

Form RA 1000

Ref. # 015312

REMINGTON ARMS COMPANY, INC.

Trigger Assembly Special Replacement Program

(A) GUNSMITH

Name _____

Street _____

City, State, Zip _____

Telephone _____ (Area Code)

Control No. [ ][ ][ ][ ][ ][ ] (For Rem. Use Only)

GUN OWNER

Name _____

Street _____

City, State, Zip _____

Telephone _____ (Area Code)

Control No. [ ][ ][ ][ ][ ][ ] (For Rem. Use Only)

(B) FIREARMS INFORMATION

Model (Check One)
- ☐ 1. Rem 600
- ☐ 2. Rem 660
- ☐ 3. Mohawk 600
- ☐ 4. XP-100

Caliber (Check One)
- ☐ 1. 222 Rem.
- ☐ 2. 6mm Rem.
- ☐ 3. 243 Win.
- ☐ 4. 308 Win.
- ☐ 5. 6.5mm Rem. Mag.

Caliber (Check One)
- ☐ 6. 350 Rem. Mag.
- ☐ 7. 35 Rem.
- ☐ 8. 223 Rem.
- ☐ 9. 221 Rem. "Fireball"
- ☐ 10. Rechambered

Serial No. [ ][ ][ ][ ][ ][ ][ ]

(C) MODIFICATION INFORMATION

Method Gun Received From Owner:
(Check One)
- ☐ Hand Delivered
- ☐ UPS
- ☐ U.S. Mail
- ☐ Other _____ (Specify)

	Month	Day	Year
Date Gun Received From Owner	[ ][ ]	[ ][ ]	[ ][ ]
Estimated Completion Date	[ ][ ]	[ ][ ]	[ ][ ]

IMPORTANT — This Copy Must Be Completed and Mailed Immediately Upon Receipt of Gun.

F.

PARTS CONTROL COPY
(completed form to be mailed immediately upon receipt of gun)

We have set up toll free numbers to handle gun owner complaints. These numbers will be in operation beginning Saturday, October 28:

In Connecticut	800-972-9379
Outside Connecticut	800-243-9275

We are doing everything possible to expedite shipment of replacement trigger assemblies; however, the initial supply will be limited. Because these trigger assemblies are the only ones approved for this replacement program, please do not use trigger assemblies you may have in stock.

If you have Model 600 series trigger assemblies in inventory, return them to us freight collect and we will credit your account.

G.

	Rem. M/600	Rem. M/660	Mohawk 600	Total
1963	100	--	--	100
1964	25,279	--	--	25,279
1965	24,851	--	--	24,851
1966	22,307	--	--	22,307
1967	19,061	87	--	19,148
1968	2,488	24,373	--	26,861
1969	--	14,196	--	14,196
1970	2	7,694	--	7,696
1971	--	3,993	4,979	8,972
1972	--	193	4,961	5,154
1973	--	--	8,739	8,739
1974	--	--	12,110	12,110
1975	--	--	13,120	13,120
1976	--	--	13,318	13,318
1977	--	--	17,631	17,631
1978	--	--	16,927 (as of 10/18)	16,927
TOTAL	94,088	50,536	91,785	236,409

HDA/ap
10/23/78

H.

Remington
DU PONT

REMINGTON ARMS COMPANY, INC.

TELEX 964-201 STRATFORD, CT

SPORTING ARMS-AMMUNITION-TARGETS-TRAPS
BRIDGEPORT, CONNECTICUT 06602

TELEPHONE 203-333-1112

February 8, 1979

TO OUR FIREARMS DISTRIBUTORS

SUBJECT: BULLETIN - RIFLE RECALL

Gentlemen:

In our letter of November 3, 1978 on this subject, we mentioned that we would be sending you information on shipments we have made to you of models covered by our recall (certain Model 600, 660 and Mohawk 600 rifles and XP-100 pistols).

As an expediency, we have, instead, elected to take a more direct approach ... furnishing full information on the recall to firearms dealers.

Enclosed is a copy of a letter now being mailed to our dealer list, together with a laminated message for use as a display in bringing information on the recall to the attention of retail customers. Also enclosed is a copy of a form for dealers to use in sending customer data back to us. In addition, we plan a similar mailing to the full list of Federal Firearms License holders in the near future.

We appreciate your cooperation in working with us on this recall, and while it may be necessary to request your assistance from time to time, every attempt will be made to spare you as much inconvenience as possible.

Sincerely,

E. J. Conroy

E. J. Conroy
Director of Sales

EJC/ecc
Attachments

Remington
DU PONT

REMINGTON ARMS COMPANY, INC.

TELEX
964-201
STRATFORD, CT

SPORTING ARMS-AMMUNITION-TARGETS-TRAPS
BRIDGEPORT, CONNECTICUT 06602

TELEPHONE
203-333-1112

February 8, 1979

TO REMINGTON FIREARMS DEALERS:

BULLETIN: PRODUCT RECALL

As you are undoubtedly aware, we are recalling certain of our Model 600 series of center fire rifles and our XP-100 target pistol. We are trying to reach all of the owners who may have these recalled models and you can be of invaluable assistance to us in this effort. To date, we have alerted the public to our recall through radio and television coverage as well as by newspaper and magazine articles and advertisements. In order to help us reach the individual shooter directly, we ask that you look through your files to determine the customers to whom the following recalled guns were sold:

MODELS BEING RECALLED

All Remington Model 600 and 660 rifles, and all Mohawk Model 600 rifles EXCEPT THOSE WITH A SERIAL NUMBER STARTING WITH AN "A".

Any XP-100 pistol with a serial number below 7507984, EXCEPT THOSE WITH THE PREFIX "A" OR "B" BEFORE THE NUMBER.

DATES OF MANUFACTURE

Prior to February, 1975

* * *

Please send the customers' names and addresses to us at:

Remington Arms Company, Inc.
Box AWB
Bridgeport, CT 06602

and we will contact them.

Enclosed for your convenience is a form to be used in sending us the above information.

We also urge you to check your own firearms inventories to be absolutely sure none of these recalled guns remain in your stock. If you find that you do have either a new or used gun covered by the recall, call the appropriate toll-free number listed below to find the name of the nearest participating gunsmith who will, at no charge, inspect and modify the gun as required.

All states except Georgia - 1-800-241-8444 (Operator 61)

Georgia only - 1-800-282-1333 (Operator 61)

Inquiring customers who may have guns covered by the recall should be told that Remington recommends that prior to any further usage of their guns that they be inspected and modified as required. This will be done at no charge by participating gunsmiths around the country. Customers may call one of the above toll-free phone numbers for the name of the nearest participating gunsmith. If the location is not convenient to personally deliver the gun, the customer may send the gun collect to the gunsmith and have it returned prepaid.

For convenient in-store use and display purposes we are also attaching a laminated message form that shows information pertaining to the recall.

We thank you for your cooperation in assisting us in this recall and regret any inconvenience caused you or your customers.

Sincerely,

E. J. Conroy

E. J. Conroy
Director of Sales

EJC/ecc
Attachments

IMPORTANT MESSAGE TO OWNERS OF REMINGTON MODEL 600 AND 660 RIFLES, MOHAWK 600 RIFLES, AND XP-100 PISTOLS.

Under certain unusual circumstances, the safety selector and trigger of these firearms could be manipulated in a way that could result in accidental discharge.

The installation of a new trigger assembly will remedy this situation. Remington is, therefore, recalling all Remington Model 600 and 660 rifles, and all Mohawk Model 600 rifles—**except those with a serial number starting with an "A."**

Also included in the recall are any XP-100 pistols with a serial number below 7507984, **except those with the prefix "A" or "B" before the number.**

Remington recommends that prior to any further usage of guns included in the recall, they be inspected—and modified if necessary. To obtain the name and address of the nearest Remington Recommended Gunsmith (who will perform the inspection and modification service free of charge), phone one of the following numbers:

In all states except Georgia (toll free):

1-800-241-8444—ask for operator 61

In Georgia (toll free):

1-800-282-1333—ask for operator 61

In Canada (collect):

519-621-7271

****

Another important message to all gun owners.
Much has been written on firearms safety in general, and gun safeties, in particular, but we feel that a most incisive statement is contained in the NRA Hunter/Safety Handbook: "No hunter should depend wholly on the safety to prevent accidental firing. The safety is meant only to supplement proper gun handling."

Remington Arms Company, Inc.

NEWS RELEASE

Remington. DUPONT REMINGTON ARMS COMPANY, INC. • PUBLIC RELATIONS • BRIDGEPORT, CONNECTICUT 06602

FOR RELEASE IMMEDIATELY

BRIDGEPORT, Ct., October 25, 1978 -- On October 23, 1978, a product liability case against Remington Arms Company, Inc., and one of its dealers was settled for $6,800,000 by Remington's insurance carriers. The case involved an alleged accidental discharge of a Mohawk Model 600 rifle manufactured by Remington. Injuries to the plaintiff were extremely serious, leaving him partially paralyzed. The plaintiff alleged that at the time the gun fired the trigger was not pulled. Remington's investigation indicated that this was unlikely but possible due to the fact that under certain unusual circumstances the safety selector and trigger could be manipulated in such a way that subsequently moving the selector to the fire position could result in accidental discharge. Settlement costs are substantially covered by the Company's liability insurance.

A recall program has been initiated in connection with Mohawk Model 600 rifles and Remington Model 600 and 660 rifles and XP-100 pistols manufactured prior to February 1975.

###

Remington
DUPONT

REMINGTON ARMS COMPANY, INC.
SPORTING ARMS-AMMUNITION-TARGETS-TRAPS
BRIDGEPORT, CONNECTICUT 06602
TELEPHONE 203-333-1112

November 3, 1978

TO OUR FIREARMS DISTRIBUTORS

SUBJECT: BULLETIN - RIFLE RECALL

Gentlemen:

Attached is a copy of a News Release related to the Recall of one model of our center fire rifles, and our one handgun.

Model Being Recalled

All Remington-Brand Model 600 Bolt Action Center Fire Rifles

All Remington-Brand Model 660 Bolt Action Center Fire Rifles

Any Mohawk-Brand Model 600 Bolt Action Center Fire Rifle except those with a serial number starting with an "A"

Any Remington-Brand XP-100 Center Fire handgun with a serial number less than #7,507,984, except those with the prefix "A" or "B" before the number.

Dates of Manufacture

Prior to February, 1975.

How Recall is Being Handled

Consumers having guns covered by the recall should be told that Remington recommends that prior to any further usage of their guns they be inspected and modified as required. This will be done at no charge by participating gunsmiths around the country. Consumers may call one of the following numbers for the name of the nearest participating gunsmith.

All States Except Georgia	1-800-241-8444 - Operator 61
Georgia Only	1-800-282-1333 - Operator 61

BARBER - PRESALE R 0129539

If the location is not convenient to personally deliver the gun, the consumer may send the gun collect to the gunsmith and have it returned prepaid.

What Distributors Can Do

We suggest you check your gun inventories to be absolutely sure none of these recall rifles remain in your stock. Also, in a short time we will be giving you further information which will help you to determine the dealers to whom you may have shipped some of these rifles.

What Your Dealers Can Do

Dealers should look through their files to determine shooters to whom the guns were sold. Shooters should then be contacted and told to call the toll-free number for procedures. Also, dealers should check their inventories to be absolutely sure they don't have any of the rifles remaining.

Presently we are combing our files to send you information we will have available on shipments we have made to you of this model. Retrieval of this information in such large quantities is time consuming. If you have any questions for us, please call our Mr. Jack Chisnall at our special WATS ACTION LINE 1-800-243-9275 (inside Connecticut 1-800-972-9379) or write him at the address shown on page 1 of this letter.

Thanks again for your cooperation in handling this recall. Additional information will be sent to you as available, together with a copy of a letter to the dealers which is now being prepared.

Sincerely,

E. J. Conroy

E. J. Conroy
Director of Sales

EJC/o

attachment

CONFIDENTIAL-SUBJECT TO PROTECTIVE ORDER
KINZER V. REMINGTON

BARBER - PRESALE R 0129539 R2530527

FOLD HERE

FROM:

NO POSTAGE
NECESSARY
IF MAILED
IN THE
UNITED STATES

BUSINESS REPLY MAIL
FIRST CLASS PERMIT NO. 420 BRIDGEPORT, CONN.

POSTAGE WILL BE PAID BY —

REMINGTON ARMS COMPANY, INC.
P.O. BOX AWB
BRIDGEPORT, CONN.
06602

FOLD HERE

FORM #
RA1897

REF. № 224442

DEALER: NAME _____

STREET _____

CITY, STATE, ZIP _____

TELEPHONE _____ Area _____ Number

FEDERAL FIREARMS LICENSE NO. _____

REMINGTON ARMS COMPANY, INC.
PRODUCT RECALL

MODELS BEING RECALLED

All Remington Model 600 and 660 Rifles, and All Mohawk Model 600 Rifles
EXCEPT THOSE WITH A SERIAL NUMBER STARTING WITH AN "A".
Any XP-100 Pistol With a Serial Number Below 7507984
EXCEPT THOSE WITH THE PREFIX "A" OR "B" BEFORE THE NUMBER.

DESCRIPTION OF MODELS SUBJECT TO RECALL			NAMES AND ADDRESSES OF PERSONS WHO PURCHASED MODELS UNDER RECALL				
MODEL	CAL.	SERIAL NO.	NAME	ADDRESS	CITY	STATE	ZIP

NOTE: IF YOU NEED ADDITIONAL COPIES OF THIS FORM CHECK THIS BOX ☐ HOW MANY?

WHEN YOU HAVE COMPLETED THIS FORM PLEASE REFOLD AND MAIL. POSTAGE WILL BE PAID BY REMINGTON ARMS CO., INC.

CONFIDENTIAL-SUBJECT TO PROTECTIVE ORDER
KINZER V. REMINGTON

BARBER - PRESALE R 0129541

BARBER - PRESALE R 0129541

R2530529

RD-69-5

REMINGTON ARMS COMPANY, INC.

INTER-DEPARTMENTAL CORRESPONDENCE

Remington DU PONT PETERS DU PONT

"CONFINE YOUR LETTER TO ONE SUBJECT ONLY"

cc: E. Hooton, Jr. 5-25 ok.

May 23, 1979

TO: ~~R.L. HALL~~ RH 5/25

FROM: J.H. CARTER

SUBJECT: MODEL 788

We have received all 46 Model 788, 22-250 caliber rifles that were subject to recall to check barrel thread dimensions.

J H Carter
J.H. Carter
Superintendent-Planning

JHC:jr

DON'T SAY IT—*WRITE IT* c: E. Hooton, Jr.

To ~~R. L. HALL~~ J. R. AYERS Location

From H. K. BOYLE HKB Location Phone No.

Subject MODEL 600 TRIGGER ASSEMBLIES Date 11/30/78

In talking with Red Sherman about the Model 600 recall status, Red gave me the following statistics and opinions:

1) 5,000 forms have been turned in by gunsmiths to indicate receipt of guns in their shops.

2) 1,441 requests for payment to gunsmiths have been paid, averaging $7.39/gun.

3) Red was of the opinion that about 10,000 guns would be repaired through the end of January 1979, and an adequate bank of Trigger Housings at Ilion would be 5,000, excluding plant needs for warehouse M/600 Trigger Housing replacement.

4) Red said that in talking with Les Freer in Dallas, Texas, Les had received 33 calls on M/700 accidental discharges and Red, himself, had received 18 letters on this subject. Les expressed concern about what appears to be growing public concern over bolt action rifle safety in general.

HKB:iw

RD 779 STOP, LOOK, AND LIVE

RD-69-B

REMINGTON ARMS COMPANY, INC.

INTER-DEPARTMENTAL CORRESPONDENCE

Remington DU PONT PETERS DU PONT

"CONFINE YOUR LETTER TO ONE SUBJECT ONLY"

Ilion, New York
February 12, 1979

R. L. HALL

STATUS OF XP-100 PISTOL

Monday, Feb. 5:	Meeting held to organize actions to be taken to start production and conversion of customer repair pistols.
Tuesday, Feb. 6:	All pistols on production disassembled and parts separated. Production to latest design initiated.
Wednesday, Feb. 7:	Pistols from production and customer repair ready for R & D. A hold was put on production until R & D could determine what engagement requirements were necessary to meet drop test specifications - Process Record called for .020 engagement with no creep - which was impossible to hold. Samples delivered to R & D had .010 - .016 engagement, with no creep.
Thursday, Feb. 8:	Production and Customer Repair continued to assemble pistols up to the adjustment of engagement, which is a screw adjustment, and one of the last assembly steps.
Friday, Feb. 9:	R & D after testing, stated they want .015 min. engagement and will accept some creep.
Monday, Feb. 12:	R & D to supply specification for how many revolutions screw should be turned to obtain proper adjustment. Production to start; R & D testing complete.

JPL:eb

J. P. Linde, Supt.
P E & C Section

J P Linde

RD-69-B

REMINGTON ARMS COMPANY, INC.

INTER-DEPARTMENTAL CORRESPONDENCE

Remington DUPONT PETERS DUPONT

"CONFINE YOUR LETTER TO ONE SUBJECT ONLY"

Ilion, New York
January 26, 1979

R. L. HALL

MODEL XP-100 SEQUENCE OF EVENTS

Model XP-100 sequence of events in modifying customer return guns and insuring integrity of production Trigger Assemblies is listed chronologically below:

Date	Event
10-24-78	Remington announced recall of M/600 and XP-100 pistol.
11-78	Engineering and Production effort concentrated on M/600. Gunsmith write-up - assemblies for gunsmith - establishing process for Trigger Assemblies to be shipped.
11-17-78	Present process reviewed - trick test for XP-100 reviewed with assemblers - shim test added (check for clearance between Sear and Sear Block with shim Stock, with Safety in null position).
12-1-78	Initial work on defining situation for customer repair XP-100's started - process reviewed, additions and clarifications were made.
12-15-78	Process developed for customer repair pistols; Engineers tried sample run. Customer repair gunsmith trained.
12-18-78	Initial lot of 25 customer guns modified to repair process. Lot rejected, two guns failed test. (1) shim test and (1) trick test.

Date	Event
12-18-79 Contd.	The trick test was re-evaluated and it was found that the engineer and gunsmith were using different techniques - standardized test. The shim test was also re-evaluated for consistent and easier operation. It was also found that some customers had made alterations to the Sear Housing Assemblies and they had to be readjusted to standards.
12-28-78	A second lot of 25 was modified to revised process. A large percent of pistols wound not passshim test and the new gaging technique was questioned - parts measured.
1-4-79	Engineering analysis showed second lot of pistols was using a new shipment of Safety Assemblies which had .006" less lift on Sear. R & D altered drawing to increase lift - parts were ordered with higher lift. Shim test results were analyzed by using dial gage which fits into back of Receiver. Results were correlated.
1-10-79	New lot of 25 pistols started to process for modification - high lift Sears were used and pistols were audited - process verified.
1-12-79	Repair verified on customer pistols - pistols started being returned to customers. Production started using low lift Safety levers; reject rate increased dramatically $\approx$ 50%.
1-19-79	New Safety levers delivered to Ilion - found to have too much Sear lift, .002" over max. model drawing.
1-22-79	New Safety levers in Assemblies - mechanism would lock up when put on Safe. Safety levers ground down to max. model drawing. Mechanism worked but rear of Sear interferes with Sear Housing Pin.
1-23-79	Safety levers ground to mean model drawing - still binding. Drawing change made to grind clearance on Sear - parts tried, mechanism worked.

BARBER - PRESALE R 0129547

Date	Event
1-24-79	Parts modified, Assemblies put together. Safety worked hard. Lubrication technique developed - parts delivered to Final Assembly - pistols put up.
1-25-79	Pistols tested satisfactorily. More parts were modified. Pistols which had been rejected were refitted with new Sear and lever.
1-26-79	More parts being modified - permanent process for part modification being developed.
1-29-79	Parts delivered to Customer Repair - to continue modifying guns - 147 shipped to date.

J P Linde

J. P. Linde, Superintendent
P E & C Section

JPL:eb

CONFIDENTIAL-SUBJECT TO PROTECTIVE ORDER
KINZER V. REMINGTON

BARBER - PRESALE R 0129547 R2530535

RD-69-B

REMINGTON ARMS COMPANY, INC.

INTER-DEPARTMENTAL CORRESPONDENCE

Remington DUPONT PETERS DUPONT

"CONFINE YOUR LETTER TO ONE SUBJECT ONLY"

Ilion, New York
January 26, 1979

R. L. HALL

MODEL XP-100 SEQUENCE OF EVENTS

Model XP-100 sequence of events in modifying customer return guns and insuring integrity of production Trigger Assemblies is listed chronologically below:

Date	Event
10-24-78	Remington announced recall of M/600 and XP-100 pistol.
11-78	Engineering and Production effort concentrated on M/600. Gunsmith write-up - assemblies for gunsmith - establishing process for Trigger Assemblies to be shipped.
11-17-78	Present process reviewed - trick test for XP-100 reviewed with assemblers - shim test added (check for clearance between Sear and Sear Block with shim Stock, with Safety in null position).
12-1-78	Initial work on defining situation for customer repair XP-100's started - process reviewed, additions and clarifications were made.
12-15-78	Process developed for customer repair pistols; Engineers tried sample run. Customer repair gunsmith trained.
12-18-78	Initial lot of 25 customer guns modified to repair process. Lot rejected, two guns failed test. (1) shim test and (1) trick test.

Date	Event
12-18-79 Contd.	The trick test was re-evaluated and it was found that the engineer and gunsmith were using different techniques - standardized test. The shim test was also re-evaluated for consistent and easier operation. It was also found that some customers had made alterations to the Sear Housing Assemblies and they had to be readjusted to standards.
12-28-78	A second lot of 25 was modified to revised process. A large percent of pistols wound not passshim test and the new gaging technique was questioned - parts measured.
1-4-79	Engineering analysis showed second lot of pistols was using a new shipment of Safety Assemblies which had .006" less lift on Sear. R & D altered drawing to increase lift - parts were ordered with higher lift. Shim test results were analyzed by using dial gage which fits into back of Receiver. Results were correlated.
1-10-79	New lot of 25 pistols started to process for modification - high lift Sears were used and pistols were audited - process verified.
1-12-79	Repair verified on customer pistols - pistols started being returned to customers. Production started using low lift Safety levers; reject rate increased dramatically $\approx$ 50%.
1-19-79	New Safety levers delivered to Ilion - found to have too much Sear lift, .002" over max. model drawing.
1-22-79	New Safety levers in Assemblies - mechanism would lock up when put on Safe. Safety levers ground down to max. model drawing. Mechanism worked but rear of Sear interferes with Sear Housing Pin.
1-23-79	Safety levers ground to mean model drawing - still binding. Drawing change made to grind clearance on Sear - parts tried, mechanism worked.

Date	Event
1-24-79	Parts modified, Assemblies put together. Safety worked hard. Lubrication technique developed - parts delivered to Final Assembly - pistols put up.
1-25-79	Pistols tested satisfactorily. More parts were modified. Pistols which had been rejected were refitted with new Sear and lever.
1-26-79	More parts being modified - permanent process for part modification being developed.
1-29-79	Parts delivered to Customer Repair - to continue modifying guns - 147 shipped to date.

J P Linde

J. P. Linde, Superintendent
P E & C Section

JPL:eb

BARBER - PRESALE R 0129551

R. L. HALL

RD-69-B

cc: E.G. Larson
J.P. Linde
W.A. Warren

REMINGTON ARMS COMPANY, INC.

INTER-DEPARTMENTAL CORRESPONDENCE

Remington DU PONT PETERS DU PONT

"CONFINE YOUR LETTER TO ONE SUBJECT ONLY"

November 16, 1978

TO: G.J. HILL

FROM: E.F. SIENKIEWICZ

SUBJECT: MODEL 600 REPLACEMENT TRIGGERS

Reports of four (4) Model 600 replacement trigger assembly triggers breaking at the pivot pin hole have been received.

Sporting Goods, Inc., Houston, Texas, reported three (3) triggers broken in a recently received shipment and, Frank's Gun Shop, Yuma, Arizona, reported one (1) breakage.

It appears we may have a problem requiring immediate attention.

EFS:TPP

E.F.S.

NOTE: Discovered problem Thursday, November 16. Preliminary investigation reveals parts coming cracked from Powder Metal.

Powder Metal has been contacted and made aware of problem Production has initiated magnaflux operation ahead of assembly.

All parts starting today, November 17, will be magnafluxed; Research was contacted to determine if a safety problem existed. Their answer was negative.

JPLinde:eb
11-17-78

CONFIDENTIAL-SUBJECT TO PROTECTIVE ORDER
KINZER V. REMINGTON

BARBER - PRESALE R 0129551 R2530539

G-88

DON'T SAY IT — WRITE IT

To R. L. HALL

Date 11-6-78

From J. P. LINDE

This is the information that you requested. . .

JPL:eb

SAFETY IS A WISE INVESTMENT

CONFIDENTIAL-SUBJECT TO PROTECTIVE ORDER
KINZER V. REMINGTON

11/2/78

COMMON PARTS -

M/700-600 FIRE CONTROLS

	M/700		M/600
Trigger Assembly	26345	Separate	91469
Bolt Stop Release	15478	Separate	None
Safety Assembly (Safety Lever)	26585	Separate	91468
Safety	15370	Separate	91467
Safety Button	14578	Separate	
Safety Thumbpiece		Separate	15453
Safety Detent Ball	23222	Same	23222
Safety Detent Spring	15368	Same	15368
Safety Pivot Pin	17043	Same	17043
Safety Snap Washer	17044	Same	17044
Sear Safety Cam	15666	Process Common	91470
Sear Spring	17047	Same	17047
Trigger	15280	Process Common	15435
Trigger Adjusting Screw	17053	Same	17053
Trigger Engagement Screw	91128	Same	91128
Trigger Connector	19461	Process Common	15436
Trigger Housing Assembly	26655	Same	26655
Trigger Housing Rivet)			
Trigger Housing Spacer Front)			
Trigger Housing Spacer Rear)			
Trigger Side Plate Left)		S A M E	
Trigger Side Plate Right)			
Trigger Pin)			
Trigger Spring			
Trigger Stop Screw			

GJH/bdm

11/1/78

SAFETY

M/700 M/600

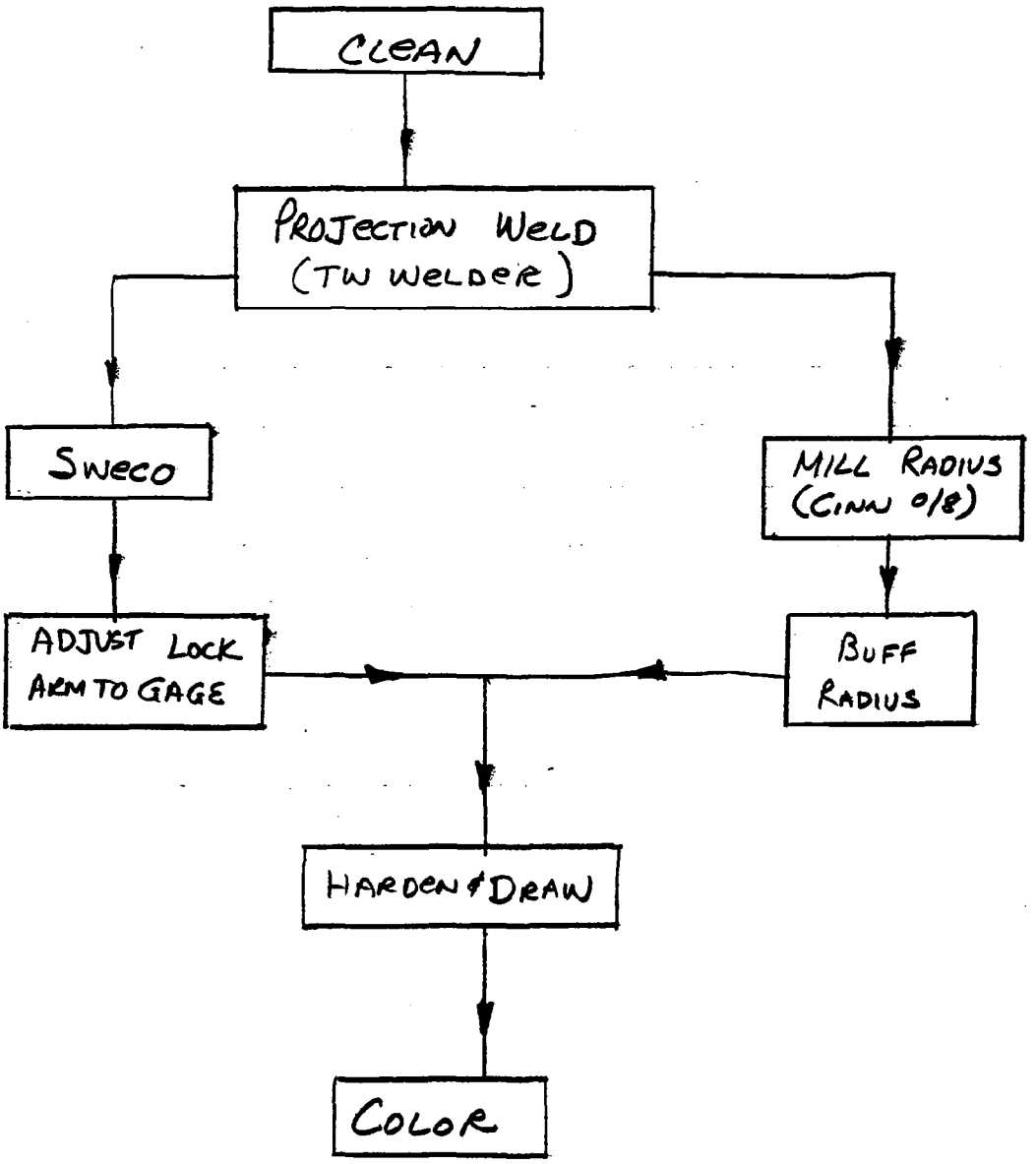

11/2/78

SEAR SAFETY CAM

SAME PROCESS -
DIFFERENT BLANK

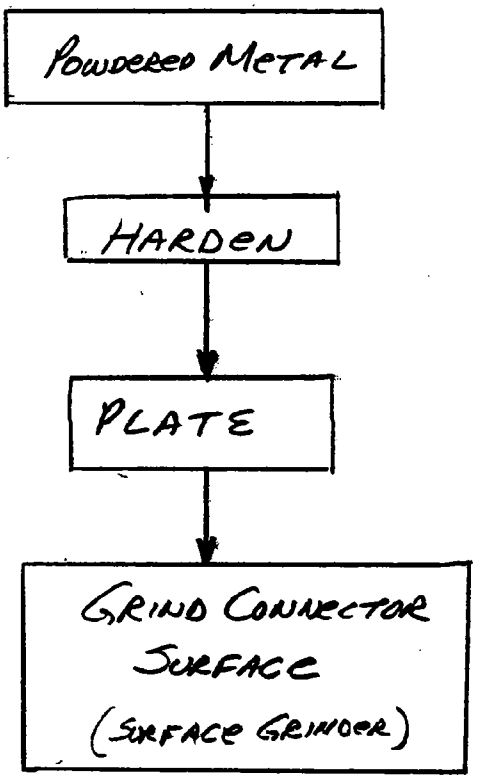

SPH 11/7/78

TRIGGER

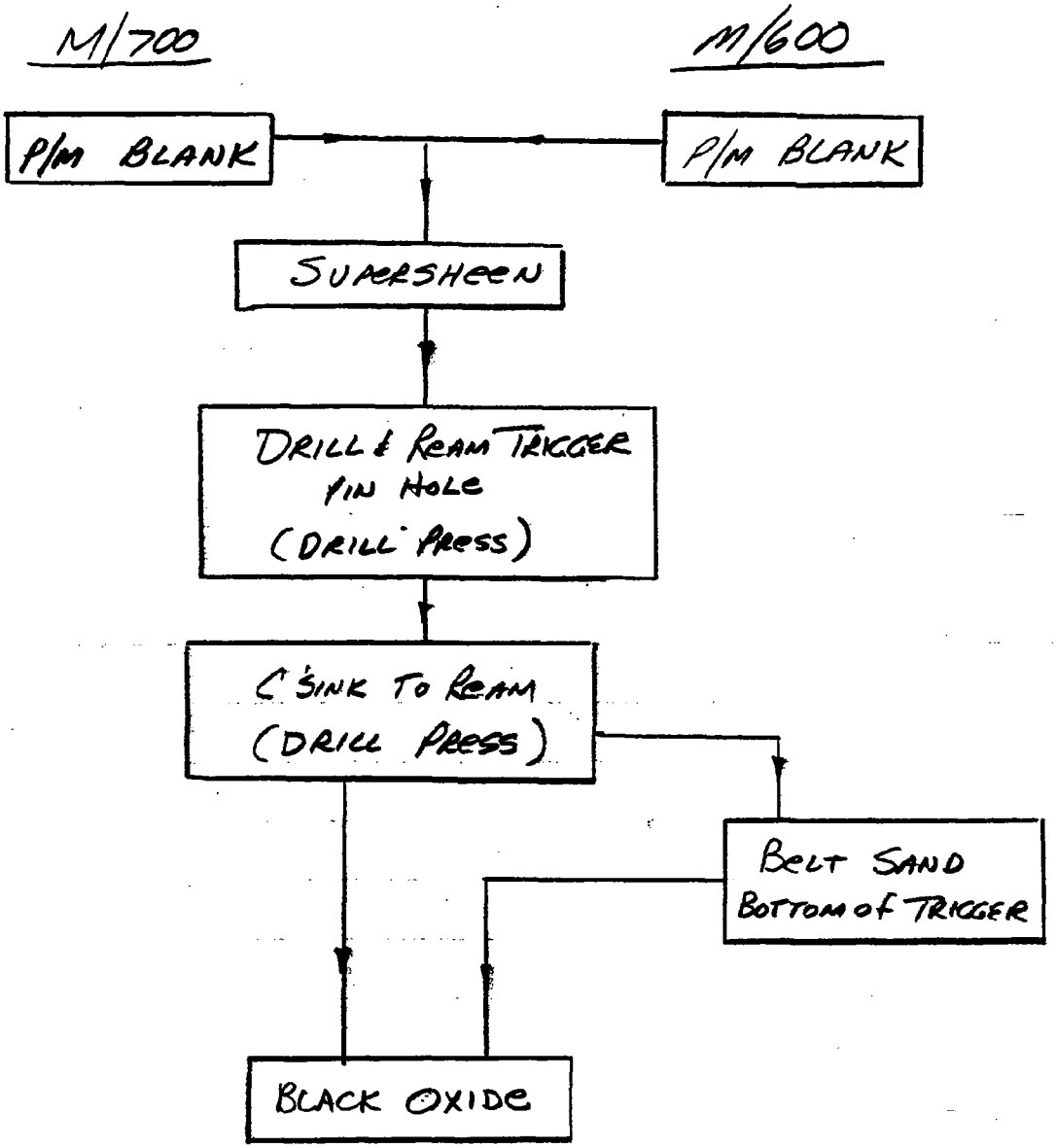

11/21/78

TRIGGER CONNECTOR

SAME PROCESS
DIFFERENT BLANKS

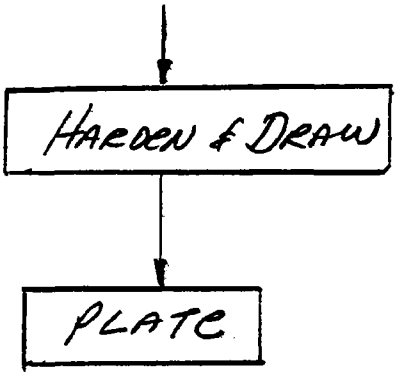

Ilion Research Division RD – 6514

DATE 4-10-78 6-29-76		MOHAWK 600 Bolt Action - Center Fire Rifle						
SHEET OF	3 4	Dotted line (– – – –) indicates same part number.						
DWG. NO.		PART	308 Win.	6mm Rem.	243 Win.	222 Rem.		
			PART NUMBERS					
A-14694		SLING STRAP ASSEM. & MTGS. COMP. 7/8"						
		(Accessory - added cost)	14694	—	—	—		
A-15356		Front Swivel Screw	15356	—	—	—		
A-15358		Rear Swivel Screw	15358	—	—	—		
C-30855		Sling Strap Assembly 7/8"	30855	—	—	—		
A-15376		Fastener	15376	—	—	—		
A-15377		Keeper Front	15377	—	—	—		
B-14655		Sling Strap	14655	—	—	—		
A-14664		Sling Strap Buckel	14664	—	—	—		
A-26555		Swivel Assembly (2) O.D.	26555	—	—	—		
A-31440		STOCK ASSEMBLY (Birch)	31440	—	—	—		
A-32445		STOCK ASSEMBLY (Walnut)	32445	—	—	—		
D-32465		Stock (Walnut)	32466	—	—	—		
D-15844		(Checkering Pattern)						
D-15741		Butt Plate	15741	—	—	—		
C-25410		Butt Plate Screw (2)	25410	—	—	—		
A-14883		(Alternate Screw)	14883	—	—	—		
B-15651		Reinforcing Screw (2)	15651	—	—	—		
A-90511		Stock (Birch)	90511	—	—	—		
C-91469		TRIGGER ASSEMBLY ✓	91469	—	—	—		
C-91468		Safety Assembly ✓	91468	—	—	—		
C-91467		Safety ✓	91467	—	—	—		
C-15453		Safety Thumbpiece ✓	15453	—	—	—		
B-23220		Safety Detent Ball ✓	23222	—	—	—		
A-15368		Safety Detent Spring ✓	15368	—	—	—		
B-17043		Safety Pivot Pin ✓	17043	—	—	—		
A-17044		Safety Snap Washer ✓	17044	—	—	—		
C-91470		Sear Safety Cam ✓	91470	—	—	—		
A-17047		Sear Spring ✓	17047	—	—	—		
C-15435		Trigger ✓	15435	—	—	—		
B-91128		Trigger Engagement Screw ✓	91128	—	—	—		
C-26655		TRIGGER HOUSING ASSEMBLY ✓	26655	—	—	—		
A-14632		Trigger Housing Rivet ✓	14632	—	—	—		
B-14630		Trigger Housing Spacer, Front ✓	14630	—	—	—		
B-14631		Trigger Housing Spacer, Rear ✓	14631	—	—	—		
C-30780		Trigger Side Plate, Right ✓	30780	—	—	—		
C-30780		Trigger Side Plate, Left ✓	30781	—	—	—		
B-17053		Trigger Adjusting Screw ✓	17053	—	—	—		

Ilion Research Division

RD – 6514

DATE 5-29-76		MOHAWK 600 Bolt Action - Center Fire Rifle						
SHEET OF	4 4	Dotted line (– – – –) indicates same part number.						
DWG. NO.		PART NUMBER	308 Win.	6mm Rem.	243 Win.	222 Rem.		
C-15436			PART NUMBERS					
~~A-15400~~		Trigger Connector	15436	——	——	——		
C-24475		Trigger Pin	24477	——	——	——		
A-15400		Trigger Spring	15400	——	——	——		
A-15481		Trigger Stop Screw	15481	——	——	——		
D-15437		Trigger Guard	15437	——	——	——		

Ilion Research Division

RD – 6514

DATE 7-11-78 9-27-77		MODEL 700 RIFLE – 1974 Bolt Action Repeater Center Fire RIGHT HAND and LEFT HAND (LH)	222 308 243 6mm 22-250	17Rem 222 308 243 6mm 22-250	308 25-06 222 223 243 6mm 22-250	7mm-06 25-06 25-06 270 30-06 7mm	270 LH 7mmLH 30-06LH 25-06 300M 270 30-06 7mm 264	7.62
SHEET 8 OF 9		Dotted line (– – – – –) indicates same part number.						
DWG. NO.		PART ~~NUMBER~~ Name	ADL Short	BDL Short	BDL Varm.	ADL Long	BDL Long	BDL MSR
			PART NUMBERS					
A-18186		Stock Reinforcing Screw	18186	—	—	—	—	—
C-25410		Recoil Pad Screw (2)				25410	—	
		(See Recoil Pad for caliber use)						
B-14473		Recoil Pad Spacer				14473	—	
		(See Recoil Pad for caliber use)						
C-90977		Recoil Pad Reinforcement Magnum				90977	—	
E-33195		Stock – ADL (Check Patt. D-90976)	33195			33196	[illegible]	
"		Stock – ADL Magnum				33197	—	
E-33205		Stock – BDL (Check Patt. D-91001)		33205			33206	33205
"		Stock – BDL Magnum					33207	33207
D-33295		Stock – Varmint			33295		33296	
[illegible]		[illegible]	33760			33761	[illegible]	
D-33405		Stock – BDL – LH		33405		[illegible]	33406	33405
D-33405		Stock – BDL – LH Magnum					33407	
[illegible]		Stock – ADL Magnum (Stainless)				[illegible]		
A-26555		SWIVEL ASSEMBLY (2) (O.D.)		26555	—		26555	
B-34096		Swivel Screw, Front		34096	—		34096	
A-15358		Swivel Screw, Rear		15358	—		15358	
D-26345		TRIGGER ASSEMBLY ✓	26345	—	—	—	—	—
D-32895		TRIGGER ASSEMBLY LH					32895	
C-15478		Bolt Stop Release ✓	15478	—	—	—	—	—
C-90555		Bolt Stop Release LH					90555	
B-26585		SAFETY ASSEMBLY ✓	26585	—	—	—	—	—
B-32900		SAFETY ASSEMBLY LH ✓					32900	
C-15370		Safety ✓	15370	—	—	—	—	—
C-90556		Safety L.H.					90556	
C-14578		Safety Button ✓	14578	—	—	—	—	—
B-23220		Safety Detent Ball ✓	23222	—	—	—	—	—
B-15368		Safety Detent Spring ✓	15368	—	—	—	—	—
B-90557		Safety Detent Spring LH					90557	
B-17043		Safety Pivot Pin ✓	17043	—	—	—	—	—
A-17044		Safety Snap Washer ✓	17044	—	—	—	—	—
C-15666		Sear Safety Cam ✓	15666	—	—	—	—	—
17047		Sear Spring ✓	17047	—	—	—	—	—
C-15280		Trigger ✓	15280	—	—	—	—	—
B-17053		Trigger Adjusting Screw ✓	17053	—	—	—	—	—
C-19461		Trigger Connector ✓	19461	—	—	—		—

Ilion Research Division

RD – 6514 8 mm

DATE 9-27-77 7-11-78		MODEL 700 RIFLE – 1974 Bolt Action Repeater Center Fire RIGHT HAND and LEFT HAND (LH)	222 308 243 6mm 22-250	17Rem. 222 308 243 6mm 22-250	308 25-06 222 223 243 6mm 22-250	7mm-06 25-06 25-06 270 30-06 7mm	270 LH 7mm LH 30-06 LH 25-06 300M 270 30-06 7mm 264	7.62
SHEET OF	9 / 9	Dotted line (– – – –) indicates same part number.						
DWG. NO.		PART ~~NUMBER~~ Name	ADL Short	BDL Short	BDL Varm.	ADL Long	BDL Long	BDL MSR
			PART NUMBERS					
B-91128		Trigger Engagement Screw	91128	—	—	—	—	—
C-26655		TRIGGER HOUSING ASSEMBLY	26655	—	—	—	—	—
C-32905		TRIGGER HOUSING ASSEMBLY LH					32905	
A-14632		Trigger Housing Rivet (4)	14632	—	—	—	—	—
B-14630		Trigger Housing Spacer Front	14630	—	—	—	—	—
B-14631		Trigger Housing Spacer Rear	14631	—	—	—	—	—
C-30780		Trigger Side Plate, Right	30780	—	—	—	—	—
C-30780		Trigger Side Plate, Right LH					30781	
C-30780		Trigger Side Plate, Left	30781	—	—	—	—	—
C-90558		Trigger Side Plate, Left LH					90558	
C-24477		Trigger Pin	24477	—	—	—	—	—
A-15400		Trigger Spring	15400	—	—	—	—	—
A-15481		Trigger Stop Screw	15481	—	—	—	—	—
C-15281		Trigger Guard	15281			15281		
6370		TRIGGER GUARD ASSEMBLY		26370	—		26371	26370
"		TRIGGER GUARD ASSEMBLY 25-06 (Long Action)			26371			
C-16434		Floor Plate		16434	—			16434
C-19800		Floor Plate					19800	
"		Floor Plate 25-06 (Long Action)			19800			
B-15291		Floor Plate Latch		15291	—		15291	—
A-16451		Floor Plate Latch Pin		16451	—		16451	—
A-16452		Floor Plate Latch Spring		16452	—		16452	—
A-16453		Floor Plate Pivot Pin		16453	—		16453	—
D-26375		Trigger Guard		26375	—		26376	26375
"		Trigger Guard 25-06 (Long Action)			26376	—	—	
A-14694		SLING STRAP ASSEM. & MTGS. COMP	14694					

R. L. HALL

STANDARD TIME

MOH. 600

CHANGE FIRE CONTROL & DRY FIRE.

RW FARRINGTON'S (EST). 7.5 - 10.0 MINS.
H.L. HENDRIX (EST.) 7.0 - 10.0 " .

OUTSIDE GUNSMITH 50% LONGER

H. BOYLE SAID HE WOULD USE 15 MINS.

R.H. Brown
10/24/78

NEWS RELEASE

Remington. DUPONT REMINGTON ARMS COMPANY, INC. • PUBLIC RELATIONS • BRIDGEPORT, CONNECTICUT 06602

FOR RELEASE IMMEDIATELY

BRIDGEPORT, Ct., October 25, 1978 -- On October 23, 1978, a product liability case against Remington Arms Company, Inc., and one of its dealers was settled for $6,800,000 by Remington's insurance carriers. The case involved an alleged accidental discharge of a Mohawk Model 600 rifle manufactured by Remington. Injuries to the plaintiff were extremely serious, leaving him partially paralyzed. The plaintiff alleged that at the time the gun fired the trigger was not pulled. Remington's investigation indicated that this was unlikely but possible due to the fact that under certain unusual circumstances the safety selector and trigger could be manipulated in such a way that subsequently moving the selector to the fire position could result in accidental discharge. Settlement costs are substantially covered by the Company's liability insurance.

A recall program has been initiated in connection with Mohawk Model 600 rifles and Remington Model 600 and 660 rifles and XP-100 pistols manufactured prior to February 1975.

###

RD-69 REV. 6-58

REMINGTON ARMS COMPANY, INC.

INTER-DEPARTMENTAL CORRESPONDENCE

Remington DUPONT

cc: E. F. Barrett, E. B. Beattie, D. C. Brooks, W. L. Flaherty, ~~R. L. Hall~~ JEA, L. S. Judd, J. E. Preiser, E. G. Tyler

cc: E. Hooton, Jr., J. H. Carter, R. J. Chesebrough, J. P. Linde

November 14, 1978

TO: R. W. STEELE

FROM: W. J. THRESHER, SR.

Accounting Procedures for the Center Fire Recall Program

To accumulate costs associated with the Center Fire Recall Program, Ilion Work Order No. 51073 has been issued for Bridgeport payments and No. 51075 for in-house Ilion charges and Arms Service repairs.

Special invoicing forms and trigger assemblies are being shipped to recommended gunsmiths for repairs. Firearms shipped to the factory will be repaired by Arms Service.

Bridgeport payments are for gunsmith repairs, recall advertising, consumer notification, wholesaler and retailer services, incoming wide area telephone service and special invoicing forms. Copies of accounts payable vouchers covering these payments, which will be charged to 5300-51073, are to be forwarded to Ilion Plant Accounting, attention D. C. Brooks. E. G. Larson and R. G. Sherman have been authorized to approve gunsmith invoices for payment.

Costs associated with trigger assemblies, freight, Ilion telephone lines, Arms Service and travel by Ilion personnel will be charged to 5300-51075.

Ilion Plant Accounting will clear these work orders monthly to center fire manufacturing overhead work-in-process accounts and subsequently to finished goods by model based upon quantities of center fire rifles produced to the warehouse. They also will issue monthly and to-date reports similar to the examples listed below:

	Bridgeport	Amount	Ilion	Amount
Gunsmith Repairs*	51073		-	
Trigger Assemblies	-		51075	
Recall Advertising	51073		-	
Consumer Notification	51073		-	
Wholesaler and Dealer Service	51073		-	
Telephone (WATS)	51073		51075	
Special Invoicing Forms	51073		-	
Freight	-		51075	
Miscellaneous (Travel)	-		51075	
Arms Service*	-		51075	
Total				

*Number of Firearms Repaired

Gunsmiths	xxx
Arms Service	xxx
Total	xxx

W. J. Thresher, Sr.

WJT:mrp

NEWS RELEASE

Remington® DUPONT REMINGTON ARMS COMPANY, INC. • PUBLIC RELATIONS • BRIDGEPORT, CONNECTICUT 06602

FOR RELEASE IMMEDIATELY

BRIDGEPORT, Ct., October 25, 1978 -- Remington Arms Company, Inc., announced today that under certain unusual circumstances on some of its center fire bolt action firearms, the safety selector and trigger could be manipulated in such a way that subsequently moving the selector to the fire position could result in accidental discharge. Remington firearms involved are Model 600, 660 and Mohawk 600 rifles and XP-100 pistols manufactured prior to February 1975.

The difficulty can be corrected by installation of a new trigger assembly. In view of the potential safety hazard, the Company is recalling all of these guns produced prior to February 1975 for inspection and modification as required.

Efforts are being made to contact owners of these guns. Individuals who have Model 600, 660 and Mohawk 600 rifles or XP-100 pistols involved in the recall should write to Remington Arms Company, Inc., Bridgeport, CT 06602, or call the following toll-free number for information on procedures:

In all states except Georgia:

800-241-8444 - Ask for Operator 61

In Georgia:

800-282-1333 - Ask for Operator 61

- MORE -

Customers should give the operator the model and serial numbers of their gun when calling.

Serial numbers involved in the recall are as follows:

Remington Model 600s	-From Serial #0001 to 131,552
Remington Model 660s	-From Serial #0001 to 131,552
Mohawk 600s	-From Serial #6,200,000 to 6,899,999
Remington Model 660s	-From Serial #6,200,000 to 6,899,999
Remington XP-100	-From Serial #0001 to 11,000
	-From Serial #7,500,000 to 7,507,983

CONFIDENTIAL-SUBJECT TO PROTECTIVE ORDER
KINZER V. REMINGTON

Bar-700 1321

Marguerite Spring

2/9/2004

RD-6518 Rev 7/83

PROCESS RECORD AND DATA BASE/ENGINEERING CHANGE NOTICE AUTHORIZATION

PROCESS CHANGE NO. 292104

ENG. CHANGE NO. _____

TO BE RETURNED BY _____

INITIATED DATE 7-30-91

ROUTE TO	NAME	APPROVAL	DATE
PE&C SUPERVISOR	R. A. JACKSON	RAJackson	8-3-91
PRODUCTION SUP'R			
PROD. FOREMAN			
	Shirley Willoughby		
ACCOUNTING			
PLANNING			
PURCHASING			
		SW	9-10-91

MODEL NO. 600 700 7LWT ENGINEER L. B. Fleming

PART NAME MAGAZINE SPRING REQUESTED BY H. W. DUNCKEL

PART NUMBER 17891 ECR NO. _____

DCR(IF ANY) _____ COST REDUCTION/INCREASE

DESCRIPTION OF CHANGE AND REASON Delete Dim: .250/min. Dim: .030 was .020.

CLASSIFICATION OF CHANGE

EFFECTIVITY DATE _____ ( ) PHASE OUT ( ) REGULAR

DATA COORDINATOR _____ DATE _____

TITLE: Magazine Spring

Harvey

Process Header

PURCHASED PARTS INSPECTION

Material	: C-1095 C.R. Steel
Heat Treatment At	: Vendor
Component Condition	: Finished X Semi-Fin
Model	: 600 700 7LWT
Part Number	: 17891
Blank Drawing Number	: C-17891
Part Name	: Magazine Spring
Department	: 9291
A. Q. L.	: 3 %
Origination Date	: 26-Sep-1980
Effective Date	: 28-Jun-1991-08:00:00

Final Appearance : Parts to be clean, free of rust, oiled with light rust-proofing oil (SAE #20 or equivalent).

Packaging : The gross weight of any container must not exceed 50 pounds.

Acceptance Testing: Inspection will be based on statistical sampling according to the Sampling Tables of Mil Std 105D for M/24 and according to Mil Std 105D Modified for all other models. Shipments will be accepted if the quality on each of the gages is sufficient to keep within the Average Outgoing Quality Limit listed.

Process History

Status	Date/Time	Status Set	Responsible User
Submitted	15-JUL-1991	12:36:57.24	Shirley Willoughby
Comment:			
Fully Approved	17-JUL-1991	11:15:11.15	R.A.Jackson
Comment:			
Normal Release	17-JUL-1991	11:15:40.90	R.A.Jackson
Comment:			

Process Revision Reasons

Date:	Reason For Revision:	Eng Log #:
18-Jun-1991	Retyped old paper process last Log 288109	SLW 291844

Process Approval List

Approved By:	Badge #:	Date:	Designation:
R.A.Jackson +	00000	17-JUL-1991	Technical Supervisor

Document Number: 17891 Rev:

VAXcamps V2.1 Hardcopy Utility Page: 1 OF 2

CONFIDENTIAL-SUBJECT TO PROTECTIVE ORDER
KINZER V. REMINGTON

TITLE: Magazine Spring

Process Tools

Type	Number	Use	Max	Min
		Set 24 hours for inspection only.		
Snap Gage	B-80024-R	Width	.510	.500
Mics.	Std.	Material thickness	.018	.017
Position Gage	B-53637	Contour		
		With Spring compressed:		
Scale	Std.	Length	2.687	2.657
Mics.	Std.	Height	.250	~~.250~~
Scale	Std.	1. No leaf to be out of alignment more than .030 with any other leaf	.030 ~~.020~~	—
		2. No leaf to be longer than compressed length	2.657	2.687

Document Number: 17891 Rev:

CONFIDENTIAL-SUBJECT TO PROTECTIVE ORDER
KINZER V. REMINGTON

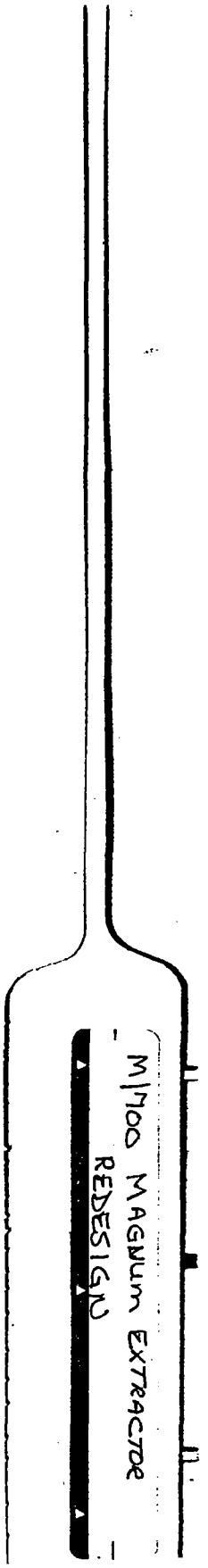
M1700 MAGNUM EXTRACTOR
REDESIGN

7mm WEATHERBY MAG. PROJECT

122508 CAP.
122509 OPER.

#1

#3

CONFIDENTIAL-SUBJECT TO PROTECTIVE ORDER
KINZER V. REMINGTON

DU PONT

SITE NO. | TAX CODE | DIRECT ALL INQUIRIES

☐ 100 OLD WILSON BRIDGE RD. SUITE 212 WORTHINGTON, OHIO 43085-2261
☐ REMINGTON ARMS CO., INC. HOEFLER AVE., ILION, NY 13357
☐

DATE OF ORDER | ISSUED BY

LRI
PURCHASE ORDER NO. | ALT NO.
RELEASE NUMBER
PAGE OF

TERMS OF PAYMENT | REQUIRED SHIP DATE | PROMISED SHIP DATE

F.O.B. ☐ DEST. (DEL'D) ☐ SHIP PT. | FREIGHT TERMS (If Ship Pt. Show City & State) | FREIGHT TERMS ☐ PREPAID ☐ PREPAID ADDED ☐ OTHER (SEE BELOW) ☐ COLLECT*

*If COLLECT, Mail Freight Bill To: FMIS BOX 8444 WILMINGTON, DE 19899

VENDOR CODE

PAYEE CODE

SHIP TO:
E. I. DU PONT DE NEMOURS & COMPANY
c/o REMINGTON ARMS CO., INC.
HOEFLER AVENUE
ILION, NY 13357
ORDER NO. LRI-

SHIP VIA:

INSTRUCTIONS TO VENDOR

PLEASE ENTER OUR ORDER AS SPECIFIED BELOW SUBJECT TO CONDITIONS AND INSTRUCTIONS LISTED ON BOTH THE FACE AND REVERSE SIDE OF THIS PURCHASE ORDER.

1. IF PRICE, TERMS, REQUIRED SHIPPING DATE OR OTHER CONDITIONS AND INSTRUCTIONS ARE NOT ACCEPTABLE IMMEDIATELY ADVISE INDIVIDUAL INDICATED BY RED ARROW ABOVE.
2. FURNISH COMPLETE SHIPPING INFORMATION AND INCLUDE 2 COPIES OF PACKING LIST WITH EACH SHIPMENT. SHOW PURCHASE ORDER NUMBER ON EACH PACKAGE, PACKING LIST, BILL OF LADING, INVOICE AND ALL CORRESPONDENCE.
3. MAIL YOUR INVOICE TO ADDRESS INDICATED BELOW:
   REMINGTON ARMS CO., INC.
   ACCOUNTS PAYABLE DIVISION
   P.O. BOX 179
   ILION, NY 13357
4. DO NOT INSURE U.P.S. OR PARCEL POST. DO NOT DECLARE AIR EXPRESS AND AIR FREIGHT IN EXCESS OF $50.00. IF LOWER CHARGES RESULT TO DUPONT, DECLARED VALUE SHALL NOT EXCEED LOWEST AMOUNT IN APPLICABLE TARIFF.

ITEM	QUANTITY	UNIT	DESCRIPTION (NOUN, ADJECTIVE, MANUF. NAME & NO.)	UNIT PRICE
A	2500		MAGNUM RIVETED EXTRACTORS	
			BLANK NO. 97321	
			DRAWING NO. G97322	

DO NOT WRITE BEYOND THIS LINE

N.Y. SALES & USE TAX EXEMPTION CERTIFICATE
ACCOUNT IDENTIFICATION #06-0507970C ☐ TAX ☐ EXEMPT

CONFIRMING TO: BY: DATE:

REQUISITIONED BY	EXTENSION	REQUISITION APPROVED BY	DATE	AUTH. LEVEL	DATE DELIVERY REQ'D	ESTIMATED WEIGHT	ESTIMATED COST
Edward Ford	481				5/24/91		

ITEM NO.	GENERAL LEDGER ACCOUNT/SUB ACCOUNTS	DETAIL ACCOUNTING	AMOUNT

FRED MARTIN
DELIVERY SPOT # 52-4A R&D
LAST ORDER NO. OR SUGGESTED VENDOR & ADDRESS

REASON VENDOR SELECTED: ☐ LOWEST PRICE ☐ BETTER QUALITY ☐ REQUIRED DESIGN ☐ ONLY KNOWN SOURCE ☐ CONTRACT/P.A. ☐

ORDER APPROVED BY | ORDER EXECUTED BY | D222228 REQUISITION NO.

COPY 2- ☐ WILM. ACCT'S. PAY. ☐ LOCAL ACCT. SECT.

QUOTATION

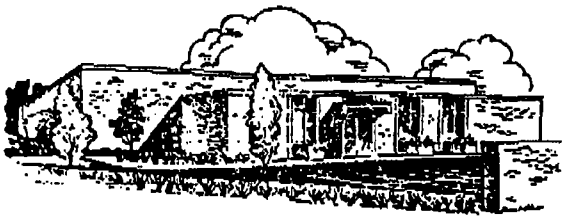

THE H&P DIE & STAMPING COMPANY

216-671-8000
216-671-8000
DIV. OF UNITED SCREW AND BOLT CORP.
Engineering • Development • Tools • Dies • Stampings
Sub-Assemblies • Bus Supplies
4650 Tiedeman Road • Cleveland, Ohio 44144-2395

To REMINGTON ARMS CO.
P.O. BOX 179
ILION, NEW YORK 13357

Attention: Mr. Fred Martin

Date December 19, 1990

Terms 1% 10 days—30 days NET
F.O.B. Our Plant—Cleveland, Ohio

Replying to your inquiry of..... .....we take pleasure in quoting as follows:

Quantity	Description	Price
	Part Number 15709 M700 MAGNUM EXTRACTOR	
	PRICE TO PERMANENTLY MODIFY EXISTING TOOLING TO MAKE PART NUMBER 15709 TO NEW DIMENSIONS:	
	MODIFY 1st. FORM DIE	$1,750.00
	MODIFY FINAL FORM DIE	$2,250.00
	CONTACT : GEORGE HABIEN	
	REQ. NO. : I006417	
	$500 - $700 TO CONVERT BACK. IF NECESSARY	

The above Quotation is subject to acceptance within 30 days from date hereof; thereafter, prices are subject to change without notice, according to fluctuation of market prices of material, over which we have no control. We are not responsible for delays in deliveries due to strikes and conditions beyond our control.

Very truly yours,

H & P DIE & STAMPING CO.

By Ronald Strand

RD-6738 Rev. 2/85

DCR 12616

Sheet 1 of 2

DESIGN CHANGE REQUEST (DCR)

OR

TRANSMITTAL OF DRAWINGS/P~~ARTS LIST~~

OR

PARTS LIST CHANGE NOTICE (~~PLCN~~)

Requested By	Changed By	Date
Edward Ford	F.E.M.	

Originating Date	Transmittal Date
3-11-91	3-11-91

Model	PART NAME/~~LIST~~	Drawing No.	Part No.
700 MAG	EXTRACTOR	C-15709	15709
700 MAG	EXTRACTOR	C-97322	97322

Dwg. NO.	Rev. No.	DESIGN CHANGE
C-15709	–	Obsolete Superceded By Dwg. C-97322
C-97322	–	INITIAL TRANSMITTAL

Classification of Change

( ) Initial Transmittal
( ) Functional Change
( ) Safety Mechanism Revision
( ) Appearance

NOTE: Any or all of the above changes require approval of DCR by Lab Director - New Products Research

(✓) Other

F Martin
DESIGNER SIGNATURE

Reason for Change: HAVE VENDOR PROVIDE FINAL FORM, THEREBY ELIMINATING SECONDARY OPERATIONS HERE AT REMINGTON.

Disposition of Parts on Hand: (Check Below)

( ) Scrap ( ) Alter (✓) Use Inventory ( ) RD 6589 Attached

(P.E.&C: If Part is either scrapped or alte

APPROVED: [signature]

RD 6739

DCR # 12616

Sheet 2 of 2

PARTS LIST CHANGE NOTICE (PLCN)

TRANSMITTAL OF DRAWINGS / PARTS LIST

Requested By	Changed By	Date
Edward Ford		
Originating Date	Transmittal Date	

(PLCN) Use form below if part number is changed / add – used, or superseded.

	Drawing No.	Part No.	Part Name	Qty.
Current Listing	C-15709	15709	EXTRACTOR	1
New Listing	C-97332	97332	"	1
Current Listing	—	97947	EXTRACTOR BLANK	1
New Listing	—	97331	" "	
Current Listing				
New Listing				
Current Listing				
New Listing				
Current Listing				
New Listing				
Current Listing				
New Listing				
Current Listing				
New Listing				
Current Listing				
New Listing				
Current Listing				
New Listing				

NOTE: Please mark your Parts List to agree.

( ) Superseded Part is Obsolete (check disposition below)

( ) Use Up ( ) Scrap ( ) Service Repair ( ) Other Model Use

( ) New Part is: ( ) Steel ( ) Powder Metal ( ) Assembly ( ) Wood ( ) Purchased ( ) Othe

APPROVED: _____ _____ _____

9-28-88

Terry
Is The Fact That Each
One Done On Assy.
Individually Enough To
Accept - A Test With
Extractors Altered To
A Specific Not Approximate
Dim. Would Give Us A
Better Picture Of
Performance - Also Can
Vendor Give Us The
Extractor Needed

1-~~4-8-10~~ Across
~~9-10-11~~ down

700 Mag Left & Right
Reg. Extractor compar to
point and assembl in
guns 20-25

100 Extractor from 1 lot

Fixture in Lab and my
drawings

REMINGTON ARMS COMPANY, INC. – ILION WORKS

Investigator's Copy of Suggestion

NAME James B. Willoughby

SUGGESTION NO.: PEC-17775

CLOCK NO. 9281 - 29460

DATE RECEIVED: 4/12/88

Purchase M/700 Mag. riveted extractor from vendor with free end clipped approx. .150 to .200. (See Attached!)

Suggestors Supervisor - J. R. Balio

SUPERVISION –

This Suggestor is a member of your area. PLEASE GIVE THIS YOUR PROMPT ATTENTION AND COMMENTS.

If the Suggestion should not be adopted, please write your detailed reasons, as the Suggestor deserves every consideration possible.

If it is adaptable, you are expected to expedite its installation or contact the respective Section (Engineering, Production, Safety, PE&C, etc.) for approval or assistance.

When it is in effect, return all answers to the Suggestion Committee Secretary.

T. C. Douglas
I. E.

RD-6562

Secretary, Suggestion Committee

RD 104 Rev. 2

AN OPPORTUNITY TO PUT YOUR IDEAS TO WORK

REMINGTON ARMS COMPANY, INC.

SUGGESTION BLANK

ACCEPTED IDEAS CAN EARN CASH AWARDS

New and original ideas are needed that will improve our products, equipment and methods; that will promote safety and improve our working conditions; that will reduce costs and eliminate waste.

To earn awards suggestions must be specific. It is not ordinarily enough to say that something ought to be done. Tell us what to do and how to do it and how our Company will benefit. Give complete information.

The Company may make full use of any suggestion submitted.

MY SUGGESTION: RE: M/700 MAGNUM RIVETED EXTRACTOR PART # C-15709. ALL MAG. EXTS. BEFORE USE AT SUB-ASSY. HAVE TO HAVE THE FREE END CLIPPED APPROX. .150 TO .200, ALSO THE CURVED SECTION FROM THE CLAW TO THE HOLE IS STRAIGHTENED SEVERELY (SEE ATTACH. SKETCH)

IT CAN BE ACCOMPLISHED BY:

CHANGE THE M/R TO REFLECT THE ALTERATIONS & MAKE THEM RIGHT AT THE VENDORS PLANT.

THIS IDEA WILL ACCOMPLISH: RECEIVING PARTS AT SUB-ASSY. THAT WILL NOT NEED TO BE ALTERED. THERE IS A HIGH DEGREE OF SCRAP FROM ALTERING AT SUB-ASSY. EX: (ENDS CLIPPED TOO SHORT, WRONG BEND [PART TAKES A SET], PARTS BREAK WHEN BEING ADJUSTED). WILL HELP ELIMINATE GUNS WITH DAMAGED EXTRACTORS FROM GETTING TO GALLERY & BEING REJECTED FOR D.X.

THIS WILL ELIMINATE TWO UNNECESSARY OPERATIONS.

Name James B. Williams Dept. & No. 9281-29460 Date 4-12-88

Please make a sketch (on separate sheet) if that will help explain your idea.

The receipt of this suggestion will be acknowledged by the Suggestion Committee.

17775

G-48-A REV. 1-78

ENGINEERING DUPONT COMPUTATION SHEET

SHEET NO. _____

TITLE OF PROJ. OR STUDY M700 MAGNUM EXT. PROJ. OR STUDY NO. _____

SUBJECT _____ WORKS _____

COMPUTER _____ DATE 4-12 19 88

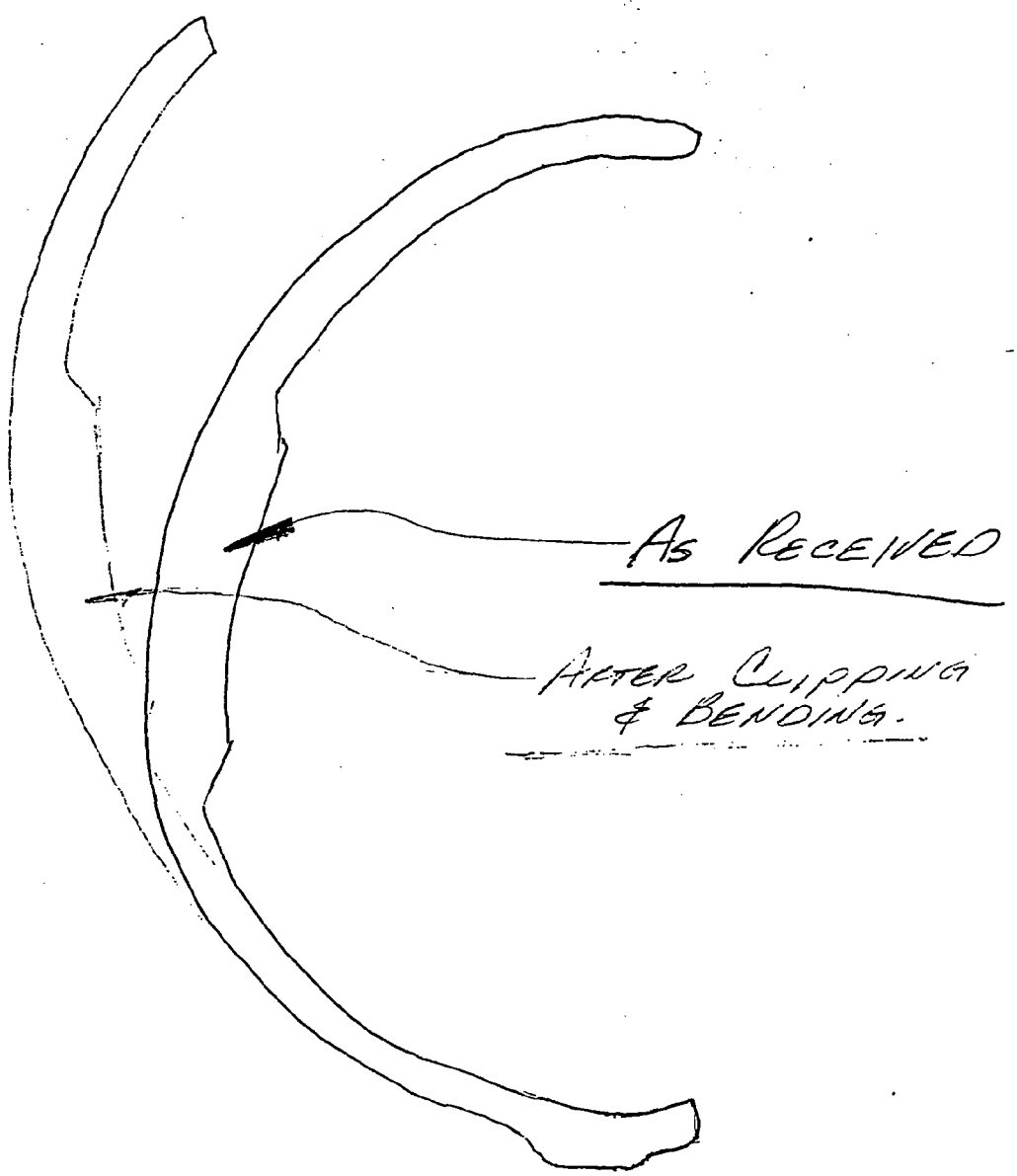

CONTOUR PROJECTION 10X

USE STANDARDS FOR MINIMUM ESSENTIAL INSTALLATIONS

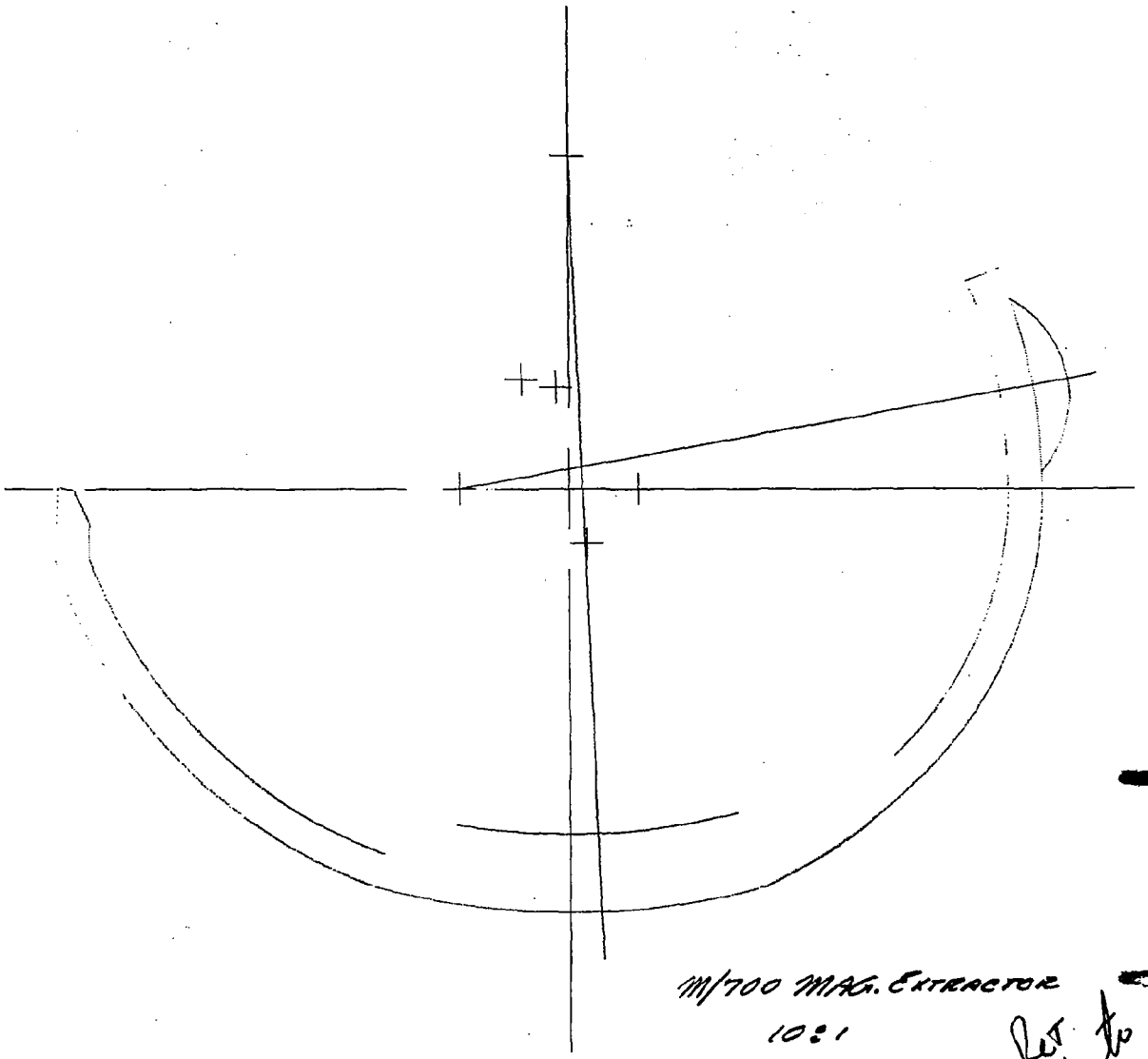

M/700 MAG. EXTRACTOR
10:1

Ret. Martin

[redacted]

[redacted] [redacted]

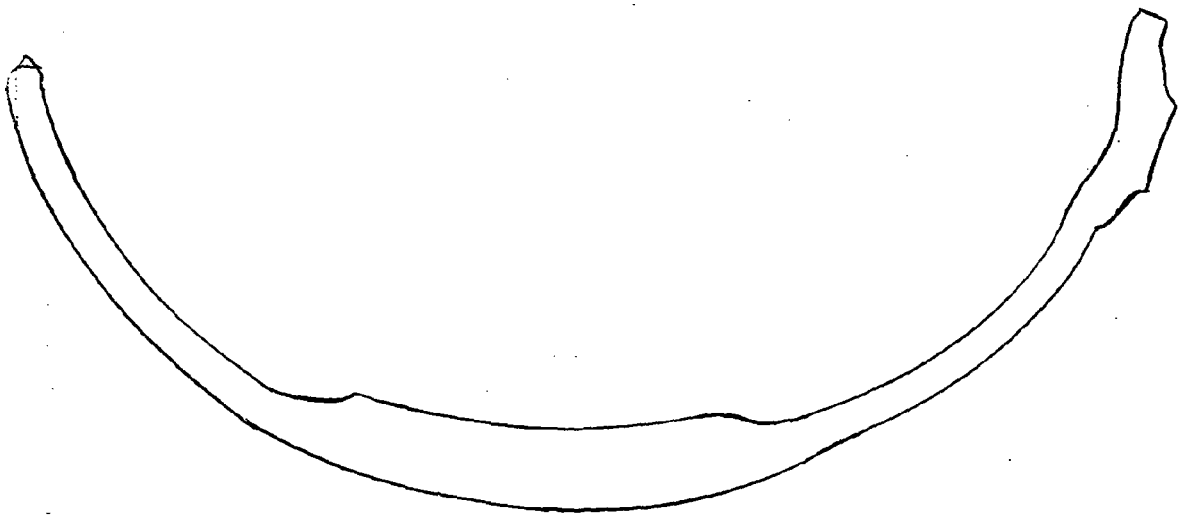

EXTRACTOR AS TRACED FROM COMPARITOR
10:1

MAG. EXT. ALTERED AT ASSY
(BENT ANT TAIL CUT OFF)

Ret
Martin

9/11/88

AFTER HEAT TREAT

M/700 EXTRACTORS SPREAD ON A .705 DIA. PIN

.663	.666	.664	.662
.664	.663	.665	.666
.667	.657	.666	.668
.661	.663	.655	.660
.664	.663	.670	.667
.660	.663	.667	.669
.665	.663	.658	.669
.665	.666	.663	.663
.657	.658	.664	.661
.666	.670	.663	.666
.662	.668	.666	.665
.667	.664	.667	.662
.661	.663	.660	.663
.662	.663	.664	.667
.660	.666	.666	.668
.665	.665	.666	.661
.662	.665	.665	
.663	.660	.656	
.660	.664	.666	
.663	.662	.666	$\bar{X}$ = .66375
.665	.662	.664	σ_{n-1} = .003110
.662	.667	.668	n = 91
.663	.668	.667	Low .655
.657	.665	.663	High .670
.662	.665	.662	

9/11/89

AFTER HEAT TREAT

M/700 EXTRACTORS SPREAD ON A .7251 DIA. BIN

	.667	.671	.683
	.674	.671	.675
	.674	.673	.673
	.673	.663 LOW	.676
	.670	.672	.671
	.675	.673	.671
	.672	.677	.665
HIGH	.676	.673	.674
	.669	.671	.675
	.671	.672	.673
	.676	.666	.677
	.670	.670	.673
	.671	.677	.674
	.665	.669	.675
	.673	.670	.673
	.668	.675	
	.673	.671	
	.670	.669	
	.677	.672	
	.676	.675	
	.678	.676	
	.674	.670	
	.671	.683	
	.673	.664	
	.667	.673	
	.672	.668	

M/700 EXTRACTOR

1. Spreading Fixture
2. 250 Extractors Part # 91929 crib # 31
3. .725 and .705 Roll

Spread 125 Extractors on each roll
Record outside dia. after spreading

Before Heattreat

.705 DIA: HIGH	.663	.725 HIGH:	.676
LOW	.650	LOW:	.664
$\bar{X}$	.65779	$\bar{X}$	
S.D.	.002739	S.D.	

Before Heat treat 8-8-89

M/700 Extractors spread on a .705 Pin

.656	.658	.656	.659	.660
.658	.658	.655	.654	.661
.659	.659	.657	.657	.661
.660	.656	.656	.661	.662
.661	.650	.658	.657	.660
.658	.657	.652	.658	.659
.658	.658	.657	.659	.663
.660	.657	.659	.658	.663
.656	.659	.660	.659	.661
.659	.652	.660	.658	.660
.658	.658	.656	.658	.654
.660	.657	.658	.658	.662
.658	.656	.657	.657	.661
.657	.656	.655	.659	.660
.651	.655	.653	.655	.660
.652	.659	.657	.654	.661
.653	.657	.656	.662	.659
.655	.651	.658	.658	.660
.657	.657	.659	.659	.662
.653	.654	.656	.661	.662
.660	.654	.658	.657	.661
.657	.656	.660	.660	.662
.656	.654	.656	.661	.659
.659	.656	.659	.661	.661
.657	.652	.657	.660	.661

Before Heat treat

M/700 Extractors Spread on a .725 Pin

.671	.671	.671	.670	.669
.666	.672	.670	.668	.671
.668	.670	.671	.670	.671
.670	.672	.671	.672	.673
.670	.668	.670	.668	.668
.671	.672	.672	.673	.669
.669	.669	.676	.669	.671
.668	.672	.672	.669	.665
.669	.670	.672	.670	.671
.669	.672	.668	.672	.670
.672	.671	.670	.672	.672
.667	.668	.668	.668	.671
.667	.671	.674	.672	.672
.666	.670	.668	.670	.672
.668	.667	.670	.671	.673
.666	.672	.672	.672	.666
.668	.674	.664	.670	.670
.673	.672	.670	.671	.672
.672	.672	.668	.672	.670
.670	.668	.672	.669	.668
.672	.669	.671	.671	.672
.670	.667	.664	.668	.672
.671	.669	.672	.670	.671
.671	.670	.670	.670	.667
.673	.670	.672	.674	.668

— M 700 IMPROVEMENT —

United States Patent [19]

Houghton

[11] **Patent Number: 5,020,260**

[45] **Date of Patent: Jun. 4, 1991**

[54] TAKE-DOWN RIFLE

[75] Inventor: **Thomas M. Houghton**, Prescott, Ariz.

[73] Assignee: **H-S Precision, Inc.**, Rapid City, S. Dak.

[21] Appl. No.: **458,777**

[22] Filed: **Dec. 29, 1989**

[51] Int. Cl.[5] F41A 11/00; F41A 21/48

[52] U.S. Cl. 42/75.02; 42/75.01

[58] Field of Search 42/75.02, 75.01

[56] **References Cited**

U.S. PATENT DOCUMENTS

529,455	11/1894	Marlin	42/75.02
534,691	2/1895	Hepburn	42/75.02
605,111	6/1898	Mason	42/75.02
605,734	6/1898	Mason	42/75.02
616,719	12/1898	Mason	200/196
755,660	3/1904	Hepburn	42/75.02
855,181	5/1907	Johnson	42/75.02
1,065,341	6/1913	Browning	42/75.02
1,370,836	3/1921	Nelson	42/75.02
2,789,478	4/1957	McColl	42/75.02
3,877,167	4/1975	Keppeler	42/75.02
4,310,982	1/1982	Kast et al.	42/75.02
4,402,152	9/1983	Casull	42/75.02

Primary Examiner—David H. Brown

Attorney, Agent, or Firm—Richard G. Harrer; Charles E. Cates

[57] **ABSTRACT**

A take-down rifle which permits easy removal and reassembly of the barrel to the receiver portion of the rifle and incorporating a system for effectively accommodating for wear in the mating parts thus providing for proper alignment between the rifle's two main components. The system includes a barrel bracket secured to the forearm, an adjustable collar threaded on the receiver end of the barrel and in contact with the barrel bracket, and the bonding of the barrel to the forearm by means of a low durometer elastomeric adhesive. Adjustment for wear can be made by turning the adjusting collar in a direction to cause the barrel to move in a direction away from the barrel bracket which accommodates for any thread wear between the receiver and the barrel.

13 Claims, 2 Drawing Sheets

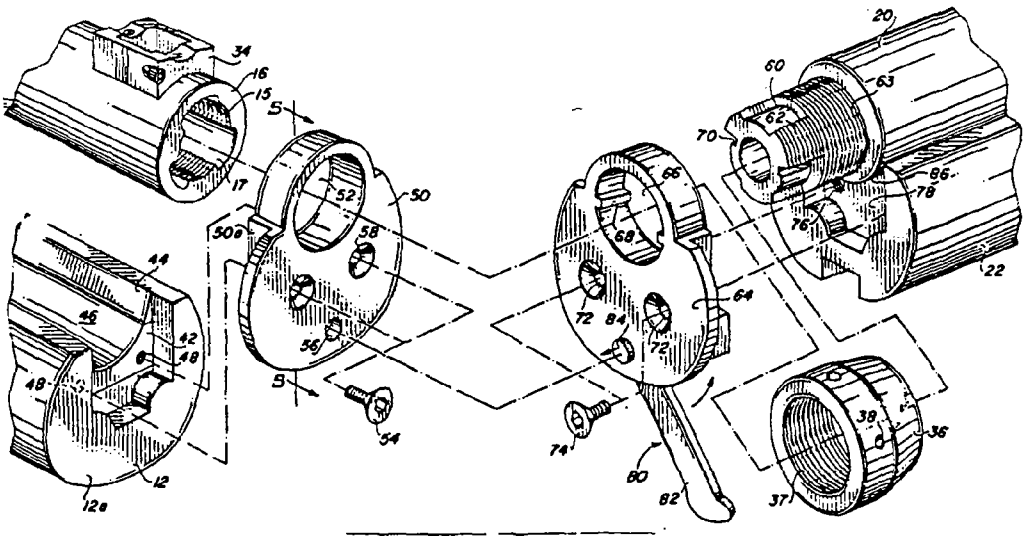

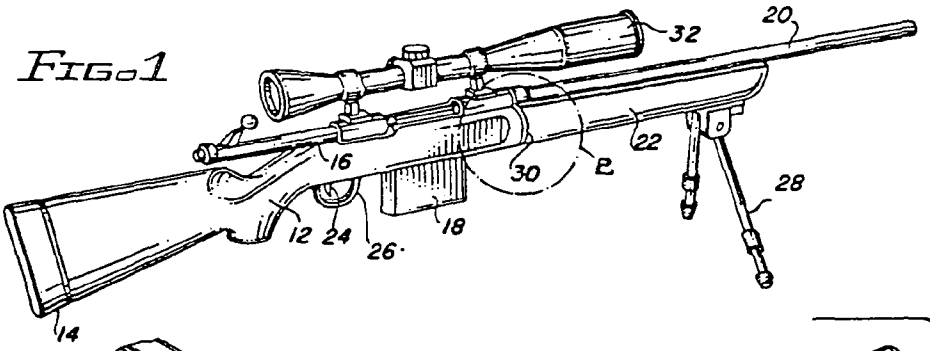

FIG. 1

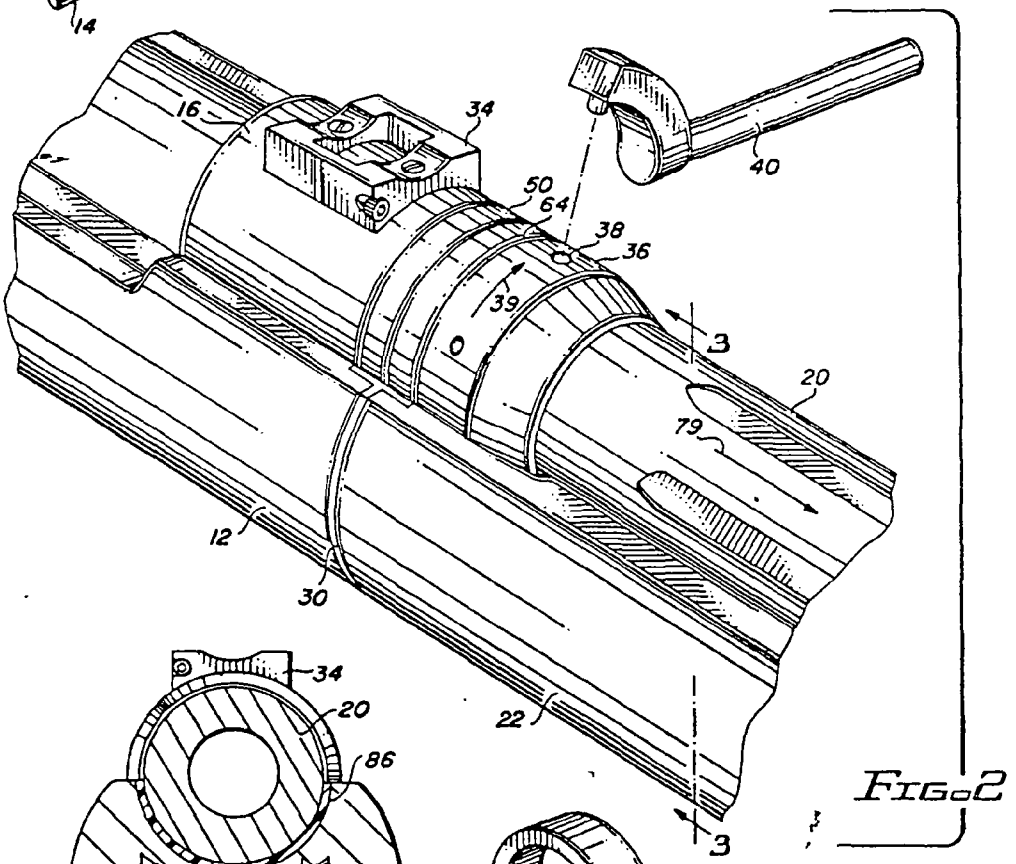

FIG. 2

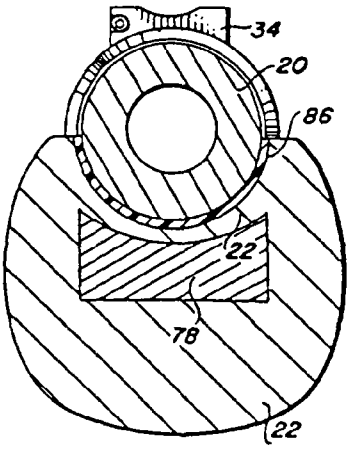

FIG. 3

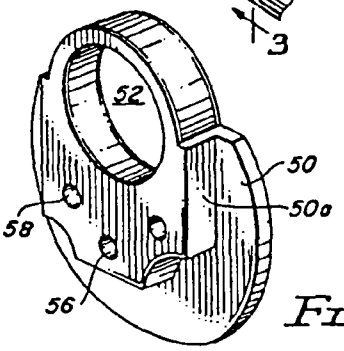

FIG. 5

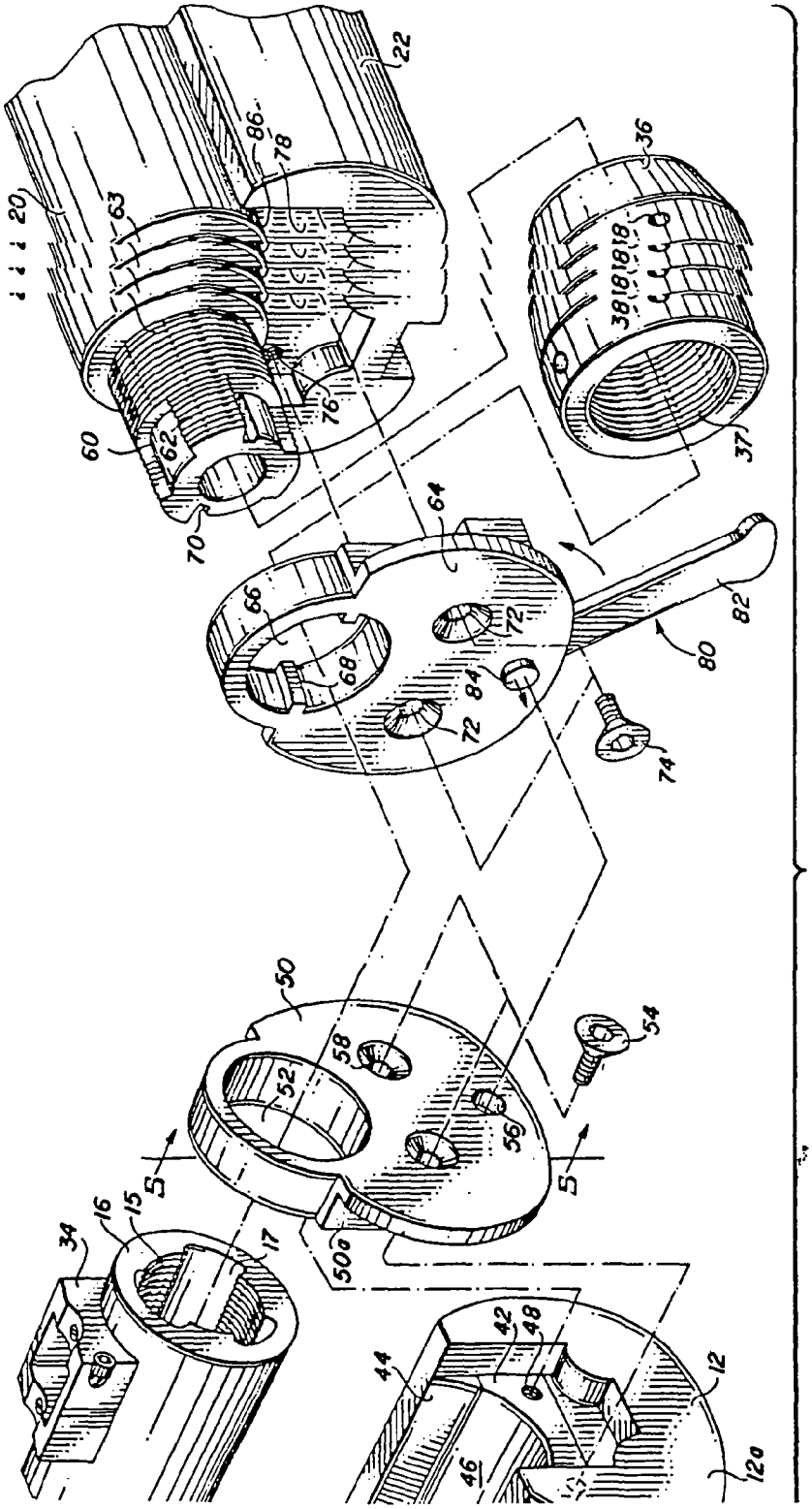
20
22
60
62
63
70
76
78
86
36
37
38
64
66
68
72
84
80
82
74
50
50a
52
54
56
58
5
5
34
16
15
17
42
48
44
46
12
12a

FIG. 4

TAKE-DOWN RIFLE

FIELD OF THE INVENTION

This invention relates to rifles and more particularly to take-down rifles of exceptional accuracy.

BACKGROUND OF THE INVENTION

So-called take-down rifles have been available for many years. The term "take-down rifle" describes a rifle in which the barrel and forearm are readily connected with and detached from stock and receiver frame so as to permit the rifle to be more easily packed. During World War II, the Japanese developed such a rifle for issue to airborne units. A standard bolt action rifle was modified to accommodate a special barrel with interrupted threads at its chamber end that mated with threads on a sleeve provided at the front end of the receiver. Such a rifle proved to be unsuccessful. Thereafter, another version was developed which featured a barrel locked in place by means of a tapered wedge but its accuracy at best was mediocre.

Rifles utilizing a take-down feature are shown in U.S. Pat. Nos. 529,455; 534,691; 605,111; 605,734; 616,719; 755,660; 855,181; 1,065,341 and 1,370,836. In spite of numerous developments in the art of take-down rifles, virtually all such rifles suffer from the inability to hold zero, or repeat the point of aim after the barrel has been removed and reinstalled. Although deviation is probably acceptable for 50 yard plinking rifles, it is not acceptable for long range precision shooting such as may be required for target use or sniper use by the military and law enforcement organizations. In order to obtain the degree of accuracy considered acceptable for sniper or target shooting, all components of any rifle and particularly a take-down rifle must fit together in an extremely tight manner with very close tolerances. Without the means to compensate for wear in mating parts, particularly threadwear, any rifle that is constantly taken apart and reassembled will lose its accuracy resulting in a change in point of impact of the bullet. Consequently, there is a need to provide a take-down rifle that can be taken apart repeatedly and reassembled with provision for maintaining its accuracy.

SUMMARY OF THE INVENTION

Based on the prior art construction of take-down rifles, there then exists a need for means in a take-down rifle which will not only allow for easy removal and reassembly of the barrel to the rifle, but will effectively accommodate for wear in mating parts and particularly thread wear and provide for a perfect or near perfect alignment between the rifle's two main components.

Accordingly, I have invented a system for accommodating such wear. The system includes the use of an adjustable collar which is threaded on and surrounds the barrel at the receiver end of the barrel; the mounting of the barrel to the forearm in such a way that the barrel, although permanently secured to the forearm, is able through operation of the adjustable collar to move a slight distance with respect to the forearm; and provision in the forearm of a special reinforcing member. In a preferred embodiment the barrel is not mounted to the forearm by screws or other types of mechanical fasteners, but is bonded to the forearm by means of a special adhesive, preferably a low durometer elastomeric adhesive. Additionally, and in a preferred embodiment the forearm is made of a non-wood material such as hybrid composites incorporating synthetic fibers of Kevlar, unidirectional graphite, and fiberglass or structural polyurethane foams and utilizing epoxy or polyester based resins as the bonding agents with the reinforcing member incorporated into the forearm to which other mechanical parts of the rifle, such as a barrel bracket are attached.

BRIEF DESCRIPTION OF THE DRAWINGS

FIG. 1 is a perspective view of a bolt action take-down rifle;

FIG. 2 is an enlarged perspective view of the area designated "2" of FIG. 1;

FIG. 3 is a section taken on the line 3—3 of FIG. 2;

FIG. 4 is an exploded perspective view of the area designated "2" of FIG. 1; and

FIG. 5 is a view taken on the line 5—5 of FIG. 4 and showing the receiver bracket.

DETAILED DESCRIPTION OF THE INVENTION

FIG. 1 is a perspective view of a take-down bolt action rifle 10 which incorporates the unique system for mating the take-down barrel with the receiver. As shown, the rifle includes a stock 12 with an adjustable butt plate 14, forearm 22, barrel 20, bolt action receiver 16, detachable box magazine 18, and scope 32 which is appropriately mounted to the receiver by scope mounts 34. The rifle is of course provided with trigger 24 and trigger guard 26. Optionally, the rifle as shown is fitted with a bipod mounted at the front end of the forearm. The area of the rifle where the barrel end and receiver end mate is designated 30.

As shown best in FIG. 4, which is an exploded perspective view of the area of the rifle designated by the numeral 2 of FIG. 1 and shown in enlarged perspective view in FIG. 2, the stock 12 is hollowed out and this hollowed out portion is provided with a bedding block 42 mounted into the hollowed out portion of the stock. Bedding block 42 is preferably fabricated from metal such as aluminum and is machined to provide a curved surface 46 with upper sides 44 being relatively flat and angled. Surfaces 46 and 44 of the bedding block are designed to receive a portion of the barrel action or receiver 16. In mounting the receiver into the bedding block it is preferred that the receiver contact the bedding block basically at three points—in the center of the curved surface 46 and at each angles side 44. Although not shown, the receiver is securely fastened to the bedding block by means of mechanical fasteners such as screws as is well known. In a most preferred embodiment, stock 12 is fabricated from a non-wood material such as a molded composite employing synthetic fibers of Kevlar, graphite and fiberglass or structural polyurethane foams and utilizing epoxy or polyester based resins as the bonding agent. In such an embodiment, the bedding block can be molded directly into the stock.

The forward end of stock 12 is designed to receive metal receiver bracket 50 which bracket is also shown in FIG. 5. The outer edges of receiver bracket 50 are shaped or machined to conform to the exterior shape of the forward end of stock 12 and receiver 16. Receiver bracket 50 is provided with opening 52 which is in alignment with opening 17 at the front end of the receiver. Receiver bracket 50 is also provided with openings 58 in alignment with threaded holes 48 of the bedding block. As shown, the forward end of bedding

BARBER - PRESALE R 0129594

block 42 is positioned a small distance back of the front surface 12a of the stock so that the stock may accommodate the portion 50a of the receiver bracket 50.

The receiver bracket is secured to the front end of stock 12 and specifically to the bedding block by means of fasteners 54 which are screwed into threaded holes 48 of the bedding block.

As best shown in FIGS. 3 and 4, forearm 22 is provided with a reinforcing and mounting member 78 which can be secured into the forearm in much the same manner as is done with bedding block 42 in the stock. Reinforcing member 78 is made of metal, preferably aluminum to save weight and extends throughout substantially the entire length of the forearm. Member 78 should be securely mounted in the forearm and although mechanical fasteners may be used, it is preferable that the forearm be formed of a molded composite of the type as used in the stock with reinforcing member 78 molded into the forearm to give maximum stiffness and strength. As shown, reinforcing member 78 is provided with threaded openings 76 for attachment of barrel bracket 64 and the member is recessed into the forearm a distance to accommodate the barrel bracket 64.

Barrel 20 is mounted into the forearm 22, and, as shown in FIGS. 3 and 4 the barrel is not mechanically fastened to the forearm but is adhesively secured to the forearm. As is shown best in FIG. 3, a layer of flexible elastomeric adhesive 86 is provided between the upper surface of the forearm and the barrel which secures the barrel to the forearm. The type of flexible elastomeric adhesive employed is critical in that the adhesive must be a type that will not only bond the barrel to the forearm in a permanent manner, but will also allow for very slight movement of the barrel of perhaps up to about 0.005 inches during the adjusting process and also be noncorrosive. Thus, the elastomeric adhesive should have a durometer reading ranging from H_A15–H_A90 according to the ASTM (American Society for Testing and Materials) durometer hardness test designated D2240-86 utilizing a type A durometer. Preferably, the durometer reading of the adhesive should range from about H_A30–H_A50 where H_A designates the hardness reading on a type A durometer. Examples of such elastomeric adhesives include those formed from silicones, polyurethanes, polysulphones or flexible epoxy resins. An example of a specific adhesive which works well is a silicone based adhesive available from Dow Corning Company and called Dow Corning 3145 RTV, a non corrosive room temperature curing silicone rubber.

In adhesively securing the barrel to the forearm the following steps should be observed.

1. The mating surfaces of both the barrel and forearm should be clean and dry.
2. A primer* is applied to both surfaces and allowed to dry for a period of about 2 hours.

* Available as Dow Corning 1204 Prime Coat

3. Adhesive is applied to both surfaces and barrel is assembled to the forearm.
4. The entire rifle is then completely assembled prior to curing of the adhesive.
5. The adhesive is tack free at about 2 hours and fully cured at 72 hours.

Barrel bracket 64 is quite similar in construction to receiver bracket 50 and the outer edges of the barrel bracket are shaped or machined to generally conform to the exterior shape of the barrel/forearm portion of the rifle. Barrel bracket 64 is provided with opening 66 which receives a portion of threaded tenon 60 of the barrel 20. To prevent undesirable movement between the barrel and forearm during assembly or disassembly of the rifle, the opening 66 of the barrel bracket is also provided with keys 68 which align with keyways 70 of the threaded barrel tenon. This type of construction insures that the barrel and forearm turn as a unit during assembly or disassembly of the rifle. Barrel bracket 64 is secured to reinforcing member 78 of the forearm by means of threaded fasteners 74 which are inserted through openings 72 in the bracket and into the threaded openings 76 of member 78.

Bracket 78 is also provided with a locking lever system 80 having a lever arm 82 and alignment pin 84. Moving lever arm 82 in a direction either towards or away from the forearm 22 causes alignment pin 84 to move in a direction to or away from the forearm. In an assembled rifle, alignment pin 84 fits into opening 56 of the receiver bracket.

As previously noted, the system for accommodating for thread wear includes an adjusting collar which is threaded on the receiver end of the barrel. As shown in FIGS. 2 and 4, adjusting collar 36 is provided with continuous threads 37 which allows collar 36 to be screwed onto threaded portion 63 of barrel tenon 60. Collar 36 is also provided with depressions 38 on its outer surface to accommodate spanner wrench 40.

Assembly of the barrel end of the rifle including forearm to the receiver end of the rifle is as follows. The receiver bracket 50 has been previously secured to bedding block 42 and barrel bracket 64 has been previously secured to reinforcing member 78 and forearm 22, and collar 36 has been screwed on to threaded portions 63 of barrel tenon 60. As shown in FIG. 4, the end portion of barrel tenon 60 is provided with interrupted threads 62 and, as shown, there are three such sets of interrupted threads. Interior 17 of receiver 16 also has three sets of interrupted threads 15. The portion of barrel tenon 60 with the interrupted threads is placed into the interior 17 of receiver 16 and then the forearm and barrel assembly is turned until the end of the barrel tenon is fully inserted into the receiver 16. At this point the adjacent surfaces of the barrel and receiver brackets will be in contact.

Locking lever 82 is then closed by moving it toward the forearm which causes alignment pin 84 to move into opening 56 of receiver bracket and securely lock and aligh the rifle's two major components together.

The need to adjust for thread wear will be apparent when the two sections of the rifle are screwed together. If one is able to turn the forearm section of the rifle beyond the point where the alignment pin goes into the receiver bracket, then it is likely that adjustment for wear is in order.

Adjustment is accomplished as follows. The two major components are taken apart and adjusting collar 36 is turned in a clockwise direction as shown by the arrow 39 in FIG. 2 by use of spanner wrench 40. Adjusting collar 36 of course bears on barrel bracket 64 which is rigidly secured to reinforcing member 78 of the forearm 22. The barrel bracket therefore does not move so that any force which is brought to bear by turning the adjusting collar against the barrel bracket causes the barrel to move in a direction away from the barrel bracket 64 as shown by the directional arrow 79 in FIG. 2. This movement of the barrel with respect to the forearm is possible because the barrel is adhesively secured to the forearm as previously described.

CONFIDENTIAL-SUBJECT TO PROTECTIVE ORDER
KINZER V. REMINGTON

BARBER - PRESALE R 0129594 R2530582

The need for adjustment depends primarily on the number of times that the rifle has been assembled and reassembled which bears on the amount of thread wear. Certainly, adjustment is not necessary every time the rifle is disassembled and reassembled. It has been found that the amount of barrel movement required for proper adjustment is ordinarily in the range of 0.001 or 0.002 inches. However, it has also been found that barrel movement of up to 0.005 inches is possible.

What is claimed is:

1. A take-down rifle having a stock and receiver secured together as a first unit and a forearm and barrel secured together as a second unit, with the receiver end of said barrel provided with means which engage with said receiver for securing said first and second units together as an assembled rifle, a reinforcing member mounted in said forearm, with said barrel being bonded to said forearm by means of an elastomeric adhesive, a barrel bracket mounted to the receiver end of said forearm and secured to said reinforcing member in said forearm with a portion of said bracket surrounding the receiver end of said barrel, and an adjusting collar positioned about the receiver end of said barrel and in contact with said barrel bracket and said barrel, whereby moving said adjusting collar in a direction toward said barrel bracket will cause said barrel to move in a direction away from said barrel bracket and said receiver end of said rifle to thereby compensate for wear in said means for securing said first and second units together as an assembled rifle.

2. The rifle of claim 1 wherein said elastomeric adhesive has a durometer reading ranging from about H_A1-5-H_A90 utilizing a type A durometer.

3. The rifle of claim 2 wherein said reinforcing member is metal.

4. The rifle of claim 3 wherein said forearm is made of a non-wood material.

5. The rifle of claim 4 wherein said forearm is made of a *molded composite employing synthetic fibers.*

6. The rifle of claim 5 wherein said elastomeric adhesive is a flexible elastomeric adhesive having a durometer reading ranging from about H_A30–H_A50 utilizing a type A durometer.

7. The rifle of claim 6 wherein said elastomeric adhesive includes those formed of silicones, polyurethanes, polysulfones and epoxy resins.

8. The rifle of claim 6 wherein said means which engage with said receiver for securing said first and second units together as an assembled rifle includes a threaded tenon on the receiver end of said barrel, a portion of which engages with a threaded opening in said receiver.

9. The rifle of claim 8 wherein said adjusting collar is positioned on said threaded tenon of said barrel.

10. The rifle of claim 9 wherein a receiver bracket is mounted to said barrel end of said stock and engages the barrel end of said receiver and wherein in an assembled rifle said receiver bracket and said barrel bracket are in contact.

11. The rifle of claim 10 wherein locking and alignment means are provided in said barrel bracket which engage with said receiver bracket.

12. The rifle of claim 11 wherein said stock is provided with a bedding block and wherein said receiver is secured to said bedding block.

13. The rifle of claim 12 wherein said receiver bracket is secured to said bedding block.

* * * * *

EM-6795

COPY DISTRIBUTION:
1. SHIP W/ITEM (PACKING LIST)
2. A/P (LOCAL)
3. STORES
4. REGIONAL PUR.
5. SITE SUSPENSE

E. I. DU PONT DE NEMOURS & COMPANY

MATERIAL EXCEPTIONS & RETURNS

(Covered by P. O. No.)

LOCAL CONTROL # _____

M.O. ~~P.O.~~ # 22668

ROM/ROC # _____

PKG. LIST # _____

FREIGHT/B # _____

DATE REC'D. _____

DATE: 5-13-91

REC'D FROM/RETURN TO (VENDOR) _____

REASON FOR RETURN ☐ DAMAGED ☐ OVERAGE ☐ SHORTAGE ☐ NOT AS ORDERED ☐ PACKING LIST DISCREPANCY ☐ OFF-PLAN SHIPMENT ☐ OTHER

SITE RECEIVING

MATERIAL ORDERED

ITEM/STORES #	QUANTITY	DESCRIPTION	UNIT PRICE (FROM P.O.)

MATERIAL RECEIVED AND/OR MATERIAL TO BE RETURNED — OR MATERIAL TO BE SHIPPED OFF SITE

ITEM/STORES #	QUANTITY	DESCRIPTION	QTY. TO SHIP	BY PURCH'G UNIT PRICE FOR ROM
	1	M700 Sn C620000 2 CAL .30-06	1	
	4	M700 Trigger Guards	4	

USING AREA

MATERIAL _____ ACCEPTABLE (Is — Is Not) ☐ AS SUBSTITUTE ☐ AS OVERAGE ☐ AS ADDITIONAL ITEM ☐ ORIGINAL ITEM _____ REQUIRED (Is — Is Not)

Fred E Martin
REQUISITIONER OR REC'G. SUPERVISOR

SITE APPROVAL

PURCHASING ONLY

DISPOSITION

Date: 5-13-91

Basis For Vendors Use In Developing Magazine

☐ RETURN FOR CREDIT ONLY (SITE ROM REQUIRED) ☐ RETURN FOR REPLACEMENT ONLY ☐ RETURN FOR CREDIT AND REPLACEMENT (SITE ROM REQUIRED) ☒ OFF PLANT SHIPMENT ☐ REPAIR AND RETURN ☐ OTHER

SHIP TO Endicott Machine & Tool Co Inc
STREET AND NO. 101 Delaware Ave
CITY AND STATE Endicott NY 13760
ATTENTION OF Tom Cullen

CHARGE TO _____
STREET AND NO. _____
CITY AND STATE _____

AUTHORIZED BY: _____ LETTER/VERBAL, DATE: _____

MARK PACKAGE _____

ROUTE VIA _____ PPD. CHGS. _____ F.O.B. _____ CASH TERMS _____

☐ PREPAID ☐ COLLECT ☒ CHARGE TRANSPORTATION TO 1118-481152-

REMARKS: (If applicable, show restocking charge here)

(SIGNATURE OF CARRIER/VENDOR REPR. IF MATERIAL PICKED UP AT SITE W/O B/L)

☐ FORMAL ALTERATION WILL BE ISSUED

☐ CONSIDER THIS DOCUMENT AS AN INFORMAL ALTERATION

(PURCHASING AUTHORIZATION)

(REVIEWED) PLANT PURCHASING

SITE

CHARGE CODE _____
WEIGHT _____
B/L # _____
PP/CHARGE _____

22707

SITE ACCOUNTING

THE JEWELL TRIGGER
(Patent No. 4671005)

CUSTOM BENCHREST &
REMINGTON 700

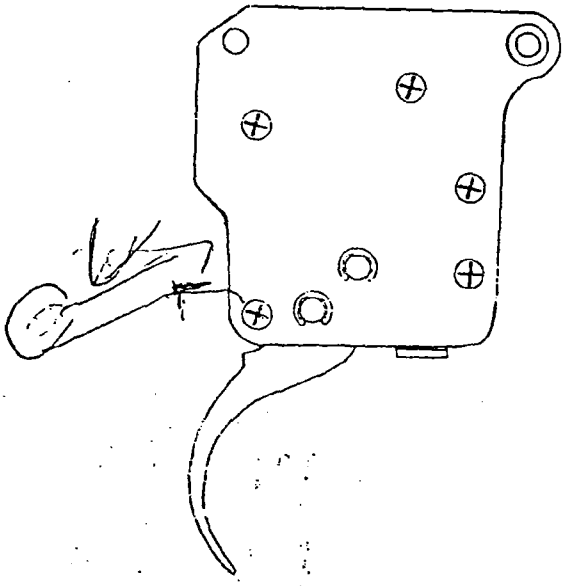

JEWELL TRIGGERS
1922 Lou Ann Drive
New Braunfels, TX 78130
(512) 620-0971

CONFIDENTIAL-SUBJECT TO PROTECTIVE ORDER
KINZER V. REMINGTON

I. GENERAL INFORMATION

Covered by 17 claims in Patent No. 4671005, the unique geometry was designed to allow minimum load at the sear engagement point and to provide maximum adjustability in pull force, sear engagement, and overtravel without removing the action from the stock or the trigger from the action.

II. MATERIALS

A. Internal parts are 3/16" 440C stainless steel, heat treated and tempered throughout to 58 Rockwell C scale.

B Side plates are .050" aircraft grade 300 series stainless sheet steel.

C. All hardware, including through pins, main spring, spacers, and screws, are stainless steel.

CONFIDENTIAL-SUBJECT TO PROTECTIVE ORDER
KINZER V. REMINGTON

PRICE LIST

1.	BR Trigger (1.5 oz. to 5.0 oz.)	$125.00
2.	HVR Trigger (1.5 oz to 4.5 lb. or more)	140.00

OPTIONS

1.	Bottom Lever Safety, R/H	25.00
2.	Bottom Lever Safety, L/H	35.00
3.	Top Lever Safety, R/H	35.00
4.	Top Lever Safety, L/H	45.00
5.	Bolt Release Lever (Rem. 700 Type)	10.00

JEWELL TRIGGERS
1922 Lou Ann Drive
New Braunfels, TX 78130
(512) 620-0971

III. FEATURES

A. Modular design allows total disassembly for maintenance and cleaning.

B. The forward mounting spacer and a pin in the firing pin stop that operates in a hole in the left side plate allows the trigger to stay together as a single assembly when not installed.

C. The light load at the sear enables short, crisp, creep-free, and repeatable operation.

D. **Installation:** The mounting hold pattern allows use in most actions that utilize the Remington 700 type trigger.

E. **Range of Adjustment:**

1. **BR (Light Pull Competition Model):** 1.5 oz. to 5.0 oz.
2. **HVR (Hunting/Varmint Model) with:**
   a. Spring A: 8.0 oz. to 72.0 oz. (4.5 lb.) or more.
   b. Spring B: 2.5 oz. to 16.0 oz.
   c. Spring C: 1.5 oz. to 5.0 oz.

   Note: Settings below those stated is not recommended.

F. OPTIONS

1. Positive Cam Safety (BR or HVR).
   a. Bottom mounted lever, left or right.
   b. Top mounted lever (Rem. 700 type) left or right.
2. Bolt release lever, (Rem. 700 type) left or right.
3. Two-stage operation (HVR only).

CONFIDENTIAL-SUBJECT TO PROTECTIVE ORDER
KINZER V. REMINGTON

BR TRIGGER

The firing pin block (11) is held in the cocked position by the vertical alignment of upper lever (6) and lower lever (7) which is captured in the locked position by sear (5).

Rotation of the trigger shoe (4) releases sear (5) from the upper lever (6) allowing the upper lever (6) and lower lever (7) to collapse to a folded position (See Figure 2), allowing block (11) to fall, thus releasing the firing pin.

The levers (6) and (7) will stay in the collapsed position until the bolt is open, at which time spring (10) forces the levers (6) and (7) back to cocked position. Sear (5) is reset by compression of spring (9).

FIG. 1. (COCKED)

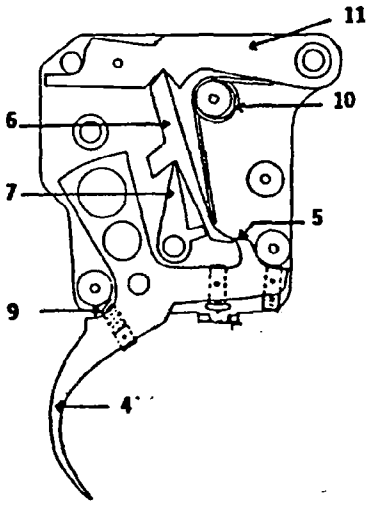

FIG. 2. (FIRED)

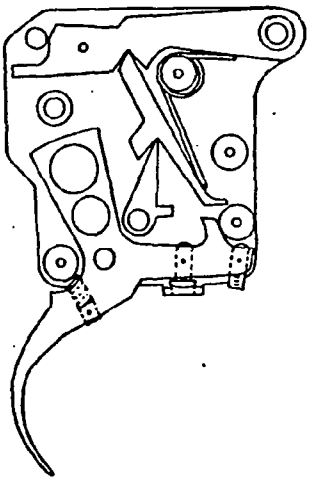

CONFIDENTIAL-SUBJECT TO PROTECTIVE ORDER
KINZER V. REMINGTON

HVR TRIGGER

The firing pin block (11) is held in the cocked position by the vertical alignment of upper lever (6) and lower lever (7) which is captured in the locked position by sear (5).

Rotation of the trigger shoe (4) releases sear (5) from the upper lever sear (8) allowing the upper lever (6) and lower lever (7) tc collapse to a folded position (see Figure 2), allowing block (11) to fall, thus releasing the firing pin.

The levers (6) and (7) will stay in the collapsed position until the bolt is open, at which time spring (10) forces levers (6) and (7) back to cocked position. Sear (5) is reset by rotation of upper lever sear (8) on its pivot pin (13). It is maintained in a down loaded position by the end of spring (10).

FIG. 3. (COCKED)

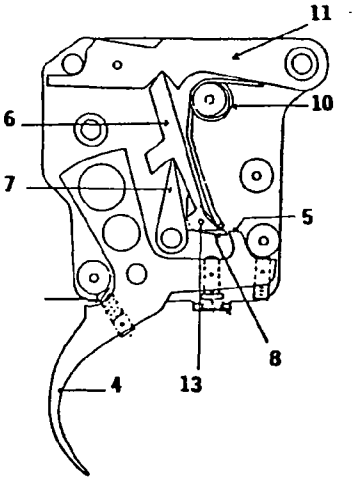

FIG. 2. (FIRED)

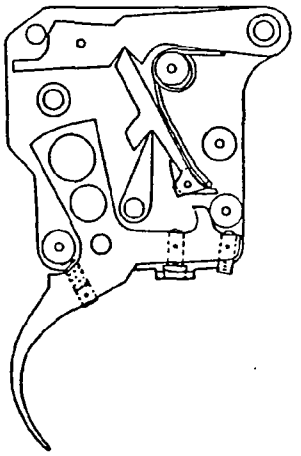

CONFIDENTIAL-SUBJECT TO PROTECTIVE ORDER
KINZER V. REMINGTON

ADJUSTMENT PROCEDURES (BR and HVR)

The trigger has been adjusted for most applications when shipped. Personal preference, however, may require adjustment on one or more settings.

All adjustment screws are fitted with Nylon inserts to maintain their set positions. The use of external locking compounds is not necessary.

Screw (1) sets sear engagement (in = less sear engagement).
Screw (2) sets overtravel (in = more overtravel).
Screw (3) sets pull force (in = more pull force).

Initial Adjustment Procedure:

1. Ensure that rifle is ***unloaded ! ! !***
2. Cock action, turn screw (1) inward until action fires. Back screw out approximately 3/4 turn.
3. Recock action, turn screw (2) out until it contacts tab (12). While applying pull on the trigger shoe, turn screw inward until action fires. Turn screw inward another 1/4 turn.
4. Recock action and measure pull force. Turn screw (3) in for more pull force or out for less pull force. Do not exceed specifications for pull settings.
5. Operate action for your particular method of shooting and adjust as needed.

Note: ***Rapid firing practices may require slightly more sear engagement or pull force to prevent unwanted firing.***

Cleaning: Flush occasionally with lighter fluid. The use of lubricants is not recommended.

CONFIDENTIAL-SUBJECT TO PROTECTIVE ORDER
KINZER V. REMINGTON

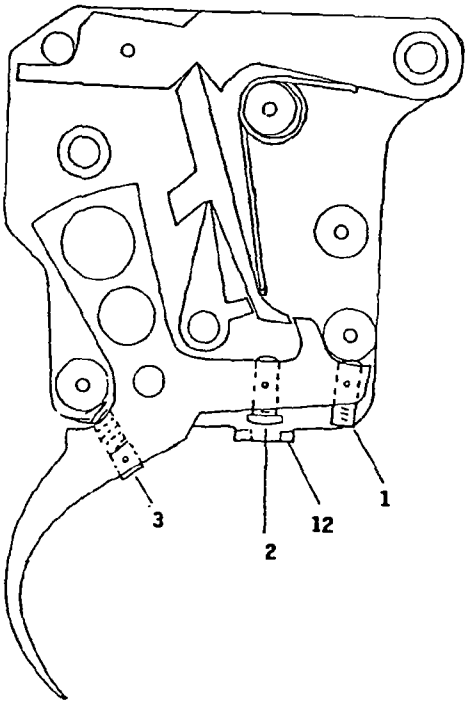

CONFIDENTIAL-SUBJECT TO PROTECTIVE ORDER
KINZER V. REMINGTON

R2530592

M/700

BOORUM & PEASE "NOTEAR" ®

BOORUM & PEASE "NOTEAR"

Rev. 1-14-80

REVISED 8-7-79

REMINGTON STANDARDS - ARMS

MODEL 700 1974 Version	5-Shot Group Size	Test Ammo.
BOLT ACTION REPEATER	(C to C)	(Gr.)
CALIBERS (Center Fire)		
(3) 7mm Mauser	3.5"	175 SP
222 Rem.	2.2"	50 HPPL
22-250 Rem.	2.2"	55 HDPL
17 Rem.	2.2"	25 HPPL
6mm Rem.	2.2"	80 HPPL
243 Win.	2.2"	100 SP
308 Win.	3.5"	180 PSP
30-06	3.5"	220 SP
270 Win.	3.5"	150 SP
25-06 Rem.	2.2"	87 HPPL
7mm Rem. Mag.	2.7"	175 PSP
264 Win. Mag.	2.2"	140 SP
300 Win. Mag.	3.5"	180 SP
375 H. H. Mag.	3.5"	270 SP
458 Win. Mag.	3.5"	510 SP
(1) 8mm Rem. Mag.	3.5"	220 PSP
(2) 7 mm Exp. Rem.	3.5"	165 SP
CALIBERS (Varmint)*		
(4) 7mm-08 Rem.	1.5"	140 PSP
222 Rem.	1.5	50 PL
223 Rem.	1.5	50 PL
22-250 Rem.	1.5	55 PL
6mm Rem.	1.5	80 PL
243 Win.	1.5	80 PL
25-06	1.5	87 PL
308 Win.	1.5	168
CALIBER (SNIPER)		
7.62 NATO	2.0	168

* Current production lists 1.5" (inside to inside) for all Varmint calibers.

(1) Added
(2) Added 7 mm Exp. Rem.
(3) Added 7mm Mauser
(4) Added

CONFIDENTIAL-SUBJECT TO PROTECTIVE ORDER
KINZER V. REMINGTON
BARBER - PRESALE R 0129606
R2530594
BARBER - PRESALE R 0129606

Rev. 1-14-80
REVISED 8-7-79

REMINGTON STANDARDS - ARMS

MODEL 700 1974 Version	TWIST R. H.	GROOVE No.	BORE (LAND) DIA.	BORE (LAND) WIDTH	GROOVE DIA.	GROOVE WIDTH
BOLT ACTION REPEATER						
(Center Fire)						
(4) 7mm Mauser	9¼"	6	.277"	.035"	.284"	.110"
*222 Rem.	14"	6	.219"	.035"	.224"	.080"
*25-06 Rem.	10"	6	.250	.036	.2568"	.096"
*22-250 Rem.	14"	6	.219"	.035"	.224"	.080"
223 Rem. (Varmint only)	12"	6	.219"	.035"	.224"	.080"
*6mm Rem.	9 1/8"	6	.237"	.032"	.243"	.090"
*243 Win.	9 1/8"	6	.237	.032"	.243"	.090"
270 Win.	10"	6	.270"	.036"	.277"	.105"
30-06 Spqfd.	10"	6	.300"	.042"	.308"	.115"
308 Win.	10"	6	.300"	.042"	.308"	.115"
7mm Rem. Mag.	9 1/4"	6	.277"	.035"	.284"	.110"
264 Win. Mag.	9"	6	.256"	.039"	.264"	.095"
300 Win. Mag.	10"	6	.300"	.042"	.308"	.115"
375 H. & H. Mag.	12"	6	.366"	.077"	.376"	.115"
458 Win. Mag.	14"	6	.450"	.086"	.458"	.150"
17 Rem.	9"	6	.168"	.026"	.172"	.063"
(1) 8mm Rem. Mag.	10"	6	.316"		.324"	.125"
308 Win. (Varmint)	12"	6	.300	.042"	.308"	.115"
(3) (2) 7 mm Exp. Rem.	9 1/4"	6	.277"	.035"	.284"	.110"
* Also Varmint Use.						
(5) 7mm-08 Rem.	9- 1/4"	6	.277"	.035"	.284"	.110"
(Varmint)						

(1) Added
(2) Added 7 mm Exp. Rem.
(3) Revised Rifling Specs.
(4) Added
(5) Added

CONFIDENTIAL-SUBJECT TO PROTECTIVE ORDER
KINZER V. REMINGTON
BARBER - PRESALE R 0129607
R2530595
BARBER - PRESALE R 0129607

REVISED 8-7-79

REMINGTON STANDARDS - ARMS

MODEL 700 1974 Version	5-Shot Group Size	Test Ammo.
BOLT ACTION REPEATER	(C to C)	(Gr.)
CALIBERS (Center Fire)		
(3) 7mm Mauser	3.5"	175 SP
222 Rem.	2.2"	50 HPPL
22-250 Rem.	2.2"	55 HDPL
17 Rem.	2.2"	25 HPPL
6mm Rem.	2.2"	80 HPPL
243 Win.	2.2"	100 SP
308 Win.	3.5"	180 PSP
30-06	3.5"	220 SP
270 Win.	3.5"	150 SP
25-06 Rem.	2.2"	87 HPPL
7mm Rem. Mag.	2.7"	175 PSP
264 Win. Mag.	2.2"	140 SP
300 Win. Mag.	3.5"	180 SP
375 H. H. Mag.	3.5"	270 SP
458 Win. Mag.	3.5"	510 SP
(1) 8mm Rem. Mag.	3.5"	220 PSP
(2) 7 mm Exp. Rem.	3.5"	165 SP
CALIBERS (Varmint)*		
222 Rem.	1.5	50 PL
223 Rem.	1.5	50 PL
22-250 Rem.	1.5	55 PL
6mm Rem.	1.5	80 PL
243 Win.	1.5	80 PL
25-06	1.5	87 PL
308 Win.	1.5	168
CALIBER (SNIPER)		
7.62 NATO	2.0	168

* Current production lists 1.5" (inside to inside) for all Varmint calibers.

(1) Added
(2) Added 7 mm Exp. Rem.
(3) Added 7mm Mauser

RD-6469

CONFIDENTIAL-SUBJECT TO PROTECTIVE ORDER
KINZER V. REMINGTON
BARBER - PRESALE R 0129608
R2530596
BARBER - PRESALE R 0129608

REVISED 8-7-79

REMINGTON STANDARDS - ARMS

MODEL 700 1974 Version	TWIST R. H.	GROOVE No.	BORE (LAND) DIA.	BORE (LAND) WIDTH	GROOVE DIA.	GROOVE WIDTH		
BOLT ACTION REPEATER								
(Center Fire)								
(4) 7mm Mauser	9¼"	6	.277"	.035"	.284"	.110"		
*222 Rem.	14"	6	.219"	.035"	.224"	.080"		
*25-06 Rem.	10"	6	.250	.036	.2568"	.096"		
*22-250 Rem.	14"	6	.219"	.035"	.224"	.080"		
223 Rem. (Varmint only)	12"	6	.219"	.035"	.224"	.080"		
*6mm Rem.	9 1/8"	6	.237"	.032"	.243"	.090"		
*243 Win.	9 1/8"	6	.237	.032"	.243"	.090"		
270 Win.	10"	6	.270"	.036"	.277"	.105"		
30-06 Spqfd.	10"	6	.300"	.042"	.308"	.115"		
308 Win.	10"	6	.300"	.042"	.308"	.115"		
7mm Rem. Mag.	9 1/4"	6	.277"	.035"	.284"	.110"		
264 Win. Mag.	9"	6	.256"	.039"	.264"	.095"		
300 Win. Mag.	10"	6	.300"	.042"	.308"	.115"		
375 H. & H. Mag.	12"	6	.366"	.077"	.376"	.115"		
458 Win. Mag.	14"	6	.450"	.086"	.458"	.150"		
17 Rem.	9"	6	.168"	.026"	.172"	.063"		
(1) 8mm Rem. Mag.	10"	6	.316"		.324"	.125"		
308 Win. (Varmint)	12"	6	.300	.042"	.308"	.115"		
(3) (2) 7 mm Exp. Rem.	9 1/4"	6	.277"	.035"	.284"	.110"		
* Also Varmint Use.								
(1) Added								
(2) Added 7 mm Exp. Rem.								
(3) Revised Rifling Specs.								
(4) Added								

RD-6489

CONFIDENTIAL-SUBJECT TO PROTECTIVE ORDER
KINZER V. REMINGTON
BARBER - PRESALE R 0129609
R2530597
BARBER - PRESALE R 0129609

CONFIDENTIAL-SUBJECT TO PROTECTIVE ORDER
KINZER V. REMINGTON

MODEL 700 1974 Version	ADL Grade	BDL Grade
BOLT ACTION REPEATER		
ACCURACY	Use open sights, fore-end and elbow rest. Set rear sight eyepiece on fourth mark from rear on ramp and centered.	
Test Ammunition:	See Accuracy Index.	
Group Size:	See Accuracy Index.	
Center of Impact:	Not more than 6 inches below, or 2 inches above, or 6 inches either side of point of aim.	
Point of Aim:	6 o'clock on target.	
Range:	100 yds.	
ACTION	Bolt action, center fire, hand operated repeater. Solid frame with take-down stock. Fixed magazine. Bolt cocks as handle lifts. Rifle cocks as bolt handle is lowered to lock action closed. Extracts and ejects as bolt is "opened". Direct action trigger. 2 stop safety. FIRE position – forward SAFE position – rearward. Rear position on safety locks bolt closed.	
(4) Short Action Calibers	222, 308 243, 6mm 22-250	222, 308, 7mm-08 Rem. 243, 6mm 22-250, 17 Rem.
(2) Long Action Calibers:	30-06, 25-06 270, 7mm 7mm Exp. Rem.	30-06, 25-06, 7 mm Exp. Rem. 270, 7mm 264, 300 Mag.
(1) (3)	7mm Mauser	8mm Rem. Mag
	Action must feed, fire, extract and eject (include extraction and ejection without firing), satisfactorily with all varieties of ammunition listed as standard for listed calibers in Technical Committee Manual of the Sporting Arms and Ammunition Manufacturers' Institute (SAAMI)	

(1) Added 8mm Rem. Mag.
(2) Added 7 mm Exp. Rem.
(3) Added 7mm Mauser
(4) Added 7mm-08

BARBER - PRESALE R 0129610
BARBER - PRESALE R 0129610
R2530598

CONFIDENTIAL-SUBJECT TO PROTECTIVE ORDER
KINZER V. REMINGTON

BARBER - PRESALE R 0129611

MODEL 700 1974 Version			ADL Grade		BDL Grade			
ANNOUNCEMENT		(Discontinued)						
(3) 7mm Mauser	1980							
30-06	1962							
270 Win.	1962							
222 Rem.	1962							
7mm Rem. Mag.	1962							
264 Win. Mag.	1962							
300 Win. Mag.	1964							
308 Win.	1962							
243 Win.	1962							
25-06 Rem.	1970							
6mm Rem.	1963							
22-250 Rem.	1965							
17 Rem.	1971							
6.5 Rem. Mag.	1969	1972						
350 Rem. Mag.	1969	1972						
(1) 8mm Rem. Mag.	1977				*			
(2) 7 mm Exp. Rem.	1979							
(4) 7mm-8 Rem.	1980							
BARREL	Round, tapered to breech, crowned, Black color, Medium lustre.							
Material:	Remington specified alloy steel. Stainless steel for 17 Rem. only.							
Bore – Groove:	See Rifling Index.							
Optional Barrel:			w/o Sights		w/o Sights.			
Markings:	See Marking – Barrel.							
BOLT ASSEMBLY:	3 piece brazed assembly – Bolt body, Bolt head, Bolt handle Includes Firing Pin Assembly.							
Bolt Plug:	Cover firing pin head. Black color							
Bolt Handle:	Swept back oval shape ball. Checker on upper and lower face of ball. Black color							
Bolt Body:	Bright Steel – damascene finish.							
Bolt Head	Black color.							
Feature	Anti-bind design							
Markings:	See Markings – Bolt							
Size:								
Short	222, 17 Rem							
(4) Short Std.	243, 6mm, 308, 22-250, 7mm-08 Rem.							
(2) (3) Standard	30-06, 270, 25-06, 7 mm Exp. Rem. 7mm Mauser							
(1) Magnum	7mm, 264, 300 Mag., 8mm Rem. Mag.							
(1) Added 8mm Rem. Mag.	(2) Added 7 mm Exp. Rem.		(3) Added 7mm Mauser		(4) Added 7mm-08 Rem.			

BARBER - PRESALE R 0129611
R2530599

CONFIDENTIAL-SUBJECT TO PROTECTIVE ORDER
KINZER V. REMINGTON

BARBER - PRESALE R 0129612

MODEL 700 1974 Version	ADL Grade	BDL Grade
BOLT RELEASE	Located to front of trigger, Black color.	
BUTT PLATE	Screw (2) fitted. Black plastic, corrugated surface	
(1) Caliber use:	30-06, 25-06, 222, 22-250, 270, 243, 308, 6mm, 17 Rem., (See recoil pad for magnum calibers).	7mm-08
EJECTOR	Plunger Type, spring loaded, pin assembled to bolt head.	
EXTRACTOR	Circular, clip type, riveted inside bolt head.	
FIRING PIN	Spring retracted in bolt.	
Indent	.018" Min. – .026" Max. (Use copper crusher)	
Protrusion	.045" Min. – .075" Max.	
FLOOR PLATE	Black metal. Latch in trigger guard.	
Use	No	Yes
FORE-END (Cap)	Black plastic – bonded to stock.	
Use	No	Yes
Spacer	---	White Plastic
GRIP CAP	Black plastic – bonded to stock.	
Use	No.	Yes
Spacer	---	White plastic

(1) Added 7mm-08

BARBER - PRESALE R 0129612
R2530600

CONFIDENTIAL-SUBJECT TO PROTECTIVE ORDER
KINZER V. REMINGTON

BARBER - PRESALE R 0129613

MODEL 700 1974 Version			ADL Grade		BDL Grade
GUN LENGTH & WEIGHT:					See below
	Barrel	Receiver	Overall	Weight	Weight
243 Win.	22"	Short	41 5/8"	7 lbs.	Add 4 oz.
308 Win.	22"	"	"	"	Sling, etc.
6mm Rem.	22"	"	"	"	
(2) 7 mm Exp. Rem.	22"	Long	42 1/2"	"	
30-06	22"	Long	42 1/2"	7 lbs.	Sling, etc.
270 Win.	22"	"	"	"	
(3) 7mm Mauser	22"	"	"		
17 Rem.	24"	Short	43 5/8"	7 lbs. 4 oz.	Sling, etc.
222 Rem.	24"	"	"	"	
22-250	24"	"	"	"	
(4) 7mm-08 Rem.	24"	"	"	8 lbs. 15 oz.	(Max.) Sling, etc.
7mm Rem. Mag.	24"	Long	44 1/2"	7 lbs. 8 oz.	Sling, Etc.
25-06 Rem.	24"	"	"	"	
264 Win. Mag.	24"	"	"	"	
300 Win. Mag.	24"	"	"	"	
(1) 8mm Rem. Mag.	24"	"	"	"	Sling, Etc.
MAGAZINE	Fixed box. Stagger column loading.				
Capacity:	(Add one (1) for Gun Capacity)				
5 ctgs.	222, 17 Rem				
(2)(4) 4"	22-250, 243, 308, 6mm, 270		30-06, 25-06	7 mm Exp. Rem, 7mm-08	
3"	7mm, 264, 300 Mag.				
Floor Plate	(hinged with latch)		None		Yes
Follower:	* Polished Stainless Steel				
Loads: (or unloads)			Top only		Top & Bottom

* Finish corrected. Was bright nickel.

(1) Added
(2) Added 7 mm Exp. Rem.
(3) Added
(4) Added

BARBER - PRESALE R 0129613
R2530601

CONFIDENTIAL-SUBJECT TO PROTECTIVE ORDER
KINZER V. REMINGTON

BARBER - PRESALE R 0129614

MODEL 700 1974 Version			ADL Grade		BDL Grade			
STOCK (Continued)								
Dimensions (Nominal – 30-06			See Below		See ADL Grade			
Drop at Heel (from ℄ of barrel)			1 5/16"		"			
Drop at Comb & Monte Carlo (From ℄ of bbl.)			11/16"		"			
Length of Pull			13 3/8"		"			
Length of Grip			3 3/8"		"			
Pitch (from ℄ of barrel)			2 7/8"		"			
Fore-end Cap (black plastic)			No		Yes			
Spacer (white plastic)			--		Yes			
Grip Cap (black plastic)			No		Yes			
Spacer (white plastic)			--		Yes			
Swivels (2) 7/8" Q. D. (Quick Detachable)			No		Yes			
(1) Weight (7mm-08 Varmint)					2 lbs. - 7oz. Max.			
TRIGGER	Direct action, black metal, wide serrated finger piece, full radius.							
Pull (Wt.)	3 lbs. Min. – 5 lbs. Max. (with wt. sealed at factory).							
Engagement	Adjustment sealed at factory.							
TRIGGER GUARD	Aluminul alloy, black color. Anodized – High Lustre							
Type			Short		Long (with floor plate)			
WEIGHT	(See Gun Length & Weight)							
(1) Added								

BARBER - PRESALE R 0129614
R2530602

CONFIDENTIAL-SUBJECT TO PROTECTIVE ORDER
KINZER V. REMINGTON

BARBER - PRESALE R 0129615

3-3-76

REVISED 9-19-75

REMINGTON STANDARDS - ARMS

MODEL	700 BDL VARMINT	222 Rem.	223 Rem.	22/250 Rem.	6MM Rem.	243 Win	(2) 25–06 Rem.	308 (3) Win.
Note: All specifications same as M/700 BDL								
		EXCEPT AS LISTED HEREIN						
ACCURACY (C to C)								
Max. Group Size (5 Shots)	E. S.	1.5"	1.5"	1.5"	1.5"	1.5"	1.5"	1.5"
All Rifles Must Pass A 5–Shot Specification								
Range	100 yards. Use Accuracy Device.							
Ammunition	(Power–Lock) or equiv.	50gr.	55gr.	55gr.	80gr.	80gr.	87 gr	162gr. or 168gr Match
ACTION		Short	Short	Short	Short	Short	Long	Short
	Bolt action, handle operated repeater, Solid frame with long stock. Fixed magazine, latched floorplate for bottom unloading, if desired, 2–stop safety, forward to FIRE position rearward to SAFE position.							
	Action must feed, fire, extract, eject (include extraction and ejection without firing), satisfactorily with all varieties of ammunition listed as standard for listed calibers in Technical Committee Manual of the Sporting Arms and Ammunition Manufacturers' Institute (SAAMI).							
ANNOUNCEMENT:								
Varmint Model Release to Production:	General Management Approval March 16, 1966. See letter V. G. DeReus to Management dated March 18, 1966.							
(2) Ref: Intro. 1971. See OP Comm Min No. 7–1970 Dated 4–3–70.								
(3) Added Ref. Operations Committee Development Schedule for 1976.								
(4) Changed 308 Cal. bullet grain from 150 to 162 or 168 Match.								

RD-6489

BARBER - PRESALE R 0129615
R2530603

CONFIDENTIAL-SUBJECT TO PROTECTIVE ORDER
KINZER V. REMINGTON

BARBER - PRESALE R 0129616

9-19-75

REVISED 4-6-71

REMINGTON STANDARDS - ARMS

MODEL	700 BDL VARMINT	222 Rem.	223 Rem.	22-250 Rem.	6mm Rem.	243 Win.	25-06 Rem.	308 (1) Win.
BARREL (HEAVY):	Round, tapered, colored black. Crowned same as 40X-B. Remington Specification alloy steel.							
Caliber:	See Tabulations.							
Length:	24 inches (All calibers).							
Markings:	Same as M/700							
Sight Holes:	Two (2) one rear taper.							
*Rifling:								
Bore	Min.	.219	.219	.219	.237	.237	.250	.300
	Max.	.220	.220	.220	.238	.238	.251	.301
Groove	Min.	.224	.224	.224	.243	.243	.257	.308
	Max.	.2245	.2245	.2245	.2435	.2435	.2575	.309
Twist	(1 Turn) R.H.	14 inches.	12 inches	14 inches	9 1/8 inches	9 1/8 inches	10 inches	12 inches
CAPACITY								
Gun		6	6	5	5	5	5	5
Magazine		5	5	4	4	4	4	4
RECEIVER:		Short	Short	Short	Short	Short	Long	Short

*See Model Drawings.

(1) Added Ref. Operations Committee Development Schedule for 1976

RD-6489

BARBER - PRESALE R 0129616
R2530604

CONFIDENTIAL-SUBJECT TO PROTECTIVE ORDER
KINZER V. REMINGTON

BARBER - PRESALE R 0129617

REVISED 3-3-76
9-19-75

REMINGTON STANDARDS - ARMS

MODEL	700 BDL VARMINT	222 Rem.	223 Rem.	22/250 Rem.	6MM Rem.	243 Win.	25-06 Rem.	308 (1) Win.
GUN LENGTH: (Inches)		43 5/8	43 5/8	43 5/8	43 5/8	43 5/8	44 1/2	43 5/8
SCOPE BASES:	Front & Rear (40X-B type).							
* PACKING: Same as standard Grade except (Shipping)								
Weight – 1 Gun	11 lbs.							
Weight – 2 Gun	20 lbs.							
Weight – 3 Gun	30 lbs.							
Weight – 5 Gun	49 lbs.							
STOCK:	Same as M/700 BDL Except: modified barrel radius.							
Receiver Cut		Short	Short	Short	Short	Short	Long	Short
WEIGHT:	(with sling) 9 lbs. (dependent upon caliber).							
(2) TRIGGER PULL: (Weight)								2-4 lbs.

* Shipping weight revised per W. W. Fenton (warehouse)

(1) Added. Reference Operations Committee Development Schedule for 1976.
(2) Added Trigger pull for 308 Win. Cal.

RD-6469

BARBER - PRESALE R 0129617 R2530605

CONFIDENTIAL-SUBJECT TO PROTECTIVE ORDER
KINZER V. REMINGTON

3-14-78

3/23/77
REVISED

REMINGTON STANDARDS - ARMS

MODEL 700 Custom	C Grade
	Same as BDL Grade Specifications Except as indicated below:
ACCURACY	Specially Selected at gallery
ASSEMBLY – Action	Smooth Working
All Parts (Selection)	Custom Assemble
All Screws	Not Qualified
BARREL	Std. 700
Length (1)	20", 22", 24" Depending on Caliber
Sight Holes (2)	Customer Option
CALIBERS (3)	All Calibers in BDL Grade except 17 Rem., 223 Rem., 375 H&H Mag. and 458 Win. Mag.
FINISH (Exterior)	Black except as shown below:
Barrel	Special Polish
Receiver	" "
Trigger Guard	" "
Floor Plate	" "
Trigger Guard Screw	Standard
Recoil Pad Screw	"
Safety	"
Firing Pin Head	Satin Chrome
Bolt Body	Damascene
Bolt Head	Special Polish
Bolt Handle	" "
Bolt Plug	" "

(1) Added 20"
(2) Added
(3) Added 223 Rem., 375 H&H Mag.

RD-6489

BARBER - PRESALE R 0129618
BARBER - PRESALE R 0129618
R2530606

CONFIDENTIAL-SUBJECT TO PROTECTIVE ORDER
KINZER V. REMINGTON

BARBER - PRESALE R 0129619

5/23/77
3-14-78
REVISED

REMINGTON STANDARDS - ARMS

BARBER - PRESALE R 0129619

MODEL	700 Custom	C Grade
MARKINGS (C-15360)		
Barrel		Std. 700
Proof. Etc.		Visible
Receiver		Std. 700
OPEN SIGHTS		See Packing
PACKING		Cloth Case
Outer Carton		Standard
		Sights packed in cloth bag
STOCK		
Bedding		Hand
Finish		RK–W or Satin Finish
Grain		Fancy
Checker		Cut
(2) Pattern (See Photos)		Full or Skipline
Pitch		20
Grip Cap		Rosewood (India)
(3) White Spacer		Optional
Recoil Pad	Use Pachmayr	– Presentation type
Brown Spacer		
Reinforcing Screw		Rosewood Plug (2)
Fore–End Tip		Rosewood (India)
(3) White Spacer		Optional
(1) Fore–End Length (from Bbl. Bracket)		11" or 10" (Dep. on Bbl. Length)
Studs		Yes
Left Hand Cheekpiece		Optional (Added cost)
SLING STRAP		No
TEST		Rigid

(1) Error on previous transmittal. was 1" or 10"
(2) Was BDL
(3) Was Standard

RD-6489

R2530607

CONFIDENTIAL-SUBJECT TO PROTECTIVE ORDER
KINZER V. REMINGTON

BARBER - PRESALE R 0129620

MODEL 700 Sniper

BDL
Grade

7.62 NATO - MILITARY SNIPER RIFLE STANDARDS

ACCURACY:

Range:	100 yards - Accuracy; 300 yards - Point of Impact
Point of Aim:	Center on Target
Center of Impact:	Not more than 2 inches below, or 2 inches above, and 2 inches either side point of aim.
Group Size: - 100 yds.	(E.S. - Extreme Spread) 5 shot 2" Center to Center - Remington Accuracy Device 5 shot 1-1/2" center to Center - Bench Rest Retest Option
Ammunition:	168 Grain International Match handloads or equivalent (Lake City Match)

ACTION:

Bolt action, hand operated repeater. Solid frame with takedown stock. Fixed Magazine.
Bolt cocks as bolt handle lifts. Rifle cocks as bolt handle is lowered to lock action closed.
Extracts and ejects as bolt is "opened". Direct action trigger.
2-stop Safety: FIRE position on forward - SAFE position rearward.

Action must feed, fire, extract and eject (include extraction and ejection without firing), satisfactorily with all varieties of ammunition listed as standard length for listed calibers in Technical Committee Manual of the Sporting Arms and Ammunition Manufacturers' Institute (SAAMI).

ANNOUNCEMENT:

BARBER - PRESALE R 0129620
R2530608

CONFIDENTIAL-SUBJECT TO PROTECTIVE ORDER
KINZER V. REMINGTON

MODEL 700 Sniper	BDL Grade
BARREL	Round tapered to breech and crowned. Parkerized. (BDL Grade). Remington specification alloy steel.
Chamber	Basic - 7.62 NATO
Length	24 inches
Diameter (O.D.)	Varmint Weight (with tapers) (40XB Standard + .060" inch)
Bore	.300 Min. - .301 Max.
Groove (6)	.308 Min. - .3085 Max.
Twist	1 in 10 inches - R.H.
Markings	See MARKINGS - Barrel
BARREL ASSEMBLY	
Sights	Redfield 3-9X Accurange (Furnished by Marine Corps)
Mounting Holes	In Receiver only.
BOLT	
Handle	Swept back with oval shaped ball with checker on top and bottom face.
Color	Bolt Plug, Handle - Black Body - Black Firing Pin Head - Bright
Markings	Serial Number on bottom of bolt.
BOLT RELEASE	Located at front of Trigger. Black color.

RD-6480

BARBER - PRESALE R 0129621
R2530609
BARBER - PRESALE R 0129621

CONFIDENTIAL-SUBJECT TO PROTECTIVE ORDER
KINZER V. REMINGTON

BARBER - PRESALE R 0129622

Date 2-18-66 6-21-67
REVISED 6-15-66

REMINGTON STANDARDS - ARMS

Caliber: 7.62 NATO

MODEL 700 Sniper		BDL Grade
BUTT PLATE	Screw (2) fitted to stock. All black color, corrugated metal.	
EJECTOR	Plunger type, spring loaded and pin assembled in bolt head.	
EXTRACTOR	Circular, clip type assembled inside bolt rim with rivet.	
FIRING PIN	[redacted]	
Protrusion	.045" Min. .075" Max.	
Indent	.018" Min. .026" Max. (using copper crusher)	
FLOOR PLATE		[redacted] with finger latch.
Color		Black
Material		Aluminum
Latch (corrugated - in trigger guard)		Black
FORE-END (Cap)		None
GRIP CAP		None
GUN:		
Capacity (Ctgs.)		6 (5 in Magazine).
Length (overall)		44 1/2"
MAGAZINE	"Fixed" box type. Stagger column loading. Clip slot in top of receiver.	
Floor Plate (Hinged - with Latch)		Yes
Loads		Top [redacted] shot clip.
Capacity		5 ctgs.
Follower (color)		[redacted].

RD-6489

BARBER - PRESALE R 0129622
R2530610

CONFIDENTIAL-SUBJECT TO PROTECTIVE ORDER
KINZER V. REMINGTON

BARBER - PRESALE R 0129623

Date 2-18-66
REVISED 6-15-66

REMINGTON STANDARDS - ARMS

Caliber: 7.62 NATO

MODEL 700 Sniper

BDL
Grade

MARKINGS - Barrel (Dwg. No. C-15360)	
Assembly	Left rear
Code (Mfg. Date)	Left rear
Inspection	Left rear
Proof (REP)	Right rear
Target	Right rear
Test (function)	Right rear
Test (Magna-flux)	Right rear
MARKINGS - Receiver (Dwg. No. C-15360)	
Grade	None
Model Script	None
Model Number	Below Remington Script
Remington Script	Left Side
Serial No.	Left Side, front
U.S.	Centered above serial no.
MARKINGS - Bolt (Prick-punch mark)	Ref: Current Practice
Magnaflux	Right Lug (Center) Serial No. Under Side (rear).
Bolt Head Braze	Left Lug (Center)
Bolt Handle Braze	Rear Handle (Center)
Proof	Bottom Handle (Center)
METAL FINISH:	Parkerized on all exposed metal parts except as otherwise tabulated.

BARBER - PRESALE R 0129623
R2530611

BARBER - PRESALE R 0129624

Date 2-18-66
REVISED 6-15-66

REMINGTON STANDARDS - ARMS

Caliber: 7.62 NATO
SHEET 5 Of 8

MODEL 700 Sniper

BDL
Grade

PACKING - Level "C":	Full length in Protecto case with outer single wall carton. Exposed metal parts coated with rust preventive.
PROOF TEST (REP)	Fire one (1) standard proof cartridge in each rifle. For location of marking (REP), see MARKINGS - Barrel.

CONFIDENTIAL-SUBJECT TO PROTECTIVE ORDER
KINZER V. REMINGTON
BARBER - PRESALE R 0129624
R2530612

CONFIDENTIAL-SUBJECT TO PROTECTIVE ORDER
KINZER V. REMINGTON

BARBER - PRESALE R 0129625

MODEL 700 Sniper				BDL Grade				
RECEIVER	Cylindrical, alloy steel.							
Finish				Parkerized				
Sighting	(6 holes)	Drilled and tapped for popular scope mount and receiver sight.						
Gas Escape	(1) Right hand side.							
Length (type)				Short				
Clip Slots				Yes				
Markings	See MARKINGS - Receiver							
RECOIL PAD				None				
SAFETY	2 stop position, thumb operated - forward and back.				Corrugated, black surface.			
Location	Right rear of receiver.							
"FIRE" position	Forward stop position							
"SAFE" position	Rearward stop position (bolt lock position also)							
SERIAL NUMBER				Yes				
Location	See MARKINGS - Receiver See BOLT - Markings							
SLING STRAP Type X-1/4"				Govt. Furnished				
SLING SWIVEL	See STOCK							

BARBER - PRESALE R 0129625
R2530613

CONFIDENTIAL-SUBJECT TO PROTECTIVE ORDER
KINZER V. REMINGTON

BARBER - PRESALE R 0129626

Date 2-18-66
REVISED 6-15-66

REMINGTON STANDARDS - ARMS

Caliber: 7.62 NATO
SHEET 7 of 8

MODEL 700 Sniper

BDL
Grade

SIGHTS				Redfield 3-9X Accurange furnished by gov't.
STOCK (Assembly)	American Walnut. Monte Carlo with cheek piece. Pistol Grip with comb cuts.			
Finish				Oil
Dimensions (Nominal)				See Below
Drop at Heel (from C/L of barrel)				1 5/16"
Drop at Comb & Monte Carlo (from C/L of barrel)				11/16"
Length of Pull				13 3/8"
Length of Grip				3 3/8"
Pitch (from C/L of barrel)				2 7/8"
Butt Plate				Yes
Swivels (2) 1-1/4"	Non-detachable			Yes
LENGTH (Overall) Stock (Approx.)				30-5/8"

BARBER - PRESALE R 0129626
R2530614

CONFIDENTIAL-SUBJECT TO PROTECTIVE ORDER
KINZER V. REMINGTON

BARBER - PRESALE R 0129627

Date 2-18-66
REVISED 6-15-66

REMINGTON STANDARDS - ARMS

Caliber: 7.62 NATO
SHEET 8 of 8

MODEL 700 Sniper

	BDL Grade
TRIGGER	Direct action, black metal. Wide serrated finger piece, full radius.
Pull (wt.)	3 lbs. Min. - 3 1/2 lbs. Max. (with wgt. sealed at factory).
Engagement	(Adjustment sealed at factory).
TRIGGER GUARD	Aluminum alloy, black color.
Type	Short (with floor plate)
WEIGHT	9 lbs.

BARBER - PRESALE R 0129627
R2530615

M/700 Mil. Sniper

M/700 D & F Gr.

CONFIDENTIAL-SUBJECT TO PROTECTIVE ORDER
KINZER V. REMINGTON

5-24-77
REVISED 11-11-70

REMINGTON STANDARDS - ARMS

MODEL 700	D Grade	F Grade
	Same as Standard Grade Specifications Except as indicated below:	
ASSEMBLY – Action	Smooth Working	Special Polish
All Parts (Selection)	Custom Assemble	Custom Assemble
All Screws	Qualify	Qualify
BARREL	Select (No Stainless Steel)	Select (No Stainless Steel)
Length	20", 22", 24"	20", 22", 24"
ENGRAVE		
Barrel	Simple Scroll	App. "F" Scroll
Receiver	Simple Scroll	App. "F" Scroll
Trigger Guard	Simple Scroll	Bear or Deer Head
Trigger Guard Screw	Simple Scroll (head on screw)	Simple scroll
Floor Plate (BDL)	Simple Scroll	Simple Scroll
Bolt Handle – Plug	Simple Scroll	Simple Scroll
Bolt Body	Damascene	Damascene
FINISH (Exterior)	Black except as shown below:	
Barrel	Special Polish	Special Polish
Receiver	Special Polish	Special Polish
Trigger Guard	Special Polish	Special Polish
Floor Plate	Special Polish	Special Polish
Trigger Guard Screw	Special Polish	Special Polish
Butt Plate Screw	Special Polish	Special Polish
Safety	Special Polish	Special Polish
Firing Pin Head	Satin Chrome	Satin Chrome
Bolt Body	Damascene	Damascene
Bolt Head	Special Polish	Special Polish
Bolt Handle	Special Polish	Special Polish
Bolt Plug	Special Polish	Special Polish

CONFIDENTIAL-SUBJECT TO PROTECTIVE ORDER
KINZER V. REMINGTON

BARBER - PRESALE R 0129631

REVISED 5-24-77 11-11-70

REMINGTON STANDARDS - ARMS

MODEL 700	D Grade	F Grade
MARKINGS (C–15360)		
Barrel	Cal. Stamp only	Cal. Stamp only
Proof, Etc.	Not visible	Not visible
Receiver	Standard 700	Standard 700
OPEN SIGHTS	Optional	Optional
PARKING	Cloth Case	Protector-Caddy
Outer Carton	Standard	Special
STOCK (Floor Plate)	Blind Mag. Opt.	Blind Mag. Opt
Bedding	Hand	Hand
Finish (Rubbed)	RK–W	RK–W
Oil – Optional	No Charge	No Charge
Grain	Fancy No. 4	Full Fancy No 6.
Checker	Hand	Hand
Pattern (See Photos)	"D"	"F"
Pitch	22	22
Grip Cap	Rosewood (India)	Rosewood (India)
White Spacer	Yes (Opt.w/6)	Yes (Opt. w/6
Butt Plate (Plastic)	Black	Black
White Spacer	Yes (Opt.w/6)	Yes (Opt. w/6)
Nameplate	None	Gold
Recoil Pad	Use Pachmayr – Presentation type for Magnum orders	
Reinforcing Bolt	Rosewood Plug (2)	Rosewood Plug (2)
Fore–End Tip	Rosewood (India) (Opt.w/6)	Rosewood (India) (Opt w/6)
White Spacer	Yes (Opt. w/0)	Yes (Opt. w/0)
Fore-End Length (From bbl. Bracket)	11" or 10" (Dep. on bbl. length	11" or 10" (Dep. on bbl. length)
Swivels (7/8") Q.D.	Yes	Yes
Left Hand Cheekpiece	Optional	Optional
SLING STRAP	No	No
TEST	Rigid	Rigid

BARBER - PRESALE R 0129631
R2530619

CONFIDENTIAL-SUBJECT TO PROTECTIVE ORDER
KINZER V. REMINGTON

BARBER - PRESALE R 0129632

Date 2-18-66
REVISED 6-21-67

REMINGTON STANDARDS - ARMS

Caliber: 7.62 NATO

MODEL 700 Sniper

BDL
Grade

7.62 NATO - MILITARY SNIPER RIFLE STANDARDS

ACCURACY:	
Range:	100 yards - Accuracy; 300 yards - Point of Impact
Point of Aim;	Center on Target
Center of Impact:	Not more than 2 inches below, or 2 inches above, and 2 inches either side point of aim.
Group Size:- 100 yds.	(E.S. - Extreme Spread) 5 shot 2" Center to Center - Remington Accuracy Device 5 shot 1-1/2" center to Center - Bench Rest Retest Option
Ammunition:	168 Grain International Match handloads or equivalent (Lake City Match)
ACTION:	Bolt action, hand operated repeater. Solid frame with takedown stock. Fixed Magazine. Bolt cocks as bolt handle lifts. Rifle cocks as bolt handle is lowered to lock action closed. Extracts and ejects as bolt is "opened". Direct action trigger. 2-stop Safety: FIRE position on forward - SAFE position rearward.
	Action must feed, fire, extract and eject (include extraction and ejection without firing), satisfactorily with all varieties of ammunition listed as standard length for listed calibers in Technical Committee Manual of the Sporting Arms and Ammunition Manufacturers' Institute (SAAMI).
ANNOUNCEMENT:	

RD-6489

BARBER - PRESALE R 0129632
R2530620

CONFIDENTIAL-SUBJECT TO PROTECTIVE ORDER
KINZER V. REMINGTON

BARBER - PRESALE R 0129633

Date 2-18-66
REVISED 6-15-66

REMINGTON STANDARDS - ARMS

Caliber: 7.62 NATO

MODEL 700 Sniper	BDL Grade
BARREL	Round tapered to breech and crowned. Parkerized. (BDL Grade). Remington specification alloy steel.
Chamber	Basic - 7.62 NATO
Length	24 inches
Diameter (O.D.)	Varmint Weight (with tapers) (40XB Standard + .060" inch)
Bore	.300 Min. - .301 Max.
Groove (6)	.308 Min. - .3085 Max.
Twist	1 in 10 inches - R.H.
Markings	See MARKINGS - Barrel
BARREL ASSEMBLY	
Sights	Redfield 3-9X Accurange (Furnished by Marine Corps)
Mounting Holes	In Receiver only.
BOLT	
Handle	Swept back with oval shaped ball with checker on top and bottom face.
Color	Bolt Plug, Handle - Black Body - Black Firing Pin Head - Bright
Markings	Serial Number on bottom of bolt.
BOLT RELEASE	Located at front of Trigger. Black color.

RD-6489

BARBER - PRESALE R 0129633
R2530621

CONFIDENTIAL-SUBJECT TO PROTECTIVE ORDER
KINZER V. REMINGTON

BARBER - PRESALE R 0129634

Date 2-18-66 6-21-67
REVISED 6-15-66

REMINGTON STANDARDS - ARMS

Caliber: 7.62 NATO
SHEET 3 of 8

MODEL 700 Sniper		BDL Grade
BUTT PLATE	Screw (2) fitted to stock. All black color, corrugated metal.	
EJECTOR	Plunger type, spring loaded and pin assembled in bolt head.	
EXTRACTOR	Circular, clip type assembled inside bolt rim with rivet.	
FIRING PIN	Cocks on opening of bolt.	
Protrusion	.045" Min. - .075" Max.	
Indent	.018" Min. - .026" Max. (using copper crusher)	
FLOOR PLATE		Hinged with finger latch.
Color		Black
Material		Aluminum
Latch (corrugated - in trigger guard)		Black
FORE-END (Cap)		None
GRIP CAP		None
GUN:		
Capacity (Ctgs.)		6 (5 in Magazine).
Length (overall)		44 1/2"
MAGAZINE	"Fixed" box type. Stagger column loading. Clip slot in top of receiver.	
Floor Plate (Hinged - with Latch)		Yes
Loads		Top & with 5 shot clip.
Capacity		5 ctgs.
Follower (color)		Bright Nickel.

RD-6489

BARBER - PRESALE R 0129634
R2530622

CONFIDENTIAL-SUBJECT TO PROTECTIVE ORDER
KINZER V. REMINGTON

BARBER - PRESALE R 0129635

Date 2-18-66
REVISED 6-15-66

REMINGTON STANDARDS - ARMS

Caliber: 7.62 NATO

MODEL 700 Sniper	BDL Grade						
MARKINGS - Barrel (Dwg. No. C-15360)							
Assembly	Left rear						
Code (Mfg. Date)	Left rear						
Inspection	Left rear						
Proof (REP)	Right rear						
Target	Right rear						
Test (function)	Right rear						
Test (Magna-flux)	Right rear						
MARKINGS - Receiver (Dwg. No. C-15360)							
Grade	None						
Model Script	None						
Model Number	Below Remington Script						
Remington Script	Left Side						
Serial No.	Left Side, front						
U.S.	Centered above serial no.						
MARKINGS - Bolt (Prick-punch mark)	Ref: Current Practice						
Magnaflux	Right Lug (Center)	Serial No. Under Side (rear).					
Bolt Head Braze	Left Lug (Center)						
Bolt Handle Braze	Rear Handle (Center)						
Proof	Bottom Handle (Center)						
METAL FINISH:	Parkerized on all exposed metal parts except as otherwise tabulated.						

RD-6489

BARBER - PRESALE R 0129635
R2530623

CONFIDENTIAL-SUBJECT TO PROTECTIVE ORDER
KINZER V. REMINGTON

BARBER - PRESALE R 0129636

Date 2-18-66
REVISED 6-15-66

REMINGTON STANDARDS - ARMS

Caliber: 7.62 NATO

MODEL 700 Sniper

BDL
Grade

PACKING - Level "C":	Full length in Protecto case with outer single wall carton. Exposed metal pafts coated with rust preventive.
PROOF TEST (REP)	Fire one (1) standard proof cartridge in each rifle. For location of marking (REP), see MARKINGS - Barrel.

RD-6489

BARBER - PRESALE R 0129636
R2530624

CONFIDENTIAL-SUBJECT TO PROTECTIVE ORDER
KINZER V. REMINGTON

BARBER - PRESALE R 0129637

Date, 2-18-66
REVISED

REMINGTON STANDARDS - ARMS

Caliber: 7.62 NATO

MODEL 700 Sniper				BDL Grade				
RECEIVER	Cylindrical, alloy steel.							
Finish				Parkerized				
Sighting	(6 holes)	Drilled and tapped for popular scope mount and receiver sight.						
Gas Escape	(1) Right hand side.							
Length (type)				Short				
Clip Slots				Yes				
Markings	See MARKINGS - Receiver							
RECOIL PAD				None				
SAFETY	2 stop position, thumb operated - forward and back.				Corrugated, black surface.			
Location	Right rear of receiver.							
"FIRE" position	Forward stop position							
"SAFE" position	Rearward stop position (bolt lock position also)							
SERIAL NUMBER				Yes				
Location	See MARKINGS - Receiver See BOLT - Markings							
SLING STRAP Type 1/-1/4"				Govt. Furnished				
SLING SWIVEL	See STOCK							

RD-6489

BARBER - PRESALE R 0129637
R2530625

BARBER - PRESALE R 0129638

Date 2-18-66
REVISED 6-15-66

REMINGTON STANDARDS - ARMS

Caliber: 7.62 NATO

MODEL 700 Sniper

BDL
Grade

SIGHTS	Redfield 3-9X Accurange furnished by gov't.
STOCK (Assembly)	American Walnut. Monte Carlo with cheek piece. Pistol Grip with comb cuts.
Finish	Oil
Dimensions (Nominal)	See Below
Drop at Heel (from C/L of barrel)	1 5/16"
Drop at Comb & Monte Carlo (from C/L of barrel)	11/16"
Length of Pull	13 3/8"
Length of Grip	3 3/8"
Pitch (from C/L of barrel)	2 7/8"
Butt Plate	Yes
Swivels (2) 1-1/4" Non-detachable	Yes
LENGTH (Overall) Stock (Approx.)	30-5/8"

RD-6489

CONFIDENTIAL-SUBJECT TO PROTECTIVE ORDER
KINZER V. REMINGTON

BARBER - PRESALE R 0129638
R2530626

CONFIDENTIAL-SUBJECT TO PROTECTIVE ORDER
KINZER V. REMINGTON

BARBER - PRESALE R 0129639

Date 2-18-66
REVISED 6-15-66

REMINGTON STANDARDS - ARMS

Caliber: 7.62 NATO

MODEL 700 Sniper				BDL Grade				
TRIGGER	Direct action, black metal. Wide serrated finger piece, full radius.							
Pull (wt.)	3 lbs. Min. - 3 1/2 lbs. Max. (with wgt. sealed at factory).							
Engagement	(Adjustment sealed at factory).							
TRIGGER GUARD	Aluminum alloy, black color.							
Type				Short (with floor plate)				
WEIGHT				9 lbs.				

RD-6489

BARBER - PRESALE R 0129639
R2530627

MODEL 700C

CONFIDENTIAL-SUBJECT TO PROTECTIVE ORDER
KINZER V. REMINGTON

MODEL 700 Classic

Same as BDL Grade Except:	
(1) BARREL	No Sight Holes
CALIBERS	22-250
	6mm
	243
	30-06
	270
	7mm Rem. Mag.
(3)	7mm Mauser (7 x 57)
RECOIL PAD	
(Std. Calibers)	Presentation Type – Brown with black backer.
(7mm Rem. Mag.)	Same as used on Std. 700 except Brown with black backer.
STOCK (Assembly)	
Butt Plate	No
Cheekpiece	No
Checkering	Machine cut –20 lines / in.
Fore-end Tip	No
Finish	Vinyl
Grip Cap	No
Recoil Pad	Yes (See Recoil Pad)
Swivel Studs	No
(2) Drop at Comb	1 - 5/8"
(2) Drop at Heel	2"

(1) Added Barrel
(2) Added Drops
(3) Added

RD-6469

BARBER - PRESALE R 0129641
BARBER - PRESALE R 0129641
R2530629

CONFIDENTIAL-SUBJECT TO PROTECTIVE ORDER
KINZER V. REMINGTON

BARBER - PRESALE R 0129642

MODEL 700 Classic

	Same as BDL Grade Except:	
(1)	BARREL	No Sight Holes
	CALIBERS	22-250
		6mm
		243
		30-06
		270
		7mm Rem. Mag.
	RECOIL PAD	
	(Std. Calibers)	Presentation Type – Brown with black backer.
	(7mm Rem. Mag.)	Same as used on Std. 700 except Brown with black backer.
	STOCK (Assembly)	
	Butt Plate	No
	Cheekpiece	No
	Checkering	Machine cut – 20 lines / in.
	Fore-end Tip	No
	Finish	Vinyl
	Grip Cap	No
	Recoil Pad	Yes (See Recoil Pad)
	Swivel Studs	No
(2)	Drop at Comb	1 - 5/8"
(2)	Drop at Heel	2"

(1) Added Barrel
(2) Added Drops

RD-6469

BARBER - PRESALE R 0129642
R2530630

CONFIDENTIAL-SUBJECT TO PROTECTIVE ORDER
KINZER V. REMINGTON

BARBER - PRESALE R 0129643

MODEL 700 Custom C Grade

	Same as BDL Grade Specifications Except as indicated below:	
ACCURACY		Specially Selected at gallery
ASSEMBLY – Action		Smooth Working
All Parts (Selection)		Custom Assemble
All Screws		Not Qualified
BARREL		Std. 700
Length		22", 24" Depending on Caliber
CALIBERS	All Calibers in BDL Grade except 17 Rem. and 264 Win.	
FINISH (Exterior)	Black except as shown below:	
Barrel		Special Polish
Receiver		" "
Trigger Guard		" "
Floor Plate		" "
Trigger Guard Screw		Standard
Recoil Pad Screw		"
Safety		"
Firing Pin Head		Satin Chrome
Bolt Body		Damascene
Bolt Head		Special Polish
Bolt Handle		" "
Bolt Plug		" "

BARBER - PRESALE R 0129643
R2530631

CONFIDENTIAL-SUBJECT TO PROTECTIVE ORDER
KINZER V. REMINGTON

BARBER - PRESALE R 0129644

5/23/77
3/23/77
REVISED

REMINGTON STANDARDS - ARMS

MODEL 700 Custom C Grade

MARKINGS (C-15360)		
Barrel		Std. 700
Proof. Etc.		Visible
Receiver		Std. 700
OPEN SIGHTS		See Packing
PACKING		Cloth Case
Outer Carton		Standard
		Sights packed in cloth bag
STOCK		
Bedding		Hand
Finish		RK–W or Satin Finish
Grain		Fancy
Checker		Cut
Pattern (See Photos)		BDL
Pitch		20
Grip Cap		Rosewood (India)
White Spacer		Yes
Recoil Pad	Use Pachmayr – Presentation type	
Brown Spacer		
Reinforcing Screw		Rosewood Plug (2)
Fore–End Tip		Rosewood (India)
White Spacer		Yes
(1) Fore–End Length (from Bbl. Bracket)		11" or 10" (Dep. on Bbl. Length)
Studs		Yes
Left Hand Cheekpiece		Optional (Added cost)
SLING STRAP		No
TEST		Rigid

(1) Error on previous transmittal. was 1" or 10"

RD-6489

BARBER - PRESALE R 0129644
R2530632

CONFIDENTIAL-SUBJECT TO PROTECTIVE ORDER
KINZER V. REMINGTON

BARBER - PRESALE R 0129645

5-24-77
REVISED 11-11-70

REMINGTON STANDARDS - ARMS

MODEL 700	D Grade	F Grade
	Same as Standard Grade Specifications Except as indicated below:	
ASSEMBLY – Action	Smooth Working	Special Polish
All Parts (Selection)	Custom Assemble	Custom Assemble
All Screws	Qualify	Qualify
BARREL	Select (No Stainless Steel)	Select (No Stainless Steel)
Length	20", 22", 24"	20", 22", 24"
ENGRAVE		
Barrel	Simple Scroll	App. "F" Scroll
Receiver	Simple Scroll	App. "F" Scroll
Trigger Guard	Simple Scroll	Bear or Deer Head
Trigger Guard Screw	Simple Scroll (head on screw)	Simple scroll
Floor Plate (BDL)	Simple Scroll	Simple Scroll
Bolt Handle – Plug	Simple Scroll	Simple Scroll
Bolt Body	Damascene	Damascene
FINISH (Exterior)	Black except as shown below:	
Barrel	Special Polish	Special Polish
Receiver	Special Polish	Special Polish
Trigger Guard	Special Polish	Special Polish
Floor Plate	Special Polish	Special Polish
Trigger Guard Screw	Special Polish	Special Polish
Butt Plate Screw	Special Polish	Special Polish
Safety	Special Polish	Special Polish
Firing Pin Head	Satin Chrome	Satin Chrome
Bolt Body	Damascene	Damascene
Bolt Head	Special Polish	Special Polish
Bolt Handle	Special Polish	Special Polish
Bolt Plug	Special Polish	Special Polish

RD-6469

BARBER - PRESALE R 0129645
R2530633

CONFIDENTIAL-SUBJECT TO PROTECTIVE ORDER
KINZER V. REMINGTON

BARBER - PRESALE R 0129646

REVISED 5-24-77
11-11-70

REMINGTON STANDARDS - ARMS

BARBER - PRESALE R 0129646

MODEL 700	D Grade	F Grade
MARKINGS (C–15360)		
Barrel	Cal. Stamp only	Cal. Stamp only
Proof, Etc.	Not visible	Not visible
Receiver	Standard 700	Standard 700
OPEN SIGHTS	Optional	Optional
PARKING	Cloth Case	Protector-Caddy
Outer Carton	Standard	Special
STOCK (Floor Plate)	Blind Mag. Opt.	Blind Mag. Opt
Bedding	Hand	Hand
Finish (Rubbed)	RK–W	RK–W
Oil – Optional	No Charge	No Charge
Grain	Fancy No. 4	Full Fancy No. 6.
Checker	Hand	Hand
Pattern (See Photos)	"D"	"F"
Pitch	22	22
Grip Cap	Rosewood (India)	Rosewood (India)
White Spacer	Yes (Opt.w/6)	Yes (Opt. w/6
Butt Plate (Plastic)	Black	Black
White Spacer	Yes (Opt.w/6	Yes (Opt. w/6)
Nameplate	None	Gold
Recoil Pad	Use Pachmayr – Presentation type for Magnum orders	
Reinforcing Bolt	Rosewood Plug (2)	Rosewood Plug (2)
Fore–End Tip	Rosewood (India) (Opt.w/6)	Rosewood (India) (Opt. w/6)
White Spacer	Yes (Opt. w/0)	Yes (Opt. w/0)
Fore-End Length (From bbl. Bracket)	11" or 10" (Dep. on bbl. length	11" or 10" (Dep. on bbl. length)
Swivels (7/8") Q.D.	Yes	Yes
~~Left~~ Hand Cheekpiece	Optional	Optional
SLING STRAP	No	No
TEST	Rigid	Rigid

RD-6489

R2530634

MODEL 700
1974 VERSION

CONFIDENTIAL-SUBJECT TO PROTECTIVE ORDER
KINZER V. REMINGTON

BARBER - PRESALE R 0129648

Rev. 5-11-81

ACCURACY INDEX

REVISED 5-20-81

REMINGTON STANDARDS - ARMS

MODEL 700 1974 Version	5-Shot Group Size	Test Ammo.
BOLT ACTION REPEATER	(C to C)	(Gr.)
CALIBERS (Center Fire)		
222 Rem.	2.2"	50 HPPL
22-250 Rem.	2.2"	55 HDPL
17 Rem.	2.2"	25 HPPL
6mm Rem.	2.2"	80 HPPL
243 Win.	2.2"	100 SP
308 Win.	3.5"	180 PSP
30-06	3.5"	220 SP
270 Win.	3.5"	150 SP
25-06 Rem.	2.2"	87 HPPL
7mm Rem. Mag.	2.7"	175 PSP
264 Win. Mag.	2.2"	140 SP
300 Win. Mag.	3.5"	180 SP
375 H.H. Mag.	3.5"	270 SP
458 Win. Mag.	3.5"	510 SP
8mm Rem. Mag.	3.5"	220 PSP
7mm Mauser (7 x 57)	2.7"	175 SP
7mm-08 Rem.	2.7"	140 PSP
7mm Exp. Rem.	3.5"	165 SP
CALIBERS (Varmint)*		
7mm-08 Rem.	1.5"	140 PSP
222 Rem.	1.5"	50 PL
223 Rem.	1.5"	50 PL
22-250 Rem.	1.5"	55 PL
6mm Rem.	1.5"	80 PL
243 Win.	1.5"	80 PL
25-06	1.5"	87 PL
308 Win.	1.5"	168
7.62 NATO	2.0	168

*Current production lists 1.5" (inside to inside) for all Varmint calibers.

RD-6489

BARBER - PRESALE R 0129648
R2530636

REVISED 3-12-73 / 9-13-76

REMINGTON STANDARDS - ARMS

MODEL 700 1974 Version	5-Shot Group Size	Test Ammo.
BOLT ACTION REPEATOR	(C to C)	(Gr.)
CALIBERS (Center Fire)		
222 Rem.	2.2"	50 HPPL
22-250 Rem.	2.2"	55 HDPL
17 Rem.	2.2"	25 HPPL
6mm Rem.	2.2"	80 HPPL
243 Win.	2.2"	100 SP
308 Win.	3.5"	180 PSP
30-06	3.5"	220 SP
270 Win.	3.5"	150 SP
25-06 Rem.	2.2"	87 HPPL
7mm Rem. Mag.	2.7"	175 PSP
264 Win. Mag.	2.2"	140 SP
300 Win. Mag.	3.5"	180 SP
375 H. H. Mag.	3.5"	270 SP
458 Win. Mag.	3.5"	510 SP
(1) 8mm Rem. Mag.	3.5"	220 PSP
CALIBERS (Varmint)*		
222 Rem.	1.5	50 PL
223 Rem.	1.5	50 PL
22-250 Rem.	1.5	55 PL
6mm Rem.	1.5	80 PL
243 Win.	1.5	80 PL
25-06	1.5	87 PL
308 Win.	1.5	168
CALIBER (SNIPER)		
7.62 NATO	2.0	168

* Current production lists 1.5" (inside to inside) for all Varmint calibers.

(1) Added

RD-6489

CONFIDENTIAL-SUBJECT TO PROTECTIVE ORDER
KINZER V. REMINGTON
BARBER - PRESALE R 0129649
R2530637
BARBER - PRESALE R 0129649

CONFIDENTIAL-SUBJECT TO PROTECTIVE ORDER
KINZER V. REMINGTON

REVISED 3-12-73 / 9-13-76 / 1/26/79

REMINGTON STANDARDS - ARMS

MODEL 700 1974 Version	TWIST R. H.	GROOVE No.	BORE (LAND) DIA.	BORE (LAND) WIDTH	GROOVE DIA.	GROOVE WIDTH		
BOLT ACTION REPEATER (Center Fire)								
*222 Rem.	14"	6	.219"	.035"	.224"	.080"		
*25-06 Rem.	10"	6	.250	.036	.2568"	.096"		
*22-250 Rem.	14"	6	.219"	.035"	.224"	.080"		
223 Rem. (Varmint only)	12"	6	.219"	.035"	.224"	.080"		
*6mm Rem.	9 1/8"	6	.237"	.032"	.243"	.090"		
*243 Win.	9 1/8"	6	.237	.032"	.243"	.090"		
270 Win.	10"	6	.270"	.036"	.277"	.105"		
30-06 Spgfd.	10"	6	.300"	.042"	.308"	.115"		
308 Win.	10"	6	.300"	.042"	.308"	.115"		
7mm Rem. Mag.	9 1/4"	6	.277"	.035"	.284"	.110"		
264 Win. Mag.	9"	6	.256"	.039"	.264"	.095"		
300 Win. Mag.	10"	6	.300"	.042"	.308"	.115"		
375 H. & H. Mag.	12"	6	.366"	.077"	.376"	.115"		
458 Win. Mag.	14"	6	.450"	.086"	.458"	.150"		
17 Rem.	9"	6	.168"	.026"	.172"	.063"		
(1) 8mm Rem. Mag.	10"	6	.316"		.324"	.125"		
308 Win. (Varmint)	12"	6	.300	.042"	.308"	.115"		
(3) (2) 7 mm Exp. Rem.	9 1/4"	6	.277"	.035"	.284"	.110"		

* Also Varmint Use.

(1) Added
(2) Added 7 mm Exp. Rem.
(3) Revised Rifling Specs.

RD-6489

BARBER - PRESALE R 0129650
BARBER - PRESALE R 0129650
R2530638

CONFIDENTIAL-SUBJECT TO PROTECTIVE ORDER
KINZER V. REMINGTON

BARBER - PRESALE R 0129651

MODEL 700 1974 Version		ADL Grade	BDL Grade
BOLT ACTION REPEATER			
ACCURACY	Use open sights, fore-end and elbow rest. Set rear sight eyepiece on fourth mark from rear on ramp and centered.		
Test Ammunition:	See Accuracy Index.		
Group Size:	See Accuracy Index.		
Center of Impact:	Not more than 5 inches below, or 2 inches above, or 6 inches either side of point of aim.		
Point of Aim:	6 o'clock on target.		
Range:	100 yds.		
ACTION	Bolt action, center fire, hand operated repeater. Solid frame with take-down stock. Fixed magazine. Bolt cocks as handle lifts. Rifle cocks as bolt handle is lowered to lock action closed. Extracts and ejects as bolt is "opened". Direct action trigger. 2 stop safety. FIRE position – forward SAFE position – rearward. Rear position on safety locks bolt closed.		
Short Action Calibers		222, 308 243, 6mm 22-250	222, 308 243, 6mm 22-250, 17 Rem.
(2) Long Action Calibers:		30-06, 25-06 270, 7mm 7mm Exp. Rem.	30-06, 25-06, 7 mm Exp. Rem. 270, 7mm 264, 300 Mag. 8mm Rem. Mag.
(1)	Action must feed, fire, extract and eject (include extraction and ejection without firing), satisfactorily with all varieties of ammunition listed as standard for listed calibers in Technical Committee Manual of the Sporting Arms and Ammunition Manufacturers' Institute (SAAMI)		

(1) Added 8mm Rem. Mag.
(2) Added 7 mm Exp. Rem.

RD-6489

BARBER - PRESALE R 0129651
R2530639

CONFIDENTIAL-SUBJECT TO PROTECTIVE ORDER
KINZER V. REMINGTON

BARBER - PRESALE R 0129652

MODEL 700 1974 Version			ADL Grade		BDL Grade			
ANNOUNCEMENT		(Discontinued)						
30-06	1962							
270 Win.	1962							
222 Rem.	1962							
7mm Rem. Mag.	1962							
264 Win. Mag.	1962							
300 Win. Mag.	1964							
308 Win.	1962							
243 Win.	1962							
25-06 Rem.	1970							
6mm Rem.	1963							
22-250 Rem.	1965							
17 Rem.	1971							
6.5 Rem. Mag.	1969	1972						
350 Rem. Mag.	1969	1972						
(1) 8mm Rem. Mag.	1977				*			
(2) 7 mm Exp. Rem.	1979							
BARREL	Round, tapered to breech, crowned, Black color, Medium lustre.							
Material:	Remington specified alloy steel. Stainless steel for 17 Rem. only.							
Bore – Groove:	See Rifling Index.							
Optional Barrel:			w/o Sights		w/o Sights.			
Markings:	See Marking – Barrel.							
BOLT ASSEMBLY:	3 piece brazed assembly – Bolt body, Bolt head, Bolt handle Includes Firing Pin Assembly.							
Bolt Plug:	Cover firing pin head. Black color							
Bolt Handle:	Swept back oval shape ball. Checker on upper and lower face of ball. Black color							
Bolt Body:	Bright Steel – damascene finish.							
Bolt Head	Black color.							
Feature	Anti-bind design							
Markings:	See Markings – Bolt							
Size:								
Short	222, 17 Rem							
Short Std.	243, 6mm, 308, 22-250							
(2) Standard	30-06, 270, 25-06 , 7 mm Exp. Rem.							
(1) Magnum	7mm, 264, 300 Mag. , 8mm Rem. Mag.							
(1) Added 8mm Rem. Mag.	(2) Added	7 mm Exp. Rem.						

RD-6489

BARBER - PRESALE R 0129652 R2530640

LIMITED DISTRIBUTION

BARBER - PRESALE R 0129653

MODEL 700 1974 Version		ADL Grade	BDL Grade
BOLT RELEASE	Located to front of trigger, Black color.		
BUTT PLATE	Screw (2) fitted. Black plastic, corrugated surface		
Caliber use:	30-06, 25-06, 222, 22-250, 270, 243, 308, 6mm, 17 Rem. (See recoil pad for magnum calibers).		
EJECTOR	Plunger Type, spring loaded, pin assembled to bolt head.		
EXTRACTOR	Circular, clip type, riveted inside bolt head.		
FIRING PIN	Spring retracted in bolt.		
Indent	.018" Min. – .026" Max. (Use copper crusher)		
Protrusion	.045" Min. – .075" Max.		
FLOOR PLATE	Black metal. Latch in trigger guard.		
Use		No	Yes
FORE–END (Cap)	Black plastic – bonded to stock.		
Use		No	Yes
Spacer		---	White Plastic
GRIP CAP	Black plastic – bonded to stock.		
Use		No.	Yes
Spacer		---	White plastic

CONFIDENTIAL-SUBJECT TO PROTECTIVE ORDER
KINZER V. REMINGTON
BARBER - PRESALE R 0129653
R2530641

CONFIDENTIAL-SUBJECT TO PROTECTIVE ORDER
KINZER V. REMINGTON

BARBER - PRESALE R 0129654

3-27-73

REVISED 9-13-76 - 1/26/79

MODEL 700 1974 Version			ADL Grade		BDL Grade
GUN LENGTH & WEIGHT:					See below
	Barrel	Receiver	Overall	Weight	Weight
243 Win.	22"	Short	41 5/8"	7 lbs.	Add 4 oz.
308 Win.	22"	"	"	"	Sling, etc.
6mm Rem.	22"	"	"	"	
(2) 7 mm Exp. Rem.	22"	Long	42 1/2"	"	
30-06	22"	Long	42 1/2"	7 lbs.	Sling, etc.
270 Win.	22"	"	"	"	
17 Rem.	24"	Short	43 5/8"	7 lbs. 4 oz.	Sling, etc.
222 Rem.	24"	"	"	"	
22-250	24"	"	"	"	
7mm Rem. Mag.	24"	Long	44 1/2"	7 lbs. 8 oz.	Sling , Etc.
25-06 Rem.	24"	"	"	"	
264 Win. Mag.	24"	"	"	"	
300 Win. Mag.	24"	"	"	"	
(1) 8mm Rem. Mag.	24"	"	"	"	Sling, Etc.
MAGAZINE	Fixed box. Stagger column loading.				
Capacity:	(Add one (1) for Gun Capacity)				
5 ctgs.	222, 17 Rem				
(2) 4"	22-250, 243, 308, 6mm, 270, 30-06, 25-06			7 mm Exp. Rem.	
3"	7mm, 264, 300 Mag.				
Floor Plate	(hinged with latch)		None		Yes
Follower:	* Polished Stainless Steel				
Loads: (or unloads)			Top only		Top & Bottom

* Finish corrected. Was bright nickel.

(1) Added
(2) Added 7 mm Exp. Rem.

RD-6489

BARBER - PRESALE R 0129654
R2530642

LIMITED DISTRIBUTION

MODEL 700 1974 Version		ADL Grade	BDL Grade
MARKINGS – Barrel (Dwg. C-15360)			
Assembly	Left Rear		
Caliber	Left Rear of Remington name.		
Code (Mfg. Date)	Left Rear		
Inspection	Left Rear		
Patent Numbers	Below Remington address.		
Remington Address	Left Side		
Target	Right Rear.		
Test	Right Rear		
Magnaflux	Right Rear		
Other	---		
MARKINGS – Bolt (Prick-punch mark)			
Bolt Handle Braze	Rear Handle (Center)		
Bolt Head Braze	Left Lug (Center)		
Magnaflux	Right Lug (Center)		
Proof	Bottom Handle (Center)		
Serial Number (1)	Underside (Rear)	Last four (4) numbers only.	
MARKINGS – Receiver (Dwg. C-15360)			
Grade	None		
Model Number	Below Remington Script		
Model Script	None		
Remington Script	Left Side		
Serial Number	Left Side, Front		
Other	Mark "S" and "F" on receiver below and above resp. SAFE and FIRE stop positions of safety.		

RD-6489

CONFIDENTIAL-SUBJECT TO PROTECTIVE ORDER
KINZER V. REMINGTON
BARBER - PRESALE R 0129655
BARBER - PRESALE R 0129655
R2530643

LIMITED DISTRIBUTION

BARBER - PRESALE R 0129656

MODEL 700 1974 Version	ADL Grade	BDL Grade
PACKING	Full length in single wall, inner rifle carton. Bolt removed and packed separately in same carton, Exposed metal parts coated with rust preventive.	
Inner Carton	One piece folding, corrugated fiberboard.	
Literature	Gun Owner's Guide – Form No. 5461 in carton. Misc. sale items if available.	
Markings	Printed label giving manufacturer, model name and/or number, caliber, serial number and packing code., sales number.	
Outer Carton	1, 2, 3 or 5 inner carton capacity. Corrugated carton of greater strength.	
Literature	Copy of regular Remington shipping ticket with, complete information.	
Markings	Name, address of Purchases with purchaser's order number.	
Shipping Weight		
1 gun	10 lbs.	
2 guns	19 lbs.	
3 guns	27 lbs.	
5 guns	46 lbs.	
Export	Packaging same as domestic but with "legal" or actual weight recorded on label.	
PATENT NO's.	2,473,373 – 2,514,981 – 2,585, 195	
PROOF TEST (REP)	Fire one (1 – standard proof cartridge in each rifle. For location of marking (REP), see MARKINGS – Barrel.	
RECEIVER	Cylindrical, alloy steel, black, medium luster.	
Action Lengths	See Gun Length and Weights	
Finish	Medium Luster.	
Gas Escape	(1) Right Hand Side	
Markings	See Markings – Receiver	
Sighting	(6 holes) Drilled and tapped for popular scope mount and receiver sight.	
Feature	Anti-bind design.	

CONFIDENTIAL-SUBJECT TO PROTECTIVE ORDER
KINZER V. REMINGTON
BARBER - PRESALE R 0129656
R2530644

CONFIDENTIAL-SUBJECT TO PROTECTIVE ORDER
KINZER V. REMINGTON

BARBER - PRESALE R 0129657

LIMITED DISTRIBUTION

MODEL 700 1974 Version		ADL Grade	BDL Grade
RECOIL PAD	Black Color		
Calibers:	All Magnum Grades only.		
(2) Markings:	"Remington" on back surface See Logo B2 for Size.		
Spacer	White plastic.		
SAFETY	2 stop position, thumb operated – forward and back. Corrugated, black surface.		
Location	Right rear of Receiver.		
"FIRE" position	Forward stop position. Marked "F" on receiver.		
"SAFE" Position	Rearward stop position (Bolt lock position also). Marked "S" on receiver.		
SERIAL NUMBER	(Start 6,200,000 Last No.	6,899,999 Ref: See Marking Dwg. C-15360)	
Location	See MARKINGS – Receiver		
	See BOLT – Markings		
	(Last four (4) numbers only).		
SLING STRAP			
Type – 7/8"	Leather, one piece – purchased. Accessory		St. Equipment
SLING SWIVEL 7/8"	See STOCK	Accessory	Standard
O. D.		(added cost)	Equipment
SIGHTS	Metal, black color. (Removable).		
Front	Brass face head (dovetail) with screw (2) fit ramp.		
Rear (1)	Open, U-Notch – adjustable for windage and elevation. Sliding ramp for elevation.		
STOCK (Assembly)	American walnut, reddish filler. Monte Carlo with cheek piece. Pistol grip with comb cuts and checkered (Custom). See action: Long action, short action caliber use.		
Finish		RK–W	RK–W
Butt Plate	See Butt Plate		
Spacer (White Plastic)			
Recoil Pad	(MAGNUM caliber use only)		
Checkering		D–90976	D–91001
Recoil Pad Spacer (White Plastic)			

(1) REF: Op. Comm. meeting min. No. 9, June 1972, approving release to production.
(2) See Memo J. H. Lewis to J. F. Finnegan dated 8-24-72

RD-6469

BARBER - PRESALE R 0129657
R2530645

LIMITED DISTRIBUTION

MODEL 700 1974 Version			ADL Grade		BDL Grade			
STOCK (Continued)								
Dimensions (Nominal – 30-06			See Below		See ADL Grade			
Drop at Heel (from ℄ of barrel)			1 5/16"		"			
Drop at Comb & Monte Carlo (From ℄ of bbl.)			11/16"		"			
Length of Pull			13 3/8"		"			
Length of Grip			3 3/8"		"			
Pitch (from ℄ of barrel)			2 7/8"		"			
Fore-end Cap (black plastic)			No		Yes			
Spacer (white plastic)			--		Yes			
Grip Cap (black plastic)			No		Yes			
Spacer (white plastic)			--		Yes			
Swivels (2) 7/8" O. D. (Quick Detachable)			No		Yes			
TRIGGER	Direct action, black metal, wide serrated finger piece, full radius.							
Pull (Wt.)	3 lbs. Min. – 5 lbs. Max. (with wt. sealed at factory).							
Engagement	Adjustment sealed at factory.							
TRIGGER GUARD	Aluminul alloy, black color. Anodized – High Lustre							
Type			Short		Long (with floor plate)			
WEIGHT	(See Gun Length & Weight)							

CONFIDENTIAL-SUBJECT TO PROTECTIVE ORDER
KINZER V. REMINGTON
BARBER - PRESALE R 0129658
R2530646
BARBER - PRESALE R 0129658

LIMITED DISTRIBUTION

MODEL 700 1974 Version All Grades – D & F Excepted

STOCK TOLERANCES (Visible)

Barrel Groove:	Max. Opening .015"
Butt Plate:	Plate margin – none (when assembled) Stock margin – .010" Max. No opening allowable.
Floor Plate:	Trigger guard margin – none Stock margin – .010" Max. No opening allowable.
Floor Plate:	Trigger Guard margin – none Stock margin – .010" Max. Opening – .015" Max.
Grip Cap:	Cap margin – none Stock margin – none No opening allowable
Receiver:	Rear margin – none Stock margin, rear – .010" Max. Opening – .015" Max.
Recoil Pad:	Pad margin – none (when assembled) Stock margin – .010" Max. No opening allowable.
Safety:	Opening .020" Max. (Between safety arm and wood)

REF: M. H. Walker

RD-6489

CONFIDENTIAL-SUBJECT TO PROTECTIVE ORDER
KINZER V. REMINGTON
BARBER - PRESALE R 0129659
BARBER - PRESALE R 0129659
R2530647

M/700 Custom

CONFIDENTIAL-SUBJECT TO PROTECTIVE ORDER
KINZER V. REMINGTON

BARBER - PRESALE R 0129661

REVISED 11-11-70
9-12-68

REMINGTON STANDARDS - ARMS

MODEL 700 Custom	C Grade	D Grade	F Grade	(1)
	Same as Standard Grade Specifications Except as indicated below:			
ASSEMBLY – Action	Smooth Working	Same as "C"	Special Polish	
All Parts (Selection)	Custom Assemble	" " "	Same as "C"	
All Screws	Not Qualified	Qualify	Qualify	
BARREL	Select (No Stainless Steel)	Same as "C"	Same as "C"	
Length	20",22",24"	" " "	" " "	
ENGRAVE				
Barrel	None	Simple Scroll	App. "F" Scroll	
Receiver	"	" "	" " "	
Trigger Guard	"	" "	Bear or Deer Head	
Trigger Guard Screw	"	Simple Scroll (head or screw)	Simple Scroll	
Floor Plate (BDL)	"	Simple Scroll	" "	
Bolt Handle – Plug	"	" "	" "	
Bolt Body	Damascene	Same as "C"	Same as "C"	
FINISH (Exterior)	Black except as shown below:			
Barrel	Special Polish	Same as "C"	Same as "C"	
Receiver	" "	" " "	" " "	
Trigger Guard	" "	" " "	" " "	
Floor Plate	" "	" " "	" " "	
Trigger Guard Screw	Standard	Special Polish	Special Polish	
Butt Plate Screw	"	" "	" "	
Safety	"	" "	" "	
Firing Pin Head	Sating Chrome	Same as "C"	Same as "C"	
Bolt Body	Damascene	Same as "C"	Same as "C"	
Bolt Head	Special Polish	Same as "C"	Same as "C"	
Bolt Handle	" "	" " "	" " "	
Bolt Plug	" "	" " "	" " "	

(1) Removed C Grade 22 Cal. See new listing 40–XB Rim Fire Sporter.

RD-6489

BARBER - PRESALE R 0129661
R2530649

CONFIDENTIAL-SUBJECT TO PROTECTIVE ORDER
KINZER V. REMINGTON

BARBER - PRESALE R 0129662

9-19-68
REVISED 11-11-70

REMINGTON STANDARDS - ARMS

MODEL 700 Custom	C Grade	D Grade	F Grade	(1)
MARKINGS (C-15360				
Barrel	Cal. Stamp Only	Same as "C"	Same as "C"	
Proof, Etc.	Visible	Not Visible	Not Visible	
Receiver	Standard 700	Same as "C"	Same as "C"	
OPEN SIGHTS	Optional	Same as "C"	Same as "C"	
PARKING	Cloth Case	Same as "C"	Protector–Caddy	
Outer Carton	Standard	" " "	Special	
STOCK (Floor Plate)	Blind Mag. Opt.	Same as "C"	Same as "C"	
Bedding	Hand	" " "	" " "	
Finish (Rubbed)	RK–W	" " "	" " "	
Oil – Optional	Added Cost	No Charge	No Charge	
Grain	Fancy	Fancy No.4	Full Fance No. 6	
Checker	Hand	Same as "C"	Same as "C"	
Pattern (See Photos)	Skip–line	"D"	"F"	
Pitch	20	22	22	
Grip Cap	Rosewood (India)*	Same as "C"	Same as "C"	
White Spacer	Yes (Opt. w/6)	" " "	" " "	
Butt Plate (Plastic)	Black	" " "	" " "	
White Spacer	Yes (Opt.w/6)	" " "	" " "	
Nameplate	None	" " "	Gold	
Recoil Pad	Use Pachmayr – Presentation type for Magnum orders			
Reinforcing Bolt	Rosewood Plug (2)	Same as "C"	Same as "C"	
Fore–End Tip	Rosewood (India) (Opt.w/6)*	" " "	" " "	
White Spacer	Yes (Opt.w/6)	" " "	" " "	
Fore-End Length (from bbl. Bracket)	1" or 10" (dep. on bbl length)	" " "	" " "	
Swivels (7/8") Q'D.	Yes	" " "	" " "	
Left Hand Cheekpiece	Optional (added cost)	Optional	Optional	
SLING STRAP	No	Same as "C"	Same as "C"	
TEST	Rigid	Same as "C"	Same as "C"	

*Steel Grip Cap (Black) is supplied when no Fore–End Tip is requested. w/o white spacer means all (3) places unless place specified.
(1) Remove C grade 22Cal. See new listing 40-XB Rim Fire Sporter.

RD-6489

BARBER - PRESALE R 0129662
R2530650

CONFIDENTIAL-SUBJECT TO PROTECTIVE ORDER
KINZER V. REMINGTON

3-14-78

3/23/77
REVISED

REMINGTON STANDARDS - ARMS

BARBER - PRESALE R 0129663

MODEL 700 Custom		C Grade
	Same as BDL Grade Specifications Except as indicated below:	
ACCURACY		Specially Selected at gallery
ASSEMBLY – Action		Smooth Working
All Parts (Selection)		Custom Assemble
All Screws		Not Qualified
BARREL		Std. 700
Length (1)		20", 22", 24" Depending on Caliber
Sight Holes (2)		Customer Option
CALIBERS (3)	All Calibers in BDL Grade except 17 Rem., 223 Rem., 375 H&H Mag. and 458 Win. Mag.	
FINISH (Exterior)	Black except as shown below:	
Barrel		Special Polish
Receiver		" "
Trigger Guard		" "
Floor Plate		" "
Trigger Guard Screw		Standard
Recoil Pad Screw		"
Safety		"
Firing Pin Head		Satin Chrome
Bolt Body		Damascene
Bolt Head		Special Polish
Bolt Handle		" "
Bolt Plug		" "

(1) Added 20"
(2) Added
(3) Added 223 Rem., 375 H&H Mag.

BARBER - PRESALE R 0129663
R2530651

CONFIDENTIAL-SUBJECT TO PROTECTIVE ORDER
KINZER V. REMINGTON

BARBER - PRESALE R 0129664

5/23/77
3-14-78
REVISED

REMINGTON STANDARDS - ARMS

BARBER - PRESALE R 0129664

MODEL 700 Custom		C Grade
MARKINGS (C-15360)		
Barrel		Std. 700
Proof. Etc.		Visible
Receiver		Std. 700
OPEN SIGHTS		See Packing
PACKING		Cloth Case
Outer Carton		Standard
		Sights packed in cloth bag
STOCK		
Bedding		Hand
Finish		RK–W or Satin Finish
Grain		Fancy
Checker		Cut
(2) Pattern (See Photos)		Full or Skipline
Pitch		20
Grip Cap		Rosewood (India)
(3) White Spacer		Optional
Recoil Pad	Use Pachmayr	– Presentation type
Brown Spacer		
Reinforcing Screw		Rosewood Plug (2)
Fore–End Tip		Rosewood (India)
(3) White Spacer		Optional
(1) Fore–End Length (from Bbl. Bracket)		11" or 10" (Dep. on Bbl. Length)
Studs		Yes
Left Hand Cheekpiece		Optional (Added cost)
SLING STRAP		No
TEST		Rigid

(1) Error on previous transmittal. was 1" or 10"
(2) Was BDL
(3) Was Standard

R2530652

CONFIDENTIAL-SUBJECT TO PROTECTIVE ORDER
KINZER V. REMINGTON

BARBER - PRESALE R 0129665

5-7-81
REVISED 7–24–79

REMINGTON STANDARDS - ARMS

MODEL 700 Classic

Same as BDL Grade Except:	
(1) BARREL	No Sight Holes
CALIBERS	22-250
	6mm
	243
	30-06
	270
	7mm Rem. Mag.
(3)	7mm Mauser (7 x 57)
RECOIL PAD	
(Std. Calibers)	Presentation Type – Brown with black backer.
(7mm Rem. Mag.)	Same as used on Std. 700 except Brown with black backer.
STOCK (Assembly)	
Butt Plate	No
Cheekpiece	No
Checkering	Machine cut – 20 lines / in
Fore-end Tip	No
Finish	Vinyl
Grip Cap	No
Recoil Pad	Yes (See Recoil Pad)
Swivel Studs	No
(2) Drop at Comb	1 - 5/8"
(2) Drop at Heel	2"

(1) Added Barrel
(2) Added Drops
(3) Added

RD-6489

BARBER - PRESALE R 0129665
R2530653

CONFIDENTIAL-SUBJECT TO PROTECTIVE ORDER
KINZER V. REMINGTON

BARBER - PRESALE R 0129666

MODEL 700 Classic

Same as BDL Grade Except:	
(1) BARREL	No Sight Holes
CALIBERS	22-250
	6mm
	243
	30-06
	270
	7mm Rem. Mag.
RECOIL PAD	
(Std. Calibers)	Presentation Type – Brown with black backer.
(7mm Rem. Mag.)	Same as used on Std. 700 except Brown with black backer.
STOCK (Assembly)	
Butt Plate	No
Cheekpiece	No
Checkering	Machine cut –20 lines / in
Fore-end Tip	No
Finish	Vinyl
Grip Cap	No
Recoil Pad	Yes (See Recoil Pad)
Swivel Studs	No
(2) Drop at Comb	1 - 5/8"
(2) Drop at Heel	2"

(1) Added Barrel
(2) Added Drops

BARBER - PRESALE R 0129666
R2530654

MODEL 700 LEFT HAND

CONFIDENTIAL-SUBJECT TO PROTECTIVE ORDER
KINZER V. REMINGTON

BARBER - PRESALE R 0129668

Original : 3-30-72
REVISED

REMINGTON STANDARDS - ARMS

MODEL 700 Left Hand

SAME AS RIGHT HAND EXCEPT: BDL Grade only See Below:	
ACTION:	Left Hand Operation
BARREL:	
Calibers	7mm Rem. Mag.
	270 Win.
	30–06
BOLT:	Left Hand
MARKINGS – RECEIVER	(C-90552)
Remington Script:	Right Center
Model Number:	Below Script
Serial Number:	Right Front
Safety "F" & "S":	Adjacent to Left Side Safety
PACKAGING:	
RECEIVER:	Left Hand Ejection Port.
Markings:	See MARKINGS – RECEIVER.
SAFETY:	Left Side
STOCK ASSEMBLY:	Left Side Bolt and Receiver Opening.

RD-5439

BARBER - PRESALE R 0129668
R2530656

M/766 T.H.

CONFIDENTIAL-SUBJECT TO PROTECTIVE ORDER
KINZER V. REMINGTON

BARBER - PRESALE R 0129670

Original : 3-30-72

REVISED

REMINGTON STANDARDS - ARMS

MODEL 700 Left Hand

SAME AS RIGHT HAND EXCEPT: BDL Grade only See Below:	
ACTION:	Left Hand Operation
BARREL:	
Calibers	7mm Rem. Mag.
	270 Win.
	30–06
BOLT:	Left Hand
MARKINGS – RECEIVER	(C-90552)
Remington Script:	Right Center
Model Number:	Below Script
Serial Number:	Right Front
Safety "F" & "S":	Adjacent to Left Side Safety
PACKAGING:	
RECEIVER:	Left Hand Ejection Port.
Markings:	See MARKINGS – RECEIVER.
SAFETY:	Left Side
STOCK ASSEMBLY:	Left Side Bolt and Receiver Opening.

RD-6489

BARBER - PRESALE R 0129670
R2530658