THIS DRAWING OR INFORMATION IS PROPRIETARY INFORMATION OF THE REMINGTON ARMS COMPANY, INC.

DO NOT SCALE THIS DRAWING: WORK TO FIGURES UNLESS OTHERWISE NOTED.
TOLERANCES ON DECIMAL DIMENSIONS ARE:
1 PLACE (0.1) - TOLERANCE ± 0.015
2 PLACE (0.01) - TOLERANCE ± 0.010
3 PLACE (0.001) - TOLERANCE ± 0.005
& ON FRACTIONAL DIMENSIONS ± 1/64
& ON ANGULAR DIMENSIONS ± 0.5°
FINISHES ARE DESIGNATED BY ROOT MEAN SQUARE (R.M.S.) MICRO-INCH ROUGHNESS VALUES AND ARE THE MAXIMUM ROUGHNESS ACCEPTABLE. UNLESS OTHERWISE SPECIFIED. FINISH ROUGHNESS TO BE #error: broken link OR BETTER.
DIMENSIONS AND TOLERANCES ARE IN ACCORDANCE WITH ASME Y14.5 1994.

MATERIAL AND HEAT TREAT

MATERIAL : MIM-4140 RCT.

HEAT TREAT : CARBURIZE 0.7% C.P.

HARDNESS : HR15n 85-90; 0.008 MIN. EFF. CASE

FINISH : SEE NOTES

HEAT TREAT AND FINISH TO BE DONE BY REMINGTON

ALTERATIONS					
ALT.	ZONE	WAS	REF.	BY	DATE

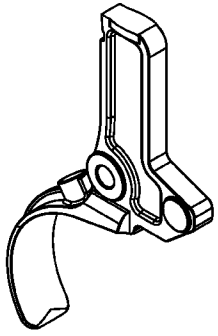

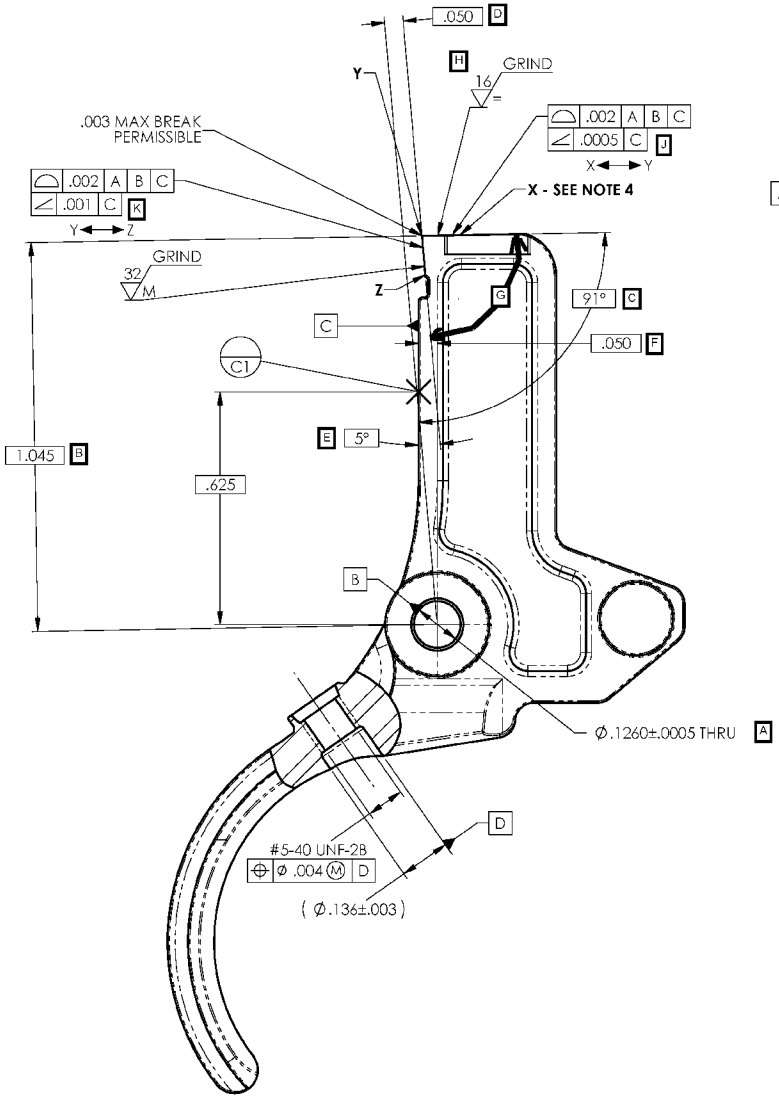

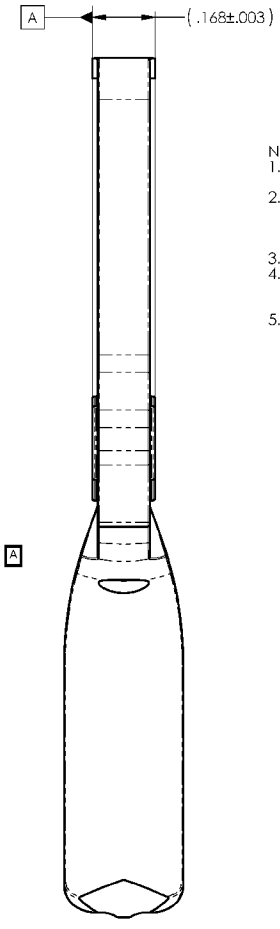

NOTES:
1. ALL MACHINING TO BE DONE PRIOR TO PLATING. PROTECT SHARP EDGE TO PREVENT DAMAGE PRIOR TO AND DURING PLATING.
2. DUPLEX COATING, 0.0002"-0.0003" HIGH PHOSPHOROUS ELECTROLESS NICKEL PLATE, UNDER 0.00005"-0.00015" CO-DEPOSITED MEDIUM PHOSPHORUS ELECTROLESS NICKEL PLATE WITH PTFE (TEFLON). ALL COMPONENTS BAKED @ 375°F FOR 24 HOURS.
3. FOR DIMENSIONS NOT SHOWN, SEE E-301462.
4. POINT X FOR THE PROFILE AND ANGULARITY TOLERANCE ZONE ON THE TOP SURFACE OF THE TRIGGER IS LOCATED .100 ALONG THE SURFACE FROM POINT Y AT THE SHARP EDGE.
5. SURFACE FINISH IS TO BE MEASURED WITH A 10 MICRON PROFILOMETER TIP.

	301463	TRIGGER
MODEL	PART NO.	PART USE
DES. BY DATE JWR 12-16-05	DRN. BY DATE JWR 01-10-06	CHK. BY DATE
TITLE TRIGGER		
SHEET SIZE C	NUMBER 301463	SCALE 4X / SUPERSEDES / REFERENCE
		REMINGTON ARMS CO., INC. Madison, NC 27025

SolidWorks File: 301463 - Trigger

NOT RELEASED FOR PRODUCTION