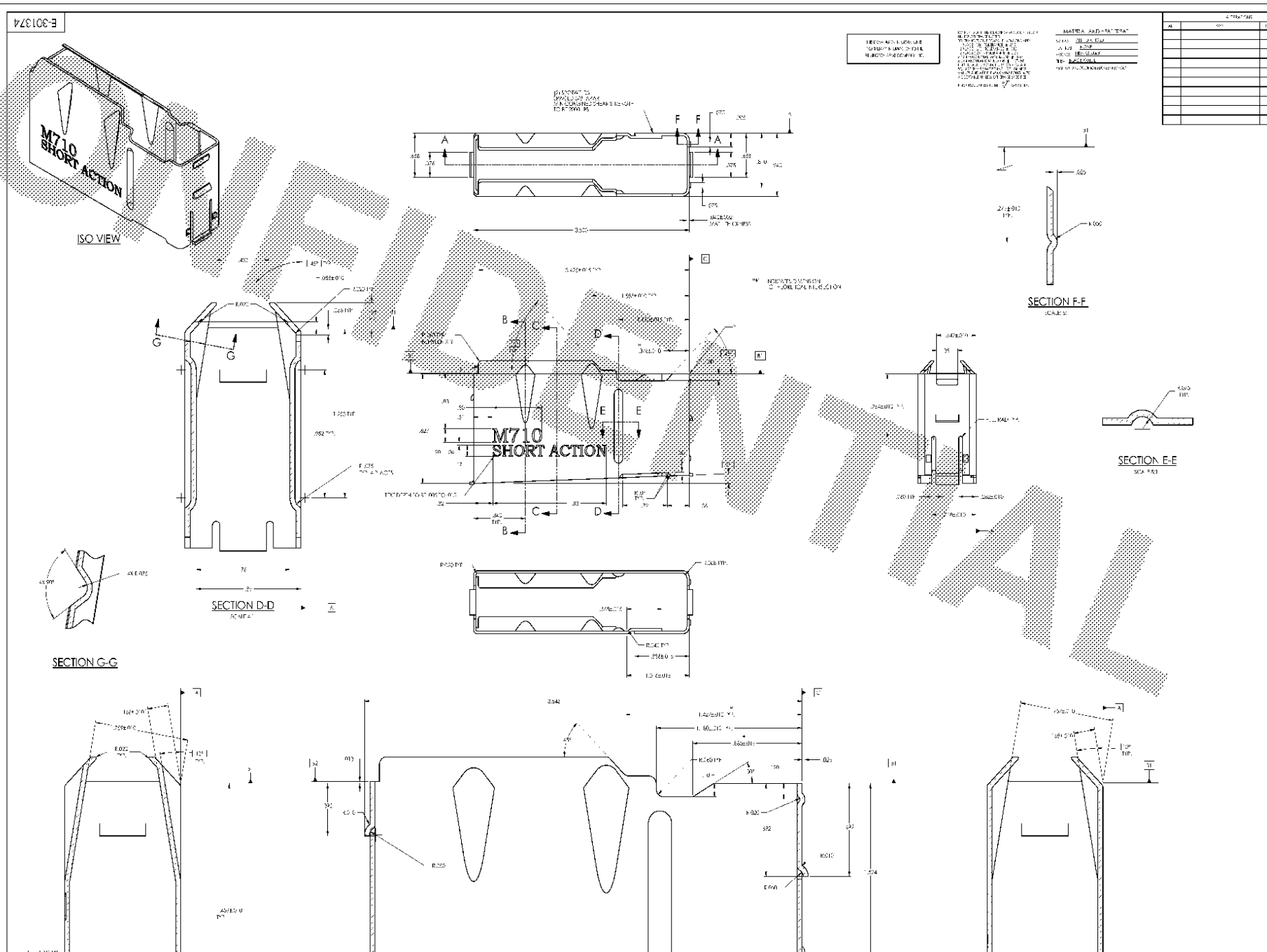

CONFIDENTIAL

Subject to Protective Order - Williams v. Remington