CONFIDENTIAL

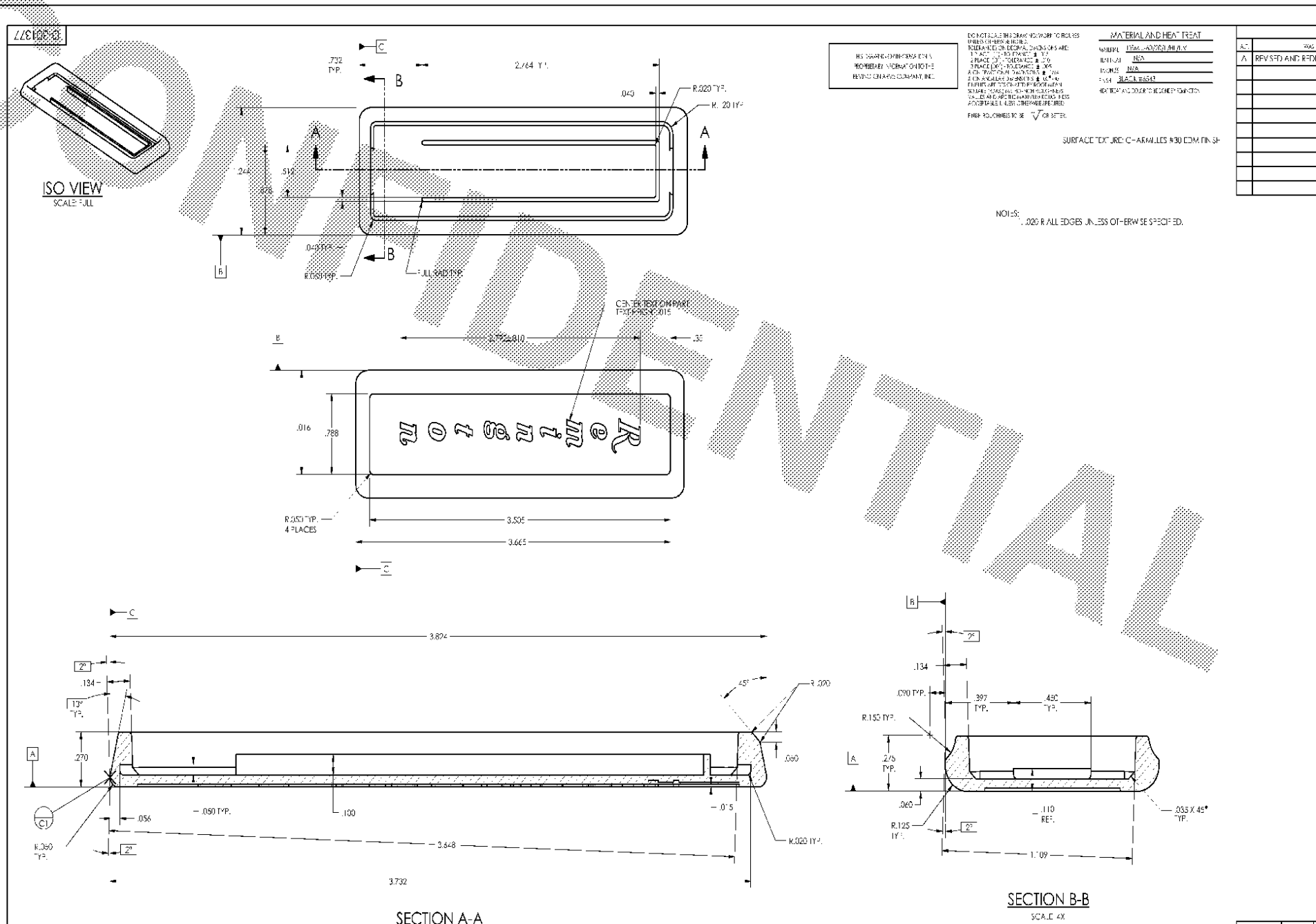

Subject to Protective Order - Williams v. Remington