Subject to Protective Order - Williams v. Remington

CONFIDENTIAL

ILE0006075

D 306380

RELEASED FOR PRE-PRODUCTION ONLY

NOTES:

1. DIMENSIONS SHOWN WITH THIS SYMBOL WILL BE SUBJECT TO CONTROL AND INSPECTION AS SPECIFIED IN THE PROCESS RECORD OR FUNCTIONAL PARTS INSPECTION DOCUMENTATION.
2. DIMENSION SHOWN WITH THIS SYMBOL ARE SIGNIFICANT AND MUST HAVE CPK VALUES GREATER THAN 1.33.
3. FOR VALUES DOCUMENTED IN ALL SAMPLE SURVEYS GENERATED SUBMITTED IN ACCORDANCE TO THE PUBLICATION "PRODUCTION PART APPROVAL PROCESS" AS PUBLISHED BY THE AUTOMOTIVE INDUSTRY ACTION GROUP (AIAG) "PPAP" 3
4. ALL GEOMETRIC TOLERANCES AND GAGE DIMENSIONS APPLY INSPECTION FOR CONFORMANCE

THE DRAWING OR INFORMATION HOWEVER ARE THE SOLE PROPERTY OF REMINGTON ARMS COMPANY, INC.

DO NOT SCALE THE DRAWING. WORK TO FIGURES UNLESS OTHERWISE NOTED.
TOLERANCES ON DIMENSIONAL DRAWINGS ARE:
1 PLACE (0.0) TOLERANCE ±0.015
2 PLACE (0.00) TOLERANCE ±0.010
3 PLACE (0.000) TOLERANCE ±0.005
& ON ANGULAR DIMENSIONS ±1/2°
& ON ANGULAR DIMENSIONS ±1/2°
FINISH: AREA DESIGNATED BY FRONT VIEW SQUARE IS 125 MICRO INCHES ROUGHNESS VALUE AND ARE THE MAXIMUM ROUGHNESS ACCEPTABLE. UNLESS OTHERWISE SPECIFIED

FINISH ROUGHNESS TO BE √ OR BETTER.

DIMENSIONS AND TOLERANCES ARE IN ACCORDANCE WITH ASME Y14.5-1994.

MATERIAL AND HEAT TREAT

MATERIAL	SEE COMPONENT DRAWINGS
HEAT TREAT	NONE
HARDNESS	N/A
FINISH	SEE NOTES

HEAT TREAT AND FINISH TO BE PER REVISION

SYM.	WAS
PA	RELEASED FOR PRE-PRO
PB	REVISED TABLE
PC	MODIFIED NOTES 2 AN
PD	REMOVED NOTES 4 AN

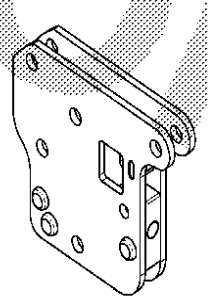

NOTES:
1. ASSEMBLY TO BE PLATED WITH ECO02" 0.0034" HIGH PHOSPHORUS ELECTROLESS NICKEL.
2. ALL COMPONENTS SHOT FINISHED AND BAKED AT 375°F FOR 24 HOURS.
3. DIMENSIONAL TOLERANCING.
4. ALL DRILLED AND TAPPED HOLES TO BE DEBURRED.

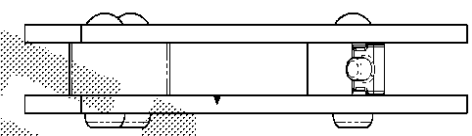
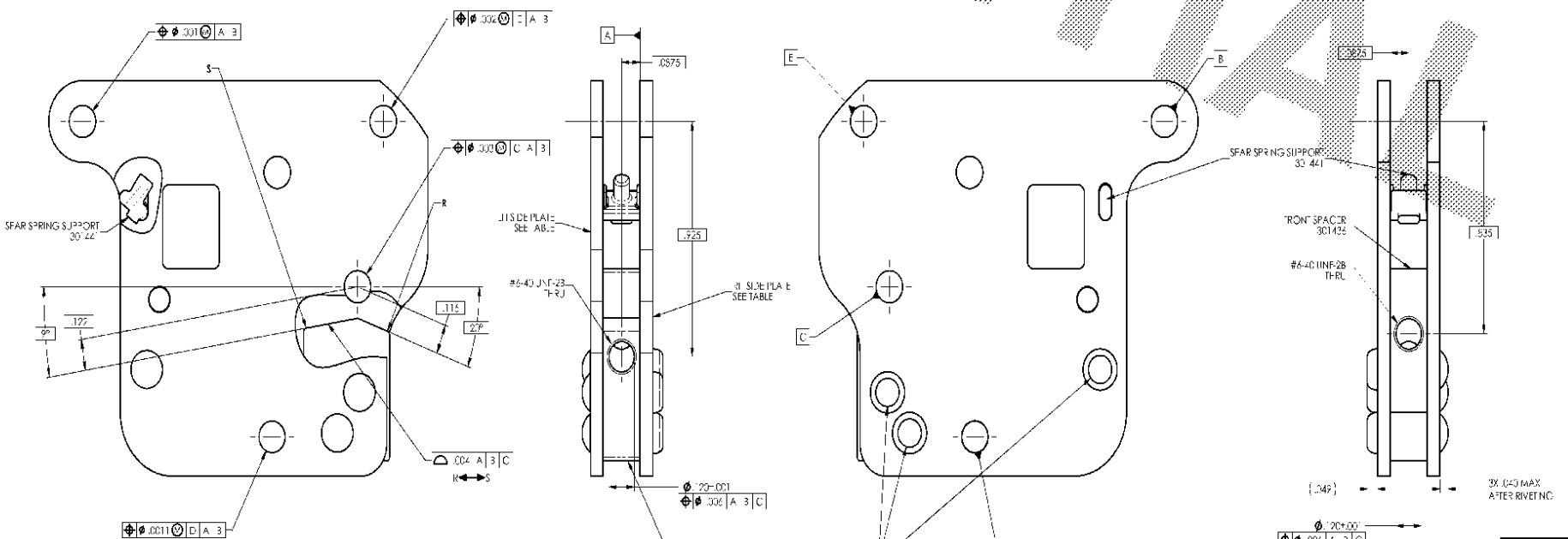
ASSEMBLY NUMBER	DESCRIPTION	RH SIDE PLATE PART NUMBER	LH SIDE PLATE PART NUMBER
306380	TRIGGER HOUSING - RH	301442	301435
306381	TRIGGER HOUSING - LH	301435	301442