UPC

0 47700 25705 1

C66665844

CONFIDENTIAL-SUBJECT TO PROTECTIVE ORDER
KINZER V. REMINGTON

ORDER NO.	25705
BARREL LENGTH	24"
CAPACITY *	6

*INCLUDES 1 IN CHAMBER

M2400043951

Do Not Use

Remington®

VERY IMPORTANT: Instruction Book enclosed to assure safe use of this firearm.

MODEL 700™ M24
BOLT ACTION CENTERFIRE RIFLE
24" BARREL 7.62 NATO 6*

46

SERIAL NO. C6665844

ORDER NO. 25705

Reg. U.S. Pat & Tm. Off. Marca Registrada Marque Deposee.

5705 C6665844

26PR

Do Not Use

ORDER 25705

MODEL 700™ M24

UPC

0 47700 25705 1

ORDER 25705

MODEL 700™ M24

UPC

0 47700 25705 1

SERIAL NO.

C6665844

CONFIDENTIAL-SUBJECT TO PROTECTIVE ORDER
KINZER V. REMINGTON

M2400043953

MODEL 700™ M24
BOLT ACTION CENTERFIRE RIFLE
24" BARREL 7.62 NATO 6*

GREEN ENVELOPE CONTAING:
- INSTUCTION BOOK
- PRODUCT OWNER'S CARD
- MUSEUM/COUNTRY STORE FLIER
- REMINGTON AUTHORIZED GUNSMITHS

proof of purchase

0 47700 25705 1

06665844

owner registration sticker

0 47700 25705 1

06665844

46 FORM

ISRAELI GUNS IS-B-YLS

GUN SERIAL # C6665844

OP. #	OP. NAME	READINGS	DATE	INITIA
575 & 580	Assemble Action and Stock			
600	Proof			
607	Check Headspace			
610	Dis-assemble Gun			
612	Magnaflux Barrel Action			
	Magnaflux Bolt			
615	Rollmark Caliber			
617	Drill and Tap Sight Holes		3/19/97	WJT
618	Polish Barrel		3/19/97	WJT
620	Apply Coatings (Barrel Action)			
	Apply Coating (Bolt)			
625	Final Assembly A) Clean inside of Bolt Assembly			
	B) Inspect Rear Firing Pin Hole for Chamfer in Bolt Head			
	C) Inspect Ejector Hole for Chamfer			
	D) Oil Firing Pin Ass'y			
	E) Adjust Trigger Pull to Min Setting and Stake			

OP. #	OP. NAME	READINGS	DATE	INITIAL
625 CONT.	F) SAFETY ON FORCE	5 5 5	5-20-97	JW
	G) SAFETY OFF FORCE	3.5 3 3	5-20-97	JW
	H) TRIGGER PULL TEST & RETAINABILITY			
	I) FIRING PIN INDENT	23.5 23.5 23.5	5-20-97	JW
	J) ASSEMBLE STOCK		5/15/97	RP
	K) ASSEMBLE SWIVEL STUDS		6-24-97	RP
	L) ATTACH FRONT AND REAR SIGHT ASSEMBLIES		6-5-97	RP
	M) IRON SIGHT ALIGNMENT		6-5-97	RP
	N) DETACH FRONT AND REAR SIGHTS AND PLACE IN NUMBERER CONTAINER		6-5-97	RP
640	GALLARY TEST AND TARGET	Right 85 Left 65	6-18-97	JW
	A) MALFUNCTIONS		6-18-97	JW
	B) PIERCED PRIMERS		6-18-97	JW
645	INSPECT FOR LIVE AMMO		6-18-97	DR
655	FINAL INSPECTION A) HEADSPACE		6-24-97	RP
	B) TRIGGER PULL	2.37 2.46 2.45 2.41 2.51	6-23-97	CK
	FUNCTION		6-24-97	RP
660	PACK			

CONFIDENTIAL-SUBJECT TO PROTECTIVE ORDER
KINZER V. REMINGTON

M2400043956

Remington Test Lab, Ilion, N.Y.

Centroidal distance calculations for Rifle # C6665844
18 Jun 1997

THE AVERAGE X-COORDINATE FOR THIS RIFLE IS: -.105333
THE AVERAGE Y-COORDINATE FOR THIS RIFLE IS: -.423667
THE RESULTING AVERAGE POI RADIUS FOR THIS RIFLE IS: .436564

THE AMR FOR THIS RIFLE IS: 1.208

CENTROIDAL DISTANCES

0	TO	1	.577014
1	TO	2	.638205
1	TO	3	.348036

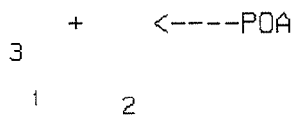

REMINGTON CENTERFIRE ACCURACY TEST REMINGTON TEST LAB, ILION, N.Y.

PATTERN #: 1

POA TO CENTROID:	.577
MIN RADIUS :	.570
MEAN RADIUS :	1.444
MAX RADIUS :	2.384
CENTROID X :	-.268
CENTROID Y :	-.511

18 Jun 1997 FILE:/Hpbasic/Accuracy/Patterning/Centerfire_Patt/C6665844

CENTERFIRE PATTERN # 1

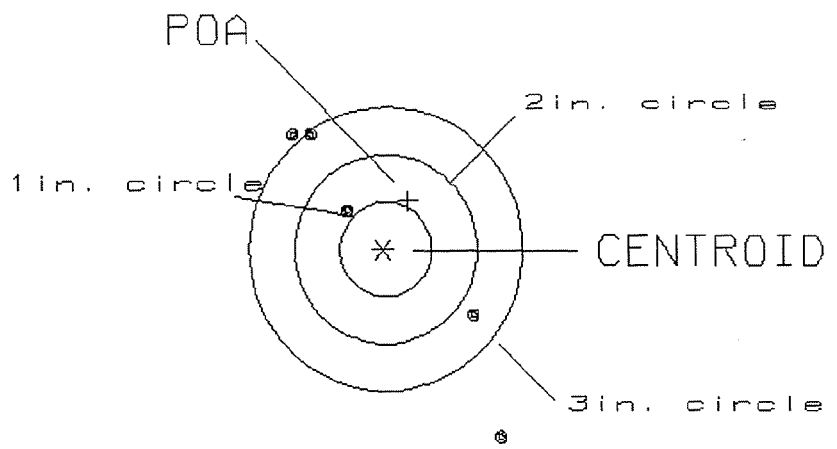

# OF SHOTS= 5	# IN CIRCLE
HS= 2.31	0
VS= 3.23	1
GS= 3.97	3

REMINGTON CENTERFIRE ACCURACY TEST REMINGTON TEST LAB, ILION, N.Y.

PATTERN #: 2

POA TO CENTROID:	.674
MIN RADIUS :	.974
MEAN RADIUS :	1.146
MAX RADIUS :	1.336
CENTROID X :	.368
CENTROID Y :	-.564

18 Jun 1997 FILE:/Hpbasic/Accuracy/Patterning/Centerfire_Patt/C6665844

CENTERFIRE PATTERN # 2

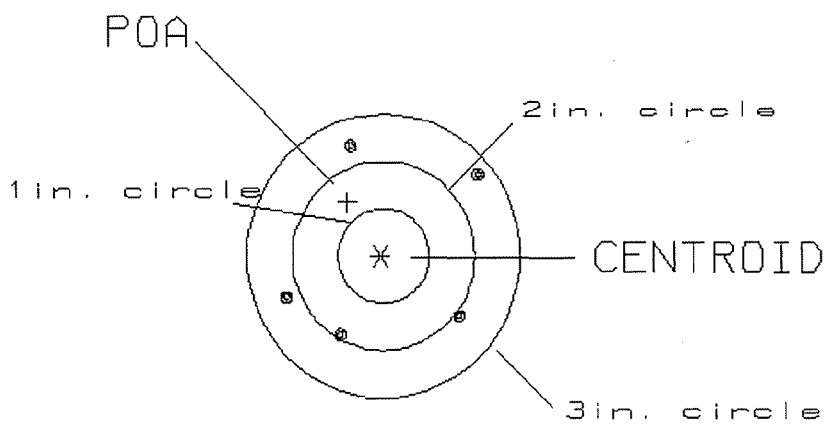

OF SHOTS= 5 # IN CIRCLE

HS=	2.13	0
VS=	2.05	1
GS=	2.50	5

REMINGTON CENTERFIRE ACCURACY TEST REMINGTON TEST LAB, ILION, N.Y.

PATTERN #: 3

POA TO CENTROID:	.460
MIN RADIUS :	.765
MEAN RADIUS :	1.033
MAX RADIUS :	1.649
CENTROID X :	-.416
CENTROID Y :	-.196

18 Jun 1997 FILE:/Hpbasic/Accuracy/Patterning/Centerfire_Patt/C6665844

CENTERFIRE PATTERN # 3

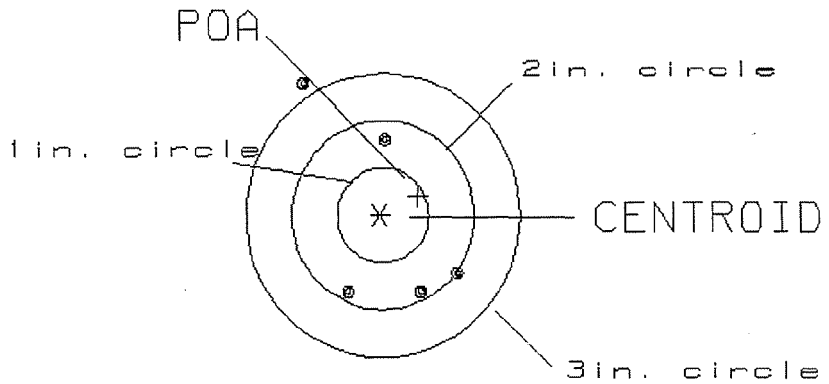

# OF SHOTS= 5	# IN CIRCLE
HS= 1.70	0
VS= 2.19	4
GS= 2.61	4

SWS TRIGGER PULL TEST

AVERAGE PULL FORCE BETWEEN
INITIAL & CYCLE TESTS
2.50# ± .50#
3.00# ± .75#
4.00# ±1.00#

SERIAL NO. C6665844

DATE 5-8-97

TESTER EK

	2.50# INITIAL	2.50# AFTER 50 CYCLES	FINAL TEST & TO RESET 2.50#		COMMENTS
PULL #1	2.64	2.62	2.61		MIN. SETTING,
PULL #2	2.67	2.54	2.66		NO AVG. OF 5
PULL #3	2.70	2.70	2.63		READINGS ACCEPT-
PULL #4	2.63	2.59	2.64		ABLE LESS THAN 2#
PULL #5	2.71	2.63	2.62		
TOTAL	13.35	13.08	13.16		
AVG.	2.67	2.62	2.63		

	3.00# INITIAL	3.00# AFTER 20 CYCLES		COMMENTS
PULL #1	3.05	2.96		
PULL #2	2.86	2.92		
PULL #3	2.87	2.92		
PULL #4	2.99	2.91		
PULL #5	2.99	2.93		
TOTAL	14.76	14.64		
AVG.	2.95	2.93		

	4.00# INITIAL	4.00# AFTER 20 CYCLES	MAX SETTING GREATER THAN 4#	RESET TO 4# FOR TARGET & ACCURACY
PULL #1	3.92	3.92		4.09
PULL #2	3.84	3.95		4.14
PULL #3	3.95	3.90		4.21
PULL #4	3.71	3.98		4.17
PULL #5	3.87	3.95		4.18
TOTAL	19.29	19.70		20.79
AVG.	3.86	3.94		4.16